N62661.AR.002624
NS NEWPORT
5090.3a

FINAL TECHNICAL MEMORANDUM SUPPLEMENTAL REMEDIAL INVESTIGATION FOR SITE 8 NETC NEWPORT RI

10/1/2011

TETRA TECH

Technical Memorandum Supplemental Remedial Investigation

for

Site 08, Naval Undersea Systems Center (NUSC) Disposal Area

Naval Station Newport, Rhode Island

Naval Facilities Engineering Command Mid-Atlantic

Contract Number N62470-08-D-1001
Contract Task Order WE19

October 2011

W5210693F

TECHNICAL MEMORANDUM
SUPPLEMENTAL REMEDIAL INVESTIGATION

FOR

SITE 08, NAVAL UNDERSEA SYSTEMS CENTER (NUSC) DISPOSAL AREA

NAVAL STATION NEWPORT, RHODE ISLAND

COMPREHENSIVE LONG-TERM ENVIRONMENTAL ACTION NAVY (CLEAN) CONTRACT

Submitted to:
Naval Facilities Engineering Command Mid-Atlantic
9742 Maryland Avenue
Norfolk, Virginia 23511-3095

Submitted by:
Tetra Tech NUS, Inc.
234 Mall Boulevard, Suite 260
King of Prussia, Pennsylvania 19406

CONTRACT NUMBER N62470-08-D-1001
CONTRACT TASK ORDER WE19

OCTOBER 2011

PREPARED UNDER THE DIRECTION OF:

JAMES ROPP, P.E.
PROJECT MANAGER
TETRA TECH
WILMINGTON, MASSACHUSETTS

APPROVED FOR SUBMISSION BY:

JOHN J. TREPANOWSKI, P.E.
PROGRAM MANAGER
TETRA TECH
KING OF PRUSSIA, PENNSYLVANIA

TABLE OF CONTENTS

SECTION		PAGE
1.0	**INTRODUCTION AND OBJECTIVES**	**1-1**
2.0	**STUDY AREA INVESTIGATIONS**	**2-1**
2.1	SOIL SAMPLING	2-1
2.2	BEDROCK DRILLING	2-3
2.3	BOREHOLE GEOPHYSICS	2-3
2.4	CONSTRUCTION OF MONITORING WELLS	2-4
2.5	GROUNDWATER SAMPLING	2-5
2.5.1	Groundwater Sampling – Existing Monitoring Wells and PDB Locations	2-6
2.5.2	Groundwater Sampling – New Locations	2-7
2.5.3	Groundwater Sampling from DPT Boring	2-8
2.6	SEDIMENT AND SURFACE WATER SAMPLING	2-9
3.0	**ANALYTICAL RESULTS**	**3-1**
3.1	NORTH MEADOW INVESTIGATION	3-1
3.1.1	North Meadow – Groundwater	3-2
3.1.2	North Meadow – Soil	3-3
3.2	BUILDING 179 AREA INVESTIGATION	3-3
3.2.1	Building 179 Area – Groundwater	3-3
3.2.2	Building 179 Area – Soil	3-5
3.2.3	Building 179 Area – Surface Water and Sediment	3-7
3.3	BUILDING 185 COMPLEX INVESTIGATION	3-7
3.3.1	Building 185 Complex – Soil	3-7
3.3.2	Building 185 Complex – Groundwater	3-8
3.4	ADDITIONAL GROUNDWATER SAMPLING BETWEEN BUILDING 185 AND NORTH MEADOW	3-8
3.5	1,4-DIOXANE CHARACTERIZATION	3-10
3.6	OTTO FUEL CHARACTERIZATION	3-11
4.0	**SCREENING LEVEL HUMAN HEALTH RISK ASSESSMENT**	**4-1**
4.1	DERIVATION OF SCREENING CRITERIA	4-1
4.2	SELECTION OF COPCS	4-2
4.3	COMPARISON OF CONCENTRATIONS TO EXPOSURE POINT CONCENTRATIONS USED IN THE HUMAN HEALTH RISK ASSESSMENT	4-6
4.4	UPDATED TOXICITY CRITERIA FOR 1,4-DIOXANE	4-9
4.5	SUMMARY	4-9
5.0	**ECOLOGICAL RISK ASSESSMENT RE-EVALUATION**	**5-1**
5.1	SEDIMENT	5-1
5.2	SURFACE SOIL	5-2
5.3	EPA RISK UPDATE SUMMARY AND CONCLUSION	5-3
6.0	**SUMMARY AND CONCLUSIONS**	**6-1**
6.1	NORTH MEADOW VOC PLUME	6-1
6.2	BUILDING 179 CUST AREA	6-2
6.3	BUILDING 185 COMPLEX	6-2
6.4	RISK ASSESSMENTS	6-3
6.5	REFINEMENT OF COPCS	6-4

TABLE OF CONTENTS (continued)

TABLES

NUMBER

2-1 Groundwater Sampling Stabilization Record
3-1 Groundwater Elevation Summary
3-2 Groundwater Analytical Results
3-3 Surface Soil Analytical Results
3-4 Subsurface Soil Analytical Results
3-5 Surface Water Analytical Results
3-6 Sediment Analytical Results
4-1 EPA Risk Screening Criteria and State Remediation Criteria for Soil and Sediment
4-2 EPA Risk Screening Criteria and State Remediation Objectives for Groundwater
4-3 Occurrence, Distribution, and Selection of Chemical of Potential Concern – Direct Contact with Surface Soil
4-4 Occurrence, Distribution, and Selection of Chemicals of Potential Concern – Direct Contact with Subsurface Soil
4-5 Occurrence, Distribution, and Selection of Chemicals of Potential Concern – Direct Contact with Groundwater (Overburden-Bedrock Interface)
4-6 Occurrence, Distribution, and Selection of Chemicals of Potential Concern – Vapor Intrusion (Overburden-Bedrock Interface)
4-7 Occurrence, Distribution, and Selection of Chemicals of Potential Concern – Direct Contact with Groundwater (Bedrock)
4-8 Occurrence, Distribution, and Selection of Chemicals of Potential Concern – Vapor Intrusion (Bedrock)
4-9 Occurrence, Distribution, and Selection of Chemicals of Potential Concern – Direct Contact with Sediment
4-10 Chemicals Identified as COPCs from the SRI Data
4-11 Comparison of Surface Soil Concentrations
4-12 Comparison of Subsurface Soil Concentrations
4-13 Comparison of Groundwater Concentrations for Direct Contact Exposures
4-14 Comparison of Groundwater Concentrations for Vapor Intrusion
4-15 Comparison of Sediment Concentrations
4-16 Summary of Cancer Risks and Hazard Indices Present in the RI Report (Reasonable Maximum Exposures)
5-1 Sediment Statistics and Comparisons
5-2 Surface Soil Statistics and Comparisons
6-1 Refinement of Chemicals of Concern in Groundwater (Human Health)
6-2 Refinement of Chemicals of Concern in Soil (Human Health)
6-3 Refinement of Chemicals of Concern in Sediment (Human Health)
6-4 Refinement of Chemicals of Concern in Fish Tissue (Human Health)
6-5 Refinement of Chemicals of Concern in Sediment (Ecological)
6-6 Summary of COCs Retained for the FS

TABLE OF CONTENTS (continued)

FIGURES

NUMBER

1-1 NUSC Disposal Area, Site Location
2-1 Sample Locations: Wells, Diffusion Bags, and Surface Water/Sediment
3-1 Potentiometric Surface Elevation Contours – August 5, 2010
3-2 Trichloroethene in Groundwater
3-3 1,1-Dichloroethene in Groundwater
3-4 1,1,1-Trichloroethane in Groundwater
3-5 Tetrachloroethene in Groundwater
3-6 1,4-Dioxane in Groundwater
3-7 1,1-Dichloroethane in Groundwater
3-8 Soil Boring Locations and Post-Excavation Soil Samples: Building 179 CUST and Interceptor Tank
3-9 Soil Boring Locations at the Building 185 Complex
4-1 Soil Classification
6-1 Cross-Sectional View of TCE Plume in the North Meadow
6-2 Cross-Sectional View of 1,1,1-TCA Plume near Building 179

ATTACHMENTS

A Boring Logs and Well Completion Reports
B Borehole Geophysical Services Report
C Field Logs
D Laboratory Reports and Data Validation Memoranda
E Historical Groundwater Data

ACRONYMS AND ABBREVIATIONS

ARAR	Applicable or Relevant and Appropriate Requirement
bgs	Below ground surface
CERCLA	Comprehensive Environmental Response and Compensation Liability Act
CLEAN	Comprehensive Long-Term Environmental Action Navy
COC	Chemicals of concern
COPC	Chemicals of potential concern
CSM	Conceptual site model
CTO	Contract Task Order
CUST	Concrete Underground Storage Tank
CVOC	Chlorinated volatile organic compound
DCA	1,1-dichloroethane
DEC	Direct Exposure Criteria
DO	Dissolved oxygen
DPT	Direct-push technology
ECO SL	Ecological Screening Level
EPA	Environmental Protection Agency
EPC	Exposure point concentration
ERA	Ecological risk assessment
eV	Electron volt
FS	Feasibility Study
gpm	Gallons per minute
HHRA	Human health risk assessment
HI	Hazard index
HQ	Hazard quotient
ILCR	Incremental lifetime cancer risk
IR	Installation Restoration
IV	Intervention Values
MCL	Maximum Contaminant Level
MEE	Methane/ethane/ethane
MHSPE	Ministry of Housing, Spatial Planning, and the Environment
NAVFAC	Naval Facilities Engineering Command
NAVSTA	Naval Station
Navy	U.S. Department of Navy
NOEC	No observable effect concentrations
NRWQC	National Recommended Water Quality Criteria

NUSC	Naval Undersea Systems Center
OU	Operable Unit
ORP	Oxidation-reduction potential
PAH	Polynuclear aromatic hydrocarbon
PAL	Project Action Limit
PCB	Polychlorinated biphenyl
PDB	Passive vapor diffusion bag
PGDN	1,2-Propylene glycol dinitrate
PID	Photoionization detector
PNNS	Phosphate/nitrate/nitrite/sulfate
POG	Protection of Groundwater
ppm	Parts per million
PRG	Preliminary Remediation Goal
PVC	Polyvinyl chloride
RCRA	Resource Conservation and Recovery Act
RI	Remedial Investigation
RIDEM	Rhode Island Department of Environmental Management
RSL	Regional Screening Level
SRI	Supplemental Remedial Investigation
SVOC	Semivolatile organic compound
TAL	Target Analyte List
TCE	Trichloroethene
TCL	Target Compound List
Tetra Tech	Tetra Tech, Inc
TOC	Total organic carbon
TPH	Total petroleum hydrocarbons
TV	Target value
UCL	Upper confidence limit
VOC	Volatile organic compound
µg/kg	Micrograms per kilogram
µg/L	Micrograms per liter

1.0 INTRODUCTION AND OBJECTIVES

This Supplemental Remedial Investigation (SRI) Report was prepared to describe additional investigations and data analysis performed as part of the ongoing Remedial Investigation and Feasibility Study (RI/FS) for the Naval Undersea Systems Center (NUSC) Disposal Area (Operable Unit [OU] 7 or Installation Restoration [IR] Site 08) at Naval Station (NAVSTA) Newport, Rhode Island (the Site). Figure 1-1 shows the location of the Site. The work has been performed by Tetra Tech, Inc. (Tetra Tech) under the Comprehensive Long-Term Environmental Action Navy (CLEAN) Contract No. N62470-08-D-1001, Contract Task Order (CTO) WE19, for the U.S. Department of Navy (Navy), Naval Facilities Engineering Command (NAVFAC) Mid-Atlantic.

During the RI effort in 2009 through 2010, it was determined that NUSC groundwater has been impacted by contamination associated with historical releases from the Building 179 Concrete Underground Storage Tank (CUST) Area, located hydraulically upgradient (south) of NUSC. This SRI was conducted to update and further characterize contamination associated with the Building 179 CUST Area and to fill data gaps to support the FS.

The objectives of the SRI are to:

- Further characterize the extent of the volatile organic compound (VOC) plume in the North Meadow.
- Further characterize the contamination beneath the Building 185 Complex.
- Provide new information regarding contamination associated with the Building 179 CUST Area.
- Assess 1,4-dioxane in groundwater.
- Further characterize the extent of propylene glycol dinitrate (PGDN), a component of Otto Fuel, in soil and groundwater at the Site.
- Determine if any of the SRI data indicate a revision is appropriate for the estimated risk to human health or ecological receptors at the Site, as determined during the RI (Tetra Tech, 2010a).
- Present the Comprehensive Environmental Response and Compensation Liability Act (CERCLA) chemicals of concern (COCs) to be carried through to the FS.

The SRI was performed in accordance with the *Work Plan Addendum, Supplemental Remedial Investigation for Site 08, Naval Undersea Systems Center (NUSC) Disposal Area, Naval Station Newport, Rhode Island* (Tetra Tech, 2010b). The work plan objectives were met during the SRI.

2.0 STUDY AREA INVESTIGATIONS

This section describes the field investigation activities performed during the SRI. Field activities were conducted from June through August 2010 in accordance with the Work Plan Addendum (Tetra Tech, 2010b). Sample locations are shown on Figure 2-1.

The following activities were completed during the SRI:

- Overburden drilling with soil sampling and analysis
- Sediment and surface water sampling and analysis
- Bedrock drilling
- Borehole geophysics
- Construction and development of monitoring wells
- Low-flow groundwater sampling and analysis
- Passive vapor diffusion bag (PDB) groundwater sampling and analysis
- Groundwater elevation measurements

Data from samples collected in 2003 during the Study Area Screening Evaluation (SASE) (Tetra Tech 2005) and in 2007-2008 during the RI are presented in the Remedial Investigation Report for Site 08, (Tetra Tech, 2010a), and are not published within this SRI Report.

2.1 SOIL SAMPLING

Continuous split-spoon soil sampling was performed throughout the overburden while advancing borings at four new monitoring well locations, MW-127B, MW-128B, MW-129B and MW-130B[1]. Jar-headspace screening of soil samples was performed in the field using a portable photoionization detector (PID). Soil samples were visually examined for evidence of staining, moisture, etc., and were described and logged using the Unified Soil Classification System (USCS). At locations MW-127B and MW-128B, two unsaturated soil samples per boring were selected for laboratory analysis of Target Compound List (TCL) VOCs, based on jar-headspace screening results and/or based on visual or olfactory evidence of contamination. A summary of jar-headspace readings for split-spoon soil samples selected for laboratory analysis from these four borings is presented in the table below.

[1] Site 8 monitoring wells designated with a "B" are screened in bedrock. Wells without the "B" designation are screened in either the overburden soil or the overburden/bedrock interface (exception: MW-01C is screened in bedrock).

Sample Location	Sample Depth[(1)] (feet below ground surface [bgs])	Jar-Headspace Screening PID Response[(2)] (parts per million [ppm])
MW-127B	0 – 2	0.0
	4 – 6	0.0
MW-128B	2 – 4	11.3
	4 – 6	13.2

(1) Soil samples were analyzed for TCL VOCs.
(2) PID – Photoionization Detector using a 10.6 electron volt (eV) bulb.

Continuous macro-core soil sampling was conducted at the eight direct-push technology (DPT) soil boring locations, B179-SB1, B179-SB2, B179-SB3, B185-A1-SB1, B185-A1-SB2, B185-A1-SB3, B185-A1-SB4, and B185-A3-SB1. As discussed above for split-spoon soil samples, similar jar-headspace screening, visual examination, and classification was performed for the macro-core soil samples. Soil samples selected for laboratory analysis were analyzed for TCL VOCs, TCL semivolatile organic compounds (SVOCs), TCL pesticides/polychlorinated biphenyls (PCBs), Target Analyte List (TAL) metals, and PGDN. During collection of soil samples for potential laboratory analysis, excluding the fractions for VOC analysis, the sample aliquot was homogenized in a stainless steel bowl and set aside, pending the selection of samples to be shipped for laboratory analysis. A summary of jar-headspace readings for macro-core soil samples selected from these eight DPT borings for laboratory analysis is presented below.

Sample Location	Sample Depth[(1)] (feet bgs)	Jar-Headspace Screening PID Response[(2)] (ppm)
B185A1-SB1	1-3	1.8
	7-8	21.8
B185A1-SB2	1-3	14.1
	3-5	4.1
B185A1-SB3	1-3	2.5
	3-5	1042[(3)]
B185A1-SB4	1-3	10.5
	5-7	0.5
B185A3-SB1	1-3	0.1
	3-5	0.1

Sample Location	Sample Depth[1] (feet bgs)	Jar-Headspace Screening PID Response[2] (ppm)
B179-SB1	0-1	0.0
	5-7	7.1
B179-SB2	0-1	0.0
	7-9	0.0
B179-SB3	0-1	0.0
	7-9	0.0

(1) Soil samples were analyzed for TCL VOCs, TCL SVOCs, pesticides/PCBs, TAL metals, and PGDN.
(2) PID – Photoionization Detector using a 10.6 eV bulb.
(3) The elevated PID reading from B185A1-SB3 (3 to 5 ft bgs) was likely due to moisture or dirt in the PID sensor or the presence of an ionizable chemical that is not a site contaminant (as described in Section 3, substantial contaminant concentrations were not detected in this sampling interval).

2.2 BEDROCK DRILLING

Bedrock was drilled using air hammer and/or air rotary drilling techniques. The drill casing (6-inch or 4-inch inside diameter, depending on location) was grouted at least 2 feet into the bedrock surface to isolate the bedrock aquifer. The bedrock drilling continued an additional 22 feet and 33 feet in North Meadow wells MW-127B and MW-128B, respectively, and an additional 50 feet in the Building 179 CUST Area wells MW-129B and MW-130B, as determined based on characterization of the bedrock during drilling. Rock cuttings were logged during drilling by the field geologist. Where possible, features such as rock type, grain size, color, and hardness of the rock were recorded. Details are provided on the boring logs presented in Attachment A.

2.3 BOREHOLE GEOPHYSICS

Borehole geophysical logging was performed at five open-hole bedrock well locations (Attachment B). Three existing open-hole bedrock wells (MW-116B, MW-117B and MW-118B) that had been installed during the RI field work were selected for borehole geophysical logging to assist in delineation of the trichloroethene (TCE) plume in the North Meadow. Two other locations (MW-129B and MW-130B) were selected to assist in delineation of the 1,1-dichloroethane (DCA) plume, north of the Building 179 CUST. Borehole logging was conducted to characterize the bedrock fracturing, locate water-bearing fractures, and identify zones that may transport contaminants. The borehole surveys included fluid temperature, fluid resistivity, caliper, acoustic televiewer, and heat-pulse flow meter logging under both ambient and induced-flow conditions and gamma logging. Geophysical information was reviewed and used to select depth intervals for the well screens to be constructed in the wells in the North Meadow. Two screened intervals at each of the three North Meadow locations were selected to attempt to obtain vertical

delineation of the TCE plume. For the new open borehole wells in the 1,1-DCA plume (MW-129B and MW-130B) the borehole geophysical results were used to select intervals for collecting low-flow groundwater samples in these wells.

2.4 CONSTRUCTION OF MONITORING WELLS

In the North Meadow, at MW-128B, and to the north at MW-127B, new bedrock boreholes were originally planned to be completed as two nested wells within each borehole, constructing the nested wells with polyvinyl chloride (PVC) screens and riser pipe. During the advancement of the bedrock borehole at MW-127B, the borehole yielded 40 gallons per minute (gpm) at a depth of 44 feet bgs. During the advancement of the bedrock borehole MW-128B, the borehole yielded 11 gpm at a depth of 51 feet bgs. Based on the observed yields, it was concluded that the high-yielding fracture set was encountered, and drilling deeper was not necessary. Therefore, a field modification was made and these two locations were each completed as single wells, with PVC well screens from 36 to 46 feet bgs (MW-127B) and from 35 to 45 feet bgs (MW-128B).

In the North Meadow area, borehole geophysical logging was performed in existing open-borehole bedrock wells, MW-116B, MW-117B, and MW-118B. The results from the borehole geophysical logging were used to select the depth intervals for well screens for deep and shallow collocated wells at each location (MW-116B-D1/D2; MW-117B-D1/D2 and MW-118B-D1/D2). New borings were advanced to install the collocated shallow bedrock well (D1) at each location. This approach was used, rather than constructing two nested wells within each existing open borehole, in order to build permanent wells using appropriate construction. The collocated deeper well (D2) at each location was constructed in the existing open-hole bedrock boreholes MW-116B, MW-117B, and MW-118B, which were converted to PVC screened wells, MW-116-D2, MW-117B-D2, and MW-118-D2. Starting at the bottom of the open borehole and working to the top, the wells were constructed with screened intervals at depths selected to intersect the most prominent water-bearing fracture(s), based upon the results of the borehole geophysics. A summary of the final well screen intervals is presented below.

Well Identifier		PVC Screened Interval (feet bgs)
MW-116B	D1	14 - 29
	D2	29 - 39
MW-117B	D1	19 - 29
	D2	29 - 39
MW-118B	D1	27 - 37
	D2	37 - 47

Well Identifier	Open Borehole Interval (feet bgs)
MW-127B	36 - 46
MW-128B	35 - 45
MW-129B	8 - 58
MW-130B	10.5 - 60.5

Monitoring wells were constructed with Schedule 40 PVC, slotted (10-slot) screen, flush-threaded to PVC riser pipe. Wells MW-127B and MW-128B were constructed with 2-inch diameter PVC, and wells MW-116B-D1/D2, MW-117B-D1/D2, and MW-118B-D1/D2 were constructed with 1.5-inch diameter PVC. A sand pack was placed in the annular space around the well screen and up to two feet above the top of the well screen. A 2-foot-thick bentonite seal was placed and hydrated above the sand pack. Well construction diagrams are provided in Attachment A.

2.5 GROUNDWATER SAMPLING

A synoptic water level round was performed on August 5, 2010. Data from the synoptic round are presented in Table 3-1 and Appendix C of the SRI. Groundwater elevations in each of the wells were determined based on depth to groundwater measurements that were collected within a 4-hour time period, using a Solinst oil/water interface probe. Depths were measured relative to a surveyed point marked on the top of each well casing.

Three groundwater sampling events were conducted during the SRI. The first event was conducted in June/July 2010, and included existing wells located in the vicinity of Building 179 and within the NUSC Disposal Area and the North Meadow. This first event also included the collection of shallow groundwater samples using PDBs installed in the shallow sediments on the eastern bank of NUWC Pond. The second groundwater sampling event was conducted in August 2010, and included the newly-installed and newly-modified monitoring wells, in addition to one existing monitoring well requested by the Navy to be added to the sampling program (MW-124B). The third groundwater sampling event was conducted in July 2010, during the advancement of soil borings with the DPT rig in the Building 185 Complex. During this event, one groundwater sample was collected from a temporary microwell.

The wells were sampled following the Environmental Protection Agency (EPA) Region 1 Low Flow Protocol, using either bladder pumps or peristaltic pumps. Groundwater sample stabilization readings are provided in Table 2-1. Groundwater sampling locations are indicated on Figure 2-1. Groundwater sample log sheets and well development logs are provided in Attachment C of this report.

2.5.1 Groundwater Sampling - Existing Monitoring Wells and PDB Locations

During the first groundwater sampling event (June/July 2010), a total of 17 selected existing monitoring wells were sampled and two new PDB locations were sampled.

In the Building 179 Area, ten existing monitoring wells were sampled (MW-6A, MW-6B, MW-7A, MW-7B, MW-8A, MW-8B, MW-9B[2], MW-11, MW-12, and MW-13B). Three historical wells reportedly existing in the Building 179 CUST Area (R179-MW1, -MW2 and -MW3) were not sampled as they were discovered to have been either abandoned or paved over.

In the NUSC Disposal Area, six existing wells were sampled during this first event (MW-04B, MW-101B, MW-103B, MW-104B, MW-105B, and MW-122). An additional existing well was sampled during the second groundwater event (see Section 2.5.2).

In the North Meadow, one existing well was sampled, MW-03B.

During this sampling event, groundwater was also sampled from two new PDB sampling locations (DW-15 and DW-16). The PDBs were installed at the eastern bank of NUWC Pond (Figure 2-1), approximately one foot below the sediment surface. The PDBs were deployed for a period of one week prior to sample collection. The same protocol used for PDB sampling in the RI was used during the SRI.

A summary of analyses performed for groundwater samples collected from the 17 existing wells and from the two PDB locations is presented below. Note that ammonia, methane/ethane/ethane (MEE), ferrous iron, phosphate/nitrate/nitrite/sulfate (PNNS), sulfide, and total organic carbon (TOC), as cited on the table below, are also described as "biodegradation parameters" elsewhere in this SRI report.

Sample Location/ Identifier[(a)]	Date Sampled	TCL VOCs	1,4-dioxane	PGDN	Cyanide	Ammonia	MEE[(b)]	Ferrous Iron	PNNS[(c)]	Sulfide	TOC[(d)]
DA-MW6A-062310	6/23/10	X									
DA-MW6B-061710	6/17/10	X									
DA-MW7A-062310	6/23/10	X	X	X	X	X	X	X	X	X	X

[2] The Work Plan Addendum specified MW-9A should be sampled, however since this well was dry, the collocated bedrock well, MW-9B, was sampled.

Sample Location/ Identifier[a]	Date Sampled	TCL VOCs	1,4-dioxane	PGDN	Cyanide	Ammonia	MEE[b]	Ferrous Iron	PNNS[c]	Sulfide	TOC[d]
DA-MW7B-062210	6/22/10	X	X	X	X	X	X	X	X	X	X
DA-MW8A-062910	6/29/10	X									
DA-MW8B-062210	6/22/10	X									
DA-MW9B-062910	6/29/10	X	X	X	X	X	X	X	X	X	X
DA-MW11-062910	6/29/10	X	X	X	X	X	X	X	X	X	X
DA-MW12-063010	6/30/10	X	X	X	X	X	X	X	X	X	X
DA-MW13B-063010	6/30/10	X	X	X	X						
DA-MW04B-063010	6/30/10	X	X								
DA-MW101B-062310	6/23/10	X	X	X	X	X	X	X	X	X	X
DA-MW103B-070110	7/1/10	X	X	X	X	X	X	X	X	X	X
DA-MW104B-061810	6/18/10	X	X	X							
DA-MW105B-062810	6/28/10	X	X	X		X	X	X	X	X	X
DA-MW122-063010	6/30/10	X	X	X							
DA-MW03B-062810	6/28/10	X	X	X		X	X	X	X	X	X
DA-DW-15-0610	06/25/10	X	X								
DA-DW-16-0610	06/25/10	X	X								

(a) Last segment of sample identifier indicates month, day, and year of sample collection.
(b) MEE - methane/ethane/ethene
(c) PNNS – phosphate/nitrate/nitrite/sulfate
(d) TOC – total organic carbon

2.5.2 Groundwater Sampling – New Locations

During the second groundwater sampling event (August 2010), 10 newly-installed or newly-modified monitoring wells and one existing well (MW-124B) were sampled in the NUSC Disposal Area.

In the Building 179 Area, two newly installed wells were sampled (MW-129B and MW-130B).

In the North Meadow and to the north of this area, five new wells and three modified wells were sampled (newly installed wells MW-116B-D1, MW-117B-D1, MW-118B-D1, MW-127B, and MW-128B, and modified wells MW-116B-D2, MW-117B-D2, and MW-118B-D2).

A summary of analyses performed for groundwater samples collected from these 11 wells is presented below.

Sample Location/ Identifier[(a)]	Date Sampled	TCL VOCs	1,4-dioxane	PGDN	Ammonia	MEE[(b)]	Ferrous Iron	PNNS[(c)]	Sulfide	TOC[(d)]
DA-MW-116B-D1-08062010	8/6/2010	X								
DA-MW-116B-D2-08062010	8/6/2010	X								
DA-MW-117B-D1-08112010	8/11/2010	X	X		X	X	X	X	X	X
DA-MW-117B-D2-08112010	8/11/2010	X	X		X	X	X	X	X	X
DA-MW-118B-D1-08102010	8/10/2010	X								
DA-MW-118B-D2-08102010	8/10/2010	X								
DA-MW-127B-08102010	8/10/2010	X	X		X	X	X	X	X	X
DA-MW-128B-08092010	8/9/2010	X			X	X	X	X	X	X
DA-MW-129B-08102010	8/10/2010	X	X		X	X	X	X	X	X
DA-MW-130B-08092010	8/9/2010	X		X						
DA-MW-124B-081110	8/11/10			X						

(a) Last segment of sample identifier indicates month, day, and year of sample collection.
(b) MEE - methane/ethane/ethene
(c) PNNS – phosphate/nitrate/nitrite/sulfate
(d) TOC – total organic carbon

2.5.3 Groundwater Sampling from DPT Boring

On July 29, 2010, one groundwater sample was collected from a temporary, PVC microwell installed in Area 3 of the Building 185 Complex, at boring location B185-A3-SB1. To build the microwell, a 5-foot length of 0.01-inch slot PVC screen was placed at the bottom of the boring (9 feet bgs) and the groundwater sample was collected. The sample was analyzed for TCL VOCs, 1,4-dioxane, and biodegradation parameters (ammonia, MEE, ferrous iron, PNNS, sulfide, and TOC). On July 30, 2010, the temporary PVC microwell was removed and the boring was abandoned/backfilled in accordance with the Work Plan Addendum (Tetra Tech, 2010b). A sufficient volume of groundwater for sample collection was not encountered in the DPT borings advanced in the Building 179 Area. Borings B179-SB1 and B179-SB2 were dry. Boring B179-SB3 was wet at the bottom of boring (about 13 feet bgs), but the water table was in the weathered bedrock and the boring was terminated at 13.5 feet bgs.

2.6 SEDIMENT AND SURFACE WATER SAMPLING

Three collocated surface water and sediment samples were collected from Deerfield Creek in the area east of the Building 179 CUST Area. Initially, on June 25, 2010, the three sediment samples (SD-B179-01, SD-B179-02 and SD-B179-04) and three surface water samples (SW-B179-01, SW-B179-02 and SW-B179-04) were collected (Figure 2-1). Analysis of the three surface water samples included only TCL SVOCs at that time. Analysis of the sediment samples included TCL SVOCs for all three samples, and TCL VOCs for SD-B179-02 and SD-B179-04 only.

In response to a request from the Rhode Island Department of Environmental Management (RIDEM), the Navy attempted to sample surface water and sediment from these locations a second time, on August 12, 2010. The additional surface water samples could not be collected, because this part of Deerfield Creek was dry. The requested additional sediment sampling was conducted at this time, and included analysis of total petroleum hydrocarbons (TPH), 1,4-dioxane, PGDN, and cyanide, as well as VOCs at sample location SD-B179-01.

In accordance with the Work Plan Addendum (Tetra Tech, 2010b), the surface water and sediment samples were collected beginning at the most downstream location and then continuing upstream. Attempts were made to collect samples in depositional areas with suspected high organic content, however the streambed was observed to be generally rocky in these locations. Where standing water was present, water quality parameters including temperature, conductivity, pH, dissolved oxygen (DO), and oxidation-reduction potential (ORP) were collected using a YSI multi-parameter meter. Turbidity measurements were conducted using a LaMotte turbidity meter.

To collect surface water for pre-preserved sample containers, an unpreserved bottle was used to collect the sample, which was then transferred to the preserved bottle at each sample location. Otherwise, surface water was collected via direct-dip, directly filling the sample containers from the surface water body. Sediment was collected using a stainless steel trowel, and only after all surface water sample containers were filled. Sediment samples were collected from the 0- to 6-inch depth interval (below sediment surface). The field team attempted to dig down to one foot below the sediment surface, as described in the Work Plan Addendum (Tetra Tech, 2010b); however, large gravel was encountered which precluded achieving this depth. Sediment sample containers for VOC analysis were filled immediately upon retrieving the sediment. Once VOC samples were collected and a sufficient volume of sediment was obtained for the remaining analyses, the sediment was homogenized in a mixing bowl and the remaining sample containers were filled. Surface water and sediment sample log sheets are provided in Attachment C.

3.0 ANALYTICAL RESULTS

The analytical results from the SRI are presented in this section and are discussed according to the primary objectives/data gaps that were identified in the Work Plan Addendum (Tetra Tech, 2010b).

- The North Meadow – A limited bedrock investigation was conducted to further characterize the vertical and horizontal distribution of the chlorinated volatile organic compound (CVOC) plume in groundwater in that area, where the primary contaminant, TCE, is present separate from other areas of the Site. Shallow overburden groundwater was sampled via PDBs along the eastern shore of NUWC Pond where bedrock groundwater discharges. A limited number of soil samples were also analyzed to provide information on possible source areas.

- The Building 179 Area – Activities were conducted to better define the nature and extent of bedrock groundwater contamination in this area. Sediment and surface water samples were collected. The potential for residual soil contamination in the Building 179 CUST Area was investigated using additional soil sampling and analysis.

- The Building 185 Complex – Soil and groundwater in the Building 185 area were evaluated for the potential presence of residual contamination related to a former release(s) of Otto Fuel. Samples were analyzed for PGDN and other potential contaminants.

- Evaluation of 1,4-dioxane, cyanide, and PGDN – The presence and level of 1,4-dioxane in groundwater was evaluated in areas impacted by CVOCs. Groundwater was sampled at specific target locations for cyanide and PGDN.

The synoptic groundwater elevation measurements from August 5, 2010 are summarized in Table 3-1. Figure 3-1 provides the interpreted potentiometric surface for the bedrock aquifer. The flow regime observed during the SRI is consistent with that from the RI.

3.1 NORTH MEADOW INVESTIGATION

As part of the SRI, additional activities were conducted in the North Meadow area with the primary objective of providing supplemental data to further evaluate TCE in bedrock and in shallow groundwater discharging to NUWC Pond. A limited number of soil samples were also collected to evaluate the possibility of TCE in soils and a potential source area of TCE. As discussed in the RI (Tetra Tech, 2010a), a separate source area of TCE is apparent in the North Meadow area (inferred from groundwater concentrations), where the highest concentrations of TCE at the site were detected during the 2003

SASE and 2008 RI sampling events (Tetra Tech, 2005 and 2008). TCE was detected in PDB groundwater samples collected adjacent to the North Meadow along the eastern shoreline of NUWC Pond. These data indicate that TCE in groundwater discharges from the bedrock through the pond sediment to the eastern portion of NUWC Pond.

3.1.1 North Meadow – Groundwater

Groundwater data from the SRI are presented in Table 3-2.

TCE was detected in six of the nine wells (67 percent) sampled in the North Meadow and in both PDB groundwater samples at concentrations above the federal Maximum Contaminant Level (MCL) of 5 micrograms per liter (µg/L) (Figure 3-2). The highest concentration of TCE was detected in well MW-128B at 1,200 µg/L. One or more degradation products of TCE were also detected (cis-1,2-DCE; trans-1,2-DCE; and vinyl chloride), all below MCLs. One concentration of 1,1-DCE (13 µg/L in MW-128B) exceeded its MCL of 7 µg/L (Figure 3-3). It should be noted that only the TCE and cis-1,2-DCE data are usable from the two PDB groundwater samples. The samples were analyzed past the acceptable holding time; therefore, the non-detect results from these two samples were rejected.

1,4-Dioxane was not detected above its EPA Regional Screening Level (RSL) of 0.67 µg/L.

The vertical distribution of TCE in bedrock was evaluated with co-located shallow/deep bedrock monitoring wells (MW-117B-D1/D2 and MW-118B-D1/D2). TCE concentrations decreased with depth.

The concentrations and spatial distribution of TCE and its daughter products, are consistent with the conceptual site model (CSM) presented in the RI; that is, there is a localized plume of TCE in bedrock groundwater in the North Meadow, discharging to NUWC Pond to the west. The plume appears to migrate in a northwesterly direction and is also influenced by a major north-south-trending bedrock fracture zone in this area. TCE concentrations decreased over time in well MW-03B, from 1,500 µg/L in 2003 to 190 µg/L in 2008, and then to 150 µg/L in 2010. Historical groundwater data are presented in Attachment E. The TCE degradation products cis-1,2-DCE and vinyl chloride were detected at concentrations below MCLs at the downgradient (northern) monitoring wells MW-127B-D1/D2.

Groundwater analytical data (Table 3-2) and relevant field data (Table 2-1) were evaluated to assess the potential for biodegradation of CVOCs. Based on the available data, ideal conditions for anaerobic reductive dechlorination are not widespread throughout the North Meadow area. Elevated sulfate concentrations (Table 3-2) suggest ample competition for the CVOCs as electron acceptors. Reducing conditions are not evident throughout the aquifer, as evidenced by positive ORP values (e.g., in wells

MW-118B-D1/D2 and MW-128B where TCE was measured highest) and the presence of DO (Table 2-1) in some wells.

The natural attenuation of groundwater contaminants is being evaluated through multiple lines of evidence which examine whether degradation is occurring and whether the geochemical conditions are favorable for degradation to occur. This includes examinations of temporal and spatial trends showing decreasing CVOC concentrations and plume footprint, the presence of biodegradation products, and the comparison of CVOC and daughter products footprints to geochemical footprints. At Site 08, a limited number of historical groundwater sampling events are available for trend evaluations; therefore, the Navy is continuing groundwater monitoring at the Site (results to be provided under separate cover).

3.1.2 North Meadow – Soil

Soil samples were collected during the installation of wells MW-127B and MW-128B (Figure 2-1) and were analyzed for TCL VOCs. Results for detected analytes are provided in Table 3-3 (surface soils) and Table 3-4 (subsurface soils). Only a trace amount of TCE (1.1 J micrograms per kilogram [µg/kg]) was detected in only one sample (127B at a depth of 4 to 6 ft bgs); therefore, no continuing source was identified in soil.

3.2 BUILDING 179 AREA INVESTIGATION

Additional activities in the Building 179 Area were conducted with the primary objective of updating and further characterizing bedrock groundwater contamination in this portion of the site, as well as evaluating current surface water, sediment, and soil conditions in this area.

3.2.1 Building 179 Area – Groundwater

Groundwater samples were collected from eleven monitoring wells in the Building 179 area, including six bedrock monitoring wells (MW-6B, MW-7B, MW-8B, MW-9B, MW-129B, and MW-13B), and five overburden/bedrock interface or overburden wells (MW-6A, MW-7A, MW-8A, MW-11, and MW-12). Samples were analyzed for TCL VOCs. A subset of the samples was analyzed for 1,4-dioxane, PGDN, cyanide, and biodegradation/natural attenuation parameters. Results are presented in Table 3-2.

Overburden/ Bedrock Interface Groundwater – Building 179 Area

MW-7A contained the highest concentrations of CVOCs in this group, consisting primarily of chlorinated ethanes. The MCLs for 1,1-DCE (7 µg/L) and 1,1,1-TCA (200 µg/L) were exceeded at MW-7A, with

1,1-DCE at 15 µg/L (Figure 3-3) and 1,1,1-TCA at 290 µg/L (Figure 3-4). Collocated bedrock well, MW-7B, also contained these two compounds with similar exceedences. PCE (Figure 3-5) and TCE (Figure 3-2) were detected at concentrations below MCLs in wells MW-07A and MW-12. No CVOCs were detected in upgradient wells MW-06A and MW-11.

1,4-Dioxane (Figure 3-6) and PGDN were not detected in any of these overburden/bedrock interface wells.

Bedrock Groundwater - Building 179 Area

MW-7B contained the highest chlorinated ethane concentration in this group, and exceeded MCLs for 1,1,1-TCA, detected at 440 µg/L (Figure 3-4). 1,1-DCE, which is a potential 1,1,1-TCA daughter product (11 µg/L, Figure 3-3) and PCE (8.3 µg/L, Figure 3-5) slightly exceeded their MCLs (7 µg/L and of 5 µg/L, respectively) in MW-7B. Downgradient from that, 1,1-DCE also exceeded the MCL at MW-9B (18 µg/L), but was detected below the MCL at MW-129B. 1,1,1-TCA was detected at concentrations below the MCL in wells MW-09B and MW-129B (Figure 3-4), and PCE was detected below the MCL in well MW-13B (Figure 3-5). 1,1-DCA (Figure 3-7) and chloroethane, which are also daughter products of 1,1,1-TCA, were both detected at 1,000 µg/L at MW-7B, and were detected at lower concentrations at MW-09B and MW-129B. CVOCs were not detected at upgradient well MW-6B, nor at MW-08B, to the northeast and across Deerfield Creek.

The EPA RSL for 1,4-dioxane (0.67 µg/L) was exceeded at one location (MW-09B at 8.3 µg/L).

Biodegradation/Natural Attenuation Parameters: Overburden and Bedrock Groundwater

Analytical and field data were evaluated to assess the potential for biodegradation of CVOCs in bedrock and overburden. As noted in Section 3.1.1, multiple lines of evidence are being evaluated to assess whether degradation is occurring and conditions will allow it to continue to occur.

In bedrock groundwater in the Building 179 area, the data show that conditions likely to support anaerobic reductive dechlorination are widespread throughout the area. At MW-9B in particular, conditions strongly supporting anaerobic biodegradation of TCA by methanogens (methane-producing bacteria) are indicated, based on an extremely low ORP and low DO (Table 2-1), an elevated ferrous iron (Table 3-2), extremely high methane (6,000 µg/L, where vinyl chloride accumulates), and the highest ethane and ammonia levels detected (also the highest 1,4-dioxane and the only cyanide detection during the SRI[1], as

[1] The trace detection of cyanide in MW-9B (5.6 J µg/L) slightly exceeded the project action limit (5.2 µg/L) which was based on the EPA National Recommended Water Quality Criteria (NRWQC) for freshwater, but did not exceed the MCL (200 µg/L).

shown on Table 3-2). Chemical results at MW-9B are also indicative of this process: a ratio of 41 µg/L of 1,1,1-TCA to 106 µg/L of 1,1,1-TCA daughter products was measured, or approximately 0.4.

Between 2008 and 2010, while the levels of total CVOCs at MW-7B dropped only slightly, from 2,687 µg/L to 2,470 J µg/L, the ratio of the parent compound, 1,1,1-TCA, to daughter products, including 1,1-DCA, 1,1-DCE, and chloroethane, decreased significantly, from a ratio of approximately 1.5 in 2008 to 0.2 in 2010, indicating significant anaerobic biodegradation processes taking place at this location. The most notable changes between the two sampling events were the significant decrease in 1,1,1-TCA, from 1,600 µg/L to 440 µg/L, and the increase in daughter product, chloroethane, from 22 J µg/L to 1,000 µg/L. Concentrations of PCE and daughter product, cis-1,2-DCE, increased slightly at MW-7B. These results for MW-7B, are evidence of anaerobic reductive dechlorination occurring at this location. The very low ORP and DO measurements at MW-13B, MW-7B, and MW-8B also indicate conditions likely to support the anaerobic reductive pathway. These conditions are also likely present at MW-129B, where a relatively low ORP and low DO were measured.

The data from overburden wells in this area indicate that anaerobic biodegradation is likely supported in localized areas. The strongest evidence supporting anaerobic reductive dechlorination in an overburden well was measured at MW-7A, where the lowest ORP of this subgroup of wells was measured, as well as a relatively low DO (Table 2-1) and the highest ferrous iron concentration (Table 3-2). However, at MW-8A and MW-12, for example, DO and/or ORP readings were above the range that is typically considered conducive to anaerobic biodegradation.

Additional sampling is being performed to continue to evaluate biodegradation process at the Site (results to be provided under separate cover).

3.2.2 Building 179 Area – Soil

Six soil samples were collected from three boring locations (B179-SB1, B179-SB2, and B179-SB3), including one surface and one subsurface soil sample from each location (Figure 3-8). Samples were analyzed for VOCs, SVOCs, pesticides, PCBs, PGDN, and metals. The main objective of these samples was to confirm that contaminated soils were successfully excavated from this area during a previous removal action. Results for detected analytes are provided in Table 3-3 (surface soils) and Table 3-4 (subsurface soils).

As depicted on Figure 3-8, two of the three soil borings (B179-SB2 and B179-SB3) in July 2010 were inadvertently installed within the backfill material placed after the previous removals. The initial analytical results from these two locations are therefore being used to confirm that the backfill used in these two

excavations was clean. The Navy remobilized to the site in November 2010 to collect the soil samples from the previously proposed locations (per the *Work Plan Addendum*, as shown below) to further confirm successful removal of the contaminated soil from these areas.

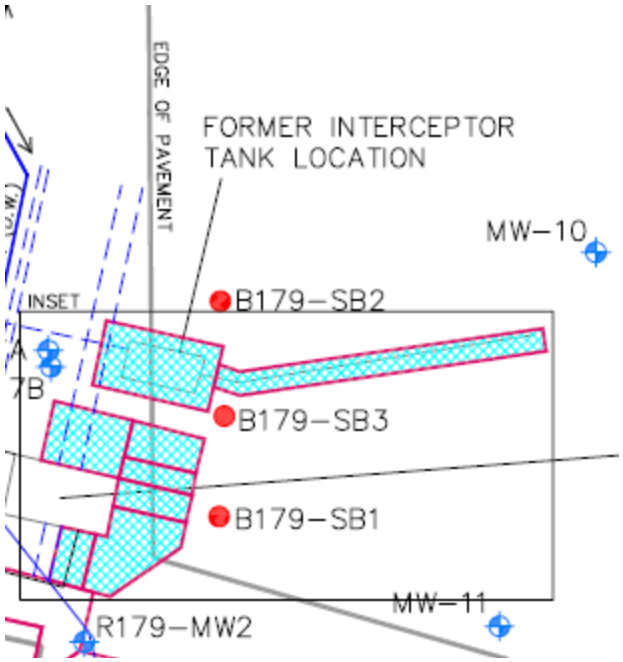

No VOC or pesticide criteria were exceeded in the soil samples from the Building 179 Area. PCBs and PGDN were not detected.

Nearly all detected SVOCs are polynuclear aromatic hydrocarbons (PAHs). In surface soil (0 to 1 foot bgs) from B179-SB1, where the maximum total PAH concentration in soil (45,200 J µg/kg) was reported, eight PAHs exceeded one or both screening levels, EPA residential soil RSLs, and/or RIDEM residential Direct Exposure Criteria (DEC). In surface soils at B179-SB2 and B179-SB3, one to three of these PAHs exceeded the RSLs. As shown on Table 3-3, the eight PAHs exceeding one or both levels in surface soil consist of benzo(a)anthracene, benzo(a)pyrene, benzo(b)fluoranthene, benzo(g,h,i)perylene, benzo(k)fluoranthene, chrysene, dibenzo(a,h)anthracene, and indeno(1,2,3-cd)pyrene.

In subsurface soil, only one PAH, benzo(a)pyrene, slightly exceeded the RSL (15 µg/kg) at two locations (B179-SB1 and B179-SB2) in July 2010 (16 J µg/kg) (Table 3-4). The resampling of B179-SB2 in November 2010 did not exceed screening levels (Table 3-4).

In the subsurface soil sample from B179-SB3, arsenic exceeded the RIDEM DEC of 7 mg/kg. The RSL for arsenic, 0.39 mg/kg, was exceeded in each of the soil samples from this area. The RSL for manganese (390 mg/kg) was exceeded in only one of the samples (606 mg/kg in B179-SB03-0709 collected in July 2010).

3.2.3 Building 179 Area – Surface Water and Sediment

Three surface water samples (SW-B179-01, SW-B179-02, and SW-B179-04) were collected from Deerfield Creek, east of the Building 179 area (Figure 2-1). The samples were analyzed for SVOCs, and none were detected (Table 3-5). Three collocated sediment samples were analyzed for VOCs, SVOCs, 1,4-dioxane, PGDN, TPH, and cyanide. Results for compounds detected in sediment samples are presented in Table 3-6.

At SD-B179-01, the VOC carbon disulfide was detected at an estimated concentration of 14 µg/kg, exceeding the Ecological Screening Level (ECO SL) of 0.85 µg/kg, and the PAHs benzo(a)pyrene and chrysene also exceeded RIDEM DECs (not adjusted for sediment exposure [soil screening levels are typically divided by 10 for use as sediment screening levels]) at this location. All but one of the maximum PAH concentrations were detected here. TPH (C09-C36) was detected at each of the three sediment locations but exceeded the RIDEM DEC and RIDEM Protection of Groundwater (POG) criteria for TPH (500 mg/kg) only at SD-B179-01 (640 J mg/kg).

Sixteen of 18 SVOCs detected in sediment samples are PAHs, and most were detected at each of the three sampling locations. The compounds most often exceeding the RSLs and RIDEM POGs include benzo(a)anthracene, benzo(a)pyrene, benzo(b)fluoranthene, dibenzo(a,h)anthracene, and indeno(1,2,3-cd)pyrene. Most of the detected SVOCs exceeded ECO SLs in one or more locations.

The other analytes for sediment (1,4-dioxane, PGDN, and cyanide) were not detected.

3.3 BUILDING 185 COMPLEX INVESTIGATION

SRI activities were conducted in Areas 1 and 3 of the Building 185 Complex, with the primary objective of evaluating potential PGDN subsurface soil and groundwater contamination.

3.3.1 Building 185 Complex – Soil

A total of ten subsurface soil samples were collected, collected as two samples from each of five borings: four borings in Area 1 (B185A1-SB1 through B185A1-SB4) and one in Area 3 (B185A3-SB1) (Figure 3-9). The soil samples were analyzed for VOCs, SVOCs, pesticides, PCBs, PGDN, and metals. Positive detections and sample intervals for subsurface soil samples are provided in Table 3-4.

No VOC criteria were exceeded in any of the samples. Seventeen of the 18 SVOCs detected in one or more soil samples were PAHs. The maximum total PAHs concentration, 2,430 J µg/kg, was reported in

the 1- to 3-foot interval sample from the Area 1 boring, B185A1-SB4. This was also the only sample with four PAHs that exceeded RSLs. Five other samples had only one PAH, benzo(a)pyrene, at a concentration exceeding the RSL.

No pesticide screening levels were exceeded in any of the samples, and PCBs were not detected. PGDN was not detected above the RSL of 57,000 µg/kg.

For arsenic, the RSL of 0.39 mg/kg was exceeded in all 10 soil samples, and the RIDEM DEC of 7 mg/kg was exceeded in 7 of the 10 samples (Table 3-4). The only other metals with screening value exceedences were minimal and/or in few samples: (1) the RIDEM DEC for manganese in one boring (B185-A1-SB4); (2) a slight exceedence of the RIDEM DEC (0.4 mg/kg) for beryllium (maximum detection of 0.6 J mg/kg); and (3) a slight exceedence of the RSL for cobalt (23 mg/kg) in B185-A1-SB1-07-08 (23.8 mg/kg).

3.3.2 Building 185 Complex – Groundwater

One groundwater sample was collected in Area 3 via a shallow, temporary microwell from boring B185-A3-SB1, installed to intersect the water table. The sample was analyzed for VOCs, 1,4-dioxane, cyanide, and biodegradation/natural attenuation parameters (see Section 2.5).

Results for compounds detected in groundwater samples are summarized in Table 3-2. VOCs, 1,4-dioxane, and cyanide were not detected in this groundwater sample. A trace amount of PGDN was detected (0.11 J µg/L).

3.4 ADDITIONAL GROUNDWATER SAMPLING BETWEEN BUILDING 185 AND THE NORTH MEADOW

This section discusses the results of groundwater sampling conducted in the South Meadow and west-northwest of the Building 185 Complex, near or within the Deerfield Creek valley. This is considered to be an area of commingled groundwater contamination that includes contaminants from the Building 179 Area CVOC plume and from incidental releases from the Building 185 Complex, the Paved Storage Areas, and/or the South Meadow.

Results

Seven monitoring wells in this area were sampled, including existing bedrock wells MW-04B, MW-101B, MW-103B, MW-104B, and MW-105B, existing overburden/bedrock well MW-122, and newly-installed bedrock monitoring well, MW-130B.

Results for compounds detected in groundwater samples are summarized in Table 3-2, and select VOC results for this area are included on Figures 3-2 through 3-7.

Cyanide was not detected at either of the two wells that were sampled for this analyte, MW-101B and MW-103B.

1,1,1-TCA did not exceed the MCL (Figure 3-4). 1,1,-DCA (Figure 3-7), the initial breakdown product of 1,1,1-TCA, was the VOC that occurred at the highest concentrations and was detected in each of the seven wells in this area. 1,1-DCE, a breakdown product of 1,1,1-TCA via abiotic elimination, exceeded the MCL at MW-101B, MW-103B, MW-104B, and MW-105B (Figure 3-3). These wells approximately parallel the Deerfield Creek channel. Chloroethane, the last chlorinated organic compound in the reductive dechlorination process of 1,1,1-TCA, was detected below screening benchmarks at MW-101B and at a trace level at MW-103B.

PCE (Figure 3-5) and some of its breakdown products, TCE, cis-1,2-DCE, and vinyl chloride, were also detected in several wells in this area. PCE did not exceed the MCL. TCE (Figure 3-2) slightly exceeded the MCL (5 µg/L) at MW-103B (15 µg/L) and MW-104B (6.3 µg/L). Cis-1,2-DCE did not exceed the MCL. Vinyl chloride slightly exceeded the MCL (2 µg/L) only at MW-103B (3.7 µg/L).

Total CVOCs in the most upgradient well MW-101B decreased from 1,270 µg/L in 2008 to 760 µg/L in 2010. However, in the wells progressively downgradient of this location (MW-103B, -104B, -105B, and -122), total CVOCs increased between 2008 and 2010, suggesting the migration of the plume generally northerly along the Deerfield Creek channel.

Biodegradation Parameters

Laboratory and field data from three of the seven wells in this area (MW-101B, MW-103B, and MW-105B) were evaluated to assess the potential for biodegradation of CVOCs in bedrock. As noted in Section 3.1.1, multiple lines of evidence are being evaluated to assess whether degradation is occurring and conditions will allow it to continue to occur. The results of this evaluation varied by location within the contaminant plume.

At MW-101B, west of Deerfield Creek, reducing conditions needed to support anaerobic degradation of CVOCs are not evident (as indicated by an ORP greater than 50 mV, a DO greater than 1 mg/L, and non-detect ferrous iron levels). At MW-103B, north and east of Deerfield Creek, an extremely low ORP in conjunction with a low DO and an elevated ferrous iron are evidence of strongly reducing conditions that could support anaerobic degradation of CVOCs in this area of the plume. At the third location, MW-105B, conditions may be somewhat conducive to anaerobic biodegradation processes: measurements at this location indicate a relatively low ORP and DO, with a negligible amount of ferrous iron.

Additional sampling is being performed to continue to evaluate biodegradation process at the Site (results to be provided under separate cover).

3.5 1,4-DIOXANE CHARACTERIZATION

In industrial processes, 1,4-dioxane can be used as a stabilizer for chlorinated solvents. 1,4-Dioxane contamination is commonly associated with 1,1,1-TCA plumes in groundwater. Because 1,4-dioxane typically migrates in groundwater faster than 1,1,1-TCA, it can be detected at the leading edge of a plume.

At Site 8, 1,4-dioxane was detected at 9 of the 21 sampled locations (Figure 3-6); however, the RSL was exceeded at only five of these locations (Table 3-2).

1,4-Dioxane was detected in groundwater at low estimated concentrations as far north (downgradient area) as MW-127B, north of the North Meadow and the furthest downgradient well sampled during the SRI. This was the lowest level of 1,4-dioxane detected, and was the only location where 1,1,1-TCA was not detected together with 1,4-dioxane.

In groundwater downgradient of the Building 179 source area (i.e., downgradient from the MW-7A/B area), there is generally a good correlation of 1,4-dioxane concentrations with 1,1,1-TCA and 1,1-DCA concentrations. In contrast, at/near the source area, where the highest levels of 1,1,1-TCA and 1,1-DCA were detected, 1,4-dioxane was either not detected (MW-7B) or was detected only at a trace level (MW-7A). In progressively downgradient wells in which 1,4-dioxane was detected, from MW-101B continuing north to wells MW-103B, -104B, -105B, -128B, and -127B, the 1,4-dioxane concentrations progressively decrease from 4 µg/L to 0.22 J µg/L, while almost all the correlated 1,1,1-TCA and 1,1-DCA concentrations also progressively decrease (Figure 3-4 and Figure 3-7, respectively)

As noted in Section 3.2.3, 1,4-dioxane was not detected in the three sediment samples analyzed.

3.6 OTTO FUEL CHARACTERIZATION

PGDN was not detected above screening levels during the SRI. In groundwater, PGDN was detected at a trace level (0.11 µg/L) in only 1 of 15 samples. In soil, PGDN was detected in only two soil boring samples at trace levels (260 and 420 µg/kg). PGDN was not detected in sediment samples.

4.0 SCREENING LEVEL HUMAN HEALTH RISK ASSESSMENT

This section presents the results of a screening level human health risk assessment (HHRA) of chemical concentrations detected in supplemental environmental samples collected at Site 08, the NUSC Disposal Area. Chemicals of potential concern (COPCs) for the SRI data set were selected by comparing the chemical concentrations measured in each media (soil, groundwater, surface water, and sediment) to EPA RSLs and EPA MCLs. Risk estimates were approximated for the SRI data set by comparing the chemical concentrations in the supplemental samples to the chemical concentrations in the RI data set, and then scaling off the risk estimates published for the RI data set to approximate risk estimates for the SRI data set.

This is a qualitative evaluation of the new (SRI) data to the site risks identified in the HHRA. In this step with the SRI data, no COPCs were eliminated based on comparison to Site-specific background values. In the HHRA portion of the RI (Tetra Tech 2010a), the cumulative risk was measured for the site-related COPCs and the background COPCs. This SRI does not change the conclusions of the HHRA already published in the RI. However, in accordance with Navy policy, COPCs identified in the risk assessment that are within background levels will not be carried forward as COCs for the development of Preliminary Remediation Goals (PRGs) in the FS. Soil types for the NUSC complex, as used in the background assessment, are presented on Figure 4-1.

Further evaluation of these SRI COPCs is conducted with consideration of other data from the RI in Section 6 of this SRI report.

4.1 DERIVATION OF SCREENING CRITERIA

The primary criteria used to identify COPCs are based on EPA RSLs (2010). The RSLs are based on exposure pathways for which generally accepted methods, models, and assumptions have been developed (e.g., ingestion, dermal contact, and inhalation) for specific land-use conditions and do not consider impact to groundwater or ecological receptors. The screening concentrations based on the RSLs correspond to a systemic hazard quotient (HQ) of 0.1 for non-carcinogens or an incremental lifetime cancer risk (ILCR) of 1×10^{-6} for carcinogens. The RSLs for non-carcinogens are based on an HQ of 1, whereas the screening concentrations used in the selection of COPCs in this SRI were based on an HQ of 0.1 to account for the potential cumulative effects of several chemicals affecting the same target organ or producing the same adverse non-carcinogenic effect.

The COPC screening levels used for each medium in the risk assessment are discussed below and are summarized in Table 4-1 and 4-2. No contaminants were detected in surface water; therefore, no

screening levels were identified for surface water. RIDEM's DECs for residential soil and "GA" objectives for groundwater are also presented. RIDEM's Remediation Regulations are potential Applicable or Relevant and Appropriate Requirements (ARARs) for the Site 08 cleanup and will be used during the development of PRGs in the FS.

Screening Levels for Soil and Sediment

RSLs for residential soil and soil to groundwater migration (EPA, 2010) were used to select COPCs for surface and subsurface soil and sediment. The risk-based screening levels used in the COPC selection for soil and sediment are presented in Table 4-1.

Soil and sediment concentrations were also compared to appropriate background concentrations presented in the *Background Study Report for Naval Station Newport* (Tetra Tech, 2008) and the *Background Soil Investigation Report for Site 08* (Tetra Tech, 2006).

Screening Levels for Groundwater

Screening levels based on the following criteria were used to select COPCs for groundwater:

- RSLs for tap water (EPA, 2010) (The screening levels for non-carcinogenic compounds were divided by 10 for a target HQ of 0.1)
- MCLs (EPA, 2009)
- EPA Groundwater Screening Levels for Evaluating the Vapor Intrusion into Indoor Air from Groundwater and Soils (EPA, 2002). (The screening values presented in the guidance are based on the MCL; Region 1 EPA requires that the screening criteria be risked-based. Therefore, the carcinogenic compound values have been adjusted for a $1x10^{-6}$ cancer risk level. The non-carcinogenic compound values are the screening level divided by 10 to correspond to a target HQ of 0.1).

The risk-based screening levels and health-based standards used in the COPC selection for groundwater are presented in Table 4-2.

4.2 SELECTION OF COPCS

COPCs were selected for surface soil, subsurface soil, groundwater, and sediment using the EPA risk-based COPC screening levels described in Section 4.1. COPC selection information for each

medium is presented in Tables 4-3 through 4-9. Chemicals identified as COPCs for each medium from the SRI data set are presented in Table 4-10.

Surface Soil

A comparison of maximum detected surface soil concentrations to screening levels based on residential soil RSLs is presented in Table 4-3. The following chemicals were detected at maximum concentrations exceeding direct contact risk-based COPC screening levels and were retained as COPCs for surface soil:

- SVOCs [benzo(a)anthracene, benzo(a)pyrene, benzo(k)fluoranthene, benzo(g,h,i)perylene, benzo(k)fluoranthene, chrysene, dibenzo(a,h)anthracene, indeno(1,2,3-cd)pyrene, and benzo(a)pyrene equivalents]
- Inorganics (aluminum, arsenic, beryllium, cobalt, iron, and manganese)

Each of the above-listed chemicals were retained as COPCs for surface soil in the RI report. The maximum detected concentrations of aluminum, cobalt, iron, and manganese exceeded the screening toxicity levels (set at a hazard index [HI] of 0.1); however, they do not exceed the RSLs. Concentrations of aluminum, arsenic, beryllium, cobalt, iron, and manganese were within the range of the background concentrations.

Subsurface Soil

A comparison of maximum detected subsurface soil concentrations to screening levels based on residential soil RSLs is presented in Table 4-4. The following chemicals were detected at maximum concentrations exceeding direct contact risk-based COPC screening levels and were retained as COPCs for subsurface soil:

- SVOCs [benzo(a)anthracene, benzo(a)pyrene, benzo(b)fluoranthene, dibenzo(a,h)anthracene, and benzo(a)pyrene equivalents];
- Inorganics (aluminum, arsenic, beryllium, cobalt, iron, and manganese).

The above-listed chemicals also were retained as COPCs for subsurface soil in the RI report. The maximum detected concentrations of aluminum, iron, and manganese exceeded the screening toxicity levels (set at an HI of 0.1); however, they do not exceed the RSLs. Concentrations of arsenic, beryllium, iron, and manganese were within the range of background concentrations.

Overburden-Bedrock Interface Groundwater

A comparison of maximum detected groundwater concentrations to screening levels based on RSLs for tap water and MCLs is presented in Table 4-5. The following chemicals were detected at maximum concentrations exceeding the COPC screening levels and were retained as COPCs for overburden-bedrock interface groundwater:

- VOCs (1,1,1-TCA, 1,1-DCA, 1,1-DCE, PCE, and TCE)
- Energetics (PGDN)

1,1,1-TCA, 1,1-DCA, 1,1-DCE, TCE, and PGDN were not retained as COPCs for the overburden-bedrock interface groundwater in the RI report. Concentrations of PGDN exceeded screening toxicity levels (set at an HI of 0.1) but did not exceed RSLs. Concentrations of TCE exceeded RSLs but were less than MCLs.

A comparison of maximum detected groundwater VOC concentrations to EPA screening levels for chemical migration from groundwater through building foundations and into indoor air is presented in Table 4-6. The following chemicals were detected at maximum concentrations exceeding the COPC screening levels and were retained as COPCs for overburden-bedrock interface groundwater:

- VOCs (1,1,1-TCA, 1,1-DCA, isopropylbenzene, PCE, and TCE).

1,1,1-TCA, 1,1-DCA, and isopropylbenzene were not previously retained as COPCs for vapor intrusion in the RI. The maximum detected concentrations of 1,1,1-TCA, 1,1-DCA, and isopropylbenzene exceeded the screening toxicity levels (set at an HI of 0.1); however, they do not exceed the screening levels based on an HI of 1.

Bedrock Groundwater

A comparison of maximum detected groundwater concentrations to screening levels based on tap water RSLs and MCLs is presented in Table 4-7. The following chemicals were detected at maximum concentrations exceeding the COPC screening levels and were retained as COPCs for bedrock groundwater:

- VOCs (1,1,1-TCA, 1,1,2-TCA, 1,1-DCA, 1,1-DCE, 1,2,4-trimethylbenzene, carbon tetrachloride, PCE, TCE, and vinyl chloride); and
- SVOCs (1,4-dioxane)

1,1,1-TCA, 1,1,2-TCA, 1,1-DCE were not retained as COPCs for the bedrock groundwater in the RI. Groundwater samples in the RI report were not analyzed for 1,4-dioxane. Concentrations of 1,1-DCE and 1,2,4-trimethylbenzene exceeded screening toxicity levels (set at an HI of 0.1) but did not exceed RSLs. Concentrations of carbon tetrachloride and PCE exceeded RSLs but were less than MCLs.

A comparison of maximum detected groundwater VOC concentrations to EPA screening levels for chemical migration from groundwater through building foundations and into indoor air is presented in Table 4-8. The following chemicals were detected at maximum concentrations exceeding the COPC screening levels and were retained as COPCs for bedrock groundwater:

- VOCs (1,1-DCA, 1,1-DCE, 1,2,4-trimethylbenzene, carbon tetrachloride, cis-1,2-DCE, PCE, TCE, and vinyl chloride).

1,1,1-DCA, 1,1-DCE, and cis-1,2-DCE were not retained as COPCs for vapor intrusion in the RI report. Concentrations of 1,1,-DCA, 1,1-DCE, 1,2,4-trimethylbenzene, and cis-1,2-DCE exceeded screening toxicity levels (set at an HI of 0.1) but did not exceed RSLs. Concentrations of carbon tetrachloride and PCE exceeded RSLs but were less than MCLs.

Sediment

A comparison of maximum detected sediment concentrations to screening levels based on residential soil RSLs is presented in Table 4-9. The following chemicals were detected at maximum concentrations exceeding direct contact risk-based COPC screening levels and were retained as COPCs for sediment:

- SVOCs [benzo(a)anthracene, benzo(a)pyrene, benzo(b)fluoranthene, chrysene, dibenzo(a,h)anthracene, indeno(1,2,3-cd)pyrene, and benzo(a)pyrene equivalents].

The above-listed chemicals also were retained as COPCs for sediment in the RI report. Concentrations of benzo(a)anthracene, benzo(a)pyrene, benzo(b)fluoranthene, chrysene, dibenzo(a,h)anthracene, and indeno(1,2,3-cd)pyrene were within the range of the background concentrations.

Surface Water

No selection of COPCs was required for surface water. There were no identified risks associated with surface water and there were no COPCs identified in the RI.

4.3 COMPARISON OF CONCENTRATIONS TO EXPOSURE POINT CONCENTRATIONS USED IN THE HUMAN HEALTH RISK ASSESSMENT

This section presents a comparison of chemical concentrations in the SRI samples to the results of the existing HHRA presented in the RI (Tetra Tech, 2010a) to give an approximate estimation of risks associated with the supplemental samples. Tables 4-11 through 4-15 present a comparison of the concentrations of COPCs and exposure point concentrations (EPCs) from the RI report to the concentrations of COPCs and EPCs in this SRI. Table 4-16 presents a summary of the cancer risks and hazard indices associated with reasonable maximum exposures from the RI Report.

EPA defines the range of $1x10^{-4}$ to $1x10^{-6}$ as the ILCR target range for sites addressed under CERCLA and the Resource Conservation and Recovery Act (RCRA). Individual or cumulative ILCRs greater than $1x10^{-4}$ are generally considered "unacceptable" by EPA and risk management decisions are necessary when the ILCR is within $1x10^{-4}$ to $1x10^{-6}$. EPA typically does not require remediation when the cumulative ILCR is less than $1x10^{-6}$. Similarly, cumulative ILCRs greater than $1x10^{-5}$ are considered to be "unacceptable" by the State of Rhode Island.

Under RIDEM regulations, residential and recreational scenarios are considered to be equivalent; therefore in the discussion below, an exceedence of the residential risk scenario is also an exceedence of the RIDEM recreational risk scenario.

Surface Soil

Table 4-11 presents a comparison of COPC concentrations for surface soil (RI versus SRI data). The EPCs for carcinogenic PAHs in surface soil samples collected from the exposed and paved areas during the RI are slightly less than those in surface soil samples collected in the SRI. EPCs for metals in surface soil samples collected from the exposed and paved areas during the RI are slightly greater than those collected in the SRI. As shown in Table 4-16, carcinogenic PAHs were the major contributors to the cancer risk for the exposed area surface soils evaluated in the RI report. Consequently, because the EPCs for carcinogenic PAHs are slightly greater in the SRI surface soil samples, the cancer risks for the SRI surface soil would be slightly greater than those calculated for exposed and paved area surface soil samples in the RI. Cumulative cancer risks for exposures to exposed area surface soils by hypothetical child and lifelong residents exceeded EPA's target risk range of 10^{-4} to 10^{-6} in the RI report and would also exceed EPA's target risk range for exposures to surface soil samples collected in the SRI. Benzo(g,h,i)perylene is a non-carcinogenic PAH identified as a COPC from the SRI data that was not identified as a COC in the RI. Benzo(g,h,i)perylene is not identified as a new COC because the range of concentrations detected in the SRI is within the range detected during the RI.

Cumulative non-cancer risks for exposures to surface soils were within acceptable levels for all receptors in the RI report and would also be within acceptable levels using analytical results for surface soil samples collected during the SRI.

Subsurface Soil

Table 4-12 presents a comparison of COPC concentrations for subsurface soil (RI versus SRI data). The EPCs for carcinogenic PAHs in subsurface soil samples collected from the exposed area during the RI are over 2,500 times greater than those calculated for the SRI samples taken from the same area. Similarly, EPCs for subsurface soil samples collected from the paved area are over an order of magnitude greater than those collected from the same area during the SRI. EPCs for metals in subsurface soil samples collected from the exposed and paved areas during the RI are similar to those collected during the SRI. As shown in Table 4-16 (estimates from the RI), carcinogenic PAHs were the major contributors to the cumulative cancer risk for the exposed area and paved area subsurface soils. Consequently, since the EPCs for the supplemental investigation samples are so much lower than the EPCs calculated for the RI samples, the associated risk estimates for SRI data would be less than the risk estimates determined using the RI data. The EPC for arsenic for the RI samples approximates that calculated for the SRI samples. With the exception of the construction worker, risk estimates presented in the RI for all receptors hypothetically exposed to the COPCs in subsurface soils exceeded the EPA's target cancer risk range (10^{-4} to 10^{-6}).

Cumulative non-cancer risks from exposures to subsurface soil for all receptors evaluated in the RI were within acceptable levels and would also be within acceptable levels if EPCs for subsurface soil samples collected during the SRI were evaluated.

Groundwater

Groundwater was evaluated as one exposure unit in the HHRA. Table 4-13 presents a comparison of COPC concentrations for groundwater (RI versus SRI data). EPCs calculated for 1,1-DCA and TCE based on the SRI groundwater dataset exceed those calculated for the RI groundwater dataset. In contrast, EPCs calculated for 1,2,4-trimethylbenzene, PCE, and vinyl chloride using the RI dataset are greater than those calculated for samples collected during the SRI. In addition, 1,1,1-TCA, 1,1,2-TCA, and 1,1-DCE were identified as COPCs for groundwater samples collected during the SRI but were not identified as COPCs for groundwater samples collected during the RI. As shown in Table 4-16, VOCs were the major contributors to the cumulative cancer risk for groundwater.

Cumulative cancer risks presented in the RI for residents hypothetically using the groundwater for domestic purposes exceeded EPA's target risk range. Risk estimates would also exceed these benchmarks if COPC concentrations in the groundwater samples collected during the SRI were evaluated.

Cumulative cancer risks presented in the RI for construction workers exposed to groundwater did not exceed EPA's target risk range. Estimates developed based on COPC concentrations detected in the SRI samples would also not exceed EPA's target risk range.

Cumulative non-cancer risks presented in the RI for construction workers and hypothetical residents exposed to groundwater exceeded EPA acceptable levels. Metals were the major contributors to the unacceptable, cumulative non-cancer risks for construction workers and hypothetical residents. However, groundwater samples collected during the SRI were not analyzed for metals.

As discussed in Section 4.2, several VOCs were detected in groundwater samples collected during the SRI at concentrations exceeding the EPA screening levels for chemicals that may volatilize from groundwater and migrate through building foundations and into indoor air of a building. Groundwater samples were collected from the overburden-bedrock interface (approximately 10 feet bgs) and the bedrock (approximately 30 feet bgs). EPA's vapor intrusion guidance (2002) recommends that groundwater samples be collected from wells screened at or across the top of the water table. The samples collected from the overburden-bedrock interface were collected from wells screened across the top of the water table. Therefore, the groundwater samples collected from the overburden-bedrock interface are the samples which would be used to evaluate the vapor intrusion pathway.

Table 4-14 presents a comparison of COPC concentrations for groundwater (RI versus SRI data). The compounds 1,1,1-TCA, 1,1-DCA, and isopropylbenzene were not detected in the overburden-bedrock groundwater samples collected during the RI. As noted above in Section 4.2, the maximum detected concentration of these chemicals exceeded the adjusted screening criteria based on an HI of 0.1 but were less than the unadjusted screening criteria based on an HI of 1. The cumulative non-cancer risk for these chemicals would be within EPA acceptable levels. EPCs for PCE and TCE based on the SRI groundwater dataset are approximately four times higher than those based on groundwater samples collected during the RI. The cumulative cancer risk estimated in the RI report for exposures to VOCs migrating from groundwater to the indoor air of a building was 6×10^{-7} for hypothetical residents and 4×10^{-7} for industrial workers. The cumulative cancer risks based on groundwater samples from the SRI would be approximately 2.4×10^{-6} for hypothetical residents and 1.6×10^{-6} for industrial workers, which are within EPA's target risk range.

Sediment

Table 4-15 presents a comparison of COPC concentrations for sediment (RI versus SRI data). EPCs for carcinogenic PAHs in sediment samples collected during the RI are one to two times greater than those in sediment samples collected in the SRI. As shown in Table 4-16, cumulative cancer risks presented in the RI for recreational users exposed to sediments were within EPA target risk range. Consequently, since the EPCs for carcinogenic PAHs in the supplemental data set are less than those calculated for samples collected during the RI, the cumulative cancer risks for the sediment samples collected during the SRI would be also be within the EPA target risk range.

Cumulative non-cancer risks were within acceptable levels for all receptors in the RI report and would also be within acceptable levels for sediment samples collected during the SRI.

4.4 UPDATED TOXICITY CRITERIA FOR 1,4-DIOXANE

1,4-Dioxane was evaluated in this analysis using the screening criteria presented on the May 2010 RSL table. On August 11, 2010, EPA issued a new oral cancer slope for 1,4-dioxane. The previously published oral cancer slope factor was 0.011 $(mg/kg/day)^{-1}$ and the new oral cancer slope factor is 0.1 $(mg/kg/day)^{-1}$. The current tap water RSL of 6.1 µg/L used in this analysis is based on the previous oral cancer slope factor. A RSL based on the new oral cancer slope factor would be 0.67 µg/L.

1,4-Dioxane was not detected in groundwater from the overburden-bedrock groundwater interface. Concentrations of 1,4-dioxane exceeded the current RSL in 1 of 14 bedrock groundwater samples. Concentrations of 1,4-dioxane would exceed the RSL based on the new oral cancer slope factor in five bedrock groundwater samples. The maximum detected concentration of 1,4-dioxane was 8.3 µg/L, which would correspond to a cancer risk of approximately 1×10^{-5} based on the revised oral cancer slope factor. The cancer risk of 1,4-dioxane based on the revised cancer slope factor is within EPA's target risk range but since the cumulative risk from exposure to all chemicals in groundwater exceeds EPA's target risk range 1,4-dioxane would be retained as a COC in bedrock groundwater.

4.5 SUMMARY

This screening level HHRA for Site 08 was conducted to estimate potential risks to likely human receptors exposed to the media sampled in the SRI. COPCs were identified for surface soil, subsurface soil, groundwater, and sediment. Chemicals identified as COPCs from the SRI data set are summarized in Table 4-10.

Cancer and non-cancer risks were estimated by comparing COPC concentrations in samples collected during the SRI to the results of the HHRA present in the RI report. Cancer risks for the following receptors would exceed EPA's target risk range of 10^{-4} to 10^{-6} and RIDEM cumulative risk benchmark of 1×10^{-5}.

Medium	Cumulative Cancer Risk Exceeding EPA's Target Risk Range of 10^{-4} to 10^{-6}	Cumulative Cancer Risk Exceeding RIDEM's Cumulative Risk Level of 10^{-5} (a)
Surface Soil	Hypothetical Child Residents Hypothetical Lifelong Residents	Industrial Workers Child Recreational Users Lifelong Recreational Users Hypothetical Child Residents Hypothetical Adult Residents Hypothetical Lifelong Residents
Subsurface Soil	Cancer risks within target range	Hypothetical Child Residents Hypothetical Adult Residents Hypothetical Lifelong Residents
Groundwater	Hypothetical Child Residents Hypothetical Adult Residents Hypothetical Lifelong Residents	Hypothetical Child Residents Hypothetical Adult Residents Hypothetical Lifelong Residents
Sediment	Cancer risks within target range	Cancer risks less than acceptable level

(a) Under RIDEM regulations, residential and recreational scenarios are considered to be equivalent; therefore in the discussion below, an exceedence of the residential risk scenario is also an exceedence of the RIDEM recreational risk scenario.

Non-cancer risks for all receptors exposed to COPCs in surface soil, subsurface soil, groundwater, and sediment would be within EPA acceptable levels.

5.0 ECOLOGICAL RISK ASSESSMENT RE-EVALUATION

This section provides an evaluation of SRI data with respect to the ecological risk assessment (ERA) conducted as a part of the RI (Tetra Tech, 2010a). The purpose of this evaluation is to determine whether the SRI data are similar to the data used and in the RI, and if not, to determine whether the new data might indicate an increased ecological risk.

To conduct this evaluation, the maximum chemical concentrations in the SRI samples were first compared to the maximum chemical concentrations in the RI samples. Then, if applicable, the SRI data were compared to the site-specific no observable effect concentrations (NOECs) that were developed as part of the RI. No chemicals were detected in surface water collected as part of the SRI; therefore, surface water is not discussed in this section.

5.1 SEDIMENT

Three sediment samples were collected in Deerfield Creek during the SRI and were analyzed for TCL VOCs and TCL SVOCs. Table 5-1 presents the comparison of these samples to the previous RI samples.

The maximum detected concentrations for the VOCs 1,1-DCA and carbon disulfide were greater in the SRI samples than the RI samples. The maximum 1,1-DCA concentration (3.7 µg/kg) is less than the ecological screening level (27 µg/kg); therefore, adverse impacts to sediment invertebrates are not expected from 1,1-DCA. The maximum detected concentration of carbon disulfide exceeds the ecological screening level; however, the maximum concentration of carbon disulfide in the RI sample also exceeded the screening level. Carbon disulfide was eliminated as a COPC in the RI because it is a common laboratory contaminant (Appendix D); therefore, the one detection of carbon disulfide in the SRI sample does not change the conclusions of the ERA.

High molecular weight PAHs and total PAHs had maximum concentrations greater than their respective NOECs; however, the maximum concentrations for both of these PAH groups are much less than their maximum concentrations in the RI samples. Therefore, impacts to sediment invertebrates from high molecular weight PAHs and total PAHs are expected to be similar or less than those presented in the RI report.

5.2 SURFACE SOIL

Four additional sediment samples were collected for use in the data comparison evaluation. One sample (127B-S-1-070910-0-2) was analyzed for TCL VOCs only, while the other samples were analyzed for TCL VOCs, TCL SVOCs, TCL pesticides/PCBs, TAL metals, and PGDN. Table 5-2 presents the comparison of these samples to the previous RI samples.

The maximum concentrations for 2-butanone and potassium were greater in these samples than the RI samples. For 2-butanone, the maximum concentration (17.5 µg/kg) slightly exceeded the maximum concentration from the samples collected during the RI (12 mg/kg). An ecological screening level is not available for 2-butanone. However, 2-butanone was eliminated as a COPC in the RI because the maximum detected concentration was less than the screening levels for the other VOCs and it was only detected in 3 of 74 samples (4 percent). Also, 2-butanone is a typical laboratory contaminant (Appendix D). Therefore, the conclusion that risks to ecological receptors are not expected from 2-butanone does not change based on the SRI data.

Chloroform, 1,1,1-TCA, di-n-butyl phthalate, endosulfan sulfate, gamma-BHC, and hexachlorobenzene were detected in the SRI samples, but were not detected in the samples collected during the RI. The maximum concentrations of 1,1,1-TCA, chloroform, di-n-butyl phthalate, and hexachlorobenzene were less than their respective screening levels (Table 5-2); therefore, no unacceptable risk form these chemicals is expected. Endosulfan sulfate and gamma-BHC had maximum concentrations (11 µg/kg and 8.72 µg/kg, respectively), which exceed their screening levels.

The screening level for endosulfan sulfate (0.01 µg/kg) is based on the Dutch Ministry of Housing, Spatial Planning, and the Environment (MHSPE) target value (TV) for endosulfan. MHSPE TVs are the soil quality levels that are ultimately desired (MHSPE, 2000), and are highly conservative. The MHPSE Intervention Values (IV) are the “concentration levels of the contaminants in the soil above which the functionality of the soil for human, plant, or animal life is seriously impaired or threatened” (MHSPE, 2000). The MHSPE IV for endosulfan sulfate is 4,000 µg/kg. The maximum concentration of endosulfan sulfate, although greater than the TV, is much less than the IV. Additionally, the only other detected concentration was much less than the maximum concentration (1.35 µg/kg). Therefore, potential impacts from endosulfan sulfate are expected to be minimal.

The screening level for gamma-BHC (0.0005 µg/kg) is also based on the Dutch TV. An IV is not available for gamma-BHC; however, the IV for total BHCs is 2,000 µg/kg. The maximum concentration (8.72 µg/kg) although greater than the TV, is much less than the IV. Considering these pesticides were

not detected in any of the 74 surface soil samples evaluated in the RI, this evaluation indicates that adverse impacts to ecological receptors from endosulfan sulfate and gamma-BHC are not expected.

Only molybdenum had a maximum concentration greater than the NOEC that was developed during the RI. The detected concentration of molybdenum (1.12 mg/kg) is less than the screening level (2 mg/kg). Additionally, the detected concentration was much less than the maximum concentration of the RI samples (7.6 mg/kg). Therefore, risks to ecological receptors from molybdenum do not change based on the SRI data.

5.3 ERA RISK UPDATE SUMMARY AND CONCLUSION

The ecological risks from the RI report (Tetra Tech, 2010a) were re-evaluated based on the analytical results of three additional sediment samples and four additional surface soil samples that were collected during the SRI. Maximum concentrations from the SRI sampling event were compared to the maximum concentrations for samples collected during the RI investigation (if detected in the RI), the ecological screening level, and site-specific NOECs that were developed as part of the RI, if available.

Based on this re-evaluation, the overall risk conclusions from the ERA presented in the RI report do not change.

6.0 SUMMARY AND CONCLUSIONS

This SRI was performed to update and further characterize Site 8 contamination associated with the Building 179 CUST Area. In addition, this SRI was performed to acquire additional environmental data regarding the contamination at the NUSC Disposal Area in order to support the FS. The results of the SRI are summarized below. This section also presents an update to the selection of CERCLA COPCs to be forwarded to the FS.

6.1 NORTH MEADOW VOC PLUME

Figure 6-1 shows a cross-sectional view of the TCE plume in the North Meadow, perpendicular to the direction of groundwater flow. The SRI refined the CSM for the North Meadow as follows:

- As indicated by the presence of TCE in shallow groundwater samples collected near the northern edge of NUWC Pond, the VOC plume extends further north than previously delineated.

- The portion of the VOC plume with the highest TCE concentrations is in the vicinity of the new monitoring well MW-128B (TCE concentration of 1,206 µg/L).

- As indicated by decreasing concentrations of TCE over time in the more southern wells (MW-03B and MW-117B), and increasing concentrations of TCE over time in the more northern well (MW-118B), the TCE plume appears to be moving in a northerly or northwesterly direction with groundwater flow.

- TCE concentrations appear to decrease with depth.

- Based on the available data, geochemical conditions generally do not indicate conditions conducive for anaerobic reductive dechlorination; however, the presence of TCE breakdown products indicates that reductive dechlorination is occurring in some locations.

- A trace amount of 1,4-dioxane was detected in groundwater in the North Meadow (maximum concentration estimated at 0.42 µg/L, which does not exceed the RSL of 0.67 µg/L).

6.2 BUILDING 179 CUST AREA

Figure 6-2 shows a cross-sectional view of the 1,1,1-TCA plume in the Building 179 area, generally along the direction of groundwater flow. The SRI data provided the following information for the Building 179 CUST Area:

- The highest concentration of the CVOC plume in the Building 179 area still exists in the vicinity of the former release area (i.e., by MW-7A/B).

- The Building 179 CVOC plume extends from the former CUST toward the north and Deerfield Creek.

- 1,4-Dioxane is present in groundwater at concentrations ranging from an estimated concentration of 0.54 µg/L to 8.3 µg/L. The RSL was exceeded at one location (well MW-09B). The maximum concentration occurs in the northern (downgradient) portion of the Building 179 CUST area and decreases toward the leading edge of the plume moving north.

- At one location (MW-9B), a trace concentrations of cyanide was detected (5.6 J µg/L) slightly above the project action limit (5.2 µg/L) which was based upon the EPA National Recommended Water Quality Criteria (NRWQC) for fresh surface water; however, it did not exceed the MCL (200 µg/L).

- The bedrock groundwater geochemistry data show favorable reducing conditions to support anaerobic biodegradation of CVOCs.

- The overburden groundwater geochemistry data also indicate the possibility of anaerobic biodegradation of CVOCs.

- Contaminants were not detected in surface water in this area.

- PAHs, carbon disulfide, and TPH were detected in sediment samples in this area.

6.3 BUILDING 185 COMPLEX

The SRI data from this area indicates the following:

- The Otto Fuel component PGDN was not detected above RSLs in soil or groundwater.

- Groundwater and soil data suggest no historical releases from floor drains in the complex.

- Groundwater data between the Building 185 Area and the North Meadow show a decrease in CVOC concentrations from the south to north, suggesting migration of the CVOC plume in a northerly direction along the Deerfield Creek channel.

6.4 RISK ASSESSMENTS

In accordance with agreements with EPA and RIDEM, the new data set from this SRI was not used to recalculate risks already quantified in the RI, but the new data were screened against previous data to make an approximate risk estimate for the supplemental data set. This effort resulted in a qualitative determination as to whether additional COCs should be identified for consideration for PRG development in the FS (Section 4 of this SRI).

1,4-Dioxane was detected in groundwater at several locations in the SRI. Because this constituent was not sought in the original RI, risk was not calculated for it. Based on the published toxicity values, it is presumed that 1,4-dioxane will be included as a COPC based on this SRI data and risk calculation is not required.

Other COPCs identified in the SRI risk screening step had previously been identified as COPCs for the same receptors, and some COPCs had previously been identified as COPCs but for different receptors. In both of these cases, the candidate COPCs are not new COPCs and are already identified to be carried forward for PRG consideration.

However, some of the candidate COPCs identified in the SRI risk screening were not previously identified as COPCs in the RI, and were therefore further evaluated for inclusion as a COPC for the Site. This evaluation is summarized below:

Constituent (Shaded on Table 4-10)	Media	Data Evaluation	Retained as a new COPC?
1,1,1-TCA	Groundwater	SRI data are outside the range of RI data and also exceeds MCL	Yes
1,1,2-TCA	Groundwater	SRI data are similar to RI data	No
1,1-DCE	Groundwater	SRI data are outside of the range of RI data and also exceeds MCL	Yes
cis-1,2-DCE	Groundwater	SRI data are within the RI data range	No
Isopropylbenzene	Groundwater	SRI data are within the RI data range	No
1,4-Dioxane	Groundwater	Not analyzed/evaluated in the RI; presumed COPC in the SRI based on toxicity values	Yes
PGDN	Groundwater	Not detected in the RI; only one trace detection below screening levels during the SRI	No
Benzo(g,h,i)perylene	Surface Soil	SRI data are within the RI data range	No

Constituent (Shaded on Table 4-10)	Media	Data Evaluation	Retained as a new COPC?
Beryllium	Surface Soil	SRI data are within the RI data range	No
Beryllium	Subsurface Soil	SRI data are within the RI data range	No

Concentrations of 1,1,2-TCA, cis-1,2-DCE, and isopropylbenzene measured in groundwater and benzo(g,h,i)perylene and beryllium measured in soil during the SRI fall within the ranges previously detected in the RI for the respective media. Concentrations of 1.1.1-TCA and 1.1-DCE measured in groundwater during the SRI are greater than previously detected in the RI.

Constituent	Media	RI Data Range	SRI Data Range
1,1,1-Trichloroethane	Groundwater	0.4 – 4 µg/L	0.29 – 440 µg/L
1,1,2-Trichloroethane	Groundwater	0.3 µg/L (one detection)	0.48 µg/L (one detection)
1,1-DCE	Groundwater	0.5 – 7 µg/L	0.45 – 52 µg/L
cis-1,2-DCE	Groundwater	0.3 – 26 µg/L	0..37 – 26 µg/L
Isopropylbenzene	Groundwater	0.5 – 94 µg/L	0.51 – 1.3 µg/L
Benzo(g,h,i)perylene	Surface Soil	3 – 7,400 µg/kg	13 – 1,350 µg/kg
Beryllium	Surface Soil	0.21 – 0.74 µg/kg	0.205 – 0.43 µg/kg
Beryllium	Subsurface Soil	0.2 – 2.5 µg/kg	0.3 – 0.6 µg/kg

No further risk evaluation is needed for 1,1,2-TCA, cis-1,2-DCE, isopropylbenzene, benzo(g,h,i)perylene, and beryllium given that these constituents have been previously evaluated in the RI at the same (or higher) concentrations and were screened out of the risk assessment. 1,4-dioxane is of new interest because it is a contaminant with high toxicity, high solubility, high mobility, and was detected in several SRI groundwater samples exceeding the newly published RSL of 0.67 µg/L. Similarly, 1,1,1-TCA and 1,1-DCE will be retained as COPCs because analytical results from the SRI show that the maximum concentration of each of these compounds are higher than those detected in the RI and exceed MCLs.

6.5 REFINEMENT OF COPCS

Because COCs were directly from the standardized risk calculation performed in the RI, there has been only limited consideration up to this point regarding presence in background or reference data, frequency of detection, presence of the constituents above target risk levels, and representativeness of the CERCLA-release contaminants that are related to the site. As a step prior to development of PRGs, the COPCs were reviewed using the RI and SRI data and background data, as well as consideration of naturally occurring elements and an evaluation of contaminants related to CERCLA releases. The purpose of this review is to determine which COPCs were appropriate to forward as COCs to the FS for PRG development.

In this COPC refinement process, the COPCs identified in the RI were compared to (1) the target risk values calculated from the risk assessment, and (2) to an appropriate background concentration (although no background data have been identified for groundwater). The representative site concentration was selected as the 95 percent upper confidence limit (95% UCL) of the available data set which includes both the RI and the SRI data.

Tables 6-1 through 6-5 present a refinement of COPCs and selection of CERCLA COCs that are recommended to be carried forward for development of PRGs in the FS. These tables are presented by media and receptor. The refinement step uses maximum and representative site values (e.g., 95% UCL), and compares those values to target risk levels (determined by calculation in the RI) and background concentrations documented previously.

Based on the refinement step, Table 6-6 summarizes the COCs to be carried forward to the FS for PRG development. By developing PRGs for the COCs selected, a Remedial Action can be designed and implemented directed at site-related CERCLA COCs for Site 08.

For surface water, no further COPC refinement was required. There were no identified risks associated with surface water and there were no COPCs identified in the RI.

In groundwater, arsenic and manganese area retained as COCs; however, they are associated with a "secondary release" at Site 08. Naturally-occurring arsenic and manganese in Site soil was likely mobilized to groundwater due to the reducing conditions resulting from the primary release of contaminants to the subsurface.

Chromium also is being retained as a groundwater COC at this time. As a conservative measure for risk evaluation, all the chromium was assumed to be present as hexavalent chromium (Cr^{6+}) rather than as the less toxic form, trivalent chromium (Cr^{3+}). Additional sampling may be conducted in the future to determine the actual speciation of chromium at Site 08. The risk evaluation would then be updated accordingly to determine whether chromium should be retained as a groundwater COC (i.e., likely would not be a groundwater COC if predominantly present as trivalent chromium).

In sediment, arsenic and benzo(a)pyrene were identified as human health COPCs but were not retained as COCs for the FS. The concentrations of arsenic and benzo(a)pyrene in sediment are within the range of background concentrations (Table 6-3). Also, the risks estimated in the HHRA for lifelong recreational users exposed to benzo(a)pyrene and arsenic in sediment are comparable to risks associated with background levels of these chemicals. The ILCRs estimated in the HHRA for lifetime recreational users were $1x10^{-5}$ for benzo(a)pyrene and $5x10^{-6}$ for arsenic. The ILCRs for lifetime recreational users exposed

to background concentrations of benzo(a)pyrene would be $2x10^{-5}$ based on the maximum concentration and $9x10^{-6}$ based on the average concentration. The ILCRs for lifetime recreational users exposed to background concentrations of arsenic would be $1x10^{-5}$ based on the maximum concentration and $6x10^{-6}$ based on the average concentration. The ILCRs from arsenic and benzo(a)pyrene in sediment at this site are similar to background ILCRs for these constituents; therefore, arsenic and benzo(a)pyrene can be eliminated as sediment COCs for human health.

TABLES

TABLE 2-1
GROUNDWATER SAMPLING STABILIZATION RECORD
SITE 08, NUSC DISPOSAL AREA
SUPPLEMENTAL REMEDIAL INVESTIGATION REPORT
NAVAL STATION NEWPORT, RHODE ISLAND

Well ID	Sample ID	Sample Date	Depth Sampled	Pump Type Bladder/ Peristaltic	Time Of Reading	Water Depth Below MP (ft)	Purge Rate (mL/min)	Cum. Volume Purged (gal)	Temp (^{o}C)	Spec. Cond. (mS/cm)	pH	ORP (mV)	DO (mg/L)	Turbidity (NTU)	Comments
MW-03B	DA-MW03B-062810	6/28/2010	25	Micro bladder	1113	23.70	100	0.5	22.41	0.265	6.21	203.4	2.91	3.00	Cloudy initially
MW-04B	DA-MW-04B-063010	6/30/2010	30	Micro bladder	1133	18.69	45	0.75	16.74	0.345	7.00	-2.4	1.31	4.45	
MW-6A	DA-MW6A-062310	6/23/2010	10.8	Peristaltic	1152	DRY	100	1.2	17.73	0.153	6.37	-43.0	0.65	111	Cloudy; Well went dry, let recharge 80% before sampling
MW-6B	DA-MW-6B-061710	6/17/2010	30.4	Bladder	1700	11.00	100	1.5	16.25	0.429	9.27	144.7	9.12	156	Cloudy initially
MW-7A	DA-MW-7A-062310	6/23/2010	7.4	Peristaltic	1548	6.75	100	2.0	19.56	0.443	6.06	-60.0	0.88	2.68	
MW-7B	DA-MW-7B-062210	6/22/2010	23.7	Bladder	11.05	6.47	100	1.7	17.83	0.247	7.65	-176.8	0.31	139	
MW-8A	DA-MW08A-062910	6/29/2010	6.6	Peristaltic	1035	7.45	100	1.0	20.63	0.370	6.20	-29.6	4.68	24.2	
MW-8B	DA-MW8B-062210	6/22/2010	12.1	Bladder	1140	6.20	100	3.5	15.27	0.271	7.32	-188.0	0.43	66.2	
MW-9B	DA-MW09B-062910	6/29/2010	18	Bladder	1200	11.72	80	3.0	22.14	0.614	7.26	-304.2	0.75	17.7	Reached end of 2-hr sampling limit before stabilization
MW-11	DA-MW-11-062910	6/29/2010	10.9	Peristaltic	1325	DRY	100	NR	19.68	0.587	6.12	34.2	1.83	11.60	Well went dry, let recharge 80% before sampling
MW-12	DA-MW-12-063010	6/30/2010	5.3	Peristaltic	1400	3.95	150	2.0	19.72	0.227	5.46	113.0	1.18	1.62	
MW-13B	DA-MW-13B-063010	6/30/2010	18	Bladder	1548	4.35	140	5.0	13.38	0.331	7.81	-214.3	0.24	65.40	
MW-101B	DA-MW101B-062310	6/23/2010	45	Bladder	1605	12.35	100	1.7	19.09	0.605	7.33	69.1	1.09	48.6	
MW-103B	DA-MW-103B-070110	7/1/2010	34.9	Bladder	1055	17.95	100	5.0	12.38	0.452	6.97	-202.9	0.48	147	
MW-104B	DA-MW104B-061810	6/18/2010	32.5	Bladder	1322	15.50	150	3.5	14.92	0.344	6.77	-34.9	0.71	52.7	
MW-105B	DA-MW-105B-062810	6/28/2010	35	Bladder	1132	18.45	160	4.0	13.90	0.337	6.60	-14.4	0.61	9.37	
MW-116-D1	DA-GW-MW116-D1-0810	8/6/2010	25	Bladder	1025	9.51	85	2.0	17.40	0.218	5.98	-3.5	1.03	4.64	
MW-116B-D2	DA-MW116B-D2-0810	8/6/2010	35	Peristaltic	0941	9.80	150	2.5	15.71	0.228	6.41	-20.7	0.30	0.15	
MW-117B-D1	DA-MW117B-D1-0810	8/11/2010	25	Bladder	1030	22.90	125	2.0	14.39	0.201	7.95	-30.0	0.27	0.00	
MW-117B-D2	DA-MW-117B-D2-0810	8/11/2010	34	Bladder	1010	23.18	200	2.4	14.02	0.248	6.07	-20.3	0.25	1.74	
MW-118-D1	DA-MW118-D1-0810	8/10/2010	32	Bladder	1530	27.07	150	4.0	15.90	0.283	6.08	44.8	1.56	29.9	
MW-118-D2	DA-MW118-D2-0810	8/10/2010	42	Peristaltic	1503	26.40	150	2.0	14.98	0.195	6.16	68.7	0.37	0.00	
MW-122	DA-MW-122-063010	6/30/2010	5.82	Peristaltic	1050	4.30	150	2.0	16.09	0.329	6.18	-32.1	0.60	0.00	
MW-124B	DA-MW124B-0810	8/11/2010	45	Bladder	1441	6.00	80	2.0	MW	0.542	6.44	-75.1	0.40	7.86	
MW-127B	DA-MW-127B-081010	8/10/2010	41	Bladder	1008	22.84	160	4.5	13.60	0.390	6.44	-33.1	0.50	5.37	
MW-128B	DA-MW-128B-0810	8/9/2010	40	Bladder	1410	24.65	150	4.8	13.38	0.348	6.29	34.8	0.20	3.10	
MW-129B	DA-MW129B-0810	8/10/2010	13.5	Bladder	1040	5.20	200	7.0	15.56	0.651	6.63	35.7	0.25	0.00	
MW-130B	DA-MW130B-0810	8/9/2010	23	Bladder	1533	7.20	130	6.0	18.22	0.918	6.41	78.3	2.69	20.1	

Notes:
1. NR = Not Recorded on Field Form

TABLE 3-1
GROUNDWATER ELEVATION SUMMARY
SITE 08, NUSC DISPOSAL AREA
SUPPLEMENTAL REMEDIAL INVESTIGATION
NAVAL STATION NEWPORT, RHODE ISLAND

Well Identification	Date	Reference Point for Depth to Water	Top of Casing Elevation (ft)	Top of PVC Elevation (ft)	Ground Elevation (ft)	Depth to Water (ft)	Groundwater Elevation (ft)
MW-01C (Note 2)	8/5/2010	TPVC	NA	52.63	NA	13.50	39.13
MW-03B	8/5/2010	TPVC	47.36	47.19	44.00	23.75	23.44
MW-04B	8/5/2010	TPVC	49.07	48.78	NA	17.90	30.88
MW-06A	8/5/2010	TPVC	NA	62.51	58.86	10.20	52.31
MW-06B	8/5/2010	TOC	62.6	NA	62.10	10.35	52.25
MW-07A	8/5/2010	TPVC	NA	56.32	56.76	6.11	50.21
MW-07B	8/5/2010	TOC	56.21	NA	56.77	6.55	49.66
MW-08A	8/5/2010	TPVC	NA	53.06	50.02	5.45	47.61
MW-08B	8/5/2010	TOC	53.69	NA	42.59	6.12	47.57
MW-9A	8/5/2010	TPVC	54.20	54.02	50.0	DRY	<44.25 (DRY)
MW-9B	8/5/2010	TOC	53.46	50.76	50.0	7.95	45.51
MW-10	8/5/2010	TPVC	NA	53.86	50.23	5.60	48.26
MW-11	8/5/2010	TPVC	NA	59.56	59.56	9.20	50.36
MW-12	8/5/2010	TPVC	50.23	49.17	46.70	3.75	45.42
MW-13A	8/5/2010	TPVC	51.59	51.49	47.80	4.55	46.94
MW-13B	8/5/2010	TOC	51.30	49.98	47.70	4.55	46.75
MW-100B	8/5/2010	Unable to remove road box cover to obtain water level reading.					
MW-101B	8/5/2010	TOC	51.74	51.48	51.70	11.90	39.84
MW-102B	8/5/2010	TOC	52.55	NA	50.80	14.50	38.05
MW-103B	8/5/2010	TOC	50.90	NA	48.80	16.99	33.91
MW-103S	8/5/2010	TPVC	51.02	50.81	48.70	17.12	33.69
MW-104B	8/5/2010	TOC	50.41	NA	48.40	14.88	35.53
MW-105B	8/5/2010	TOC	49.13	NA	47.20	18.45	30.68
MW-106B	8/5/2010	TOC	57.81	57.72	57.80	3.60	54.21
MW-106S	8/5/2010	TPVC	57.85	57.38	57.90	4.80	52.58
MW-107B	8/5/2010	TOC	53.41	52.97	53.40	5.87	47.54
MW-108B	8/5/2010	Bee's nest prevented obtaining a water level reading.					
MW-109B	8/5/2010	TOC	51.10	50.65	51.10	8.00	43.10
MW-110B	8/5/2010	TOC	49.83	NA	47.90	13.71	36.12
MW-111B	8/5/2010	TOC	51.86	NA	50.60	12.48	39.38
MW-112S	8/5/2010	TPVC	52.68	52.55	50.00	14.53	38.02
MW-112B	8/5/2010	TOC	51.86	NA	49.70	13.85	38.01
MW-113B	8/5/2010	TOC	51.91	NA	50.00	13.57	38.34
MW-114B	8/5/2010	TOC	45.55	NA	43.40	21.45	24.10
MW-115B	8/5/2010	TOC	45.27	NA	43.10	7.37	37.90
MW-116B-D1	8/5/2010	TPVC	47.21	47.02	45.10	9.32	37.70
MW-116B-D2	8/5/2010	TPVC	47.83	47.5	46.23	9.65	37.85
MW-117B-D1	8/5/2010	TPVC	46.53	46.29	44.70	22.88	23.41
MW-117B-D2	8/5/2010	TPVC	47.01	46.79	45.00	23.20	23.59
MW-118B-D1	8/5/2010	TPVC	50.07	49.81	47.80	26.35	23.46
MW-118B-D2	8/5/2010	TPVC	50.13	49.91	47.8	26.3	23.61
MW-120B	8/5/2010	TOC	47.37	NA	45.00	22.75	24.62
MW-122	8/5/2010	TPVC	32.29	31.75	28.70	5.00	26.75
MW-123	8/5/2010	TPVC	33.56	33.46	29.80	7.07	26.39
MW-124B	8/5/2010	TOC	48.95	NA	47.10	4.40	44.55
MW-125B	8/5/2010	TOC	51.96	51.50	52.00	6.51	45.45
MW-127B	8/5/2010	TPVC	45.37	45.16	43.20	22.80	22.36
MW-128B	8/5/2010	TPVC	48.43	48.29	45.90	24.65	23.64
MW-129B	8/5/2010	TOC	53.27	53.03	53.00	4.85	48.42
MW-130B	8/5/2010	TOC	45.2	44.75	44.8	6.6	38.60

Notes:

1. The newly installed wells were surveyed by Louis Federici Associates on September 17, 2010. Horizontal NAD 1983, Vertical Datum = NGVD 1929

2. Former well MW-01B that was installed as part of the SASE in 2003 was destroyed during soil removal activities and was replaced in 2006 (by TN Associates, using New England Boring Contractors of CT., Inc.) The MW-01B screened interval was approximately 10 to 39 feet below ground surface (bgs), however, the "replacement well" MW-01C screened interval is approximately 30 to 40 feet bgs.

TPVC = Top of PVC riser pipe
TOC = Top of protective casing
NA = Not Available
ft = feet
bgs = below ground surface

TABLE 3-2
GROUNDWATER ANALYTICAL RESULTS
SITE 08, NUSC DISPOSAL AREA
SUPPLEMENTAL REMEDIAL INVESTIGATION REPORT
NAVAL STATION NEWPORT, RHODE ISLAND
PAGE 1 OF 2

	SAMPLE ID	Benchmarks				GW-B185A3-SB1	DA-DW-15-0610	DA-DW-16-0610	DA-MW-03B-062810-AVG	DA-MW-04B-063010	DA-MW6A-062310	DA-MW6B-061710	DA-MW7A-062210	DA-MW7B-062310	DA-MW-08A-062910	DA-MW8B-062210	DA-MW-09B-062910	DA-MW101B-062310	DA-MW-103B-070110	DA-MW104B-061810	DA-MW-105B-062810	DA-MW-11-062910-AVG	DA-GW-MW116B-D1-0810
	LOCATION ID					B185A3-SB1	DA-DW15	DA-DW16	DA-MW03B	DA-MW04B	DA-MW06A	DA-MW06B	DA-MW07A	DA-MW07B	DA-MW08A	DA-MW08B	DA-MW09B	DA-MW101B	DA-MW103B	DA-MW104B	DA-MW105B	DA-MW11	DA-MW116B-D1
	TOP DEPTH																						
	BOTTOM DEPTH																						
	SAMPLE DATE					07/29/10	06/25/10	06/25/10	06/28/10	06/30/10	06/23/10	06/17/10	06/22/10	06/23/10	06/29/10	06/22/10	06/29/10	06/23/10	07/01/10	06/18/10	06/28/10	06/29/10	08/06/10
	SAMPLE CODE					NORMAL	NORMAL	NORMAL	AVG	NORMAL	NORMAL	NORMAL	NORMAL	NORMAL	NORMAL	NORMAL	NORMAL	NORMAL	NORMAL	NORMAL	NORMAL	AVG	NORMAL
FRACTION (UNITS)	PARAMETER	ORNL TW	EPA MCL	RIDEM GA GW OBJ	PAL	TBD			TBD	EXPOSED			TBD	TBD			TBD	PAVED	EXPOSED	EXPOSED	EXPOSED		TBD
VOLATILES (UG/L)	1,1,1-TRICHLOROETHANE	9100	200	200		0.5 U	0.5 UR	0.5 UR	1.95	0.29 J	0.5 U	0.5 U	290	440	0.5 U	0.5 U	41	96	7.9	7.5	3.3	0.5 U	0.5 U
	1,1,2-TRICHLOROETHANE	0.24	5	5		0.5 U	0.5 UR	0.5 UR	0.5 U	0.5 U	0.5 U	0.5 U	0.5 U	0.5 U	0.5 U	0.5 U	0.5 U	0.5 U	0.5 U	0.5 U	0.5 U	0.5 U	0.5 U
	1,1-DICHLOROETHANE	2.4				0.5 U	0.5 UR	0.5 UR	2.95	24	0.5 U	0.5 U	440	1000	0.5 U	0.5 U	82 J	510	160	230 J	110	0.5 U	0.5 U
	1,1-DICHLOROETHENE	340	7	7		0.5 U	0.5 UR	0.5 UR	0.505 J	0.77 J	0.5 UJ	0.5 U	15	11 J	0.5 U	0.5 U	18	52 J	12	14	7.4	0.5 U	0.5 U
	1,2,4-TRIMETHYLBENZENE	15				0.5 U	0.5 UR	0.5 UR	0.5 U	0.5 U	0.5 U	0.5 U	3.6	0.51 J	0.5 U	0.5 U	0.5 UJ	0.5 U	0.5 U	0.5 U	0.5 U	0.5 U	0.5 U
	1,3,5-TRIMETHYLBENZENE	12				0.5 U	0.5 UR	0.5 UR	0.5 U	0.5 U	0.5 U	0.5 U	0.66 J	0.5 U	0.5 U	0.5 U	0.5 UJ	0.5 U	0.5 U	0.5 U	0.5 U	0.5 U	0.5 U
	ACETONE	22000				2.5 U	25 J	37 J	2.5 U	4.4 U	11	3.6 J	5.2	9.6	2.5 UJ	2.5 UJ	27 U	2.5 U	2.5 UJ	2.5 UJ	2.5 U	2.5 UJ	2.5 U
	BTEX					0.562 U	0.562 R	0.562 R	0.562 U	0.562 U	0.562 U	0.562 U	2.23 J	0.34 J	0.562 U	0.562 U	0.562 UJ	0.562 U	0.562 U	0.562 U	0.562 U	0.562 U	0.562 U
	CARBON TETRACHLORIDE	0.2	5	5		0.5 U	0.5 UR	0.5 UR	1.85	0.5 U	0.5 U	0.5 U	0.5 U	0.5 U	0.5 U	0.5 U	0.5 U	0.5 U	0.5 U	0.5 U	0.5 U	0.5 U	0.5 U
	CHLOROETHANE	21000				1 U	1 UR	1 UR	1 U	1 U	1 U	1 U	1 U	1000	1 U	1 U	24	94	1.9 J	1 U	1 U	1 U	1 U
	CHLOROMETHANE	1.8				1 U	1 UR	1 UR	1 U	1 U	1 U	1 U	1 U	1 U	0.37 J	1 U	1 U	1 U	1 U	1 U	1 U	1 U	1 U
	CIS-1,2-DICHLOROETHENE	370	70	70		0.5 U	7.6 J	0.32 J	1.19 J	0.41 J	0.5 U	0.5 U	0.5 U	2.2	0.5 U	0.5 U	0.5 U	0.37 J	21	8.9	3.8	0.5 U	0.5 U
	ETHYLBENZENE	1.5	700	700		0.5 U	0.5 UR	0.5 UR	0.5 U	0.5 U	0.5 U	0.5 U	0.76 J	0.5 U	0.5 U	0.5 U	0.5 U	0.5 U	0.5 U	0.5 U	0.5 U	0.5 U	0.5 U
	ISOPROPYLBENZENE	680				0.5 U	0.5 UR	0.5 UR	0.5 U	0.5 U	0.5 U	0.5 U	0.51 J	1.3	0.5 U	0.5 U	0.5 U	0.5 U	0.5 U	0.5 U	0.5 U	0.5 U	0.5 U
	N-BUTYLBENZENE					0.5 U	0.5 UR	0.5 UR	0.5 U	0.5 U	0.5 U	0.5 U	0.39 J	0.5 U	0.5 U	0.5 U	0.5 U	0.5 U	0.5 U	0.5 U	0.5 U	0.5 U	0.5 U
	N-PROPYLBENZENE					0.5 U	0.5 UR	0.5 UR	0.5 U	0.5 U	0.5 U	0.5 U	0.9 J	0.5 U	0.5 U	0.5 U	0.5 U	0.5 U	0.5 U	0.5 U	0.5 U	0.5 U	0.5 U
	O-XYLENE	1400	10000	10000		0.5 U	0.5 UR	0.5 UR	0.5 U	0.5 U	0.5 U	0.5 U	0.79 J	0.34 J	0.5 U	0.5 U	0.5 UJ	0.5 U	0.5 U	0.5 U	0.5 U	0.5 U	0.5 U
	SEC-BUTYLBENZENE					0.5 U	0.5 UR	0.5 UR	0.5 U	0.5 U	0.5 U	0.5 U	0.48 J	0.89 J	0.5 U	0.5 U	0.5 U	0.5 U	0.5 U	0.5 U	0.5 U	0.5 U	0.5 U
	TERT-BUTYLBENZENE					0.5 U	0.5 UR	0.5 UR	0.5 U	0.5 U	0.5 U	0.5 U	0.5 U	0.34 J	0.5 U	0.5 U	0.5 U	0.5 U	0.5 U	0.5 U	0.5 U	0.5 U	0.5 U
	TETRACHLOROETHENE	0.11	5	5		0.5 U	0.5 UR	0.5 UR	0.66 J	0.5 U	0.5 U	0.5 U	0.53 J	8.3	0.5 U	0.5 U	0.5 U	0.5 U	0.5 U	2.7	2.6	0.5 U	0.5 U
	TOLUENE	2300	1000	1000		0.5 U	0.5 UR	0.5 UR	0.5 U	0.5 U	0.5 U	0.5 U	0.68 J	0.5 U	0.5 U	0.5 U	0.5 U	0.5 U	0.5 U	0.5 U	0.5 U	0.5 U	0.5 U
	TOTAL 1,2-DICHLOROETHENE	330				0.5 U	7.6 J	0.32 J	1.19 J	0.41 J	0.5 U	0.5 U	0.5 U	2.2	0.5 U	0.5 U	0.5 U	0.37 J	21	8.9	3.8	0.5 U	0.5 U
	TOTAL CHLORINATED ETHENES					0.6 U	17.4 J	11.3 J	152 J	1.18 J	0.6 UJ	0.6 U	17.2 J	25.4 J	0.6 U	0.6 U	19.6 J	57.5 J	51.7	33.3 J	16.8 J	0.6 U	0.6 U
	TOTAL CHLORINATED VOCS					0.602 U	17.4 J	11.3 J	158 J	25.5 J	0.602 UJ	0.602 U	747 J	2470 J	0.37 J	0.602 UJ	167 J	757 J	222 J	271 J	130 J	0.602 U	0.602 U
	TOTAL XYLENES	200	10000	10000		0.75 U	0.75 R	0.75 R	0.75 U	0.75 U	0.75 U	0.75 U	0.79 J	0.34 J	0.75 U	0.75 U	0.75 UJ	0.75 U	0.75 U	0.75 U	0.75 U	0.75 U	0.75 U
	TRANS-1,2-DICHLOROETHENE	110	100	100		0.5 U	0.5 UR	0.5 UR	0.5 U	0.5 U	0.5 U	0.5 U	0.5 U	0.5 U	0.5 U	0.5 U	0.5 U	0.5 U	0.5 U	0.5 U	0.5 U	0.5 U	0.5 U
	TRICHLOROETHENE	1.7	5	5		0.5 U	9.8 J	11 J	150 J	0.5 U	0.5 U	0.5 U	1 J	3.9	0.5 U	0.5 U	1.2	3.5	15	6.3	2.4	0.5 U	0.5 U
	VINYL CHLORIDE	0.016	2	2		1 U	1 UR	1 UR	1 U	1 U	1 U	1 U	0.7 J	1 U	1 U	1 U	0.37 J	1.6 J	3.7	1.4 J	0.64 J	1 U	1 U
VOLATILE GASES (UG/L)	ETHANE					0.88 J	NA	NA	2 U	NA	NA	NA	2 U	2 U	NA	NA	3.5 J	2 U	2 U	NA	2 U	2 U	NA
	ETHENE					0.76 J	NA	NA	2 U	NA	NA	NA	2 U	2 U	NA	NA	2 U	2 U	2 U	NA	2 U	2 U	NA
	METHANE					3.2 J	NA	NA	1.6 J	NA	NA	NA	160 J	14 J	NA	NA	6000 J	400 J	73 J	NA	110 J	83.5 J	NA
SEMIVOLATILES (UG/L)	1,4-DIOXANE				0.354	0.54 U	1 UR	1 UR	0.104 U	0.19 U	NA	NA	0.47 U	0.054 J	NA	NA	8.3	4	3.2	2.4	1 J	0.475 U	NA
ENERGETICS (UG/L)	1,2-PROPYLENE GLYCOL DINITRATE (PGDN)				0.57	0.11 J	NA	NA	0.1 U	NA	NA	NA	0.1 U	0.1 U	NA	NA	0.1 U	0.1 U	0.1 U	0.1 U	0.1 U	0.1 U	NA
MISCELLANEOUS PARAMETERS (MG/L)	AMMONIA-N					0.29	NA	NA	0.05 U	NA	NA	NA	2.4	0.05 U	NA	NA	4.9	0.05 U	0.05 U	NA	0.05 U	0.039 J	NA
	NITRATE-N	58	10			2.6	NA	NA	0.695	NA	NA	NA	0.025 U	0.02 J	NA	NA	0.018 J	0.025 U	0.07	NA	0.099	0.0192 J	NA
	NITRITE-N	3.7	1			0.14	NA	NA	0.025 U	NA	NA	NA	0.025 U	0.025 U	NA	NA	0.025 U	0.025 U	0.025 U	NA	0.025 U	0.025 U	NA
	ORTHOPHOSPHATE-P					0.068 J	NA	NA	0.05 U	NA	NA	NA	0.05 U	0.05 U	NA	NA	0.05 U	0.05 U	0.05 U	NA	0.05 U	0.05 U	NA
	SULFATE		250			16	NA	NA	21	NA	NA	NA	9	5.4	NA	NA	1.1	14	8.1	NA	28	20	NA
	SULFIDE					0.8 U	NA	NA	1.45	NA	NA	NA	1	0.8 U	NA	NA	0.8 U	2.2	0.8 U	NA	0.7 J	0.8 U	NA
	TOTAL ORGANIC CARBON					1.5	NA	NA	1.7	NA	NA	NA	10	1.8	NA	NA	2.8	1.1	1.1	NA	0.76 J	1.1	NA
MISCELLANEOUS PARAMETERS (UG/L)	CYANIDE		200		5.2	5 U	NA	NA	NA	NA	NA	NA	5 U	5 U	NA	NA	5.6 J	5 U	5 U	NA	NA	5 U	NA
FIELD ANALYSIS (MG/L)	FERROUS IRON (Fe2+)					U	NA	NA	0.41 (0.74)	NA	NA	NA	13	1.01	NA	NA	1.13	U	2.92	NA	0.11	0.53	NA

LIGHT SHADING - DETECTED; DARK SHADING - EXCEEDS CRITERION; U - NOT DETECTED;
UJ - DETECTION LIMIT APPROXIMATE; J - QUANTITATION APPROXIMATE; R - REJECTED; NA - NOT ANALYZED

TABLE 3-2
GROUNDWATER ANALYTICAL RESULTS
SITE 08, NUSC DISPOSAL AREA
SUPPLEMENTAL REMEDIAL INVESTIGATION REPORT
NAVAL STATION NEWPORT, RHODE ISLAND
PAGE 2 OF 2

	SAMPLE ID	Benchmarks				DA-GW-MW116B-D2-0810	DA-MW-117B-D1-081110	DA-MW-117B-D2-081110	DA-MW-118B-D1-081010	DA-MW-118B-D2-081010	DA-MW-12-063010	DA-MW-122-063010	DA-MW-124B-081110	DA-MW-127B-081010	DA-GW-MW128B-	DA-MW-129B-081010-AVG	DA-GW-MW130B-	DA-MW-13B-063010
	LOCATION ID					DA-MW116B-D2	DA-MW117B-D1	DA-MW117B-D2	DA-MW118B-D1	DA-MW118B-D2	DA-MW12	DA-MW122	DA-MW124B	DA-MW127B	DA-MW128B	DA-MW129B	DA-MW130B	DA-MW13B
	TOP DEPTH																	
	BOTTOM DEPTH																	
	SAMPLE DATE					08/06/10	08/11/10	08/11/10	08/10/10	08/10/10	06/30/10	06/30/10	08/11/10	08/10/10	08/09/10	08/10/10	08/09/10	06/30/10
	SAMPLE CODE					NORMAL	NORMAL	NORMAL	NORMAL	NORMAL	NORMAL	NORMAL	NORMAL	NORMAL	NORMAL	AVG	NORMAL	NORMAL
FRACTION (UNITS)	PARAMETER	ORNL TW	EPA MCL	RIDEM GA GW OBJ	PAL	TBD	TBD	TBD	TBD	TBD	TBD	TBD	EXPOSED	TBD	TBD	TBD	TBD	TBD
VOLATILES (UG/L)	1,1,1-TRICHLOROETHANE	9100	200	200		0.5 U	0.5 U	0.5 U	0.5 U	0.5 U	0.5 U	0.5 U	NA	0.5 U	1 J	140	10	0.5 U
	1,1,2-TRICHLOROETHANE	0.24	5	5		0.5 U	0.5 U	0.5 U	0.5 U	0.5 U	0.5 U	0.5 U	NA	0.5 U	0.48 J	0.5 U	0.5 U	0.5 U
	1,1-DICHLOROETHANE	2.4				0.5 U	0.28 J	0.7 J	0.5 U	0.5 U	0.5 U	0.84 J	NA	0.5 U	1.6	64.5	9.2	0.5 U
	1,1-DICHLOROETHENE	340	7	7		0.5 U	0.45 J	0.5 U	1.4	0.59 J	0.5 U	0.5 U	NA	0.5 U	13	6.15	1.3	0.5 U
	1,2,4-TRIMETHYLBENZENE	15				0.5 U	0.5 U	0.5 U	0.5 U	0.5 U	0.5 U	0.5 U	NA	0.5 U	0.5 U	0.5 U	0.5 U	0.5 U
	1,3,5-TRIMETHYLBENZENE	12				0.5 U	0.5 U	0.5 U	0.5 U	0.5 U	0.5 U	0.5 U	NA	0.5 U	0.5 U	0.5 U	0.5 U	0.5 U
	ACETONE	22000				2.5 U	2.5 U	2.5 U	2.5 U	2.5 U	2.5 UJ	2.5 UJ	NA	2.5 UJ	2.5 U	2.5 U	2.5 U	2.5 UJ
	BTEX					0.562 U	0.562 U	0.562 U	0.562 U	0.562 U	0.562 U	0.562 U	NA	0.562 U	0.562 U	0.562 U	0.562 U	0.562 U
	CARBON TETRACHLORIDE	0.2	5	5		0.5 U	0.5 U	0.5 U	0.5 U	0.5 U	0.5 U	0.5 U	NA	0.5 U	0.5 U	0.5 U	0.5 U	0.5 U
	CHLOROETHANE	21000				1 U	1 U	1 U	1 U	1 U	1 U	1 U	NA	1 U	1 U	75.5	1 U	1 U
	CHLOROMETHANE	1.8				1 U	1 U	1 U	1 U	1 U	1 U	1 U	NA	1 U	1 U	1 U	1 U	1 U
	CIS-1,2-DICHLOROETHENE	370	70	70		0.5 U	1.4	0.79 J	3.2	1.8	0.23 J	0.53 J	NA	0.53 J	26	0.76 J	0.5 U	0.51 J
	ETHYLBENZENE	1.5	700	700		0.5 U	0.5 U	0.5 U	0.5 U	0.5 U	0.5 U	0.5 U	NA	0.5 U	0.5 U	0.5 U	0.5 U	0.5 U
	ISOPROPYLBENZENE	680				0.5 U	0.5 U	0.5 U	0.5 U	0.5 U	0.5 U	0.5 U	NA	0.5 U	0.5 U	0.5 U	0.5 U	0.5 U
	N-BUTYLBENZENE					0.5 U	0.5 U	0.5 U	0.5 U	0.5 U	0.5 U	0.5 U	NA	0.5 U	0.5 U	0.5 U	0.5 U	0.5 U
	N-PROPYLBENZENE					0.5 U	0.5 U	0.5 U	0.5 U	0.5 U	0.5 U	0.5 U	NA	0.5 U	0.5 U	0.5 U	0.5 U	0.5 U
	O-XYLENE	1400	10000	10000		0.5 U	0.5 U	0.5 U	0.5 U	0.5 U	0.5 U	0.5 U	NA	0.5 U	0.5 U	0.5 U	0.5 U	0.5 U
	SEC-BUTYLBENZENE					0.5 U	0.5 U	0.5 U	0.5 U	0.5 U	0.5 U	0.5 U	NA	0.5 U	0.5 U	0.5 U	0.5 U	0.5 U
	TERT-BUTYLBENZENE					0.5 U	0.5 U	0.5 U	0.5 U	0.5 U	0.5 U	0.5 U	NA	0.5 U	0.5 U	0.5 U	0.5 U	0.5 U
	TETRACHLOROETHENE	0.11	5	5		0.5 U	0.5 U	0.5 U	0.5 U	0.5 U	4.5	0.58 J	NA	0.5 U	0.5 U	0.5 U	0.5 U	1.1
	TOLUENE	2300	1000	1000		0.5 U	0.5 U	0.5 U	0.5 U	0.5 U	0.5 U	0.5 U	NA	0.5 U	0.5 U	0.5 U	0.5 U	0.5 U
	TOTAL 1,2-DICHLOROETHENE	330				0.5 U	1.4	0.79 J	3.56 J	1.8	0.23 J	0.53 J	NA	0.53 J	29.7	0.76 J	0.5 U	0.51 J
	TOTAL CHLORINATED ETHENES					0.6 U	142 J	131 J	205 J	162 J	5.83 J	1.68 J	NA	6.02 J	1240 J	11.4 J	2.01 J	1.98 J
	TOTAL CHLORINATED VOCS					0.602 U	142 J	131 J	205 J	162 J	5.83 J	2.52 J	NA	6.02 J	1250 J	291 J	21.2 J	1.98 J
	TOTAL XYLENES	200	10000	10000		0.75 U	0.75 U	0.75 U	0.75 U	0.75 U	0.75 U	0.75 U	NA	0.75 U	0.75 U	0.75 U	0.75 U	0.75 U
	TRANS-1,2-DICHLOROETHENE	110	100	100		0.5 U	0.5 U	0.5 U	0.36 J	0.5 U	0.5 U	0.5 U	NA	0.5 U	3.7	0.5 U	0.5 U	0.5 U
	TRICHLOROETHENE	1.7	5	5		0.5 U	140	130	200	160	1.1	0.57 J	NA	4.8	1200	4.5	0.71 J	0.37 J
	VINYL CHLORIDE	0.016	2	2		1 U	1 U	1 U	1 U	1 U	1 U	1 U	NA	0.69 J	0.31 J	1 U	1 U	1 U
VOLATILE GASES (UG/L)	ETHANE					NA	2 U	2 U	NA	NA	2 U	NA	NA	2 UJ	2 U	2 U	NA	NA
	ETHENE					NA	2 U	2 U	NA	NA	2 U	NA	NA	2 UJ	2 U	2 U	NA	NA
	METHANE					NA	1.4 J	1.5 J	NA	NA	5.9 J	NA	NA	16 J	1.7 J	79.5	NA	NA
SEMIVOLATILES (UG/L)	1,4-DIOXANE				0.354	NA	0.5 U	0.55 U	NA	NA	0.48 U	0.48 U	NA	0.22 J	0.42 J	0.665 J	NA	0.48 U
ENERGETICS (UG/L)	1,2-PROPYLENE GLYCOL DINITRATE (PGDN)				0.57	NA	NA	NA	NA	NA	0.1 U	0.1 U	0.1 U	NA	NA	NA	0.1 U	0.1 U
MISCELLANEOUS PARAMETERS (MG/L)	AMMONIA-N					NA	0.05 U	0.05 U	NA	NA	0.05 U	NA	NA	0.05 U	0.05 U	0.17	NA	NA
	NITRATE-N	58	10			NA	0.21	0.025 U	NA	NA	3.4	NA	NA	0.02 J	0.02 J	0.325	NA	NA
	NITRITE-N	3.7	1			NA	0.025 U	0.025 U	NA	NA	0.025 U	NA	NA	0.025 U	0.025 U	0.025 U	NA	NA
	ORTHOPHOSPHATE-P					NA	0.05 U	0.05 U	NA	NA	0.05 U	NA	NA	0.05 U	0.05 U	0.05 U	NA	NA
	SULFATE		250			NA	18	29	NA	NA	23	NA	NA	39	25	11	NA	NA
	SULFIDE					NA	0.8 U	0.8 U	NA	NA	0.73 J	NA	NA	0.8 U	0.8 U	0.8 U	NA	NA
	TOTAL ORGANIC CARBON					NA	0.59 J	0.57 J	NA	NA	1	NA	NA	0.66 J	0.6 J	1.9	NA	NA
MISCELLANEOUS PARAMETERS (UG/L)	CYANIDE		200		5.2	NA	NA	NA	NA	NA	5 U	NA	NA	NA	NA	NA	NA	5 U
FIELD ANALYSIS (MG/L)	FERROUS IRON (Fe2+)					NA	NA	NA	NA	NA	U	NA	NA	NA	NA	NA	NA	NA

LIGHT SHADING - DETECTED; DARK SHADING - EXCEEDS CRITERION; U - NOT DETECTED;
UJ - DETECTION LIMIT APPROXIMATE; J - QUANTITATION APPROXIMATE; R - REJECTED; NA - NOT ANALYZED

TABLE 3-3
SURFACE SOIL ANALYTICAL RESULTS
SITE 08, NUSC DISPOSAL AREA
SUPPLEMENTAL REMEDIAL INVESTIGATION REPORT
NAVAL STATION NEWPORT, RHODE ISLAND

	SAMPLE ID	Benchmarks			B179-SB1-0001-AVG	B179-SB2-0001	B179-SB2-0001-NOV2010	B179-SB3-0001-AVG	B179-SB3-0001-NOV2010	127B-S-1-070910-0-2
	LOCATION ID				B179-SB1	B179-SB2	B179-SB2	B179-SB3	B179-SB3	DA-SB127B
	TOP DEPTH				0	0	0	0	0	0
	BOTTOM DEPTH				1	1	1	1	1	2
	SAMPLE DATE				07/27/10	07/27/10	11/22/10	07/27/10	11/22/10	07/09/10
	SAMPLE CODE				AVG	NORMAL	NORMAL	AVG	NORMAL	NORMAL
FRACTION (UNITS)	PARAMETER	ORNL SLDCR	RIDEM DCR	PAL						
VOLATILES (UG/KG)	1,1,1-TRICHLOROETHANE				1.8 J	2.4 U	2.4 U	2.9 U	2.5 U	2.8 U
	2-BUTANONE	28000000	10000000		17.5 J	5.8 J	12 U	11.2 J	12 U	8 J
	2-HEXANONE				12 U	12 U	12 U	14.5 UJ	12 U	15 J
	ACETONE	61000000	7800000		250 J	74 UJ	38 U	180 J	52 U	98 J
	CHLOROFORM	300	1200		0.96 J	2.4 U	2.4 U	2.9 U	2.5 U	2.8 U
	TOTAL CHLORINATED ETHENES				1.14 J	2.9 U	2.4 U	3.47 U	2.5 U	3.34 U
	TOTAL CHLORINATED VOCs				2.22 J	2.86 UJ	2.4 U	3.43 UJ	2.5 U	3.3 UJ
	TRICHLOROETHENE	2800	13000		1.02 J	2.4 U	2.4 U	2.9 U	2.5 U	2.8 U
SEMIVOLATILES (UG/KG)	1,1-BIPHENYL	3900000			140 J	280 U	290 U	245 U	280 U	NA
	2-METHYLNAPHTHALENE	310000	123000		350 J	12 U	NA	5.45 J	NA	NA
	ACENAPHTHENE	3400000	43000		900 J	12 U	19 J	15 J	6.5 J	NA
	ACENAPHTHYLENE	3400000	23000		11 U	12 U	12 UJ	9.9 U	8.8 J	NA
	ANTHRACENE	17000000	35000		1550	3.2 J	64	29.5	4.3 J	NA
	BENZO(A)ANTHRACENE	150	900		3600 J	19 J	170	150 J	27	NA
	BENZO(A)PYRENE	15	400		2550 J	19 J	100	130 J	24	NA
	BENZO(B)FLUORANTHENE	150	900		3750 J	28	160	200 J	31	NA
	BENZO(G,H,I)PERYLENE	1700000	800		1350 J	13 J	51	74 J	15 J	NA
	BENZO(K)FLUORANTHENE	1500	900		1230	9.7 J	46	71 J	10 J	NA
	BIS(2-ETHYLHEXYL)PHTHALATE	35000	46000		150 J	280 U	290 U	130 J	280 U	NA
	CARBAZOLE				1150	280 U	290 U	245 U	280 U	NA
	CHRYSENE	15000	400		3350 J	20 J	130	145 J	20 J	NA
	DIBENZO(A,H)ANTHRACENE	15	400		445 J	12 U	12 J	23 J	11 U	NA
	DIBENZOFURAN				800	280 U	290 U	245 U	280 U	NA
	DI-N-BUTYL PHTHALATE				300 J	280 U	290 U	245 U	280 U	NA
	FLUORANTHENE	2300000	20000		6850 J	30 J	490	225	43	NA
	FLUORENE	2300000	28000		1150 J	12 UJ	25 J	19 J	10 J	NA
	HIGH MOLECULAR WEIGHT PAHS				31000 J	186 J	1610 J	1420 J	240 J	NA
	INDENO(1,2,3-CD)PYRENE	150	900		1800	16 J	47	100 J	14 J	NA
	LOW MOLECULAR WEIGHT PAHS				14200 J	26.2 J	388 J	281 J	65.6 J	NA
	NAPHTHALENE	3900	54000		1400	12 U	12 U	11.8 J	11 U	NA
	PHENANTHRENE	1700000	40000		8850 J	23 J	280	200	36	NA
	PYRENE	1700000	13000		6150 J	31	400	300 J	56	NA
	TOTAL CARCINOGENIC PAHS-HALFND				16700 J	118 J	665 J	820 J	132 J	NA
	TOTAL CARCINOGENIC PAHS-POS				16700 J	112 J	665 J	820 J	126 J	NA
	TOTAL PAHS				45200 J	212 J	1990 J	1700 J	306 J	NA
PESTICIDES/PCBS (UG/KG)	4,4'-DDD	2000			1.7 U	1.9 U	2 U	1.7 U	3.6 J	NA
	4,4'-DDE	1400			1.12 J	1.9 U	3.2 J	0.395 J	0.89 J	NA
	4,4'-DDT	1700			5.5 UJ	1.9 U	1.6 J	0.82 J	1.2 J	NA
	DIELDRIN	30	40		1.75 U	1.9 U	2 U	0.72 J	1.8 U	NA
	ENDOSULFAN SULFATE	370000			11	1.9 U	2 U	1.35 J	1.8 U	NA
	GAMMA-BHC (LINDANE)				8.72 J	0.98 U	1 U	0.855 U	0.95 U	NA
	HEXACHLOROBENZENE				1.75 U	1.9 U	290 U	0.57 J	280 U	NA
	TOTAL DDD/DDE/DDT				1.42 J	1.9 U	4.8 J	0.79 J	5.69 J	NA
METALS (MG/KG)	ALUMINUM	77000			8210 J	4330 J	13100	3280 J	10200	NA
	ARSENIC	0.39	7		5 J	0.53 J	4.2	0.835 J	3.6	NA
	BARIUM	15000	5500		32 J	33.1 J	25.3	20.5 J	23.6	NA
	BERYLLIUM	160	0.4		0.39 J	0.26 J	0.43 J	0.205 J	0.35 J	NA
	CADMIUM	70	39		0.905 J	0.045 U	0.27 UJ	0.085 UJ	0.3 UJ	NA
	CALCIUM				1520	2380 J	766	2580 J	1170	NA
	CHROMIUM	230	390		18.7	3.3	13.3	5.5	9.9	NA
	COBALT	23			6.65	1.9 J	6.1	2 J	6.2	NA
	COPPER	3100	3100		18.8	2.6	10.1	4.35	11.1	NA
	IRON	55000			16600	7880	15100	6990	15700	NA
	LEAD	400	150		42.3	3.2	11.3	4.55	11.8	NA
	MAGNESIUM				2350 J	1860 J	2190	1380 J	2470	NA
	MANGANESE	1800	390		324	273	142	246	220	NA
	MERCURY	23	23		1.25	0.016 U	0.03 J	0.017 U	0.02 J	NA
	MOLYBDENUM	390			1.12 J	0.72 UJ	0.25 J	0.65 UJ	0.21 J	NA
	NICKEL	1600	1000		14.9	2 J	11.7	5.75 J	11.4	NA
	POTASSIUM				664 J	1510 J	418	819 J	756	NA
	SELENIUM	390	390		0.56 U	0.63U	0.38 J	0.58U	0.69 U	NA
	SILVER	390	200		0.46 J	0.34 J	5.1	0.27 J	0.4 UJ	NA
	SODIUM				254	61 J	77.3 J	47.5 J	101	NA
	THALLIUM	5.1	5.5		0.05 J	0.1 J	0.08 J	0.05 J	0.06 J	NA
	VANADIUM	390	550		14.4	9.2	21.2	5.6	14.2	NA
	ZINC	23000	6000		102	25.5	32.8	33.6	37.7	NA

DARK SHADING - EXCEEDS CRITERION; LIGHT SHADING - DETECTED; U - NOT DETECTED;
UJ - DETECTION LIMIT APPROXIMATE; J - QUANTITATION APPROXIMATE; R - REJECTED; NA - NOT ANALYZED

TABLE 3-4
SUBSURFACE SOIL ANALYTICAL RESULTS
SITE 08, NUSC DISPOSAL AREA
SUPPLEMENTAL REMEDIAL INVESTIGATION REPORT
NAVAL STATION NEWPORT, RHODE ISLAND

FRACTION (UNITS)	SAMPLE ID	Benchmarks ORNL SLDCR	Benchmarks RIDEM DCR	Benchmarks PAL	B179-SB1-0507	B179-SB2-0709	B179-SB2-0204-AVG	B179-SB3-0709	B179-SB3-0406	B185A1-SB1-0103	B185A1-SB1-0708	B185A1-SB2-0103	B185A1-SB2-0305	B185A1-SB3-0103	B185A1-SB3-0305	B185A1-SB4-0103	B185A1-SB4-0507	B185A3-SB1-0103
	LOCATION ID				B179-SB1	B179-SB2	B179-SB2	B179-SB3	B179-SB3	B185A1-SB1	B185A1-SB1	B185A1-SB2	B185A1-SB2	B185A1-SB3	B185A1-SB3	B185A1-SB4	B185A1-SB4	B185A3-SB1
	TOP DEPTH				5	7	2	7	4	1	7	1	3	1	3	1	5	1
	BOTTOM DEPTH				7	9	4	9	6	3	8	3	5	3	5	3	7	3
	SAMPLE DATE				07/27/10	07/27/10	11/22/10	07/27/10	11/22/10	07/28/10	07/28/10	07/28/10	07/28/10	07/28/10	07/28/10	07/28/10	07/28/10	07/28/10
	SAMPLE CODE				NORMAL	NORMAL	AVG	NORMAL	NORMAL	NORMAL	NORMAL	NORMAL	NORMAL	NORMAL	NORMAL	NORMAL	NORMAL	NORMAL
VOLATILES (UG/KG)	1,1,1-TRICHLOROETHANE				2.8 U	0.45 J	1.37 J	1.5 J	0.49 J	2.1 U	2.1 U	2.4 U	2.5 U	2.5 U	2.4 U	2.4 U	2.4 U	3 U
	1,1-DICHLOROETHANE				2.8 U	2.2 U	2.5 U	3.4 J	2.2 U	2.1 U	2.1 U	2.4 U	2.5 U	2.5 U	2.4 U	2.4 U	2.4 U	3 U
	1,2,4-TRIMETHYLBENZENE	67000			4.2 J	2.2 U	2.65 UJ	2.2 U	2.2 U	2.1 U	1.1 J	2.4 U	2.5 U	2.5 U	2.4 U	2.4 U	2.4 U	3 U
	2-BUTANONE	28000000	10000000		14 U	11 U	30.5 J	11 U	11 U	10 U	10 U	12 U	12 U	12 U	8.5 J	15 J	12 U	15 U
	ACETONE	61000000	7800000		51 UJ	44 UJ	135 J	12 UJ	18 UJ	40 U	23 U	43 U	43 U	60 U	65 U	200	15 U	73 U
	BTEX				0.76 J	2.46 U	2.98 U	2.48 U	2.48 U	2.36 U	2.36 U	2.71 U	2.81 U	2.81 U	2.69 U	2.7 U	2.69 U	3.38 U
	CARBON DISULFIDE	670000			5.6 J	2.2 U	2.65 UJ	2.2 U	2.2 UJ	2.1 U	2.1 U	2.4 U	4.9 J	2.5 U	3.3 J	2.4 U	2.4 U	3 U
	CIS-1,2-DICHLOROETHENE	780000	630000		2.8 U	2.2 U	2.65 U	2.2 U	2.2 U	2.1 U	2.1 U	6.4	2.5 U	2.5 U	2.4 U	2.4 U	2.4 U	3 U
	ETHYLBENZENE	5700	71000		0.76 J	2.2 U	2.65 U	2.2 U	2.2 U	2.1 U	2.1 U	2.4 U	2.5 U	2.5 U	2.4 U	2.4 U	2.4 U	3 U
	ISOPROPYLBENZENE	2200000			4.5 J	2.2 U	2.65 UJ	2.2 U	2.2 U	2.1 U	1.6 J	2.4 U	2.5 U	2.5 U	2.4 U	2.4 U	2.4 U	3 U
	N-BUTYLBENZENE				1.4 J	2.2 U	2.65 UJ	2.2 U	2.2 U	2.1 U	3.3 J	2.4 U	2.5 U	2.5 U	2.4 U	2.4 U	2.4 U	3 U
	N-PROPYLBENZENE				2.2 J	2.2 U	2.65 UJ	2.2 U	2.2 U	2.1 U	2.2 J	2.4 U	2.5 U	2.5 U	2.4 U	2.4 U	2.4 U	3 U
	SEC-BUTYLBENZENE				13 J	1 J	2.65 UJ	2.2 U	2.2 U	2.1 U	6.7	2.4 U	2.5 U	2.5 U	2.4 U	2.4 U	2.4 U	3 U
	TERT-BUTYLBENZENE				2.2 J	2.2 U	2.65 UJ	2.2 U	2.2 U	2.1 U	2.1 U	2.4 U	2.5 U	2.5 U	2.4 U	2.4 U	2.4 U	3 U
	TETRACHLOROETHENE	570	12000		2.8 U	2.2 U	2.65 U	2.2 U	2.2 U	2.1 U	2.1 U	2.4 U	2.5 U	2.5 U	2.4 U	2.4 U	7.4	3 U
	TOTAL 1,2-DICHLOROETHENE	700000			2.8 U	2.2 U	2.65 U	2.2 U	2.2 U	2.1 U	2.1 U	15.7	2.5 U	2.5 U	2.4 U	2.4 U	2.4 U	3 U
	TOTAL CHLORINATED ETHENES				3.34 U	2.62 U	3.17 U	2.64 U	2.64 U	2.52 U	2.52 U	25.8 J	3 U	0.75 J	2.86 U	1.1 J	8.8 J	3.6 U
	TOTAL CHLORINATED VOCS				3.3 UJ	0.45 J	1.37 J	4.9 J	0.49 J	2.49 U	2.49 U	25.8 J	2.96 U	0.75 J	2.83 U	1.1 J	8.8 J	3.56 U
	TRANS-1,2-DICHLOROETHENE				2.8 U	2.2 U	2.65 U	2.2 U	2.2 U	2.1 U	2.1 U	9.3	2.5 U	2.5 U	2.4 U	2.4 U	2.4 U	3 U
	TRICHLOROETHENE	2800	13000		2.8 U	2.2 U	2.65 U	2.2 U	2.2 U	2.1 U	2.1 U	7.3	2.5 U	0.75 J	2.4 U	1.1 J	1.4 J	3 U
	VINYL CHLORIDE	60	20		5.5 U	4.3 U	5.25 U	4.4 U	4.4 U	4.2 U	4.2 U	2.8 J	5 U	5 U	4.7 U	4.8 U	4.7 U	6 U
SEMIVOLATILES (UG/KG)	2-METHYLNAPHTHALENE	310000	123000		12 U	11 U	11.5 U	11 U	11 U	4 J	2.5 J	6.3 J	12 U	11 U	12 U	5.2 J	13 U	11 U
	2-NITROANILINE				730 U	660 U	725 U	670 U	700 U	680 U	640 U	120 J	710 U	700 U	720 U	730 U	790 U	700 U
	ACENAPHTHENE	3400000	43000		2.3 J	11 U	6.2 J	11 U	6.2 J	3.9 J	2.2 J	3 J	12 U	6.3 J	12 J	30 J	5.4 J	11 U
	ACENAPHTHYLENE	3400000	23000		12 U	11 U	7.6 J	11 U	11 UJ	11 U	10 U	11 U	12 U	11 U	12 U	2.8 J	1.8 J	2 J
	ANTHRACENE	17000000	35000		4.9 J	2.7 J	2.3 J	11 U	2.7 J	6 J	2.4 J	9.8 J	12 U	12 J	12 J	39 J	11 J	11 U
	BENZO(A)ANTHRACENE	150	900		16 J	15 J	14.5 J	11 J	16 J	25 J	6.7 J	70 J	5.2 J	55 J	44	160 J	45 J	11 U
	BENZO(A)PYRENE	15	400		16 J	16 J	11.2 J	9 J	13 J	26 J	4.9 J	65 J	5.6 J	54 J	45	140 J	50 J	11 U
	BENZO(B)FLUORANTHENE	150	900		25	26	15.5 J	22 J	17 J	37 J	9.5 U	84 J	9 U	77 J	63	220 J	71 J	11 U
	BENZO(G,H,I)PERYLENE	1700000	800		9.2 J	10 J	4.75 J	7.9 J	5.8 J	18 J	3.2 J	40 J	3.4 J	41 J	30	92 J	39 J	11 U
	BENZO(K)FLUORANTHENE	1500	900		8.2 J	8.3 J	5.4 J	8.9 J	5 J	15 J	3.4 J	31 J	4 J	32 J	22 J	65 J	20 J	11 U
	BIS(2-ETHYLHEXYL)PHTHALATE				290U	230 J	520 U	270 U	280 U	280 U	260 U	280 U	290 U	280 U	290 U	290 U	320 U	280 U
	CHRYSENE	15000	400		17 J	18 J	6.65 J	15 J	8.1 J	29 J	6.6 J	65 J	6.7 J	67 J	58	180 J	51 J	11 U
	DIBENZO(A,H)ANTHRACENE	15	400		5.5 J	2.5 J	11.5 U	2.3 J	11 U	11 U	10 U	14 J	12 U	11 J	8.3 J	23 J	14 J	11 U
	FLUORANTHENE	2300000	20000		46	25	16 J	15 J	19 J	49 J	19 J	130 J	16 J	130 J	120	400	120 J	3.7 J
	FLUORENE	2300000	28000		12 UJ	11 UJ	7.75 J	11 UJ	9.8 J	5.5 J	4.7 J	11 U	12 U	10 J	18 J	44 J	5.2 J	11 U

DARK SHADING - EXCEEDS CRITERION; LIGHT SHADING - DETECTED; U - NOT DETECTED;
UJ - DETECTION LIMIT APPROXIMATE; J - QUANTITATION APPROXIMATE; R - REJECTED; NA - NOT ANALYZED

TABLE 3-4
SUBSURFACE SOIL ANALYTICAL RESULTS
SITE 08, NUSC DISPOSAL AREA
SUPPLEMENTAL REMEDIAL INVESTIGATION REPORT
NAVAL STATION NEWPORT, RHODE ISLAND

	SAMPLE ID	Benchmarks			B179-SB1-0507	B179-SB2-0709	B179-SB2-0204-AVG	B179-SB3-0709	B179-SB3-0406	B185A1-SB1-0103	B185A1-SB1-0708	B185A1-SB2-0103	B185A1-SB2-0305	B185A1-SB3-0103	B185A1-SB3-0305	B185A1-SB4-0103	B185A1-SB4-0507	B185A3-SB1-0103
	LOCATION ID				B179-SB1	B179-SB2	B179-SB2	B179-SB3	B179-SB3	B185A1-SB1	B185A1-SB1	B185A1-SB2	B185A1-SB2	B185A1-SB3	B185A1-SB3	B185A1-SB4	B185A1-SB4	B185A3-SB1
	TOP DEPTH				5	7	2	7	4	1	7	1	3	1	3	1	5	1
	BOTTOM DEPTH				7	9	4	9	6	3	8	3	5	3	5	3	7	3
	SAMPLE DATE				07/27/10	07/27/10	11/22/10	07/27/10	11/22/10	07/28/10	07/28/10	07/28/10	07/28/10	07/28/10	07/28/10	07/28/10	07/28/10	07/28/10
	SAMPLE CODE				NORMAL	NORMAL	AVG	NORMAL	NORMAL	NORMAL	NORMAL	NORMAL	NORMAL	NORMAL	NORMAL	NORMAL	NORMAL	NORMAL
FRACTION (UNITS)	PARAMETER	ORNL SLDCR	RIDEM DCR	PAL														
	HIGH MOLECULAR WEIGHT PAHS				191 J	166 J	87.8 J	121 J	108 J	274 J	64.7 J	654 J	55.6 J	660 J	524 J	1790 J	562 J	8.8 J
	INDENO(1,2,3-CD)PYRENE	150	900		16 J	12 J	4.65 J	12 J	5.7 J	21 J	7.9 J	55 J	4.7 J	53 J	38	130 J	52 J	11 U
	LOW MOLECULAR WEIGHT PAHS				31.2 J	22.7 J	26.6 J	2.7 J	31.7 J	54.4 J	26.8 J	64.5 J	12 U	148 J	172 J	635 J	95.4 J	4.8 J
	NAPHTHALENE	3900	54000		12 U	11 U	11.5 U	11 U	11 U	11 U	10 U	6.4 J	12 U	11 U	12 U	4.3 J	13 U	11 U
	PHENANTHRENE	1700000	40000		24 J	20 J	8.3 J	2.7 J	13 J	35 J	15 J	39 J	12 U	120 J	130	510	72 J	2.8 J
	PYRENE	1700000	13000		32	33	12.4 J	18 J	18 J	54 J	13 J	100 J	10 J	140 J	96	380	100 J	5.1 J
	TOTAL CARCINOGENIC PAHS-HALFND				104 J	97.8 J	63.6 J	80.2 J	70.3 J	158 J	39.2 J	384 J	36.7 J	349 J	278 J	918 J	303 J	11 U
	TOTAL CARCINOGENIC PAHS-POS				104 J	97.8 J	54.8 J	80.2 J	64.8 J	153 J	29.5 J	384 J	26.2 J	349 J	278 J	918 J	303 J	11 U
	TOTAL PAHS				222 J	188 J	114 J	124 J	139 J	328 J	91.5 J	718 J	55.6 J	808 J	696 J	2430 J	657 J	13.6 J
PESTICIDES/PCBS (UG/KG)	4,4'-DDD	2000			3.2 J	1.8 U	2 U	1.7 U	1.8 U	1.8 U	1.7 U	0.81 J	1.9 U	1 J	2 U	1.9 U	2 U	1.8 U
	4,4'-DDE	1400			1.5 J	1.8 U	0.37 J	1.7 U	0.37 J	1.8 U	1.7 U	1.9 UJ	1.9 U	1.9 U	2 U	0.43 J	2 U	1.8 U
	4,4'-DDT	1700			1.9 UJ	1.8 U	2 U	1.7 U	1.8 U	1.8 U	1.7 U	1.9 UJ	1.9 U	0.9 J	0.68 J	1.9 U	2 U	1.8 U
	DELTA-BHC				1 U	0.91 U	1.04 U	0.9 U	0.94 U	0.95 U	0.9 U	0.98 UJ	1 U	0.72 J	1 U	0.84 J	1 U	0.95 U
	DIELDRIN	30	40		0.52 J	1.8 U	2 U	1.7 U	1.8 U	1.8 U	1.7 U	1.9 UJ	1.9 U	1.9 U	2 U	1.9 U	2 U	1.8 U
	ENDOSULFAN I				1 U	0.91 U	1.04 U	0.9 U	0.94 U	0.95 U	0.9 U	0.98 UJ	1 U	0.99 U	1 U	1 U	1 J	0.95 U
	ENDOSULFAN II	370000			0.84 J	1.8 U	2 U	1.7 U	1.8 U	1.8 U	1.7 U	1.9 UJ	1.9 U	1.9 U	2 U	1.9 U	2 U	1.8 U
	ENDRIN KETONE				1.9 U	0.56 J	2 U	1.7 U	1.8 U	1.8 UJ	1.7 UJ	1.9 UJ	1.9 UJ	1.9 UJ	1.8 J	1.9 UJ	2 UJ	1.8 UJ
	GAMMA-CHLORDANE	1600	500		1 U	0.91 U	1.04 U	0.9 U	0.94 U	0.95 U	0.35 J	0.98 UJ	1 U	0.99 U	1 U	1 U	1 U	0.95 U
	HEPTACHLOR	110			1 U	0.91 U	1.04 U	0.9 U	0.94 U	0.95 U	0.49 J	0.98 UJ	1 U	0.99 U	1 U	1 U	1 U	0.95 U
	HEXACHLOROBENZENE				1.9 U	1.8 U	NA	1.7 U	NA	1.8 U	1.7 U	1.9 UJ	1.9 U	1.9 U	2 U	1.9 U	1.5 J	1.8 U
	TOTAL CHLORDANE				1 U	0.91 U	1.04 U	0.9 U	0.94 U	0.95 U	0.35 J	0.98 UJ	1 U	0.99 U	1 U	1 U	1 U	0.95 U
	TOTAL DDD/DDE/DDT				4.7 J	1.8 U	0.37 J	1.7 U	0.37 J	1.8 U	1.7 U	0.81 J	1.9 U	1.9 J	0.68 J	0.43 J	2 U	1.8 U
EXPLOSIVES (UG/KG)	1,2-PROPYLENE GLYCOL DINITRATE			60000	100 U	100 U	NA	100 U	NA	260	100 U	420	100 U	100 U	100 U	100 U	100 U	100 U
METALS (MG/KG)	ALUMINUM	77000			8230 J	9120 J	12400	12300 J	9980	12000	21000	11200	15200	12100	11700	13000	13200	11600
	ARSENIC	0.39	7		4.4 J	4.4 J	4.7	19.1 J	4.7	24.6	2.8	18.2	11.5	27.3	8.8	13.4	9.5	7
	BARIUM	15000	5500		23.3 J	29.8 J	24.2	24.3 J	20.2	20.5	12.5	23.3	20.8	23.3	22.2	30	43.1	30
	BERYLLIUM	160	0.4		0.38 J	0.3 J	0.415 J	0.38 J	0.34 J	0.43 J	0.31 J	0.39 J	0.35 J	0.45 J	0.35 J	0.38 J	0.6 J	0.5
	CALCIUM				1540 J	2040 J	837	1310 J	800	845	2120	630	650	728	640	738	1270	664
	CHROMIUM	230	390		10.9	16.1	14.4	18.1	7.9	14.4	23.5	13.5	18	13.6	12.7	16.5	18.4	11.6
	COBALT	23			10.6	7.9	7.8	15	4.2	12.8	23.8	11.4	12.8	12.5	6.5	10.8	15.8	6.5
	COPPER	3100	3100		9.3	12.6	11.4	26.5	8.1	17	18.3	15.4	10.1	20.1	3.4	10	14	6
	IRON	55000			13300	20000	19200	37400	13700	26500	40700	21500	31500	25400	18800	26500	27900	16700
	LEAD	400	150		7	7.5	13.3	11.4	7.9	12.9	16.7	13.4	9.5	13	8.4	12.3	12.6	9.5
	MAGNESIUM				2120 J	3330 J	2960	4290 J	1660	3040	7750	2680	4300	2840	2260	3320	3480	1890
	MANGANESE	1800	390		155	312	171	606	159	327	358	162	349	295	196	887	1100	154
	MERCURY	23	23		0.019 U	0.017 U	0.008 J	0.018 U	0.008 J	0.014 J	0.017 U	0.01 J	0.01 J	0.02 J	0.02 J	0.02 J	0.021 U	0.03 J

DARK SHADING - EXCEEDS CRITERION; LIGHT SHADING - DETECTED; U - NOT DETECTED;
UJ - DETECTION LIMIT APPROXIMATE; J - QUANTITATION APPROXIMATE; R - REJECTED; NA - NOT ANALYZED

TABLE 3-4
SUBSURFACE SOIL ANALYTICAL RESULTS
SITE 08, NUSC DISPOSAL AREA
SUPPLEMENTAL REMEDIAL INVESTIGATION REPORT
NAVAL STATION NEWPORT, RHODE ISLAND

	SAMPLE ID	Benchmarks			B179-SB1-0507	B179-SB2-0709	B179-SB2-0204-AVG	B179-SB3-0709	B179-SB3-0406	B185A1-SB1-0103	B185A1-SB1-0708	B185A1-SB2-0103	B185A1-SB2-0305	B185A1-SB3-0103	B185A1-SB3-0305	B185A1-SB4-0103	B185A1-SB4-0507	B185A3-SB1-0103
	LOCATION ID				B179-SB1	B179-SB2	B179-SB2	B179-SB3	B179-SB3	B185A1-SB1	B185A1-SB1	B185A1-SB2	B185A1-SB2	B185A1-SB3	B185A1-SB3	B185A1-SB4	B185A1-SB4	B185A3-SB1
	TOP DEPTH				5	7	2	7	4	1	7	1	3	1	3	1	5	1
	BOTTOM DEPTH				7	9	4	9	6	3	8	3	5	3	5	3	7	3
	SAMPLE DATE				07/27/10	07/27/10	11/22/10	07/27/10	11/22/10	07/28/10	07/28/10	07/28/10	07/28/10	07/28/10	07/28/10	07/28/10	07/28/10	07/28/10
	SAMPLE CODE				NORMAL	NORMAL	AVG	NORMAL	NORMAL	NORMAL	NORMAL	NORMAL	NORMAL	NORMAL	NORMAL	NORMAL	NORMAL	NORMAL
FRACTION (UNITS)	PARAMETER	ORNL SLDCR	RIDEM DCR	PAL														
	MOLYBDENUM	390			0.76 UJ	1.5 J	0.2 J	1.7 UJ	0.23 J	0.52 U	1.5 UJ	0.24 U	1.2 UJ	0.38 U	0.53 U	1.1 U	1.3 U	0.33 U
	NICKEL	1600	1000		13.6	15.3	14.4	26	8	21.9	38.2	18.7	25.1	21.7	12.1	17.1	20.8	12.3
	POTASSIUM				464 J	1200 J	392	676 J	661	412	299	500	292	481	459	448	672	428
	SELENIUM	390	390		0.67 U	0.72 J	0.368 J	1.9 J	0.35 J	1.4 U	1.3 J	1.5 U	1.5 J	1.2 J	1.4	0.96 J	0.96 J	1.4
	SILVER	390	200		0.48 J	0.55 UJ	0.168 J	0.83 UJ	0.31 UJ	0.11 J	0.39 J	0.22 J	0.32 J	0.48 J	0.31 J	0.39 J	0.69 J	0.34 J
	SODIUM				172	112	64.2 J	107	127	45.1 U	39.1 U	52 U	70.7 J	64 J	102 J	46.2 U	66.2 J	42.5 J
	THALLIUM	5.1	5.5		0.05 J	0.09 J	0.06 J	0.08 J	0.08	0.06 J	0.01 J	0.06 J	0.05 J	0.06 J	0.08 J	0.07 J	0.1 J	0.09 J
	VANADIUM	390	550		20.2	15.1	19	19	12.5	17.5	19.2	18.4	19.6	19	19.8	23.4	22.4	18.1
	ZINC	23000	6000		32.5	42.4	38.2	62.7	27.9	54.4	81.9	70.4	70.8	52.6	38.8	48.8	50.6	43.4

DARK SHADING - EXCEEDS CRITERION; LIGHT SHADING - DETECTED; U - NOT DETECTED;
UJ - DETECTION LIMIT APPROXIMATE; J - QUANTITATION APPROXIMATE; R - REJECTED; NA - NOT ANALYZED

TABLE 3-4
SUBSURFACE SOIL ANALYTICAL RESULTS
SITE 08, NUSC DISPOSAL AREA
SUPPLEMENTAL REMEDIAL INVESTIGATION REPORT
NAVAL STATION NEWPORT, RHODE ISLAND

	SAMPLE ID	Benchmarks			B185A3-SB1-0305	127B-S-3-070910-4-6	128B-071210-2-4	128B-071210-4-6
	LOCATION ID				B185A3-SB1	DA-SB127B	DA-SB128B	DA-SB128B
	TOP DEPTH				3	4	2	4
	BOTTOM DEPTH				5	6	4	6
	SAMPLE DATE				07/28/10	07/09/10	07/12/10	07/12/10
	SAMPLE CODE				NORMAL	NORMAL	NORMAL	NORMAL
FRACTION (UNITS)	PARAMETER	ORNL SLDCR	RIDEM DCR	PAL				
VOLATILES (UG/KG)	1,1,1-TRICHLOROETHANE				2 U	2.5 U	2.5 U	2.3 U
	1,1-DICHLOROETHANE				2 U	2.5 U	2.5 U	2.3 U
	1,2,4-TRIMETHYLBENZENE	67000			2 U	2.5 U	2.5 U	2.3 U
	2-BUTANONE	28000000	10000000		9.9 U	12 U	12 U	12 U
	ACETONE	61000000	7800000		44 U	14 U	46 U	13 U
	BTEX				2.25 U	2.81 U	2.81 U	2.59 U
	CARBON DISULFIDE	670000			2 U	2.5 U	2.5 U	2.3 U
	CIS-1,2-DICHLOROETHENE	780000	630000		2 U	2.5 U	2.5 U	2.3 U
	ETHYLBENZENE	5700	71000		2 U	2.5 U	2.5 U	2.3 U
	ISOPROPYLBENZENE	2200000			2 U	2.5 U	2.5 U	2.3 U
	N-BUTYLBENZENE				2 U	2.5 U	2.5 U	2.3 U
	N-PROPYLBENZENE				2 U	2.5 UJ	2.5 UJ	2.3 UJ
	SEC-BUTYLBENZENE				2 U	2.5 UJ	2.5 UJ	2.3 UJ
	TERT-BUTYLBENZENE				2 U	2.5 U	2.5 U	2.3 U
	TETRACHLOROETHENE	570	12000		2 U	2.5 U	2.5 U	2.3 U
	TOTAL 1,2-DICHLOROETHENE	700000			2 U	2.5 U	2.5 U	2.3 U
	TOTAL CHLORINATED ETHENES				2.4 U	1.1 J	3 U	2.76 U
	TOTAL CHLORINATED VOCS				2.37 U	1.1 J	2.96 UJ	2.73 UJ
	TRANS-1,2-DICHLOROETHENE				2 U	2.5 U	2.5 U	2.3 U
	TRICHLOROETHENE	2800	13000		2 U	1.1 J	2.5 U	2.3 U
	VINYL CHLORIDE	60	20		4 U	5 U	5 U	4.6 U
SEMIVOLATILES (UG/KG)	2-METHYLNAPHTHALENE	310000	123000		11 U	NA	NA	NA
	2-NITROANILINE				670 U	NA	NA	NA
	ACENAPHTHENE	3400000	43000		11 U	NA	NA	NA
	ACENAPHTHYLENE	3400000	23000		11 U	NA	NA	NA
	ANTHRACENE	17000000	35000		11 U	NA	NA	NA
	BENZO(A)ANTHRACENE	150	900		11 U	NA	NA	NA
	BENZO(A)PYRENE	15	400		11 U	NA	NA	NA
	BENZO(B)FLUORANTHENE	150	900		11 U	NA	NA	NA
	BENZO(G,H,I)PERYLENE	1700000	800		11 U	NA	NA	NA
	BENZO(K)FLUORANTHENE	1500	900		11 U	NA	NA	NA
	BIS(2-ETHYLHEXYL)PHTHALATE				270 U	NA	NA	NA
	CHRYSENE	15000	400		11 U	NA	NA	NA
	DIBENZO(A,H)ANTHRACENE	15	400		11 U	NA	NA	NA
	FLUORANTHENE	2300000	20000		11 U	NA	NA	NA
	FLUORENE	2300000	28000		11 U	NA	NA	NA

DARK SHADING - EXCEEDS CRITERION; LIGHT SHADING - DETECTED; U - NOT DETECTED;
UJ - DETECTION LIMIT APPROXIMATE; J - QUANTITATION APPROXIMATE; R - REJECTED; NA - NOT ANALYZED

TABLE 3-4
SUBSURFACE SOIL ANALYTICAL RESULTS
SITE 08, NUSC DISPOSAL AREA
SUPPLEMENTAL REMEDIAL INVESTIGATION REPORT
NAVAL STATION NEWPORT, RHODE ISLAND

	SAMPLE ID	Benchmarks			B185A3-SB1-0305	127B-S-3-070910-4-6	128B-071210-2-4	128B-071210-4-6
	LOCATION ID				B185A3-SB1	DA-SB127B	DA-SB128B	DA-SB128B
	TOP DEPTH				3	4	2	4
	BOTTOM DEPTH				5	6	4	6
	SAMPLE DATE				07/28/10	07/09/10	07/12/10	07/12/10
	SAMPLE CODE				NORMAL	NORMAL	NORMAL	NORMAL
FRACTION (UNITS)	PARAMETER	ORNL SLDCR	RIDEM DCR	PAL				
	HIGH MOLECULAR WEIGHT PAHS				11 U	NA	NA	NA
	INDENO(1,2,3-CD)PYRENE	150	900		11 U	NA	NA	NA
	LOW MOLECULAR WEIGHT PAHS				11 U	NA	NA	NA
	NAPHTHALENE	3900	54000		11 U	NA	NA	NA
	PHENANTHRENE	1700000	40000		11 U	NA	NA	NA
	PYRENE	1700000	13000		11 U	NA	NA	NA
	TOTAL CARCINOGENIC PAHS-HALFND				11 U	NA	NA	NA
	TOTAL CARCINOGENIC PAHS-POS				11 U	NA	NA	NA
	TOTAL PAHS				11 U	NA	NA	NA
PESTICIDES/PCBS (UG/KG)	4,4'-DDD	2000			1.9 U	NA	NA	NA
	4,4'-DDE	1400			1.9 U	NA	NA	NA
	4,4'-DDT	1700			1.9 U	NA	NA	NA
	DELTA-BHC				0.98 U	NA	NA	NA
	DIELDRIN	30	40		1.9 U	NA	NA	NA
	ENDOSULFAN I				0.98 U	NA	NA	NA
	ENDOSULFAN II	370000			1.9 U	NA	NA	NA
	ENDRIN KETONE				1.9 UJ	NA	NA	NA
	GAMMA-CHLORDANE	1600	500		0.98 U	NA	NA	NA
	HEPTACHLOR	110			0.98 U	NA	NA	NA
	HEXACHLOROBENZENE				1.9 U	NA	NA	NA
	TOTAL CHLORDANE				0.98 U	NA	NA	NA
	TOTAL DDD/DDE/DDT				1.9 U	NA	NA	NA
EXPLOSIVES (UG/KG)	1,2-PROPYLENE GLYCOL DINITRATE			60000	100 U	NA	NA	NA
METALS (MG/KG)	ALUMINUM	77000			11700	NA	NA	NA
	ARSENIC	0.39	7		4.6	NA	NA	NA
	BARIUM	15000	5500		33.5	NA	NA	NA
	BERYLLIUM	160	0.4		0.4	NA	NA	NA
	CALCIUM				1430	NA	NA	NA
	CHROMIUM	230	390		12.4	NA	NA	NA
	COBALT	23			7.2	NA	NA	NA
	COPPER	3100	3100		13.6	NA	NA	NA
	IRON	55000			15900	NA	NA	NA
	LEAD	400	150		7.6	NA	NA	NA
	MAGNESIUM				2690	NA	NA	NA
	MANGANESE	1800	390		214	NA	NA	NA
	MERCURY	23	23		0.018 U	NA	NA	NA

DARK SHADING - EXCEEDS CRITERION; LIGHT SHADING - DETECTED; U - NOT DETECTED;
UJ - DETECTION LIMIT APPROXIMATE; J - QUANTITATION APPROXIMATE; R - REJECTED; NA - NOT ANALYZED

TABLE 3-4
SUBSURFACE SOIL ANALYTICAL RESULTS
SITE 08, NUSC DISPOSAL AREA
SUPPLEMENTAL REMEDIAL INVESTIGATION REPORT
NAVAL STATION NEWPORT, RHODE ISLAND

	SAMPLE ID	Benchmarks			B185A3-SB1-0305	127B-S-3-070910-4-6	128B-071210-2-4	128B-071210-4-6
	LOCATION ID				B185A3-SB1	DA-SB127B	DA-SB128B	DA-SB128B
	TOP DEPTH				3	4	2	4
	BOTTOM DEPTH				5	6	4	6
	SAMPLE DATE				07/28/10	07/09/10	07/12/10	07/12/10
	SAMPLE CODE				NORMAL	NORMAL	NORMAL	NORMAL
FRACTION (UNITS)	PARAMETER	ORNL SLDCR	RIDEM DCR	PAL				
	MOLYBDENUM	390			0.22 U	NA	NA	NA
	NICKEL	1600	1000		16.4	NA	NA	NA
	POTASSIUM				690	NA	NA	NA
	SELENIUM	390	390		0.51 J	NA	NA	NA
	SILVER	390	200		0.08 J	NA	NA	NA
	SODIUM				46.6 J	NA	NA	NA
	THALLIUM	5.1	5.5		0.07 J	NA	NA	NA
	VANADIUM	390	550		18.2	NA	NA	NA
	ZINC	23000	6000		40.5	NA	NA	NA

DARK SHADING - EXCEEDS CRITERION; LIGHT SHADING - DETECTED; U - NOT DETECTED;
UJ - DETECTION LIMIT APPROXIMATE; J - QUANTITATION APPROXIMATE; R - REJECTED; NA - NOT ANALYZED

TABLE 3-5
SURFACE WATER ANALYTICAL RESULTS
SITE 08, NUSC DISPOSAL AREA
SUPPLEMENTAL REMEDIAL INVESTIGATION REPORT
NAVAL STATION NEWPORT, RHODE ISLAND

	SAMPLE ID	Benchmarks						DA-SW-B179-01-0610-AVG	DA-SW-B179-02-0610	DA-SW-B179-04-0610
	LOCATION ID							DA-SW/SD179	DA-SW/SD179	DA-SW/SD179
	TOP DEPTH									
	BOTTOM DEPTH									
	SAMPLE DATE							06/25/10	06/25/10	06/25/10
	SAMPLE CODE							AVG	NORMAL	NORMAL
FRACTION (UNITS)	PARAMETER	ORNL TW	EPA MCL	RIDEM GA GW OBJ	EPA GW VOL	ECO SL	PAL			
SEMIVOLATILES (UG/L)	1,1-BIPHENYL							7.25 U	7.6 U	7.8 U
	1,2,4-TRICHLOROBENZENE							7.25 U	7.6 U	7.8 U
	1,2-DICHLOROBENZENE							7.25 U	7.6 U	7.8 U
	1,2-DIPHENYLHYDRAZINE							14 U	15 U	16 U
	1,3-DICHLOROBENZENE							7.25 U	7.6 U	7.8 U
	1,4-DICHLOROBENZENE	0.43	75	75				7.25 U	7.6 U	7.8 U
	1,4-DIOXANE						0.354	0.48 U	0.51 U	0.52 U
	2,2'-OXYBIS(1-CHLOROPROPANE)							7.25 U	7.6 U	7.8 U
	2,4,5-TRICHLOROPHENOL							18 U	19 U	20 U
	2,4,6-TRICHLOROPHENOL							7.25 U	7.6 U	7.8 U
	2,4-DICHLOROPHENOL							7.25 U	7.6 U	7.8 U
	2,4-DIMETHYLPHENOL							7.25 U	7.6 U	7.8 U
	2,4-DINITROPHENOL							18 U	19 U	20 U
	2,4-DINITROTOLUENE							7.25 U	7.6 U	7.8 U
	2,6-DICHLOROPHENOL							7.25 U	7.6 U	7.8 U
	2,6-DINITROTOLUENE							7.25 U	7.6 U	7.8 U
	2-CHLORONAPHTHALENE							7.25 U	7.6 U	7.8 U
	2-CHLOROPHENOL							7.25 U	7.6 U	7.8 U
	2-METHYLNAPHTHALENE							7.25 U	7.6 U	7.8 U
	2-METHYLPHENOL							7.25 U	7.6 U	7.8 U
	2-NITROANILINE							18 U	19 U	20 U
	2-NITROPHENOL							7.25 U	7.6 U	7.8 U
	3&4-METHYLPHENOL							7.25 U	7.6 U	7.8 U
	3,3'-DICHLOROBENZIDINE							7.25 U	7.6 U	7.8 U
	3-NITROANILINE							18 U	19 U	20 U
	4,6-DINITRO-2-METHYLPHENOL							18 U	19 U	20 U
	4-BROMOPHENYL PHENYL ETHER							7.25 U	7.6 U	7.8 U
	4-CHLORO-3-METHYLPHENOL							7.25 U	7.6 U	7.8 U

DARK SHADING - EXCEEDS CRITERION; LIGHT SHADING - DETECTED; U - NOT DETECTED;
UJ - DETECTION LIMIT APPROXIMATE; J - QUANTITATION APPROXIMATE; R - REJECTED; NA - NOT ANALYZED

TABLE 3-5
SURFACE WATER ANALYTICAL RESULTS
SITE 08, NUSC DISPOSAL AREA
SUPPLEMENTAL REMEDIAL INVESTIGATION REPORT
NAVAL STATION NEWPORT, RHODE ISLAND

	SAMPLE ID	Benchmarks						DA-SW-B179-01-0610-AVG	DA-SW-B179-02-0610	DA-SW-B179-04-0610
	LOCATION ID							DA-SW/SD179	DA-SW/SD179	DA-SW/SD179
	TOP DEPTH									
	BOTTOM DEPTH									
	SAMPLE DATE							06/25/10	06/25/10	06/25/10
	SAMPLE CODE							AVG	NORMAL	NORMAL
FRACTION (UNITS)	PARAMETER	ORNL TW	EPA MCL	RIDEM GA GW OBJ	EPA GW VOL	ECO SL	PAL			
	4-CHLOROANILINE							7.25 U	7.6 U	7.8 U
	4-CHLOROPHENYL PHENYL ETHER							7.25 U	7.6 U	7.8 U
	4-NITROANILINE							18 U	19 U	20 U
	4-NITROPHENOL							18 U	19 U	20 U
	ACENAPHTHENE							7.25 U	7.6 U	7.8 U
	ACENAPHTHYLENE							7.25 U	7.6 U	7.8 U
	ANTHRACENE							7.25 U	7.6 U	7.8 U
	BENZIDINE							36 UR	38 UR	39 UR
	BENZO(A)ANTHRACENE							7.25 U	7.6 U	7.8 U
	BENZO(A)PYRENE							7.25 U	7.6 U	7.8 U
	BENZO(B)FLUORANTHENE							7.25 U	7.6 U	7.8 U
	BENZO(G,H,I)PERYLENE							7.25 U	7.6 U	7.8 U
	BENZO(K)FLUORANTHENE	0.29						7.25 U	7.6 U	7.8 U
	BENZOIC ACID							18 UR	19 UR	20 UR
	BENZYL ALCOHOL	18000						14 U	15 U	16 U
	BIS(2-CHLOROETHOXY)METHANE							7.25 U	7.6 U	7.8 U
	BIS(2-CHLOROETHYL)ETHER							7.25 U	7.6 U	7.8 U
	BIS(2-ETHYLHEXYL)PHTHALATE	4.8	6	6				5.55 U	9.1 U	6.5 U
	BUTYL BENZYL PHTHALATE							7.25 U	7.6 U	7.8 U
	CARBAZOLE							7.25 U	7.6 U	7.8 U
	CHRYSENE							7.25 U	7.6 U	7.8 U
	DIBENZO(A,H)ANTHRACENE							7.25 U	7.6 U	7.8 U
	DIBENZOFURAN							7.25 U	7.6 U	7.8 U
	DIETHYL PHTHALATE							7.25 U	7.6 U	7.8 U
	DIMETHYL PHTHALATE							7.25 U	7.6 U	7.8 U
	DI-N-BUTYL PHTHALATE	3700						7.25 U	7.6 U	7.8 U
	DI-N-OCTYL PHTHALATE							7.25 U	7.6 U	7.8 U
	FLUORANTHENE							7.25 U	7.6 U	7.8 U
	FLUORENE							7.25 U	7.6 U	7.8 U
	HEXACHLOROBENZENE							7.25 U	7.6 U	7.8 U
	HEXACHLOROBUTADIENE							7.25 U	7.6 U	7.8 U
	HEXACHLOROETHANE							7.25 U	7.6 U	7.8 U

DARK SHADING - EXCEEDS CRITERION; LIGHT SHADING - DETECTED; U - NOT DETECTED;
UJ - DETECTION LIMIT APPROXIMATE; J - QUANTITATION APPROXIMATE; R - REJECTED; NA - NOT ANALYZED

TABLE 3-5
SURFACE WATER ANALYTICAL RESULTS
SITE 08, NUSC DISPOSAL AREA
SUPPLEMENTAL REMEDIAL INVESTIGATION REPORT
NAVAL STATION NEWPORT, RHODE ISLAND

	SAMPLE ID	Benchmarks						DA-SW-B179-01-0610-AVG	DA-SW-B179-02-0610	DA-SW-B179-04-0610
	LOCATION ID							DA-SW/SD179	DA-SW/SD179	DA-SW/SD179
	TOP DEPTH									
	BOTTOM DEPTH									
	SAMPLE DATE							06/25/10	06/25/10	06/25/10
	SAMPLE CODE							AVG	NORMAL	NORMAL
FRACTION (UNITS)	PARAMETER	ORNL TW	EPA MCL	RIDEM GA GW OBJ	EPA GW VOL	ECO SL	PAL			
	HIGH MOLECULAR WEIGHT PAHS							7.25 U	7.6 U	7.8 U
	INDENO(1,2,3-CD)PYRENE							7.25 U	7.6 U	7.8 U
	ISOPHORONE							7.25 U	7.6 U	7.8 U
	LOW MOLECULAR WEIGHT PAHS							7.25 U	7.6 U	7.8 U
	NAPHTHALENE							7.25 U	7.6 U	7.8 U
	NITROBENZENE							7.25 U	7.6 U	7.8 U
	N-NITROSODIMETHYLAMINE							7.25 U	7.6 U	7.8 U
	N-NITROSO-DI-N-PROPYLAMINE							7.25 U	7.6 U	7.8 U
	N-NITROSODIPHENYLAMINE							7.25 U	7.6 U	7.8 U
	N-NITROSOPYRROLIDINE							7.25 U	7.6 U	7.8 U
	PENTACHLOROPHENOL							18 U	19 U	20 U
	PHENANTHRENE	1100						7.25 U	7.6 U	7.8 U
	PHENOL							7.25 U	7.6 U	7.8 U
	PYRENE							7.25 U	7.6 U	7.8 U
	TOTAL CARCINOGENIC PAHS-HALFND							7.25 U	7.6 U	7.8 U
	TOTAL CARCINOGENIC PAHS-POS							7.25 U	7.6 U	7.8 U
	TOTAL CHLORINATED VOCS							7.25 U	7.6 U	7.8 U
	TOTAL PAHS							7.25 U	7.6 U	7.8 U

DARK SHADING - EXCEEDS CRITERION; LIGHT SHADING - DETECTED; U - NOT DETECTED;
UJ - DETECTION LIMIT APPROXIMATE; J - QUANTITATION APPROXIMATE; R - REJECTED; NA - NOT ANALYZED

TABLE 3-6
SEDIMENT ANALYTICAL RESULTS
SITE 08, NUSC DISPOSAL AREA
SUPPLEMENTAL REMEDIAL INVESTIGATION REPORT
NAVAL STATION NEWPORT, RHODE ISLAND

	SAMPLE ID	Benchmarks					DA-SD-B179-02-0006	DA-SD-B179-04-0006	DA-SD-B179-01-0006-AVG	DA-SD-B179-01-081210	DA-SD-B179-02-081210-AVG	DA-SD-B179-04-081210
	LOCATION ID						DA-SW/SD179	DA-SW/SD179	DA-SW/SD179	DA-SD-B179-01	DA-SD-B179-02	DA-SD-B179-04
	TOP DEPTH						0	0	0			
	BOTTOM DEPTH						0.5	0.5	0.5			
	SAMPLE DATE						06/25/10	06/25/10	06/25/10	08/12/10	08/12/10	08/12/10
	SAMPLE CODE						NORMAL	NORMAL	AVG	NORMAL	AVG	NORMAL
FRACTION (UNITS)	PARAMETER	ORNL SLDCR	ORNL SLPOG	RIDEM DCR	RIDEM POG	ECO SL				TBD	TBD	TBD
VOLATILES (UG/KG)	1,1,1-TRICHLOROETHANE					170	3 U	1.6 J	NA	6.8 U	NA	NA
	1,1-DICHLOROETHANE					27	3 U	3.7 J	NA	6.8 U	NA	NA
	ACETONE	61000000	4400	7800000		9	27 J	11 UJ	NA	120 J	NA	NA
	CARBON DISULFIDE	670000	270			0.85	2.1 U	1.3 U	NA	14 J	NA	NA
	TOTAL CHLORINATED VOCS						3.56 UJ	5.3 J	NA	8.13 UJ	NA	NA
SEMIVOLATILES (UG/KG)	2-METHYLNAPHTHALENE	310000	900	123000		20.2	16 U	12 U	23.5 J	NA	NA	NA
	ACENAPHTHENE	3400000	27000	43000		290	44	12 J	155 J	NA	NA	NA
	ANTHRACENE	17000000	450000	35000		57.2	72	26	210 J	NA	NA	NA
	BENZO(A)ANTHRACENE	150	14	900		108	250	71	780	NA	NA	NA
	BENZO(A)PYRENE	15	4.6	400	240000	150	250	69	590 J	NA	NA	NA
	BENZO(B)FLUORANTHENE	150	47	900		1800	400	120	845	NA	NA	NA
	BENZO(G,H,I)PERYLENE	1700000	150000	800		170	330	43	300	NA	NA	NA
	BENZO(K)FLUORANTHENE	1500	460	900		240	120	47	235	NA	NA	NA
	CARBAZOLE						380 U	290 U	230 J	NA	NA	NA
	CHRYSENE	15000	1400	400		166	220	74	735	NA	NA	NA
	DIBENZO(A,H)ANTHRACENE	15	15	400		33	43	12 J	81.5	NA	NA	NA
	DIBENZOFURAN					2000	380 U	290 U	180 J	NA	NA	NA
	FLUORANTHENE	2300000	210000	20000		423	710	160	1800 J	NA	NA	NA
	FLUORENE	2300000	33000	28000		77.4	43	8.9 J	180 J	NA	NA	NA
	HIGH MOLECULAR WEIGHT PAHS					193	3400	796 J	7140 J	NA	NA	NA
	INDENO(1,2,3-CD)PYRENE	150	160	900		200	230	60	325	NA	NA	NA
	LOW MOLECULAR WEIGHT PAHS					76.4	560 J	150 J	2120 J	NA	NA	NA
	NAPHTHALENE	3900	0.55	54000	800	176	21 J	5.1 J	134 J	NA	NA	NA
	PHENANTHRENE	1700000	150000	40000		204	380	98	1420 J	NA	NA	NA
	PYRENE	1700000	150000	13000		195	850	140	1450	NA	NA	NA
	TOTAL CARCINOGENIC PAHS-HALFND						1510	453 J	3590 J	NA	NA	NA
	TOTAL CARCINOGENIC PAHS-POS						1510	453 J	3590 J	NA	NA	NA
	TOTAL PAHS					1610	3960 J	946 J	9250 J	NA	NA	NA
PETROLEUM HYDROCARBONS (MG/KG)	TPH (C09-C36)			500	500		NA	NA	NA	640 J	255 J	34 J

DARK SHADING - EXCEEDS CRITERION; LIGHT SHADING - DETECTED; U - NOT DETECTED;
UJ - DETECTION LIMIT APPROXIMATE; J - QUANTITATION APPROXIMATE; R - REJECTED; NA - NOT ANALYZED

TABLE 4-1
EPA RISK SCREENING CRITERIA AND STATE REMEDIATION CRITERIA FOR SOIL AND SEDIMENT
SITE 08, NUSC DISPOSAL AREA
NAVAL STATION NEWPORT, RHODE ISLAND

CAS No.	Parameter	EPA Regional Screening Levels (RSLs)[1]		Rhode Island Department of Environmental Management[2]	
		Direct Contact Residential	Protection of Groundwater	Direct Exposure Residential	GA Leachability Criteria
Volatile Organic Compounds (ug/kg)					
71-55-6	1,1,1-Trichloroethane	870,000 N	3,200	540,000	11,000
75-34-3	1,1-Dichloroethane	3,300 C	0.69	920,000	700
95-63-6	1,2,4-Trimethylbenzene	6,200 N	21	NA	NA
78-93-3	2-Butanone	2,800,000 N	1,500	10,000,000	NA
591-78-6	2-Hexanone	21,000 N	11	NA	NA
156-59-2	cis-1,2-Dichloroethene	78,000 N	110	630,000	1,700
540-59-0	Total 1,2-Dichloroethene	70,000 N	97	NA	NA
156-60-5	trans-1,2-Dichloroethene	15,000 N	31	1,100,000	3,300
67-64-1	Acetone	6,100,000 N	4,500	7,800,000	NA
75-15-0	Carbon Disulfide	82,000 N	310	NA	NA
67-66-3	Chloroform	290 C	0.053	1,200	NA
100-41-4	Ethylbenzene	5,400 C	1.7	71,000	27,000
98-82-8	Isopropylbenzene	210,000 N	1,100	27,000	NA
68411-44-9	N-Butylbenzene	NA	NA	NA	NA
103-65-1	N-Propylbenzene	340,000 N	2,500	NA	NA
135-98-8	sec-Butylbenzene	NA	NA	NA	NA
98-06-6	tert-Butylbenzene	NA	NA	NA	NA
127-18-4	Tetrachloroethene	550 C	0.049	12,000	100
79-01-6	Trichloroethene	2,800 C	0.72	13,000	200
75-01-4	Vinyl Chloride	60 C	0.0056	20	300
Semivolatile Organic Compounds (ug/kg)					
92-52-4	1,1-Biphenyl	390,000 N	19,000	800	NA
91-57-6	2-Methylnaphthalene	31,000 N	750	123,000	NA
88-74-4	2-Nitroaniline	61,000 N	150	NA	NA
83-32-9	Acenaphthene	340,000 N	22,000	43,000	NA
208-96-8	Acenaphthylene	340,000 N[3]	22,000 [3]	23,000	NA
120-12-7	Anthracene	1,700,000 N	360,000	35,000	NA
56-55-3	Benzo(a)anthracene	150 C	10	900	NA
50-32-8	Benzo(a)pyrene	15 C	3.5	400	240,000
205-99-2	Benzo(b)fluoranthene	150 C	35	900	NA
191-24-2	Benzo(g,h,i)perylene	170,000 N[4]	120,000 [4]	800	NA
207-08-9	Benzo(k)fluoranthene	1,500 C	350	900	NA
117-81-7	Bis(2-ethylhexyl)phthalate	35,000 C	1,100	46,000	120,000
86-74-8	Carbazole	NA	NA	NA	NA
218-01-9	Chrysene	15,000 C	1,100	400	NA
53-70-3	Dibenzo(a,h)anthracene	15 C	11	400	NA
132-64-9	Dibenzofuran	7,800 N	680	NA	NA
84-74-2	di-n-Butyl Phthalate	610,000 N	9,200	NA	NA
206-44-0	Fluoranthene	230,000 N	160,000	20,000	NA
86-73-7	Fluorene	230,000 N	27,000	28,000	NA
193-39-5	Indeno(1,2,3-cd)pyrene	150 C	120	900	NA
91-20-3	Naphthalene	3,600 C	0.47	54,000	800
85-01-8	Phenanthrene	170,000 N[4]	120,000 [4]	40,000	NA
129-00-0	Pyrene	170,000 N	120,000	13,000	NA
Semivolatile Organic Compounds (ug/kg) (Continued)					
50-32-8	Benzo(a)pyrene Equivalents	15 C	NA	400	NA
Energetics (ug/kg)					
6423-43-4	1,2-Propylene Glycol Dinitrate	5,700 N	0.18	NA	NA
Pesticides/PCBs (ug/kg)					
72-54-8	4,4'-DDD	2,000 C	66	NA	NA
72-55-9	4,4'-DDE	1,400 C	47	NA	NA
50-29-3	4,4'-DDT	1,700 C	67	NA	NA
319-86-8	delta-BHC	77 C[5]	0.062	NA	NA
60-57-1	Dieldrin	30 C	0.17	40	NA
959-98-8	Endosulfan I	37,000 N[6]	3,000 [6]	NA	NA
33213-65-9	Endosulfan II	37,000 N[6]	3,000 [6]	NA	NA
1031-07-8	Endosulfan Sulfate	37,000 N[6]	3,000 [6]	NA	NA
53494-70-5	Endrin Ketone	1,800 N[7]	440 [7]	NA	NA
58-89-9	gamma-BHC (Lindane)	520 C	0.36	NA	NA
5103-74-2	gamma-Chlordane	1600 C[8]	13 [8]	0.5 [8]	1,400 [8]
76-44-8	Heptachlor	110 C	1.2	NA	NA
118-74-1	Hexachlorobenzene	300 C	0.53	400	NA

TABLE 4-1
EPA RISK SCREENING CRITERIA AND STATE REMEDIATION CRITERIA FOR SOIL AND SEDIMENT
SITE 08, NUSC DISPOSAL AREA
NAVAL STATION NEWPORT, RHODE ISLAND

CAS No.	Parameter	EPA Regional Screening Levels (RSLs)[1]		Rhode Island Department of Environmental Management[2]	
		Direct Contact Residential	Protection of Groundwater	Direct Exposure Residential	GA Leachability Criteria
Metals (mg/kg)					
7429-90-5	Aluminum	7,700 N	55,000	NA	NA
7440-38-2	Arsenic	0.39 C	0.0013	7	NA
7440-39-3	Barium	1,500 N	300	5,500	[9]
7440-41-7	Beryllium	16 N	58	0.4	[9]
7440-43-9	Cadmium	7 N	1.4	39	[9]
7440-70-2	Calcium	NA	NA	NA	NA
7440-47-3	Chromium	12,000 N[10]	99,000,000 [10]	1,400 [10]	[9]
7440-48-4	Cobalt	2.3 N	0.49	NA	NA
7440-50-8	Copper	310 N	51	3,100	NA
7439-89-6	Iron	5,500 N	640	NA	NA
7439-92-1	Lead	400 [11]	14 [12]	150	[9]
7439-95-4	Magnesium	NA	NA	NA	NA
7439-96-5	Manganese	180 N	57	390	NA
7439-97-6	Mercury	2.3 N[13]	0.57 [13]	23	[9]
7439-98-7	Molybdenum	39 N	3.7	NA	NA
7440-02-0	Nickel	150 N	48	1,000	[9]
7440-09-7	Potassium	NA	NA	NA	NA
7782-49-2	Selenium	39 N	0.95	390	[9]
7440-22-4	Silver	39 N	1.6	200	NA
7440-23-5	Sodium	NA	NA	NA	NA
7440-28-0	Thallium	NA	NA	5.5	[9]
7440-62-2	Vanadium	39 N	180	550	NA
7440-66-6	Zinc	2,300 N	680	6,000	NA

Notes:

1 - EPA Regional Screening Levels (RSLs) for Chemical Contaminants at Superfund Sites (May 2010) used to screen COPCs. The noncarcinogenic values (denoted with a "N" flag) are the RSL divided by 10 to correspond to a target hazard quotient (HQ) of 0.1. Carcinogenic values represent an incremental cancer risk of 1.0E-06 (carcinogens denoted with a "C" flag).

2 - Rhode Island Department of Environmental Management (RIDEM), DEM-DSR-01-93, February 2004. The RIDEM values are presented for informational purposes in this SRI and were not used to screen COPCs. RIDEM criteria will be considered further in the Feasibility Study during the development of PRGs.

3 - Value is for acenaphthene.

4 - Value is for pyrene.

5 - Value is for alpha-BHC.

6 - Value is for Endosulfan.

7 - Value is for Endrin.

8 - Value is for chlordane.

9 - Leachability criteria for inorganics are based on SPLP/TCLP analysis.

10 - Value is for trivalent chromium.

11 - USEPA, 1994. Revised Interim Guidance on Establishing Soil Lead Guidance for CERCLA Sites and RCRA July 14. Corrective Action Facilities. OSWER Directive 9355.4-12,

12 - Value is MCL based soil screening level.

13 - Value is for mercury, inorganic salts

C - Carcinogenic.

N - Non-carcinogenic.

NA - No criteria available.

TABLE 4-2
EPA RISK SCREENING CRITERIA AND STATE REMEDIATION OBJECTIVES FOR GROUNDWATER
SITE 08, NUSC DISPOSAL AREA
SUPPLEMENTAL REMEDIAL INVESTIGATION REPORT
NAVAL STATION NEWPORT, RHODE ISLAND

CAS No.	Parameter	EPA Regional Screening Level[1] Tap Water	EPA MCL[2]	RIDEM GA Groundwater Objective[3]	USEPA Groundwater Volatilization Criteria[4]
Volatile Organic Compounds (ug/L)					
71-55-6	1,1,1-Trichloroethane	910 N	200	200	310 N
79-00-5	1,1,2-Trichloroethane	0.24 C	5	5	4.1 C[5]
75-34-3	1,1-Dichloroethane	2.4 C	NA	NA	220 N
75-35-4	1,1-Dichloroethene	34 N	7	7	19 N
95-63-6	1,2,4-Trimethylbenzene	1.5 N	NA	NA	2.4 N
108-67-8	1,3,5-Trimethylbenzene	37 N	NA	NA	2.5 N
67-64-1	Acetone	2,200 N	NA	NA	22,000 N
56-23-5	Carbon Tetrachloride	0.44 C	5	5	0.13 C[5]
75-00-3	Chloroethane	2,100 N	NA	NA	2,800 N
74-87-3	Chloromethane	19 N	NA	NA	6.7 C
156-59-2	cis-1,2-Dichloroethene	37 N	70	70	21 N
100-41-4	Ethylbenzene	1.5 C	700	700	3.04 C[5]
98-82-8	Isopropylbenzene	68 N	NA	NA	0.84 N
104-51-8	N-Butylbenzene	NA	NA	NA	26 N
103-65-1	N-Propylbenzene	130 N	NA	NA	32 N
95-47-6	o-Xylene	120 N	NA	NA	3,300 N
135-98-8	sec-Butylbenzene	NA	NA	NA	25 N
98-06-6	tert-Butylbenzene	NA	NA	NA	29 N
127-18-4	Tetrachloroethene	0.11 C	5	5	0.55 C[5]
108-88-3	Toluene	230 N	1,000	1000	150 N
540-59-0	Total 1,2-Dichloroethene	33 N	NA	NA	NA
1330-20-7	Total Xylenes	20 N	10,000	10000	2,200 N[6]
156-60-5	trans-1,2-Dichloroethene	11 N	100	100	18 N
79-01-6	Trichloroethene	2 C	5	5	2.9 C[5]
75-01-4	Vinyl Chloride	0.016 C	2	2	0.32 C[5]
Volatile Gases (ug/L)					
74-84-0	Ethane	NA	NA	NA	NA
74-85-1	Ethene	NA	NA	NA	NA
74-82-8	Methane	NA	NA	NA	NA
Semivolatile Organic Compounds (ug/L)					
123-91-1	1,4-Dioxane	6.1 C	NA	NA	NA
Energetics (ug/L)					
6423-43-4	1,2-Propylene Glycol Dinitrate	0.057 N	NA	NA	NA
Miscellaneous Parameters (mg/L)					
7664-41-7	Ammonia-N	NA	NA	NA	NA
14797-55-8	Nitrate-N	5.8 N	10	NA	NA
14797-65-0	Nitrite-N	0.37 N	1	NA	NA
14808-79-8	Sulfate	NA	NA	NA	NA
18496-25-8	Sulfide	NA	NA	NA	NA
--	Total Organic Carbon	NA	NA	NA	NA
Miscellaneous Parameters (ug/L)					
57-12-5	Cyanide	73 N	200	200	NA

Notes:

1 - EPA Regional Screening Levels (RSLs) for Chemical Contaminants at Superfund Sites (May 2010) used to screen COPCs. The noncarcinogenic values (denoted with a "N" flag) are the RSL divided by 10 to correspond to a target hazard quotient (HQ) of 0.1. Carcinogenic values represent an incremental cancer risk of 1.0E-06 (carcinogens denoted with a "C" flag).

2 - 2009 Edition of the Drinking Water Standards and Health Advisories (USEPA, October 2009).

3 - Rhode Island Department of Environmental Management (RIDEM), DEM-DSR-01-93, February 2004. The RIDEM values are presented for informational purposes in this SRI and were not used to screen COPCs. RIDEM criteria will be considered further in the Feasibility Study during the development of PRGs.

4 - Draft Guidance for Evaluating the Vapor Intrusion to Indoor Air Pathway from Groundwater and Soils, EPA530-F-02-052 (November 2002). Values are from Table 2c. Carcinogenic values correspond to a target cancer risk level of 1E-6. The noncarcinogenic values have been divided by 10 to correspond to a target hazard quotient (HQ) of 0.1.

5 - The value presented in Table 2c of the draft vapor intrusion guidance is based on the MCL. USEPA Region I requires the screening criteria for vapor intrusion to be risk-based. Therefore, the value from Table 2a based on a 1E-06 cancer risk level is presented here for carcinogenic compounds.

6 - Value is for p-xylenes.

TABLE 4-3
OCCURRENCE, DISTRIBUTION, AND SELECTION OF CHEMICALS OF POTENTIAL CONCERN - DIRECT CONTACT WITH SURFACE SOIL
SITE 08, NUSC DISPOSAL AREA
SUPPLEMENTAL REMEDIAL INVESTIGATION REPORT
NAVAL STATION NEWPORT, RHODE ISLAND

CAS Number	Chemical	Minimum Concentration[1]	Maximum Concentration[1]	Units	Sample of Maximum Concentration	Frequency of Detection	Range of Nondetects[2]	Site Concentration Used for Screening[3]	Range of Background Concentrations[4]	EPA RSL Residential Soil[5]	RIDEM Residential Direct Exposure Criteria[6]	COPC Flag	Rationale for Contaminant Deletion or Selection[7]
Volatile Organic Compounds													
71-55-6	1,1,1-Trichloroethane	1.8 J	1.8 J	ug/kg	B179-SB1-0001-AVG	1/4	2.4 - 2.9	1.8	NA	870,000 N	540,000	No	BSL
78-93-3	2-Butanone	5.8 J	17.5 J	ug/kg	B179-SB1-0001-AVG	4/6	12	17.5	NA	2,800,000 N	10,000,000	No	BSL
591-78-6	2-Hexanone	15 J	15 J	ug/kg	127B-S-1-070910-0-2	1/6	12 - 14.5	15	NA	21,000 N	NA	No	BSL
67-64-1	Acetone	98 J	250 J	ug/kg	B179-SB1-0001-AVG	3/6	38 - 74	250	NA	6,100,000 N	7,800,000	No	BSL
67-66-3	Chloroform	0.96 J	0.96 J	ug/kg	B179-SB1-0001-AVG	1/4	2.4 - 2.9	0.96	NA	290 C	1,200	No	BSL
79-01-6	Trichloroethene	1.02 J	1.02 J	ug/kg	B179-SB1-0001-AVG	1/4	2.4 - 2.9	1.02	NA	2,800 C	13,000	No	BSL
Semivolatile Organic Compounds													
92-52-4	1,1-Biphenyl	140 J	140 J	ug/kg	B179-SB1-0001-AVG	1/3	245 - 280	140	NA	390,000 N	800	No	BSL
91-57-6	2-Methylnaphthalene	5.45 J	350 J	ug/kg	B179-SB1-0001-AVG	2/3	12	350	NA	31,000 N	123,000	No	BSL
83-32-9	Acenaphthene	6.5 J	900 J	ug/kg	B179-SB1-0001-AVG	4/5	12	900	NA	340,000 N	43,000	No	BSL
208-96-8	Acenaphthylene	8.8 J	8.8 J	ug/kg	B179-SB3-0001-NOV2010	1/2	12	8.8	NA	340,000 N[8]	23,000	No	BSL
120-12-7	Anthracene	3.2 J	1,550	ug/kg	B179-SB1-0001-AVG	5/5	- - -	1,550	NA	1,700,000 N	35,000	No	BSL
56-55-3	**Benzo(a)anthracene**	19 J	3,600 J	ug/kg	B179-SB1-0001-AVG	5/5	- - -	3,600	52 - 79	**150 C**	**900**	**Yes**	ASL
50-32-8	**Benzo(a)pyrene**	19 J	2,550 J	ug/kg	B179-SB1-0001-AVG	5/5	- - -	2,550	51 - 95	**15 C**	**400**	**Yes**	ASL
205-99-2	**Benzo(b)fluoranthene**	28 J	3,750 J	ug/kg	B179-SB1-0001-AVG	5/5	- - -	3,750	51 - 130	**150 C**	**900**	**Yes**	ASL
191-24-2	**Benzo(g,h,i)perylene**	13 J	1,350 J	ug/kg	B179-SB1-0001-AVG	5/5	- - -	1,350	55 - 100	170,000 N[9]	**800**	**Yes**	ASL
207-08-9	**Benzo(k)fluoranthene**	9.7 J	1,230	ug/kg	B179-SB1-0001-AVG	5/5	- - -	1,230	52 - 110	1,500 C	**900**	**Yes**	ASL
117-81-7	Bis(2-ethylhexyl)phthalate	130 J	150 J	ug/kg	B179-SB1-0001-AVG	2/3	280 - 280	150	130 - 160	35,000 C	46,000	No	BSL
86-74-8	Carbazole	1,150	1,150	ug/kg	B179-SB1-0001-AVG	1/3	245 - 280	1,150	NA	NA	NA	No	NTX
218-01-9	**Chrysene**	20 J	3,350 J	ug/kg	B179-SB1-0001-AVG	5/5	- - -	3,350	54 - 140	15,000 C	**400**	**Yes**	ASL
53-70-3	**Dibenzo(a,h)anthracene**	12 J	445 J	ug/kg	B179-SB1-0001-AVG	3/5	11 - 12	445	NA	**15 C**	**400**	**Yes**	ASL
132-64-9	Dibenzofuran	800	800	ug/kg	B179-SB1-0001-AVG	1/3	245 - 280	800	NA	7,800 N	NA	No	BSL
84-74-2	di-n-Butyl Phthalate	300 J	300 J	ug/kg	B179-SB1-0001-AVG	1/3	245 - 280	300	NA	610,000 N	NA	No	BSL
206-44-0	Fluoranthene	30 J	6,850 J	ug/kg	B179-SB1-0001-AVG	5/5	- - -	6,850	56 - 230	230,000 N	20,000	No	BSL
86-73-7	Fluorene	10 J	1,150 J	ug/kg	B179-SB1-0001-AVG	4/5	12	1,150	NA	230,000 N	28,000	No	BSL
193-39-5	**Indeno(1,2,3-cd)pyrene**	14 J	1,800	ug/kg	B179-SB1-0001-AVG	5/5	- - -	1,800	60 - 98	**150 C**	**900**	**Yes**	ASL
91-20-3	Naphthalene	11.8 J	1,400	ug/kg	B179-SB1-0001-AVG	2/3	12	1,400	NA	3,600 C	54,000	No	BSL
85-01-8	Phenanthrene	23 J	8,850 J	ug/kg	B179-SB1-0001-AVG	5/5	- - -	8,850	51 - 95	170,000 N[9]	40,000	No	BSL
129-00-0	Pyrene	31 J	6,150 J	ug/kg	B179-SB1-0001-AVG	5/5	- - -	6,150	44 - 190	170,000 N	13,000	No	BSL
50-32-8	**Benzo(a)pyrene Equivalents**	31.417	3,926	ug/kg	B179-SB1-0001-AVG	5/5	- - -	3,926	NA	**15 C**	NA	**Yes**	ASL
Pesticides/PCBs													
72-54-8	4,4'-DDD	3.6 J	3.6 J	ug/kg	B179-SB3-0001-NOV2010	1/2	2 - 2	3.6	NA	2,000 C	NA	No	BSL
72-55-9	4,4'-DDE	0.395 J	3.2 J	ug/kg	B179-SB2-0001-NOV2010	4/5	1.9	3.2	5.4 - 43	1,400 C	NA	No	BSL
50-29-3	4,4'-DDT	0.82 J	1.6 J	ug/kg	B179-SB2-0001-NOV2010	3/5	1.9 - 5.5	1.6	3.6 - 23	1,700 C	NA	No	BSL
60-57-1	Dieldrin	0.72 J	0.72 J	ug/kg	B179-SB3-0001-AVG	1/3	1.75 - 1.9	0.72	13 - 26	30 C	40	No	BSL
1031-07-8	Endosulfan Sulfate	1.35 J	11	ug/kg	B179-SB1-0001-AVG	2/3	1.9	11	NA	37,000 N[10]	NA	No	BSL
58-89-9	gamma-BHC (Lindane)	8.72 J	8.72 J	ug/kg	B179-SB1-0001-AVG	1/3	0.855 - 0.98	8.72	NA	520 C	NA	No	BSL
118-74-1	Hexachlorobenzene	0.57 J	0.57 J	ug/kg	B179-SB3-0001-AVG	1/3	1.75 - 1.9	0.57	NA	300 C	400	No	BSL
Metals													
7429-90-5	**Aluminum**	3,280 J	13,100	mg/kg	B179-SB2-0001-NOV2010	5/5	- - -	13,100	3,520 - 17,900	**7,700 N**	NA	**Yes**	ASL
7440-38-2	**Arsenic**	0.53 J	5 J	mg/kg	B179-SB1-0001-AVG	5/5	- - -	5	0.83 - 71.7	**0.39 C**	7	**Yes**	ASL
7440-39-3	Barium	20.5 J	33.1 J	mg/kg	B179-SB2-0001	5/5	- - -	33.1	6.3 - 61	1,500 N	5,500	No	BSL
7440-41-7	**Beryllium**	0.205 J	0.43 J	mg/kg	B179-SB2-0001-NOV2010	5/5	- - -	0.43	0.12 - 0.79	16 N	**0.4**	**Yes**	ASL

TABLE 4-3
OCCURRENCE, DISTRIBUTION, AND SELECTION OF CHEMICALS OF POTENTIAL CONCERN - DIRECT CONTACT WITH SURFACE SOIL
SITE 08, NUSC DISPOSAL AREA
SUPPLEMENTAL REMEDIAL INVESTIGATION REPORT
NAVAL STATION NEWPORT, RHODE ISLAND

CAS Number	Chemical	Minimum Concentration[1]	Maximum Concentration[1]	Units	Sample of Maximum Concentration	Frequency of Detection	Range of Nondetects[2]	Site Concentration Used for Screening[3]	Range of Background Concentrations[4]	EPA RSL Residential Soil[5]	RIDEM Residential Direct Exposure Criteria[6]	COPC Flag	Rationale for Contaminant Deletion or Selection[7]
Metals (Continued)													
7440-43-9	Cadmium	0.905 J	0.905 J	mg/kg	B179-SB1-0001-AVG	1/3	0.045 - 0.085	0.905	0.068 - 0.53	7 N	39	No	BSL
7440-70-2	Calcium	766	2,580 J	mg/kg	B179-SB3-0001-AVG	5/5	- - -	2,580	222 - 4,830	NA	NA	No	NUT
7440-47-3	Chromium	3.3	18.7	mg/kg	B179-SB1-0001-AVG	5/5	- - -	18.7	4.8 - 28.2	120,000 N[11]	1,400 [11]	No	BSL
7440-48-4	**Cobalt**	1.9 J	6.65	mg/kg	B179-SB1-0001-AVG	5/5	- - -	6.65	0.85 - 13.8	**2.3 N**	NA	**Yes**	ASL
7440-50-8	Copper	2.6	18.8	mg/kg	B179-SB1-0001-AVG	5/5	- - -	18.8	1.6 - 20.3	310 N	3,100	No	BSL
7439-89-6	**Iron**	6,990	16,600	mg/kg	B179-SB1-0001-AVG	5/5	- - -	16,600	5,940 - 63,300	**5,500 N**	NA	**Yes**	ASL
7439-92-1	Lead	3.2	42.3	mg/kg	B179-SB1-0001-AVG	5/5	- - -	42.3	2.6 - 49.5	400	150	No	BSL
7439-95-4	Magnesium	1,380 J	2,470	mg/kg	B179-SB3-0001-NOV2010	5/5	- - -	2,470	555 - 2,930	NA	NA	No	NUT
7439-96-5	**Manganese**	142	324	mg/kg	B179-SB1-0001-AVG	5/5	- - -	324	27.9 - 615	**180 N**	390	**Yes**	ASL
7439-97-6	Mercury	0.02 J	1.25	mg/kg	B179-SB1-0001-AVG	3/5	0.016 - 0.017	1.25	0.016 - 0.68	2.3 N[12]	23	No	BSL
7439-98-7	Molybdenum	0.21 J	1.12 J	mg/kg	B179-SB1-0001-AVG	3/5	0.65 - 0.72	1.12	NA	39 N	NA	No	BSL
7440-02-0	Nickel	2 J	14.9	mg/kg	B179-SB1-0001-AVG	5/5	- - -	14.9	2.8 - 19.1	150 N	1,000	No	BSL
7440-09-7	Potassium	418 J	1,510 J	mg/kg	B179-SB2-0001	5/5	- - -	1,510	216 - 877	NA	NA	No	NUT
7782-49-2	Selenium	0.38 J	0.38 J	mg/kg	B179-SB2-0001-NOV2010	1/2	0.69	0.38	0.18 - 0.89	39 N	390	No	BSL
7440-22-4	Silver	0.27 J	5.1	mg/kg	B179-SB2-0001-NOV2010	4/5	0.4	5.1	NA	39 N	200	No	BSL
7440-23-5	Sodium	47.5 J	254	mg/kg	B179-SB1-0001-AVG	5/5	- - -	254	0.18 - 0.89	NA	NA	No	NUT
7440-28-0	Thallium	0.05 J	0.1 J	mg/kg	B179-SB2-0001	5/5	- - -	0.1	62.3 - 349	NA	5.5	No	BSL
7440-62-2	Vanadium	5.6	21.2	mg/kg	B179-SB2-0001-NOV2010	5/5	- - -	21.2	5.2 - 42.6	39 N	550	No	BSL
7440-66-6	Zinc	25.5	102	mg/kg	B179-SB1-0001-AVG	5/5	- - -	102	10.5 - 93.7	2,300 N	6,000	No	BSL

Footnotes:
1 - Sample and duplicate are considered as two separate samples when determining the minimum and maximum concentrations.
2 - Values presented are sample-specific quantitation limits.
3 - The maximum detected concentration is used for screening purposes.
4 - Background Study Report for Naval Station Newport (Tetra Tech, 2008)
5 - EPA Regional Screening Levels for Chemical Contaminants at Superfund Sites, May 2010. The noncarcinogenic values (denoted with a "N" flag) are the screening level divided by 10 to correspond to a target hazard quotient of 0.1. Carcinogenic values represent an incremental cancer risk of 1.0E-06 (carcinogens denoted with a "C" flag).
6 - Rhode Island Department of Environmental Management (RIDEM), DEM-DSR-01-93, February 2004.
7 - The chemical is selected as a COPC if the maximum detected concentration exceeds the risk-based COPC screening level.
8 - Value is for acenaphthene.
9 - Value is for pyrene.
10 - Value is for Endosulfan.
11 - Value is for trivalent chromium.
12 - Value is for mercury, inorganic salts
Shaded criterion indicates that the maximum detected concentration exceeds one or more screening criteria. Shaded chemical name indicates that the chemical was retained as a COPC.

Definitions:
C = Carcinogen
CAS = Chemical Abstracts Service
COPC = Chemical Of Potential Concern
J = Estimated value
N = Noncarcinogen
NA = Not Applicable/Not Available

Rationale Codes:
For selection as a COPC:
ASL = Above Screening Level.

For elimination as a COPC:
BSL = Below COPC Screening Level
NUT = Essential nutrient
NTX = No toxicity criteria

Associated Samples

B179-SB1-0001-AVG	127B-S-1-070910-0-2
B179-SB2-0001	B179-SB2-0001-NOV2010
B179-SB3-0001-AVG	B179-SB3-0001-NOV2010

TABLE 4-4
OCCURRENCE, DISTRIBUTION, AND SELECTION OF CHEMICALS OF POTENTIAL CONCERN - DIRECT CONTACT WITH SUBSURFACE SOIl
SITE 08, NUSC DISPOSAL AREA
SUPPLEMENTAL REMEDIAL INVESTIGATION REPORT
NAVAL STATION NEWPORT, RHODE ISLAND

CAS Number	Chemical	Minimum Concentration[1]	Maximum Concentration[1]	Units	Sample of Maximum Concentration	Frequency of Detection	Range of Nondetects[2]	Concentration Used for Screening[3]	Range of Background Concentrations[4]	EPA RSL Residential Soil[5]	RIDEM Residential Direct Exposure Criteria[6]	COPC Flag	Rationale for Contaminant Deletion or Selection[7]
Volatile Organic Compounds													
71-55-6	1,1,1-Trichloroethane	0.45 J	1.5 J	ug/kg	B179-SB3-0709	4/18	2 - 3	1.5	NA	870,000 N	540,000	No	BSL
75-34-3	1,1-Dichloroethane	3.4 J	3.4 J	ug/kg	B179-SB3-0709	1/16	2 - 3	3.4	NA	3,300 C	920,000	No	BSL
95-63-6	1,2,4-Trimethylbenzene	1.1 J	4.2 J	ug/kg	B179-SB1-0507	2/18	2 - 3	4.2	NA	6,200 N	NA	No	BSL
78-93-3	2-Butanone	8.5 J	15 J	ug/kg	B185A1-SB4-0103	3/18	9.9 - 15	15	NA	2,800,000 N	10,000,000	No	BSL
67-64-1	Acetone	200	200	ug/kg	B185A1-SB4-0103	2/18	12 - 73	200	NA	6,100,000 N	7,800,000	No	BSL
75-15-0	Carbon Disulfide	3.3 J	5.6 J	ug/kg	B179-SB1-0507	3/18	2 - 3	5.6	NA	82,000 N	NA	No	BSL
156-59-2	cis-1,2-Dichloroethene	6.4	6.4	ug/kg	B185A1-SB2-0103	1/18	2 - 3	6.4	NA	78,000 N	630,000	No	BSL
100-41-4	Ethylbenzene	0.76 J	0.76 J	ug/kg	B179-SB1-0507	1/18	2 - 3	0.76	NA	5,400 C	71,000	No	BSL
98-82-8	Isopropylbenzene	1.6 J	4.5 J	ug/kg	B179-SB1-0507	2/18	2 - 3	4.5	NA	210,000 N	27,000	No	BSL
68411-44-9	N-Butylbenzene	1.4 J	3.3 J	ug/kg	B185A1-SB1-0708	2/18	2 - 3	3.3	NA	NA	NA	No	NTX
103-65-1	N-Propylbenzene	2.2 J	2.2 J	ug/kg	B179-SB1-0507, B185A1-SB1-0708	2/18	2 - 3	2.2	NA	340,000 N	NA	No	BSL
135-98-8	sec-Butylbenzene	1 J	13 J	ug/kg	B179-SB1-0507	3/18	2 - 3	13	NA	NA	NA	No	NTX
98-06-6	Tert-Butylbenzene	2.2 J	2.2 J	ug/kg	B179-SB1-0507	1/18	2 - 3	2.2	NA	NA	NA	No	NTX
127-18-4	Tetrachloroethene	7.4	7.4	ug/kg	B185A1-SB4-0507	1/18	2 - 3	7.4	NA	550 C	12,000	No	BSL
540-59-0	Total 1,2-Dichloroethene	15.7	15.7	ug/kg	B185A1-SB2-0103	1/18	2 - 3	15.7	NA	70,000 N	NA	No	BSL
156-60-5	trans-1,2-Dichloroethene	9.3	9.3	ug/kg	B185A1-SB2-0103	1/18	2 - 3	9.3	NA	15,000 N	1,100,000	No	BSL
79-01-6	Trichloroethene	0.75 J	7.3	ug/kg	B185A1-SB2-0103	5/18	2 - 3	7.3	NA	2,800 C	13,000	No	BSL
75-01-4	Vinyl Chloride	2.8 J	2.8 J	ug/kg	B185A1-SB2-0103	1/18	4 - 6	2.8	NA	60 C	20	No	BSL
Semivolatile Organic Compounds													
91-57-6	2-Methylnaphthalene	2.5 J	6.3 J	ug/kg	B185A1-SB2-0103	4/15	11 - 13	6.3	NA	31,000 N	123,000	No	BSL
88-74-4	2-Nitroaniline	120 J	120 J	ug/kg	B185A1-SB2-0103	1/15	640 - 790	120	NA	61,000 N	NA	No	BSL
83-32-9	Acenaphthene	2.2 J	30 J	ug/kg	B185A1-SB4-0103	10/15	11 - 12	30	NA	340,000 N	43,000	No	BSL
208-96-8	Acenaphthylene	1.8 J	2.8 J	ug/kg	B185A1-SB4-0103	4/15	10 - 12	2.8	NA	340,000 N[8]	23,000	No	BSL
120-12-7	Anthracene	2.4 J	39 J	ug/kg	B185A1-SB4-0103	11/15	11 - 12	39	NA	1,700,000 N	35,000	No	BSL
56-55-3	**Benzo(a)anthracene**	5.2 J	160 J	ug/kg	B185A1-SB4-0103	13/15	11	160	NA	**150 C**	900	**Yes**	ASL
50-32-8	**Benzo(a)pyrene**	4.9 J	140 J	ug/kg	B185A1-SB4-0103	13/15	11	140	NA	**15 C**	400	**Yes**	ASL
205-99-2	**Benzo(b)fluoranthene**	17 J	220 J	ug/kg	B185A1-SB4-0103	11/15	9 - 11	220	NA	**150 C**	900	**Yes**	ASL
191-24-2	Benzo(g,h,i)perylene	3.2 J	92 J	ug/kg	B185A1-SB4-0103	13/15	11	92	NA	170,000 N[9]	800	No	BSL
207-08-9	Benzo(k)fluoranthene	3.4 J	65 J	ug/kg	B185A1-SB4-0103	13/15	11	65	NA	1,500 C	900	No	BSL
117-81-7	Bis(2-ethylhexyl)phthalate	230 J	230 J	ug/kg	B179-SB2-0709	1/13	260 - 320	230	NA	35,000 C	46,000	No	BSL
218-01-9	Chrysene	6.6 J	180 J	ug/kg	B185A1-SB4-0103	13/15	11	180	NA	15,000 C	400	No	BSL
53-70-3	**Dibenzo(a,h)anthracene**	2.3 J	23 J	ug/kg	B185A1-SB4-0103	8/15	10 - 12	23	NA	**15 C**	400	**Yes**	ASL
206-44-0	Fluoranthene	3.7 J	400	ug/kg	B185A1-SB4-0103	14/15	11	400	NA	230,000 N	20,000	No	BSL
86-73-7	Fluorene	4.7 J	44 J	ug/kg	B185A1-SB4-0103	8/15	11 - 12	44	NA	230,000 N	28,000	No	BSL
193-39-5	Indeno(1,2,3-cd)pyrene	4.7 J	130 J	ug/kg	B185A1-SB4-0103	13/15	11	130	NA	150 C	900	No	BSL
91-20-3	Naphthalene	4.3 J	6.4 J	ug/kg	B185A1-SB2-0103	2/15	10 - 13	6.4	NA	3,600 C	54,000	No	BSL
85-01-8	Phenanthrene	2.7 J	510	ug/kg	B185A1-SB4-0103	13/15	11 - 12	510	NA	170,000 N[9]	40,000	No	BSL
129-00-0	Pyrene	5.1 J	380	ug/kg	B185A1-SB4-0103	14/15	11	380	NA	170,000 N	13,000	No	BSL
50-32-8	**Benzo(a)pyrene Equivalents**	11.9	215	ug/kg	B185A1-SB4-0103	13/15	11	215	NA	**15 C**	NA	**Yes**	ASL

TABLE 4-4
OCCURRENCE, DISTRIBUTION, AND SELECTION OF CHEMICALS OF POTENTIAL CONCERN - DIRECT CONTACT WITH SUBSURFACE SOIl
SITE 08, NUSC DISPOSAL AREA
SUPPLEMENTAL REMEDIAL INVESTIGATION REPORT
NAVAL STATION NEWPORT, RHODE ISLAND

CAS Number	Chemical	Minimum Concentration[1]	Maximum Concentration[1]	Units	Sample of Maximum Concentration	Frequency of Detection	Range of Nondetects[2]	Concentration Used for Screening[3]	Range of Background Concentrations[4]	EPA RSL Residential Soil[5]	RIDEM Residential Direct Exposure Criteria[6]	COPC Flag	Rationale for Contaminant Deletion or Selection[7]
Pesticides/PCBs													
72-54-8	4,4'-DDD	0.81 J	3.2 J	ug/kg	B179-SB1-0507	3/15	1.7 - 2	3.2	NA	2,000 C	NA	No	BSL
72-55-9	4,4'-DDE	0.37 J	1.5 J	ug/kg	B179-SB1-0507	4/15	1.7 - 2	1.5	NA	1,400 C	NA	No	BSL
50-29-3	4,4'-DDT	0.68 J	0.9 J	ug/kg	B185A1-SB3-0103	2/15	1.7 - 2	0.9	NA	1,700 C	NA	No	BSL
319-86-8	delta-BHC	0.72 J	0.84 J	ug/kg	B185A1-SB4-0103	2/15	0.9 - 1.04	0.84	NA	77 C[10]	NA	No	BSL
60-57-1	Dieldrin	0.52 J	0.52 J	ug/kg	B179-SB1-0507	1/15	1.7 - 2	0.52	NA	30 C	40	No	BSL
959-98-8	Endosulfan I	1 J	1 J	ug/kg	B185A1-SB4-0507	1/15	0.9 - 1.04	1	NA	37,000 N[11]	NA	No	BSL
33213-65-9	Endosulfan II	0.84 J	0.84 J	ug/kg	B179-SB1-0507	1/15	1.7 - 2	0.84	NA	37,000 N[11]	NA	No	BSL
53494-70-5	Endrin Ketone	0.56 J	1.8 J	ug/kg	B185A1-SB3-0305	2/15	1.7 - 2	1.8	NA	1,800 N[12]	NA	No	BSL
5103-74-2	gamma-Chlordane	0.35 J	0.35 J	ug/kg	B185A1-SB1-0708	1/15	0.9 - 1.04	0.35	NA	1,600 C[13]	0.5 [13]	No	BSL
76-44-8	Heptachlor	0.49 J	0.49 J	ug/kg	B185A1-SB1-0708	1/15	0.9 - 1.04	0.49	NA	110 C	NA	No	BSL
118-74-1	Hexachlorobenzene	1.5 J	1.5 J	ug/kg	B185A1-SB4-0507	1/13	1.7 - 2	1.5	NA	300 C	400	No	BSL
Energetics													
6423-43-4	1,2-Propylene Glycol Dinitrate	260	420	ug/kg	B185A1-SB2-0103	2/13	100	420	NA	5,700 N	NA	No	BSL
Metals													
7429-90-5	**Aluminum**	8,230 J	21,000	mg/kg	B185A1-SB1-0708	15/15	- - -	21,000	5,520 - 15,000	**7,700 N**	NA	**Yes**	ASL
7440-38-2	**Arsenic**	2.8 J	27.3	mg/kg	B185A1-SB3-0103	15/15	- - -	27.3	1.9 - 49.4	**0.39 C**	**7**	**Yes**	ASL
7440-39-3	Barium	12.5 J	43.1	mg/kg	B185A1-SB4-0507	15/15	- - -	43.1	13.6 - 45.5	1,500 N	5,500	No	BSL
7440-41-7	**Beryllium**	0.3 J	0.6 J	mg/kg	B185A1-SB4-0507	15/15	- - -	0.6	0.28 - 0.78	16 N	**0.4**	**Yes**	ASL
7440-70-2	Calcium	630 J	2,120	mg/kg	B185A1-SB1-0708	15/15	- - -	2,120	314 - 1,870	NA	NA	No	NUT
7440-47-3	Chromium	7.9	23.5	mg/kg	B185A1-SB1-0708	15/15	- - -	23.5	6.2 - 21.3	120,000 N[14]	1,400 [14]	No	BSL
7440-48-4	**Cobalt**	4.2	23.8	mg/kg	B185A1-SB1-0708	15/15	- - -	23.8	4.6 - 19.9	**2.3 N**	NA	**Yes**	ASL
7440-50-8	Copper	3.4	26.5	mg/kg	B179-SB3-0709	15/15	- - -	26.5	6.1 - 43.7	310 N	3,100	No	BSL
7439-89-6	**Iron**	13,300	40,700	mg/kg	B185A1-SB1-0708	15/15	- - -	40,700	10,600 - 57,100	**5,500 N**	NA	**Yes**	ASL
7439-92-1	Lead	7	16.7	mg/kg	B185A1-SB1-0708	15/15	- - -	16.7	5.2 - 15.4	400	150	No	BSL
7439-95-4	Magnesium	1,660 J	7,750	mg/kg	B185A1-SB1-0708	15/15	- - -	7,750	1,880 - 4,580	NA	NA	No	NUT
7439-96-5	**Manganese**	154	1,100	mg/kg	B185A1-SB4-0507	15/15	- - -	1,100	157 - 1,750	**180 N**	**390**	**Yes**	ASL
7439-97-6	Mercury	0.008 J	0.03 J	mg/kg	B185A3-SB1-0103	9/15	0.017 - 0.021	0.03	0.013 - 0.023	2.3 N[15]	23	No	BSL
7439-98-7	Molybdenum	0.23 J	1.5 J	mg/kg	B179-SB2-0709	3/15	0.22 - 1.7	1.5	NA	39 N	NA	No	BSL
7440-02-0	Nickel	8	38.2	mg/kg	B185A1-SB1-0708	15/15	- - -	38.2	7.6 - 37.1	150 N	1,000	No	BSL
7440-09-7	Potassium	292 J	1,200 J	mg/kg	B179-SB2-0709	15/15	- - -	1,200	288 - 2,440	NA	NA	No	NUT
7782-49-2	Selenium	0.35 J	1.9 J	mg/kg	B179-SB3-0709	12/15	0.67 - 1.5	1.9	0.2225 - 0.71	39 N	390	No	BSL
7440-22-4	Silver	0.08 J	0.69 J	mg/kg	B185A1-SB4-0507	12/15	0.31 - 0.83	0.69	NA	39 N	200	No	BSL
7440-23-5	Sodium	42.5 J	172	mg/kg	B179-SB1-0507	11/15	39.1 - 52	172	54.1 - 107	NA	NA	No	NUT
7440-28-0	Thallium	0.01 J	0.1 J	mg/kg	B185A1-SB4-0507	15/15	- - -	0.1	NA	NA	5.5	No	BSL
7440-62-2	Vanadium	12.5	23.4	mg/kg	B185A1-SB4-0103	15/15	- - -	23.4	8.6 - 28.5	39 N	550	No	BSL
7440-66-6	Zinc	27.9	81.9	mg/kg	B185A1-SB1-0708	15/15	- - -	81.9	18.7 - 76.2	2,300 N	6,000	No	BSL

TABLE 4-4
OCCURRENCE, DISTRIBUTION, AND SELECTION OF CHEMICALS OF POTENTIAL CONCERN - DIRECT CONTACT WITH SUBSURFACE SOIl
SITE 08, NUSC DISPOSAL AREA
SUPPLEMENTAL REMEDIAL INVESTIGATION REPORT
NAVAL STATION NEWPORT, RHODE ISLAND

CAS Number	Chemical	Minimum Concentration[1]	Maximum Concentration[1]	Units	Sample of Maximum Concentration	Frequency of Detection	Range of Nondetects[2]	Concentration Used for Screening[3]	Range of Background Concentrations[4]	EPA RSL Residential Soil[5]	RIDEM Residential Direct Exposure Criteria[6]	COPC Flag	Rationale for Contaminant Deletion or Selection[7]

Footnotes:
1 - Sample and duplicate are considered as two separate samples when determining the minimum and maximum concentrations.
2 - Values presented are sample-specific quantitation limits.
3 - The maximum detected concentration is used for screening purposes.
4 - Background Study Report for Naval Station Newport (Tetra Tech, 2008)
5 - EPA Regional Screening Levels for Chemical Contaminants at Superfund Sites, May 2010. The noncarcinogenic values (denoted with a "N" flag) are the screening level divided by 10 to correspond to a target hazard quotient of 0.1. Carcinogenic values represent an incremental cancer risk of 1.0E-06 (carcinogens denoted with a "C" flag).
6 - Rhode Island Department of Environmental Management (RIDEM), DEM-DSR-01-93, February 2004.
7 - The chemical is selected as a COPC if the maximum detected concentration exceeds the risk-based COPC screening level.
8 - Value is for acenaphthene.
9 - Value is for pyrene.
10 - Value is for alpha-BHC.
11 - Value is for Endosulfan.
12 - Value is for Endrin.
13 - Value is for chlordane.
14 - Value is for trivalent chromium.
15 - Value is for mercury, inorganic salts.
Shaded criterion indicates that the maximum detected concentration exceeds one or more screening criteria. Shaded chemical name indicates that the chemical was retained as a COPC.

Associated Samples
B179-SB1-0507
B179-SB2-0709
B179-SB3-0709
B185A1-SB1-0103
B185A1-SB1-0708
B185A1-SB2-0103
B185A1-SB2-0305
B185A1-SB3-0103
B185A1-SB3-0305
B185A1-SB4-0103
B185A1-SB4-0507
B185A3-SB1-0103
B185A3-SB1-0305
127B-S-3-070910-4-6
128B-071210-2-4
128B-071210-4-6
B179-SB2-0204-AVG
B179-SB3-0406

Definitions:
C = Carcinogen
CAS = Chemical Abstracts Service
COPC = Chemical Of Potential Concern
J = Estimated value
N = Noncarcinogen
NA = Not Applicable/Not Available

Rationale Codes:
For selection as a COPC:
ASL = Above Screening Level.

For elimination as a COPC:
BSL = Below COPC Screening Level
NUT = Essential nutrient
NTX = No toxicity criteria

TABLE 4-5
OCCURRENCE, DISTRIBUTION, AND SELECTION OF CHEMICALS OF POTENTIAL CONCERN - DIRECT CONTACT WITH GROUNDWATER (OVERBURDEN-BEDROCK INTERFACE)
SITE 08, NUSC DISPOSAL AREA
SUPPLEMENTAL REMEDIAL INVESTIGATION REPORT
NAVAL STATION NEWPORT, RHODE ISLAND

CAS Number	Chemical	Minimum Concentration[1]	Maximum Concentration[1]	Units	Sample of Maximum Concentration	Frequency of Detection	Range of Nondetects[2]	Concentration Used for Screening[3]	Range of Background Concentrations[4]	EPA RSL Tap Water[5]	Potential ARAR/TBC	Potential ARAR/TBC Source	COPC Flag	Rationale for Contaminant Deletion or Selection[6]
Volatile Organic Compounds														
71-55-6	**1,1,1-Trichloroethane**	440	440	ug/L	DA-MW7A-062310	1/7	0.5 - 0.5	440	NA	910 N	**200** 200	**EPA-MCL** RIDEM	**Yes**	ASL
75-34-3	**1,1-Dichloroethane**	0.84 J	1,000	ug/L	DA-MW7A-062310	2/7	0.5 - 0.5	1,000	NA	**2.4 C**	NA NA	NA NA	**Yes**	ASL
75-35-4	**1,1-Dichloroethene**	11 J	11 J	ug/L	DA-MW7A-062310	1/7	0.5 - 0.5	11	NA	34 N	**7** 7	**EPA-MCL** RIDEM	**Yes**	ASL
95-63-6	1,2,4-Trimethylbenzene	0.51 J	0.51 J	ug/L	DA-MW7A-062310	1/7	0.5 - 0.5	0.51	NA	1.5 N	NA NA	NA NA	No	BSL
67-64-1	Acetone	9.6	11	ug/L	DA-MW6A-062310	2/7	2.5 - 2.5	11	NA	2,200 N	NA NA	NA NA	No	BSL
75-00-3	Chloroethane	1,000	1,000	ug/L	DA-MW7A-062310	1/7	1 - 1	1,000	NA	2,100 N	NA NA	NA NA	No	BSL
74-87-3	Chloromethane	0.37 J	0.37 J	ug/L	DA-MW-08A-062910	1/7	1 - 1	0.37	NA	19 N	NA NA	NA NA	No	BSL
156-59-2	cis-1,2-Dichloroethene	0.23 J	2.2	ug/L	DA-MW7A-062310	3/7	0.5 - 0.5	2.2	NA	37 N	70 70	EPA-MCL RIDEM	No	BSL
98-82-8	Isopropylbenzene	1.3	1.3	ug/L	DA-MW7A-062310	1/7	0.5 - 0.5	1.3	NA	68 N	NA NA	NA NA	No	BSL
95-47-6	o-Xylene	0.34 J	0.34 J	ug/L	DA-MW7A-062310	1/7	0.5 - 0.5	0.34	NA	120 N	NA NA	NA NA	No	BSL
135-98-8	sec-Butylbenzene	0.89 J	0.89 J	ug/L	DA-MW7A-062310	1/7	0.5 - 0.5	0.89	NA	NA	NA NA	NA NA	No	NTX
98-06-6	tert-Butylbenzene	0.34 J	0.34 J	ug/L	DA-MW7A-062310	1/7	0.5 - 0.5	0.34	NA	NA	NA NA	NA NA	No	NTX
127-18-4	**Tetrachloroethene**	0.58 J	8.3	ug/L	DA-MW7A-062310	3/7	0.5 - 0.5	8.3	NA	**0.11 C**	**5** 5	**EPA-MCL** RIDEM	**Yes**	ASL
540-59-0	Total 1,2-Dichloroethene	0.23 J	2.2	ug/L	DA-MW7A-062310	3/7	0.5 - 0.5	2.2	NA	33 N	NA NA	NA NA	No	BSL
1330-20-7	Total Xylenes	0.34 J	0.34 J	ug/L	DA-MW7A-062310	1/7	0.75 - 0.75	0.34	NA	20 N	10,000 10,000	EPA-MCL RIDEM	No	BSL
79-01-6	**Trichloroethene**	0.57 J	3.9	ug/L	DA-MW7A-062310	3/7	0.5 - 0.5	3.9	NA	**2 C**	5 5	EPA-MCL RIDEM	**Yes**	ASL
Volatile Gases														
74-84-0	Ethane	0.88 J	0.88 J	ug/L	GW-B185A3-SB1	1/4	2 - 2	0.88	NA	NA	NA	NA	No	NTX
74-85-1	Ethene	0.76 J	0.76 J	ug/L	GW-B185A3-SB1	1/4	2 - 2	0.76	NA	NA	NA	NA	No	NTX
74-82-8	Methane	3.2 J	160 J	ug/L	DA-MW7A-062310	4/4	-	160	NA	NA	NA	NA	No	NTX
Energetics														
6423-43-4	**1,2-Propylene Glycol Dinitrate**	0.11 J	0.11 J	ug/L	GW-B185A3-SB1	1/5	0.1 - 0.1	0.11	NA	**0.057 N**	NA	NA	**Yes**	ASL
Miscellaneous Parameters														
7664-41-7	Ammonia-N	0.039 J	2.4	mg/L	DA-MW7A-062310	3/4	0.05 - 0.05	2.4	NA	NA	NA	NA	No	NTX
14797-55-8	Nitrate-N	0.0192 J	3.4	mg/L	DA-MW-12-063010	3/4	0.025 - 0.025	3.4	NA	5.8 N	10	EPA-MCL	No	BSL
14797-65-0	Nitrite-N	0.14	0.14	mg/L	GW-B185A3-SB1	1/4	0.025 - 0.025	0.14	NA	0.37 N	1	EPA-MCL	No	BSL
--	Orthophosphate-P	0.068 J	0.068 J	mg/L	GW-B185A3-SB1	1/4	0.05 - 0.05	0.068	NA	NA	NA	NA	No	NTX

TABLE 4-5
OCCURRENCE, DISTRIBUTION, AND SELECTION OF CHEMICALS OF POTENTIAL CONCERN - DIRECT CONTACT WITH GROUNDWATER (OVERBURDEN-BEDROCK INTERFACE)
SITE 08, NUSC DISPOSAL AREA
SUPPLEMENTAL REMEDIAL INVESTIGATION REPORT
NAVAL STATION NEWPORT, RHODE ISLAND

CAS Number	Chemical	Minimum Concentration[1]	Maximum Concentration[1]	Units	Sample of Maximum Concentration	Frequency of Detection	Range of Nondetects[2]	Concentration Used for Screening[3]	Range of Background Concentrations[4]	EPA RSL Tap Water[5]	Potential ARAR/TBC	Potential ARAR/TBC Source	COPC Flag	Rationale for Contaminant Deletion or Selection[6]
14808-79-8	Sulfate	9	23	mg/L	DA-MW-12-063010	4/4	-	23	NA	NA	NA	NA	No	NTX
18496-25-8	Sulfide	0.73 J	1	mg/L	DA-MW7A-062310	2/4	0.8 - 0.8	1	NA	NA	NA	NA	No	NTX
--	Total Organic Carbon	1	10	mg/L	DA-MW7A-062310	4/4	-	10	NA	NA	NA	NA	No	NTX

Footnotes:
1 - Sample and duplicate are considered as two separate samples when determining the minimum and maximum concentrations.
2 - Values presented are sample-specific quantitation limits.
3 - The maximum detected concentration is used for screening purposes.
4 - Background samples were not collected for the SRI.
5 - EPA Regional Screening Level (RSL). The noncarcinogenic values (denoted with a "N" flag) are the screening level divided by 10 to correspond to a target hazard quotient of 0.1. Carcinogenic values represent an incremental cancer risk of 1.0E-06 (carcinogens denoted with a "C" flag) and were not adjusted, May 2010.
6 - The chemical is selected as a COPC if the maximum detected concentration exceeds the risk-based COPC screening level.
Shaded criterion indicates that the maximum detected concentration exceeds one or more screening criteria. Shaded chemical name indicates that the chemical was retained as a COPC.

Associated Samples
GW-B185A3-SB1
DA-DW-15-0610
DA-DW-16-0610
DA-MW6A-062310
DA-MW7A-062310
DA-MW-08A-062910
DA-MW-11-062910-AVG
DA-MW-12-063010
DA-MW-122-063010

Definitions:
ARAR/TBC = Applicable or Relevant and Appropriate Requirements To Be Considered
C = Carcinogen
CAS = Chemical Abstracts Service
COPC = Chemical Of Potential Concern
EPA-MCL = US Environmental Protection Agency Maximum Contaminant Level (EPA, 2009)
J = Estimated value
N = Noncarcinogen
NA = Not Applicable/Not Available

Rationale Codes:
For selection as a COPC:
ASL = Above Screening Level/ARAR/TBC

For elimination as a COPC:
BSL = Below COPC Screening Level
NUT = Essential nutrient
NTX = No toxicity criteria

TABLE 4-6
OCCURRENCE, DISTRIBUTION, AND SELECTION OF CHEMICALS OF POTENTIAL CONCERN - VAPOR INTRUSION (OVERBURDEN-BEDROCK INTERFACE)
SITE 08, NUSC DISPOSAL AREA
SUPPLEMENTAL REMEDIAL INVESTIGATION REPORT
NAVAL STATION NEWPORT, RHODE ISLAND

CAS Number	Chemical	Minimum Concentration[1]	Maximum Concentration[1]	Units	Sample of Maximum Concentration	Frequency of Detection	Range of Nondetects[2]	Concentration Used for Screening[3]	Range of Background Concentrations[4]	Vapor Intrusion Criteria[5,7]	Potential ARAR/TBC	Potential ARAR/TBC Source	COPC Flag	Rationale for Contaminant Deletion or Selection[6]
Volatile Organic Compounds														
71-55-6	**1,1,1-Trichloroethane**	440	440	ug/L	DA-MW7A-062310	1/7	0.5 - 0.5	440	NA	**310 N**	NA	NA	**Yes**	ASL
75-34-3	**1,1-Dichloroethane**	0.84 J	1,000	ug/L	DA-MW7A-062310	2/7	0.5 - 0.5	1,000	NA	**220 N**	NA	NA	**Yes**	ASL
75-35-4	1,1-Dichloroethene	11 J	11 J	ug/L	DA-MW7A-062310	1/7	0.5 - 0.5	11	NA	19 N	NA	NA	No	BSL
95-63-6	1,2,4-Trimethylbenzene	0.51 J	0.51 J	ug/L	DA-MW7A-062310	1/7	0.5 - 0.5	0.51	NA	2.4 N	NA	NA	No	BSL
67-64-1	Acetone	9.6	11	ug/L	DA-MW6A-062310	2/7	2.5 - 2.5	11	NA	22,000 N	NA	NA	No	BSL
75-00-3	Chloroethane	1,000	1,000	ug/L	DA-MW7A-062310	1/7	1 - 1	1,000	NA	2,800 N	NA	NA	No	BSL
74-87-3	Chloromethane	0.37 J	0.37 J	ug/L	DA-MW-08A-062910	1/7	1 - 1	0.37	NA	6.7 C	NA	NA	No	BSL
156-59-2	cis-1,2-Dichloroethene	0.23 J	2.2	ug/L	DA-MW7A-062310	3/7	0.5 - 0.5	2.2	NA	21 N	NA	NA	No	BSL
98-82-8	**Isopropylbenzene**	1.3	1.3	ug/L	DA-MW7A-062310	1/7	0.5 - 0.5	1.3	NA	**0.84 N**	NA	NA	**Yes**	ASL
95-47-6	o-Xylene	0.34 J	0.34 J	ug/L	DA-MW7A-062310	1/7	0.5 - 0.5	0.34	NA	3,300 N	NA	NA	No	BSL
135-98-8	sec-Butylbenzene	0.89 J	0.89 J	ug/L	DA-MW7A-062310	1/7	0.5 - 0.5	0.89	NA	25 N	NA	NA	No	BSL
98-06-6	tert-Butylbenzene	0.34 J	0.34 J	ug/L	DA-MW7A-062310	1/7	0.5 - 0.5	0.34	NA	29 N	NA	NA	No	BSL
127-18-4	**Tetrachloroethene**	0.58 J	8.3	ug/L	DA-MW7A-062310	3/7	0.5 - 0.5	8.3	NA	**0.55 C[7]**	NA	NA	**Yes**	ASL
540-59-0	Total 1,2-Dichloroethene	0.23 J	2.2	ug/L	DA-MW7A-062310	3/7	0.5 - 0.5	2.2	NA	NA	NA	NA	No	NTX
1330-20-7	Total Xylenes	0.34 J	0.34 J	ug/L	DA-MW7A-062310	1/7	0.75 - 0.75	0.34	NA	2,200 N[8]	NA	NA	No	BSL
79-01-6	**Trichloroethene**	0.57 J	3.9	ug/L	DA-MW7A-062310	3/7	0.5 - 0.5	3.9	NA	**2.9 C[7]**	NA	NA	**Yes**	ASL
Volatile Gases														
74-84-0	Ethane	0.88 J	0.88 J	ug/L	GW-B185A3-SB1	1/4	2 - 2	0.88	NA	NA	NA	NA	No	NTX
74-85-1	Ethene	0.76 J	0.76 J	ug/L	GW-B185A3-SB1	1/4	2 - 2	0.76	NA	NA	NA	NA	No	NTX
74-82-8	Methane	3.2 J	160 J	ug/L	DA-MW7A-062310	4/4	-	160	NA	NA	NA	NA	No	NTX
Energetics														
6423-43-4	1,2-Propylene Glycol Dinitrate	0.11 J	0.11 J	ug/L	GW-B185A3-SB1	1/5	0.1 - 0.1	0.11	NA	NA	NA	NA	No	NTX
Miscellaneous Parameters														
7664-41-7	Ammonia-N	0.039 J	2.4	mg/L	DA-MW7A-062310	3/4	0.05 - 0.05	2.4	NA	NA	NA	NA	No	NTX
14797-55-8	Nitrate-N	0.0192 J	3.4	mg/L	DA-MW-12-063010	3/4	0.025 - 0.025	3.4	NA	NA	NA	NA	No	NTX
14797-65-0	Nitrite-N	0.14	0.14	mg/L	GW-B185A3-SB1	1/4	0.025 - 0.025	0.14	NA	NA	NA	NA	No	NTX
--	Orthophosphate-P	0.068 J	0.068 J	mg/L	GW-B185A3-SB1	1/4	0.05 - 0.05	0.068	NA	NA	NA	NA	No	NTX
14808-79-8	Sulfate	9	23	mg/L	DA-MW-12-063010	4/4	-	23	NA	NA	NA	NA	No	NTX
18496-25-8	Sulfide	0.73 J	1	mg/L	DA-MW7A-062310	2/4	0.8 - 0.8	1	NA	NA	NA	NA	No	NTX
TTNUS003	Total Organic Carbon	1	10	mg/L	DA-MW7A-062310	4/4	-	10	NA	NA	NA	NA	No	NTX

Footnotes:
1 - Sample and duplicate are considered as two separate samples when determining the minimum and maximum concentrations.
2 - Values presented are sample-specific quantitation limits.
3 - The maximum detected concentration is used for screening purposes.
4 - Background samples were not collected for the supplemental investigation.
5 - Draft Guidance for Evaluating the Vapor Intrusion to Indoor Air Pathway from Groundwater and Soils. November 2002. EPA530-F-02-052. Values are from Table 2c of that guidance.
6 - The chemical is selected as a COPC if the maximum detected concentration exceeds the risk-based COPC screening level.
7 - The value presented in Table 2c of the draft vapor intrusion guidance is based on the MCL. EPA Region I requires the screening criteria for vapor intrusion to be risk-based. Therefore, the values for carcinogenic compounds (denoted with a "C" flag) from Table 2a are adjusted for a 1E-6 cancer risk level.The noncarcinogenic values (denoted with a "N" flag) are the screening level divided by 10 to correspond to a target hazard quotient of 0.1.
8 - Value is for p-xylenes.
Shaded criterion indicates that the maximum detected concentration exceeds one or more screening criteria. Shaded chemical name indicates that the chemical was retained as a COPC.

Associated Samples

GW-B185A3-SB1	DA-MW6A-062310	DA-MW-11-062910-AVG
DA-DW-15-0610	DA-MW7A-062310	DA-MW-12-063010
DA-DW-16-0610	DA-MW-08A-062910	DA-MW-122-063010

Definitions:
ARAR/TBC = Applicable or Relevant and Appropriate Requirements To Be Considered
C = Carcinogen
CAS = Chemical Abstracts Service
COPC = Chemical Of Potential Concern
J = Estimated value
NA = Not Applicable/Not Available

Rationale Codes:
For selection as a COPC:
ASL = Above Screening Level.

For elimination as a COPC:
BSL = Below COPC Screening Level
NUT = Essential nutrient
NTX = No toxicity criteria

TABLE 4-7
OCCURRENCE, DISTRIBUTION, AND SELECTION OF CHEMICALS OF POTENTIAL CONCERN - DIRECT CONTACT WITH GROUNDWATER (BEDROCK)
SITE 08, NUSC DISPOSAL AREA
SUPPLEMENTAL REMEDIAL INVESTIGATION REPORT
NAVAL STATION NEWPORT, RHODE ISLAND

CAS Number	Chemical	Minimum Concentration[1]	Maximum Concentration[1]	Units	Sample of Maximum Concentration	Frequency of Detection	Range of Nondetects[2]	Concentration Used for Screening[3]	Range of Background Concentrations[4]	EPA RSL Tap Water[5]	Potential ARAR/TBC	Potential ARAR/TBC Source	COPC Flag	Rationale for Contaminant Deletion or Selection[7]
Volatile Organic Compounds														
71-55-6	**1,1,1-Trichloroethane**	0.29 J	290	ug/L	DA-MW7B-062210	11/21	0.5 - 0.5	290	NA	910 N	**200** 200	**EPA-MCL** RIDEM	**Yes**	ASL
79-00-5	**1,1,2-Trichloroethane**	0.48 J	0.48 J	ug/L	DA-GW-MW128B-080910	1/21	0.5 - 0.5	0.48	NA	**0.24 C**	5 5	EPA-MCL RIDEM	**Yes**	ASL
75-34-3	**1,1-Dichloroethane**	0.28 J	510	ug/L	DA-MW101B-062310	13/21	0.5 - 0.5	510	NA	**2.4 C**	NA NA	NA NA	**Yes**	ASL
75-35-4	**1,1-Dichloroethene**	0.45 J	52 J	ug/L	DA-MW101B-062310	14/21	0.5 - 0.5	52	NA	**34 N**	**7** 7	**EPA-MCL** RIDEM	**Yes**	ASL
95-63-6	**1,2,4-Trimethylbenzene**	3.6	3.6	ug/L	DA-MW7B-062210	1/21	0.5 - 0.5	3.6	NA	**1.5 N**	NA NA	NA NA	**Yes**	ASL
108-67-8	1,3,5-Trimethylbenzene	0.66 J	0.66 J	ug/L	DA-MW7B-062210	1/21	0.5 - 0.5	0.66	NA	37 N	NA NA	NA NA	No	BSL
67-64-1	Acetone	3.6 J	5.2	ug/L	DA-MW7B-062210	2/21	2.5 - 27	5.2	NA	2,200 N	NA NA	NA NA	No	BSL
56-23-5	**Carbon Tetrachloride**	1.85	1.85	ug/L	DA-MW-03B-062810-AVG	1/21	0.5 - 0.5	1.85	NA	**0.44 C**	5 5	EPA-MCL RIDEM	**Yes**	ASL
75-00-3	Chloroethane	1.9 J	94	ug/L	DA-MW101B-062310	4/21	1 - 1	94	NA	2,100 N	NA NA	NA NA	No	BSL
156-59-2	cis-1,2-Dichloroethene	0.37 J	26	ug/L	DA-GW-MW128B-080910	14/21	0.5 - 0.5	26	NA	37 N	70 70	EPA-MCL RIDEM	No	BSL
100-41-4	Ethylbenzene	0.76 J	0.76 J	ug/L	DA-MW7B-062210	1/21	0.5 - 0.5	0.76	NA	1.5 C	700 700	EPA-MCL RIDEM	No	BSL
98-82-8	Isopropylbenzene	0.51 J	0.51 J	ug/L	DA-MW7B-062210	1/21	0.5 - 0.5	0.51	NA	68 N	NA NA	NA NA	No	BSL
104-51-8	N-Butylbenzene	0.39 J	0.39 J	ug/L	DA-MW7B-062210	1/21	0.5 - 0.5	0.39	NA	NA	NA NA	NA NA	No	NTX
103-65-1	N-Propylbenzene	0.9 J	0.9 J	ug/L	DA-MW7B-062210	1/21	0.5 - 0.5	0.9	NA	130 N	NA NA	NA NA	No	BSL
95-47-6	o-Xylene	0.79 J	0.79 J	ug/L	DA-MW7B-062210	1/21	0.5 - 0.5	0.79	NA	120 N	NA NA	NA NA	No	BSL
135-98-8	sec-Butylbenzene	0.48 J	0.48 J	ug/L	DA-MW7B-062210	1/21	0.5 - 0.5	0.48	NA	NA	NA NA	NA NA	No	NTX
127-18-4	**Tetrachloroethene**	0.53 J	2.7	ug/L	DA-MW104B-061810	5/21	0.5 - 0.5	2.7	NA	**0.11 C**	5 5	EPA-MCL RIDEM	**Yes**	ASL
108-88-3	Toluene	0.68 J	0.68 J	ug/L	DA-MW7B-062210	1/21	0.5 - 0.5	0.68	NA	230 N	1,000 1,000	EPA-MCL RIDEM	No	BSL
540-59-0	Total 1,2-Dichloroethene	0.37 J	29.7	ug/L	DA-GW-MW128B-080910	14/21	0.5 - 0.5	29.7	NA	33 N	NA NA	NA NA	No	BSL
1330-20-7	Total Xylenes	0.79 J	0.79 J	ug/L	DA-MW7B-062210	1/21	0.75 - 0.75	0.79	NA	20 N	10,000 10,000	EPA-MCL RIDEM	No	BSL
156-60-5	trans-1,2-Dichloroethene	0.36 J	3.7	ug/L	DA-GW-MW128B-080910	2/21	0.5 - 0.5	3.7	NA	11 N	100 100	EPA-MCL RIDEM	No	BSL
79-01-6	**Trichloroethene**	0.37 J	1,200	ug/L	DA-GW-MW128B-080910	16/21	0.5 - 0.5	1,200	NA	**2 C**	**5** 5	**EPA-MCL** RIDEM	**Yes**	ASL

TABLE 4-7
OCCURRENCE, DISTRIBUTION, AND SELECTION OF CHEMICALS OF POTENTIAL CONCERN - DIRECT CONTACT WITH GROUNDWATER (BEDROCK)
SITE 08, NUSC DISPOSAL AREA
SUPPLEMENTAL REMEDIAL INVESTIGATION REPORT
NAVAL STATION NEWPORT, RHODE ISLAND

CAS Number	Chemical	Minimum Concentration[1]	Maximum Concentration[1]	Units	Sample of Maximum Concentration	Frequency of Detection	Range of Nondetects[2]	Concentration Used for Screening[3]	Range of Background Concentrations[4]	EPA RSL Tap Water[5]	Potential ARAR/TBC	Potential ARAR/TBC Source	COPC Flag	Rationale for Contaminant Deletion or Selection[7]
Volatile Organic Compounds (Continued)														
75-01-4	**Vinyl Chloride**	0.31 J	3.7	ug/L	DA-MW-103B-070110	8/21	1 - 1	3.7	NA	**0.016 C**	**2** 2	**EPA-MCL** RIDEM	**Yes**	ASL
Volatile Gases														
74-84-0	Ethane	3.5 J	3.5 J	ug/L	DA-MW-09B-062910	1/11	2 - 2	3.5	NA	NA	NA NA	NA NA	No	NTX
74-82-8	Methane	1.4 J	6,000 J	ug/L	DA-MW-09B-062910	11/11	-	6,000	NA	NA	NA NA	NA NA	No	NTX
Semivolatile Organic Compounds														
123-91-1	**1,4-Dioxane**	0.054 J	8.3	ug/L	DA-MW-09B-062910	9/14	0.104 - 0.55	8.3	NA	**6.1 C**	NA NA	NA NA	**Yes**	ASL
Miscellaneous Parameters														
7664-41-7	Ammonia-N	0.17	4.9	mg/L	DA-MW-09B-062910	2/11	0.05 - 0.05	4.9	NA	NA	NA NA	NA NA	No	NTX
14797-55-8	Nitrate-N	0.018 J	0.695	mg/L	DA-MW-03B-062810-AVG	9/11	0.025 - 0.025	0.695	NA	5.8 N	10 NA	EPA-MCL NA	No	BSL
14808-79-8	Sulfate	1.1	39	mg/L	DA-MW-127B-081010	11/11	-	39	NA	NA	NA NA	NA NA	No	NTX
18496-25-8	Sulfide	0.7 J	2.2	mg/L	DA-MW101B-062310	3/11	0.8 - 0.8	2.2	NA	NA	NA NA	NA NA	No	NTX
--	Total Organic Carbon	0.57 J	2.8	mg/L	DA-MW-09B-062910	11/11	-	2.8	NA	NA	NA NA	NA NA	No	NTX
57-12-5	Cyanide	5.6 J	5.6 J	ug/L	DA-MW-09B-062910	1/5	5 - 5	5.6	NA	73 N	200 200	EPA-MCL RIDEM	No	BSL

Footnotes:
1 - Sample and duplicate are considered as two separate samples when determining the minimum and maximum concentrations.
2 - Values presented are sample-specific quantitation limits.
3 - The maximum detected concentration is used for screening purposes.
4 - To determine whether chemical concentrations were within background levels, a statistical analysis was conducted using the site and background datasets.
5 - USEPA Regional Screening Level (RSL). The noncarcinogenic values (denoted with a "N" flag) are the screening level divided by 10 to correspond to a target hazard quotient of 0.1. Carcinogenic values represent an incremental cancer risk of 1.0E-06 (carcinogens denoted with a "C" flag), May 2010.
6 - The chemical is selected as a COPC if the maximum detected concentration exceeds the risk-based COPC screening level.
Shaded criterion indicates that the maximum detected concentration exceeds one or more screening criteria. Shaded chemical name indicates that the chemical was retained as a COPC.

Associated Samples

DA-MW-03B-062810-AVG	DA-MW-103B-070110	DA-MW-118B-D1-081010	DA-MW101B-062310
DA-MW-04B-063010	DA-MW104B-061810	DA-MW-118B-D2-081010	DA-MW-117B-D2-081110
DA-MW6B-061710	DA-MW-105B-062810	DA-MW-127B-081010	DA-MW-13B-063010
DA-MW7B-062210	DA-GW-MW116B-D1-0810	DA-GW-MW128B-080910	
DA-MW8B-062210	DA-GW-MW116B-D2-0810	DA-MW-129B-081010-AVG	
DA-MW-09B-062910	DA-MW-117B-D1-081110	DA-GW-MW130B-080910	

Definitions:
ARAR/TBC = Applicable or Relevant and Appropriate Requirements To Be Considered
C = Carcinogen
CAS = Chemical Abstracts Service
COPC = Chemical Of Potential Concern
EPA-MCL = US Environmental Protection Agency Maximum Contaminant Level (USEPA, 2009)
J = Estimated value
N = Noncarcinogen
NA = Not Applicable/Not Available
RIDEM = Rhode Island Department of Environmental Management GA Groundwater Objective (February, 2004).

Rationale Codes:
For selection as a COPC:
ASL = Above Screening Level/ARAR/TBC

For elimination as a COPC:
BSL = Below COPC Screening Level
NUT = Essential nutrient
NTX = No toxicity criteria

TABLE 4-8
OCCURRENCE, DISTRIBUTION, AND SELECTION OF CHEMICALS OF POTENTIAL CONCERN - VAPOR INTRUSION (BEDROCK)
SITE 08, NUSC DISPOSAL AREA
SUPPLEMENTAL REMEDIAL INVESTIGATION REPORT
NAVAL STATION NEWPORT, RHODE ISLAND

CAS Number	Chemical	Minimum Concentration[1]	Maximum Concentration[1]	Units	Sample of Maximum Concentration	Frequency of Detection	Range of Nondetects[2]	Concentration Used for Screening[3]	Range of Background Concentrations[4]	Vapor Intrusion Criteria[5]	Potential ARAR/TBC	Potential ARAR/TBC Source	COPC Flag	Rationale for Contaminant Deletion or Selection[6]
Volatile Organic Compounds														
71-55-6	1,1,1-Trichloroethane	0.29 J	290	ug/L	DA-MW7B-062210	11/21	0.5 - 0.5	290	NA	310 N	NA	NA	No	BSL
79-00-5	1,1,2-Trichloroethane	0.48 J	0.48 J	ug/L	DA-GW-MW128B-080910	1/21	0.5 - 0.5	0.48	NA	4.1 C[7]	NA	NA	No	BSL
75-34-3	**1,1-Dichloroethane**	0.28 J	510	ug/L	DA-MW101B-062310	13/21	0.5 - 0.5	510	NA	**220 N**	NA	NA	**Yes**	ASL
75-35-4	**1,1-Dichloroethene**	0.45 J	52 J	ug/L	DA-MW101B-062310	14/21	0.5 - 0.5	52	NA	**19 N**	NA	NA	**Yes**	ASL
95-63-6	**1,2,4-Trimethylbenzene**	3.6	3.6	ug/L	DA-MW7B-062210	1/21	0.5 - 0.5	3.6	NA	**2.4 N**	NA	NA	**Yes**	ASL
108-67-8	1,3,5-Trimethylbenzene	0.66 J	0.66 J	ug/L	DA-MW7B-062210	1/21	0.5 - 0.5	0.66	NA	2.5 N	NA	NA	No	BSL
67-64-1	Acetone	3.6 J	5.2	ug/L	DA-MW7B-062210	2/21	2.5 - 27	5.2	NA	22,000 N	NA	NA	No	BSL
56-23-5	**Carbon Tetrachloride**	1.85	1.85	ug/L	DA-MW-03B-062810-AVG	1/21	0.5 - 0.5	1.85	NA	**0.13 C[7]**	NA	NA	**Yes**	ASL
75-00-3	Chloroethane	1.9 J	94	ug/L	DA-MW101B-062310	4/21	1 - 1	94	NA	2,800 N	NA	NA	No	BSL
156-59-2	**cis-1,2-Dichloroethene**	0.37 J	26	ug/L	DA-GW-MW128B-080910	14/21	0.5 - 0.5	26	NA	**21 N**	NA	NA	**Yes**	ASL
100-41-4	Ethylbenzene	0.76 J	0.76 J	ug/L	DA-MW7B-062210	1/21	0.5 - 0.5	0.76	NA	3.04 C[7]	NA	NA	No	BSL
98-82-8	Isopropylbenzene	0.51 J	0.51 J	ug/L	DA-MW7B-062210	1/21	0.5 - 0.5	0.51	NA	0.84 N	NA	NA	No	BSL
104-51-8	N-Butylbenzene	0.39 J	0.39 J	ug/L	DA-MW7B-062210	1/21	0.5 - 0.5	0.39	NA	26 N	NA	NA	No	BSL
103-65-1	N-Propylbenzene	0.9 J	0.9 J	ug/L	DA-MW7B-062210	1/21	0.5 - 0.5	0.9	NA	32 N	NA	NA	No	BSL
95-47-6	o-Xylene	0.79 J	0.79 J	ug/L	DA-MW7B-062210	1/21	0.5 - 0.5	0.79	NA	3,300 N	NA	NA	No	BSL
135-98-8	sec-Butylbenzene	0.48 J	0.48 J	ug/L	DA-MW7B-062210	1/21	0.5 - 0.5	0.48	NA	25 N	NA	NA	No	BSL
127-18-4	**Tetrachloroethene**	0.53 J	2.7	ug/L	DA-MW104B-061810	5/21	0.5 - 0.5	2.7	NA	**0.55 C[7]**	NA	NA	**Yes**	ASL
108-88-3	Toluene	0.68 J	0.68 J	ug/L	DA-MW7B-062210	1/21	0.5 - 0.5	0.68	NA	150 N	NA	NA	No	BSL
540-59-0	Total 1,2-Dichloroethene	0.37 J	29.7	ug/L	DA-GW-MW128B-080910	14/21	0.5 - 0.5	29.7	NA	NA	NA	NA	No	NTX
1330-20-7	Total Xylenes	0.79 J	0.79 J	ug/L	DA-MW7B-062210	1/21	0.75 - 0.75	0.79	NA	2,200 N[8]	NA	NA	No	BSL
156-60-5	trans-1,2-Dichloroethene	0.36 J	3.7	ug/L	DA-GW-MW128B-080910	2/21	0.5 - 0.5	3.7	NA	18 N	NA	NA	No	BSL
79-01-6	**Trichloroethene**	0.37 J	1200	ug/L	DA-GW-MW128B-080910	16/21	0.5 - 0.5	1200	NA	**2.9 C[7]**	NA	NA	**Yes**	ASL
75-01-4	**Vinyl Chloride**	0.31 J	3.7	ug/L	DA-MW-103B-070110	8/21	1 - 1	3.7	NA	**0.15 C[7]**	NA	NA	**Yes**	ASL
Volatile Gases														
74-84-0	Ethane	3.5 J	3.5 J	ug/L	DA-MW-09B-062910	1/11	2 - 2	3.5	NA	NA	NA	NA	No	NTX
74-82-8	Methane	1.4 J	6000 J	ug/L	DA-MW-09B-062910	11/11	-	6000	NA	NA	NA	NA	No	NTX
Semivolatile Organic Compounds														
123-91-1	1,4-Dioxane	0.054 J	8.3	ug/L	DA-MW-09B-062910	9/14	0.104 - 0.55	8.3	NA	NA	NA	NA	No	NTX
Miscellaneous Parameters														
7664-41-7	Ammonia-N	0.17	4.9	mg/L	DA-MW-09B-062910	2/11	0.05 - 0.05	4.9	NA	NA	NA	NA	No	NTX
14797-55-8	Nitrate-N	0.018 J	0.695	mg/L	DA-MW-03B-062810-AVG	9/11	0.025 - 0.025	0.695	NA	NA	NA	NA	No	NTX
14808-79-8	Sulfate	1.1	39	mg/L	DA-MW-127B-081010	11/11	-	39	NA	NA	NA	NA	No	NTX
18496-25-8	Sulfide	0.7 J	2.2	mg/L	DA-MW101B-062310	3/11	0.8 - 0.8	2.2	NA	NA	NA	NA	No	NTX
--	Total Organic Carbon	0.57 J	2.8	mg/L	DA-MW-09B-062910	11/11	-	2.8	NA	NA	NA	NA	No	NTX
57-12-5	Cyanide	5.6 J	5.6 J	ug/L	DA-MW-09B-062910	1/5	5 - 5	5.6	NA	NA	NA	NA	No	NTX

TABLE 4-8
OCCURRENCE, DISTRIBUTION, AND SELECTION OF CHEMICALS OF POTENTIAL CONCERN - VAPOR INTRUSION (BEDROCK)
SITE 08, NUSC DISPOSAL AREA
SUPPLEMENTAL REMEDIAL INVESTIGATION REPORT
NAVAL STATION NEWPORT, RHODE ISLAND

CAS Number	Chemical	Minimum Concentration(1)	Maximum Concentration(1)	Units	Sample of Maximum Concentration	Frequency of Detection	Range of Nondetects(2)	Concentration Used for Screening(3)	Range of Background Concentrations(4)	Vapor Intrusion Criteria(5)	Potential ARAR/TBC	Potential ARAR/TBC Source	COPC Flag	Rationale for Contaminant Deletion or Selection(6)

Footnotes:
1 - Sample and duplicate are considered as two separate samples when determining the minimum and maximum concentrations.
2 - Values presented are sample-specific quantitation limits.
3 - The maximum detected concentration is used for screening purposes.
4 - Background samples were not collected for the supplemental investigation.
5 - Draft Guidance for Evaluating the Vapor Intrusion to Indoor Air Pathway from Groundwater and Soils. November 2002. EPA530-F-02-052.
Values are from Table 2c of that guidance. The noncarcinogenic values (denoted with a "N" flag) are the screening level divided by 10 to correspond to a target hazard quotient of 0.1. Carcinogenic values represent an incremental cancer risk of 1.0E-06.
6 - The chemical is selected as a COPC if the maximum detected concentration exceeds the risk-based COPC screening level.
7 - The value presented in Table 2c of the draft vapor intrusion guidance is based on the MCL. EPA Region I requires the screening criteria for vapor intrusion to be risk-based. Therefore, the value from Table 2a adjusted for a 1E-6 cancer risk level is presented here.
8 - Value is for p-xylenes.
Shaded criterion indicates that the maximum detected concentration exceeds one or more screening criteria. Shaded chemical name indicates that the chemical was retained as a COPC.

Associated Samples
DA-MW-03B-062810-AVG
DA-MW-04B-063010
DA-MW6B-061710
DA-MW7B-062210
DA-MW8B-062210
DA-MW-09B-062910
DA-MW101B-062310
DA-MW-103B-070110
DA-MW104B-061810
DA-MW-105B-062810
DA-GW-MW116B-D1-0810
DA-GW-MW116B-D2-0810
DA-MW-117B-D1-081110
DA-MW-117B-D2-081110
DA-MW-118B-D1-081010
DA-MW-118B-D2-081010
DA-MW-127B-081010
DA-GW-MW128B-080910
DA-MW-129B-081010-AVG
DA-GW-MW130B-080910
DA-MW-13B-063010

Definitions:
ARAR/TBC = Applicable or Relevant and Appropriate Requirements To Be Considered
C = Carcinogen
CAS = Chemical Abstracts Service
COPC = Chemical Of Potential Concern
J = Estimated value
NA = Not Applicable/Not Available

Rationale Codes:
For selection as a COPC:
ASL = Above Screening Level.

For elimination as a COPC:
BSL = Below COPC Screening Level
NUT = Essential nutrient
NTX = No toxicity criteria

TABLE 4-9
OCCURRENCE, DISTRIBUTION, AND SELECTION OF CHEMICALS OF POTENTIAL CONCERN - DIRECT CONTACT WITH SEDIMENT
SITE 08, NUSC DISPOSAL AREA
SUPPLEMENTAL REMEDIAL INVESTIGATION REPORT
NAVAL STATION NEWPORT, RHODE ISLAND

CAS Number	Chemical	Minimum Concentration[1]	Maximum Concentration[1]	Units	Sample of Maximum Concentration	Frequency of Detection	Range of Nondetects[2]	Concentration Used for Screening[3]	Range of Background Concentrations[4]	EPA RSL Residential Soil[5]	RIDEM Residential Direct Exposure Criteria[6]	COPC Flag	Rationale for Contaminant Deletion or Selection[7]
Volatile Organic Compounds													
71-55-6	1,1,1-Trichloroethane	1.6 J	1.6 J	ug/kg	DA-SD-B179-04-0006	1/3	3 - 6.8	1.6	NA	870,000 N	540,000	No	BSL
75-34-3	1,1-Dichloroethane	3.7 J	3.7 J	ug/kg	DA-SD-B179-04-0006	1/3	3 - 6.8	3.7	NA	3,300 C	920,000	No	BSL
67-64-1	Acetone	27 J	120 J	ug/kg	DA-SD-B179-01-081210	2/3	11 - 11	120	NA	6,100,000 N	7,800,000	No	BSL
75-15-0	Carbon Disulfide	14 J	14 J	ug/kg	DA-SD-B179-01-081210	1/3	1.3 - 2.1	14	NA	82,000 N	NA	No	BSL
Semivolatile Organic Compounds													
91-57-6	2-Methylnaphthalene	23.5 J	23.5 J	ug/kg	DA-SD-B179-01-0006-AVG	1/3	12 - 16	23.5	8.25 - 40	31,000 N	123,000	No	BSL
83-32-9	Acenaphthene	12 J	155 J	ug/kg	DA-SD-B179-01-0006-AVG	3/3	-	155	12 - 130	340,000 N	43,000	No	BSL
120-12-7	Anthracene	26	210 J	ug/kg	DA-SD-B179-01-0006-AVG	3/3	-	210	20 - 680	1,700,000 N	35,000	No	BSL
56-55-3	**Benzo(a)anthracene**	71	780	ug/kg	DA-SD-B179-01-0006-AVG	3/3	-	780	100 - 1,900	**150 C**	900	**Yes**	ASL
50-32-8	**Benzo(a)pyrene**	69	590 J	ug/kg	DA-SD-B179-01-0006-AVG	3/3	-	590	120 - 2,500	**15 C**	**400**	**Yes**	ASL
205-99-2	**Benzo(b)fluoranthene**	120	845	ug/kg	DA-SD-B179-01-0006-AVG	3/3	-	845	210 - 4,300	**150 C**	900	**Yes**	ASL
191-24-2	Benzo(g,h,i)perylene	43	330	ug/kg	DA-SD-B179-02-0006	3/3	-	330	89 - 2,800	170,000 N[8]	800	No	BSL
207-08-9	Benzo(k)fluoranthene	47	235	ug/kg	DA-SD-B179-01-0006-AVG	3/3	-	235	62 - 1,700	1,500 C	900	No	BSL
86-74-8	Carbazole	230 J	230 J	ug/kg	DA-SD-B179-01-0006-AVG	1/3	290 - 380	230	60 - 410	NA	NA	No	BSL
218-01-9	**Chrysene**	74	735	ug/kg	DA-SD-B179-01-0006-AVG	3/3	-	735	130 - 3,200	15,000 C	**400**	**Yes**	ASL
53-70-3	**Dibenzo(a,h)anthracene**	12 J	81.5	ug/kg	DA-SD-B179-01-0006-AVG	3/3	-	81.5	20 - 620	**15 C**	400	**Yes**	ASL
132-64-9	Dibenzofuran	180 J	180 J	ug/kg	DA-SD-B179-01-0006-AVG	1/3	290 - 380	180	230 - 230	7,800 N	NA	No	BSL
206-44-0	Fluoranthene	160	1,800 J	ug/kg	DA-SD-B179-01-0006-AVG	3/3	-	1,800	280 - 4,600	230,000 N	20,000	No	BSL
86-73-7	Fluorene	8.9 J	180 J	ug/kg	DA-SD-B179-01-0006-AVG	3/3	-	180	16 - 250	230,000 N	28,000	No	BSL
193-39-5	**Indeno(1,2,3-cd)pyrene**	60	325	ug/kg	DA-SD-B179-01-0006-AVG	3/3	-	325	81 - 2,100	**150 C**	900	**Yes**	ASL
91-20-3	Naphthalene	5.1 J	134 J	ug/kg	DA-SD-B179-01-0006-AVG	3/3	-	134	9.25 - 360	3,600 C	54,000	No	BSL
85-01-8	Phenanthrene	98	1,420 J	ug/kg	DA-SD-B179-01-0006-AVG	3/3	-	1,420	100 - 2,900	170,000 N[8]	40,000	No	BSL
129-00-0	Pyrene	140	1,450	ug/kg	DA-SD-B179-01-0006-AVG	3/3	-	1,450	190 - 4,600	170,000 N	13,000	No	BSL
--	**Benzo(a)pyrene Equivalents**	94.7	788	ug/kg	DA-SD-B179-01-0006-AVG	3/3	-	788	NA	**15 C**	**400**	**Yes**	ASL
Petroleum Hydrocarbons													
- -	TPH (C09-C36)	34 J	640 J	mg/kg	DA-SD-B179-01-081210	3/3	-	640	NA	NA	**500**	No	NTX

Footnotes:
1 - Sample and duplicate are considered as two separate samples when determining the minimum and maximum concentrations.
2 - Values presented are sample-specific quantitation limits.
3 - The maximum detected concentration is used for screening purposes.
4 - No background data is available for sediment.
5 - EPA Regional Screening Levels for Chemical Contaminants at Superfund Sites, May 2010. The noncarcinogenic values (denoted with a "N" flag) are the screening level divided by 10 to correspond to a target hazard quotient of 0.1. Carcinogenic values represent an incremental cancer risk of 1.0E-06 (carcinogens denoted with a "C" flag).
6 - Rhode Island Department of Environmental Management (RIDEM), DEM-DSR-01-93, February 2004.
7 - The chemical is selected as a COPC if the maximum detected concentration exceeds the risk-based COPC screening level.
8 - Value is for pyrene.
Shaded criterion indicates that the maximum detected concentration exceeds one or more screening criteria. Shaded chemical name indicates that the chemical was retained as a COPC.

Associated Samples
DA-SD-B179-02-0006
DA-SD-B179-04-0006
DA-SD-B179-01-081210
DA-SD-B179-02-081210-AVG
DA-SD-B179-04-081210
DA-SD-B179-01-0006-AVG

Definitions:
C = Carcinogen
CAS = Chemical Abstracts Service
COPC = Chemical Of Potential Concern
J = Estimated value
N = Noncarcinogen
NA = Not Applicable/Not Available

Rationale Codes:
For selection as a COPC:
ASL = Above Screening Level.

For elimination as a COPC:
BSL = Below COPC Screening Level
NUT = Essential nutrient
NTX = No toxicity criteria

TABLE 4-10
CHEMICALS IDENTIFIED AS COPCs FROM THE SRI DATA
SITE 08, NUSC DISPOSAL AREA
SUPPLEMENTAL REMEDIAL INVESTIGATION REPORT
NAVAL STATION NEWPORT, RHODE ISLAND

Parameter	Surface Soil	Subsurface Soil	Groundwater				Surface Water	Sediment
			Overburden-Bedrock Interface		Bedrock			
	Direct Contact	Direct Contact	Direct Contact	Vapor Intrusion	Direct Contact	Vapor Intrusion		
Volatile Organic Compounds								
1,1,1-Trichloroethane			X	X	X			
1,1,2-Trichloroethane					X			
1,1-Dichloroethane			X	X	X	X		
1,1-Dichloroethene			X		X	X		
1,2,4-Trimethylbenzene					X	X		
Carbon Tetrachloride					X	X		
cis-1,2-Dichloroethene						X		
Isopropylbenzene				X				
Tetrachloroethene			X	X	X	X		
Trichloroethene			X	X	X	X		
Vinyl Chloride					X	X		
Semivolatile Organic Compounds								
1,4-Dioxane					X			
Benzo(a)anthracene	X	X						X, B
Benzo(a)pyrene	X	X						X, B
Benzo(b)fluoranthene	X	X						X, B
Benzo(g,h,i)perylene	X							
Benzo(k)fluoranthene	X							
Chrysene	X							X, B
Dibenzo(a,h)anthracene	X	X						X, B
Indeno(1,2,3-cd)pyrene	X							X, B
Benzo(a)pyrene Equivalents	X	X						X
Energetics								
1,2-Propylene Glycol Dinitrate			X					
Metals								
Aluminum	X, B	X						
Arsenic	X, B	X, B						
Beryllium	X, B	X, B						
Cobalt	X, B	X						
Iron	X, B	X, B						
Manganese	X, B	X, B						

Notes:

X - Chemical was retained as a COPC in the SRI evaluation.

B - Concentrations of chemicals are within the range of base-wide background concentrations.

Chemicals which were not identified as COPCs in the RI report are shaded.

TABLE 4-11
COMPARISON OF SURFACE SOIL CONCENTRATIONS
SITE 08, NUSC DISPOSAL AREA
SUPPLEMENTAL REMEDIAL INVESTIGATION REPORT
NAVAL STATION NEWPORT, RHODE ISLAND

Parameter	RI Report[1]				Supplemental RI	
	Exposed Area		Paved Area			
	Range of Detections	Exposure Point Concentration[2]	Range of Detections	Exposure Point Concentration[2]	Range of Detections	Exposure Point Concentration[2]
Semivolatile Organic Compounds (ug/kg)						
Benzo(a)anthracene	15 - 20,000	3,220	2.6 - 5,600	2,690	19 - 3,600	3,600
Benzo(a)pyrene	18 - 17,000	2,440	7.3 - 4,800	2,320	19 - 2,550	2,550
Benzo(b)fluoranthene	24.5 - 15,000	2,550	14 - 5,700	2,750	28 - 3,750	3,750
Benzo(g,h,i)perylene	12 - 7,400	960	3 - 2,000	551	13 - 1,350	1,350
Benzo(k)fluoranthene	13 - 12,000	1,880	6.8 - 3,900	1,100	9.7 - 1,230	1,230
Chrysene	13 - 17,000	2,870	2.8 - 5,700	1,500	20 - 3,350	3,350
Dibenzo(a,h)anthracene	5.4 - 3,500	400	10 - 760	141	12 - 445	445
Indeno(1,2,3-cd)pyrene	15 - 9,200	1,100	8.25 - 2,200	1,120	14 - 1,800	1,800
Metals (mg/kg)						
Aluminum	1,800 - 20,700	12,256	4,100 - 19,500	10,938	3,280 - 13,100	13,100
Arsenic	0.29 - 90	23.9	1.7 - 41	18.6	0.53 - 5	5
Beryllium	0.21 - 0.74	0.434	0.21 - 0.57	0.395	0.205 - 0.43	0.43
Cobalt	0.82 - 218	27.1	2.7 - 28	12.9	1.9 - 6.65	6.65
Iron	5270 - 43,700	27,468	8,540 - 38,900	26,054	6,990 - 16,600	16,600
Manganese	79.8 - 2,020	436	150 - 827	418	142 - 324	324

Notes:

1 - Remedial Investigation for Site 08, NUSC Disposal Area (Tetra Tech 2010a)

2 - The 95% UCL as calculated by EPA's ProUCL was used as the exposure point concentratinon for soil.

TABLE 4-12
COMPARISON OF SUBSURFACE SOIL CONCENTRATIONS
SITE 08, NUSC DISPOSAL AREA
SUPPLEMENTAL REMEDIAL INVESTIGATION REPORT
NAVAL STATION NEWPORT, RHODE ISLAND

Parameter	RI Report[1]				Supplemental RI	
	Exposed Area		Paved Area			
	Range of Detections	Exposure Point Concentration[2]	Range of Detections	Exposure Point Concentration[2]	Range of Detections	Exposure Point Concentration[2]
Semivolatile Organic Compounds (ug/kg)						
Benzo(a)anthracene	3.2 - 1,900,000	302,000	5.4 - 7,700	2,800	5.2 - 160	78.9
Benzo(a)pyrene	6.2 - 1,500,000	243,000	5.6 - 5,700	1,400	4.9 - 140	72.2
Benzo(b)fluoranthene	7.2 - 1,300,000	210,000	12.2 - 6,500	1,590	17 - 220	73.0
Dibenzo(a,h)anthracene	4.5 - 330,000	52,700	6.9 - 700	108	2.3 - 23	10.7
Metals (mg/kg)						
Aluminum	4,450 - 27,200	13,532	3,800 - 20,700	12,570	8,230 - 21,000	13,663
Arsenic	2.7 - 40	17.7	2.25 - 122	35	2.8 - 27.3	15.5
Beryllium	0.21 - 2.5	0.518	0.2 - 0.76	0.47	0.3 - 0.6	0.433
Cobalt	3.4 - 35.6	16.1	5.7 - 21.5	13.5	4.2 - 23.8	13.3
Iron	3,800 - 134,000	41,374	13,000 - 40,000	29,083	13,300 - 40,700	27,442
Manganese	180 - 3,300	835	171 - 2,820	1,100	154 - 1,100	503

Notes:

1 - Remedial Investigation for Site 08, NUSC Disposal Area (Tetra Tech 2010a)

2 - The 95% UCL as calculated by EPA's ProUCL was used as the exposure point concentratinon for soil.

TABLE 4-13
COMPARISON OF GROUNDWATER CONCENTRATIONS FOR DIRECT CONTACT EXPOSURES
SITE 08, NUSC DISPOSAL AREA
SUPPLEMENTAL REMEDIAL INVESTIGATION REPORT
NAVAL UNDERWATER SYSTEMS CENTER, NEWPORT, RHODE ISLAND

Parameter	RI Report[1]		Supplemental RI	
	Range of Detections	Exposure Point Concentration[2]	Range of Detections	Exposure Point Concentration[2]
Volatile Organic Compounds (ug/L)				
1,1,1-Trichloroethane	NC	NC	0.29 - 440	440
1,1,2-Trichloroethane	NC	NC	0.48 - 0.48	0.48
1,1-Dichloroethane	0.4 - 310	310	0.28 - 1,000	1,000
1,1-Dichloroethene	NC	NC	0.45 - 52	52
1,2,4-Trimethylbenzene	0.3 - 810	810	0.51 - 3.6	3.6
Carbon Tetrachloride	2	2	1.85	1.85
Tetrachloroethene	0.5 - 12	12	0.53 - 8.3	8.3
Trichloroethene	2 - 730	730	0.37 - 1,200	1,200
Vinyl Chloride	0.3 - 19	19	0.31 - 3.7	3.7
Semivolatile Organic Compounds (ug/L)				
1,4-Dioxane	NA	NA	0.054 - 8.3	8.3
Energetics (ug/L)				
1,2-Propylene Glycol Dinitrate	NA	NA	0.11	0.11

Notes:
NC - Chemical was not a COPC for groundwater in the RI Report.
NA - Chemical was not analyzed for in samples collected for the RI report.
1 - Remedial Investigation for Site 08, NUSC Disposal Area (Tetra Tech 2010a)
2 - The maximum detected concentration is used as the exposure point concentration for groundwater.

TABLE 4-14
COMPARISON OF GROUNDWATER CONCENTRATIONS FOR VAPOR INTRUSION
SITE 08, NUSC DISPOSAL AREA
SUPPLEMENTAL REMEDIAL INVESTIGATION REPORT
NAVAL STATION NEWPORT, RHODE ISLAND

Parameter	RI Report[(1)]		Supplemental RI	
	Range of Detections	Exposure Point Concentration[(2)]	Range of Detections	Exposure Point Concentration[(2)]
Volatile Organic Compounds (ug/L)				
1,1,1-Trichloroethane	NC	NC	440	440
1,1-Dichloroethane	NC	NC	0.48	0.48
Isopropylbenzene	NC	NC	1.3	1.3
Tetrachloroethene	0.5 - 2	2	0.58 - 8.3	8.3
Trichloroethene	0.9	0.9	0.57 - 3.9	3.9

Notes:
NC - Chemical was not a COPC for groundwater in the RI Report.
1 - Remedial Investigation for Site 08, NUSC Disposal Area (Tetra Tech 2010a)
2 - The maximum detected concentration is used as the exposure point concentration for groundwater.

TABLE 4-15
COMPARISON OF SEDIMENT CONCENTRATIONS
SITE 08, NUSC DISPOSAL AREA
SUPPLEMENTAL REMEDIAL INVESTIGATION REPORT
NAVAL STATION NEWPORT, RHODE ISLAND

Parameter	RI Report[1]		Supplemental RI	
	Range of Detections	Exposure Point Concentration[2]	Range of Detections	Exposure Point Concentration[2]
Semivolatile Organic Compounds (ug/kg)				
Benzo(a)anthracene	16 - 3,400	1,370	71 - 780	780
Benzo(a)pyrene	15 - 2,600	1,130	69 - 590	590
Benzo(b)fluoranthene	27 - 2,300	1,060	120 - 845	845
Chrysene	8.7 - 3,300	1,380	74 - 735	735
Dibenzo(a,h)anthracene	11 - 640	140	12 - 81.5	81.5
Indeno(1,2,3-cd)pyrene	9.5 - 1,700	677	60 - 325	325

Notes:

1 - Remedial Investigation for Site 08, NUSC Disposal Area (Tetra Tech 2010a)

2 - The 95% UCL as calculated by EPA's ProUCL was used as the exposure point concentratinon for sediment.

TABLE 4-16
SUMMARY OF CANCER RISKS AND HAZARD INDICES PRESENT IN THE RI REPORT[1]
REASONABLE MAXIMUM EXPOSURES
SITE 08, NUSC DISPOSAL AREA
SUPPLEMENTAL REMEDIAL INVESTIGATION REPORT
NAVAL STATION NEWPORT, RHODE ISLAND

Receptor	Media	Cancer Risk	Chemicals with Cancer Risks > 10^{-4}	Chemicals with Cancer Risks > 10^{-5} and ≤ 10^{-4}	Chemicals with Cancer Risks > 10^{-6} and ≤ 10^{-5}	Hazard Index	Chemicals Contributing to an Target Organ HI > 1
Construction Workers	Surface Soil - Exposed Area	3E-06	- -	- -	- -	2	Target Organ HIs ≤ 1
	Subsurface Soil - Exposed Area	9E-05	- -	Benzo(a)pyrene	Benzo(a)anthracene, Benzo(b)fluoranthene, Dibenzo(a,h)anthracene, Indeno(1,2,3-cd)pyrene	2	Aluminum, ***Manganese***
	Surface Soil - Paved Area	2E-06	- -	- -	- -	1	- -
	Subsurface Soil - Paved Area	3E-06	- -	- -	Arsenic	3	Aluminum, ***Manganese***
	Groundwater	5E-06	- -	- -	Arsenic	10	Aluminum, Beryllium, Chromium, Iron, Manganese
Total Exposed Area Surface Soil and Groundwater		8E-06				11	
Total Exposed Area Subsurface Soil and Groundwater		1E-04				12	
Total Paved Area Surface Soil and Groundwater		7E-06				11	
Total Paved Area Subsurface Soil and Groundwater		8E-06				12	
Industrial Workers	Surface Soil - Exposed Area	3E-05	- -	- -	Benzo(a)pyrene, Dibenzo(a,h)anthracene, Arsenic	0.3	- -
	Subsurface Soil - Exposed Area	2E-03	Benzo(a)pyrene, Dibenzo(a,h)anthracene	Benzo(a)anthracene, Benzo(b)fluoranthene, Indeno(1,2,3-cd)pyrene	Benzo(k)fluoranthene, Arsenic	0.3	- -
	Surface Soil - Paved Area	3E-05	- -	- -	Benzo(a)pyrene, Arsenic	0.2	- -
	Subsurface Soil - Paved Area	3E-05	- -	Arsenic	Benzo(a)pyrene, Total Aroclors	0.3	- -
Adolescent Trespassers	Surface Soil - Exposed Area	1E-05	- -	- -	Benzo(a)pyrene, Arsenic	0.08	- -
	Subsurface Soil - Exposed Area	1E-03	Benzo(a)pyrene, Dibenzo(a,h)anthracene	Benzo(a)anthracene, Benzo(b)fluoranthene,, Indeno(1,2,3-cd)pyrene	- -	0.1	- -
	Surface Soil - Paved Area	1E-05	- -	- -	Benzo(a)pyrene, Arsenic	0.05	- -
	Subsurface Soil - Paved Area	1E-05	- -	- -	Benzo(a)pyrene, Arsenic	0.08	- -
	Surface Water	5E-08	- -	- -	- -	0.002	- -
	Sediment	1E-05	- -	- -	Benzo(a)pyrene, Arsenic	0.1	- -
Total Exposed Area Surface Soil, Surface Water and Sediment		3E-05				0.2	
Total Exposed Area Subsurface Soil, Surface Water and Sediment		1E-03				0.3	
Total Paved Area Surface Soil, Surface Water and Sediment		2E-05				0.2	
Total Paved Area Subsurface Soil, Surface Water and Sediment		2E-05				0.2	

TABLE 4-16
SUMMARY OF CANCER RISKS AND HAZARD INDICES PRESENT IN THE RI REPORT[1]
REASONABLE MAXIMUM EXPOSURES
SITE 08, NUSC DISPOSAL AREA
SUPPLEMENTAL REMEDIAL INVESTIGATION REPORT
NAVAL STATION NEWPORT, RHODE ISLAND

Receptor	Media	Cancer Risk	Chemicals with Cancer Risks > 10^{-4}	Chemicals with Cancer Risks > 10^{-5} and ≤ 10^{-4}	Chemicals with Cancer Risks > 10^{-6} and ≤ 10^{-5}	Hazard Index	Chemicals Contributing to an Target Organ HI > 1
Child Recreational Users	Surface Soil - Exposed Area	3E-05	- -	Benzo(a)pyrene	Benzo(a)anthracene, Benzo(b)fluoranthene, Dibenzo(a,h)anthracene, Arsenic	0.4	- -
	Subsurface Soil - Exposed Area	3E-03	Benzo(a)anthracene, Benzo(a)pyrene, Benzo(b)fluoranthene, Dibenzo(a,h)anthracene	Indeno(1,2,3-cd)pyrene	Arsenic	0.6	- -
	Surface Soil - Paved Area	3E-05	- -	Benzo(a)pyrene	Benzo(a)anthracene, Benzo(b)fluoranthene, Arsenic	0.3	- -
	Subsurface Soil - Paved Area	3E-05	- -	- -	Benzo(a)anthracene, Benzo(a)pyrene, Arsenic	0.4	- -
	Surface Water	5E-08	- -	- -	- -	0.008	- -
	Sediment	2E-05	- -	- -	Benzo(a)pyrene, Arsenic	0.8	- -
	Fish	5E-05	- -	Total Aroclors	4,4'-DDE, Dieldrin	0.8	- -
Total Exposed Area Surface Soil, Surface Water, Sediment, and Fish		1E-04				2	
Total Exposed Area Subsurface Soil, Surface Water, Sediment and Fish		3E-03				2	
Total Paved Area Surface Soil, Surface Water, Sediment and Fish		1E-04				2	
Total Paved Area Subsurface Soil, Surface Water, Sediment and Fish		1E-04				2	
Adult Recreational Users	Surface Soil - Exposed Area	7E-06	- -	- -	Benzo(a)pyrene, Arsenic	0.05	- -
	Subsurface Soil - Exposed Area	5E-04	Benzo(a)pyrene	Benzo(a)anthracene, Benzo(b)fluoranthene, Dibenzo(a,h)anthracene, Indeno(1,2,3-cd)pyrene	Arsenic	0.06	- -
	Surface Soil - Paved Area	6E-06	- -	- -	Benzo(a)pyrene, Arsenic	0.03	- -
	Subsurface Soil - Paved Area	7E-06	- -	- -	Benzo(a)pyrene, Arsenic	0.05	- -
	Surface Water	1E-07	- -	- -	- -	0.003	- -
	Sediment	4E-06	- -	- -	Benzo(a)pyrene, Arsenic	0.08	- -
	Fish	1E-04		Total Aroclors, Dieldrin	Aldrin, 4,4'-DDE	0.5	- -
Total Exposed Area Surface Soil, Surface Water, Sediment, and Fish		2E-04				0.6	
Total Exposed Area Subsurface Soil, Surface Water, Sediment and Fish		6E-04				0.6	
Total Paved Area Surface Soil, Surface Water, Sediment and Fish		2E-04				0.6	
Total Paved Area Subsurface Soil, Surface Water, Sediment and Fish		2E-04				0.6	

TABLE 4-16
SUMMARY OF CANCER RISKS AND HAZARD INDICES PRESENT IN THE RI REPORT[1]
REASONABLE MAXIMUM EXPOSURES
SITE 08, NUSC DISPOSAL AREA
SUPPLEMENTAL REMEDIAL INVESTIGATION REPORT
NAVAL STATION NEWPORT, RHODE ISLAND

Receptor	Media	Cancer Risk	Chemicals with Cancer Risks > 10^{-4}	Chemicals with Cancer Risks > 10^{-5} and ≤ 10^{-4}	Chemicals with Cancer Risks > 10^{-6} and ≤ 10^{-5}	Hazard Index	Chemicals Contributing to an Target Organ HI > 1
Lifelong Recreational Users (Child and Adult)	Surface Soil - Exposed Area	4E-05	- -	Benzo(a)pyrene	Benzo(a)anthracene, Benzo(b)fluoranthene, Dibenzo(a,h)anthracene, Arsenic	NA	- -
	Subsurface Soil - Exposed Area	3E-03	Benzo(a)anthracene, Benzo(a)pyrene, Benzo(b)fluoranthene, Dibenzo(a,h)anthracene	Indeno(1,2,3-cd)pyrene	Arsenic	NA	- -
	Surface Soil - Paved Area	4E-05	- -	Benzo(a)pyrene	Benzo(a)anthracene, Benzo(b)fluoranthene, Arsenic	NA	- -
	Subsurface Soil - Paved Area	3E-05	- -	- -	Benzo(a)anthracene, Benzo(a)pyrene, Arsenic	NA	- -
	Surface Water	2E-07	- -	- -	- -	NA	- -
	Sediment	2E-05	- -	- -	Benzo(a)pyrene, Arsenic	NA	- -
	Fish	2E-04	- -	Total Aroclors, 4,4'-DDE, Dieldrin	Aldrin	NA	- -
Total Exposed Area Surface Soil, Surface Water, Sediment, and Fish		3E-04				NA	
Total Exposed Area Subsurface Soil, Surface Water, Sediment and Fish		4E-03				NA	
Total Paved Area Surface Soil, Surface Water, Sediment and Fish		3E-04				NA	
Total Paved Area Subsurface Soil, Surface Water, Sediment and Fish		2E-04				NA	
Hypothetical Child Residents	Surface Soil - Exposed Area	3E-04	- -	Benzo(a)anthracene, Benzo(a)pyrene, Dibenzo(a,h)anthracene, Arsenic	Benzo(b)fluoranthene, Indeno(1,2,3-cd)pyrene	3	Target Organs HI ≤ 1
	Subsurface Soil - Exposed Area	2E-02	Benzo(a)anthracene, Benzo(a)pyrene, Benzo(b)fluoranthene, Dibenzo(a,h)anthracene, Indeno(1,2,3-cd)pyrene	Arsenic	Total Aroclors	4	Target Organs HI ≤ 1
	Surface Soil - Paved Area	2E-04	- -	Benzo(a)anthracene, Benzo(a)pyrene, Benzo(b)fluoranthene, Arsenic	Dibenzo(a,h)anthracene, Indeno(1,2,3-cd)pyrene	2	Target Organs HI ≤ 1
	Subsurface Soil - Paved Area	2E-04	- -	Benzo(a)anthracene, Benzo(a)pyrene, Arsenic	Benzo(b)fluoranthene, Dibenzo(a,h)anthracene, Indeno(1,2,3-cd)pyrene, Total Aroclors	3	Arsenic
	Groundwater	7E-03	TCE, Vinyl Chloride, Arsenic	1,1-DCA, PCE	Carbon Tetrachloride, Chloroform, Chloromethane, Ethylbenzene, Benzo(b)fluoranthene, Dieldrin	679	1,1-DCA, 1,3,5-Trimethylbenzene, Bromomethane, Carbon Tetrachloride, Chloroform, Ethyl Benzene, Isopropylbenzene, PCE, Vinyl Chloride, Total Xylenes Aluminum, Antimony, Arsenic, Barium, Beryllium, Chromium, Cobalt, Copper, Manganese, Nickel, Thallium, Vanadium, Zinc
Total Exposed Area Surface Soil and Groundwater		8E-03				682	
Total Exposed Area Subsurface Soil and Groundwater		3E-02				683	
Total Paved Area Surface Soil and Groundwater		7E-03				681	
Total Paved Area Subsurface Soil and Groundwater		7E-03				682	

TABLE 4-16
SUMMARY OF CANCER RISKS AND HAZARD INDICES PRESENT IN THE RI REPORT[1]
REASONABLE MAXIMUM EXPOSURES
SITE 08, NUSC DISPOSAL AREA
SUPPLEMENTAL REMEDIAL INVESTIGATION REPORT
NAVAL STATION NEWPORT, RHODE ISLAND

Receptor	Media	Cancer Risk	Chemicals with Cancer Risks > 10^{-4}	Chemicals with Cancer Risks > 10^{-5} and ≤ 10^{-4}	Chemicals with Cancer Risks > 10^{-6} and ≤ 10^{-5}	Hazard Index	Chemicals Contributing to an Target Organ HI > 1
Hypothetical Adult Residents	Surface Soil - Exposed Area	5E-05	- -	Benzo(a)pyrene, Arsenic	Benzo(a)anthracene, Benzo(b)fluoranthene, Dibenzo(a,h)anthracene	0.4	- -
	Subsurface Soil - Exposed Area	3E-03	Benzo(a)anthracene, Benzo(a)pyrene, Benzo(b)fluoranthene, Dibenzo(a,h)anthracene	Indeno(1,2,3-cd)pyrene	Arsenic, Naphthalene	0.5	- -
	Surface Soil - Paved Area	4E-05	- -	Benzo(a)pyrene	Benzo(a)anthracene, Benzo(b)fluoranthene, Arsenic	0.2	- -
	Subsurface Soil - Paved Area	5E-05	- -	Arsenic	Benzo(a)anthracene, Benzo(a)pyrene, Benzo(b)fluoranthene, Total Aroclors	0.4	- -
	Groundwater	8E-03	PCE, TCE, Vinyl Chloride, Arsenic	1,1-DCA, Ethylbenzene	Carbon Tetrachloride, Chloroform, Chloromethane, Benzo(b)fluoranthene, Dieldrin	209	1,3,5-Trimethylbenzene, Vinyl Chloride, Aluminum, Arsenic, Barium, Beryllium, Carbon Tetrachloride, Chromium, Cobalt, Copper, Iron, Manganese, Nickel, Thallium, Vanadium, Zinc
Total Exposed Area Surface Soil and Groundwater		2E-04				209	
Total Exposed Area Subsurface Soil and Groundwater		1E-02				209	
Total Paved Area Surface Soil and Groundwater		8E-03				209	
Total Paved Area Subsurface Soil and Groundwater		8E-03				209	
Hypothetical Lifelong Residents (Child and Adult)	Surface Soil - Exposed Area	3E-04	Benzo(a)pyrene	Benzo(a)anthracene, Benzo(b)fluoranthene, Dibenzo(a,h)anthracene, Arsenic	Indeno(1,2,3-cd)pyrene	NA	- -
	Subsurface Soil - Exposed Area	2E-02	Benzo(a)anthracene, Benzo(a)pyrene, Benzo(b)fluoranthene, Dibenzo(a,h)anthracene, Indeno(1,2,3-cd)pyrene	Arsenic	Total Aroclors	NA	- -
	Surface Soil - Paved Area	3E-04	Benzo(a)pyrene	Benzo(a)anthracene, Benzo(b)fluoranthene, Arsenic	Indeno(1,2,3-cd)pyrene,	NA	- -
	Subsurface Soil - Paved Area	2E-04	- -	Benzo(a)anthracene, Benzo(a)pyrene, Arsenic	Benzo(b)fluoranthene, Dibenzo(a,h)anthracene, Indeno(1,2,3-cd)pyrene, Total Aroclors	NA	- -
	Groundwater	1E-02	TCE, Vinyl Chloride, Arsenic	1,1-DCA, PCE, Benzo(b)fluoranthene	Carbon Tetrachloride, Chloroform, Chloromethane, Ethylbenzene, Dieldrin	NA	- -
Total Exposed Area Surface Soil and Groundwater		3E-04				NA	
Total Exposed Area Subsurface Soil and Groundwater		4E-02				NA	
Total Paved Area Surface Soil and Groundwater		1E-02				NA	
Total Paved Area Subsurface Soil and Groundwater		1E-02				NA	

Notes:
A bolded chemical name indicates that chemical is present at naturally occurring levels.
1 - Remedial Investigation for Site 08, NUSC Disposal Area (Tetra Tech 2010a)

TABLE 5-1
SEDIMENT STATISTICS AND COMPARISONS
SITE 08, NUSC DISPOSAL AREA
SUPPLEMENTAL REMEDIAL INVESTIGATION REPORT
NAVAL STATION NEWPORT, RHODE ISLAND

Parameter	Additional Samples from SRI				RI Samples Maximum Detected Concentration[1]	Re-Evaluation		
	Frequency of Detection	Maximum Detected Concentration[1]	Ecological Screening Level[2]	Hazard Quotient[3]		NOEC[4]	SRI Sample Max > RI Sample Max?[5]	SRI Sample Max > NOEC?[6]
Volatile Organics (µg/kg)								
1,1,1-TRICHLOROETHANE	1/3	1.6 J	170	0.01	5 J	NA	NO	NA
1,1-DICHLOROETHANE	1/3	3.7 J	27	0.1	0.435 J	NA	YES	NA[7]
ACETONE	2/3	120 J	9	13	740 J	NA	NO	NA
CARBON DISULFIDE	1/3	14 J	0.85	16	5.5 J	NA	YES	NA
Semivolatile Organics (µg/kg)								
2-METHYLNAPHTHALENE	1/3	23.5 J	20.2	1.2	200	NA	NO	NA
ACENAPHTHENE	3/3	155 J	290	0.5	1000	NA	NO	NA
ANTHRACENE	3/3	210 J	57.2	3.7	2000	NA	NO	NA
BENZO(A)ANTHRACENE	3/3	780	108	7.2	3400	NA	NO	NA
BENZO(A)PYRENE	3/3	590 J	150	3.9	2600	NA	NO	NA
BENZO(B)FLUORANTHENE	3/3	845	1800	0.5	2300	NA	NO	NA
BENZO(G,H,I)PERYLENE	3/3	330	170	1.9	1900	NA	NO	NA
BENZO(K)FLUORANTHENE	3/3	235	240	0.98	2300	NA	NO	NA
CARBAZOLE	1/3	230 J	NA	NA	1300	NA	NO	NA
CHRYSENE	3/3	735	166	4.4	3300	NA	NO	NA
DIBENZO(A,H)ANTHRACENE	3/3	81.5	33	2.5	640 J	NA	NO	NA
DIBENZOFURAN	1/3	180 J	2000	0.1	580	NA	NO	NA
FLUORANTHENE	3/3	1800 J	423	4.3	8500	NA	NO	NA
FLUORENE	3/3	180 J	77.4	2.3	1300	NA	NO	NA
INDENO(1,2,3-CD)PYRENE	3/3	325	200	1.6	1700	NA	NO	NA
NAPHTHALENE	3/3	134 J	176	0.8	200	NA	NO	NA
PHENANTHRENE	3/3	1420 J	204	7.0	8000	NA	NO	NA
PYRENE	3/3	1450	195	7.4	7000	NA	NO	NA
HIGH MOLECULAR WEIGHT PAHS	3/3	7140 J	193	37	33640 J	6240	NO	YES
LOW MOLECULAR WEIGHT PAHS	3/3	2120 J	76.4	28	11920 J	NA	NO	NA
TOTAL PAHS	3/3	9250 J	1610	5.7	45560 J	6962	NO	YES

NA - Not Available
NOEC - No Observed Effect Concentration

1 - Sample and duplicate were considered as one sample when determining the minimum and maximum concentrations.
2 - The source for the ecological screening levels is presented on Table 7-3 of the RI (Tetra Tech, 2010a).
3 - Hazard quotients were calculated by dividing the maximum detected concentration by the screening level. Values are unitless.
4 - NOECs are presented on Table 7-30 of the RI (Terta Tech, 2010a). NOECs were not developed for all chemicals.
5 - Cell is highlighted if the chemicals maximum concentration was greater than the RI maximum concentration.
6 - Cell is highlighted if the maximum detected concentration exceeds the NOEC.
7 - A NOEC is not available but the chemical concentration is less than its screening level.

TABLE 5-2
SURFACE SOIL STATISTICS AND COMPARISONS
SITE 08, NUSC DISPOSAL AREA
SUPPLEMENTAL REMEDIAL INVESTIGATION REPORT
NAVAL STATION NEWPORT, RHODE ISLAND

Parameter	Additional Samples from SRI				RI Samples Maximum Detected Concentration[1]	Re-Evaluation		
	Frequency of Detection	Maximum Detected Concentration[1]	Ecological Screening Level[2]	Hazard Quotient[3]		RI NOEC[4]	SRI Max Greater than RI Max?[5]	SRI Max Greater than NOEC?[6]
Volatile Organics (µg/kg)								
1,1,1-TRICHLOROETHANE	1/4	1.8 J	70 [7]	0.03	NA	NA	NA	NA
2-BUTANONE	4/4	17.5 J	NA	NA	12 J	NA	YES	NA
2-HEXANONE	1/4	15 J	NA	NA	NA	NA	NO	NA
ACETONE	3/4	250 J	NA	NA	7900 J	NA	NO	NA
CHLOROFORM	1/4	0.96 J	1 [8]	0.96	NA	NA	NA	NA
TRICHLOROETHENE	1/4	1.02 J	50	0.02	8.5 J	NA	NO	NA
Semivolatile Organics (µg/kg)								
1,1-BIPHENYL	1/3	140 J	60000	0.002	660	NA	NO	NA
2-METHYLNAPHTHALENE	2/3	350 J	29000	0.01	2400 J	NA	NO	NA
ACENAPHTHENE	2/3	900 J	29000	0.03	9500	NA	NO	NA
ANTHRACENE	3/3	1550	29000	0.05	13000	NA	NO	NA
BENZO(A)ANTHRACENE	3/3	3600 J	1100	3.3	20000	NA	NO	NA
BENZO(A)PYRENE	3/3	2550 J	1100	2.3	17000	NA	NO	NA
BENZO(B)FLUORANTHENE	3/3	3750 J	1100	3.4	15000	NA	NO	NA
BENZO(G,H,I)PERYLENE	3/3	1350 J	1100	1.2	7400 J	NA	NO	NA
BENZO(K)FLUORANTHENE	3/3	1230	1100	1.1	12000	NA	NO	NA
BIS(2-ETHYLHEXYL)PHTHALATE	2/3	150 J	100	1.5	4500 J	NA	NO	NA
CARBAZOLE	1/3	1150	NA	NA	7300	NA	NO	NA
CHRYSENE	3/3	3350 J	1100	3.0	17000	NA	NO	NA
DI-N-BUTYL PHTHALATE	1/3	300 J	200000 [9]	0.002	NA	NA	NA	NA
DIBENZO(A,H)ANTHRACENE	2/3	445 J	1100	0.4	3500	NA	NO	NA
DIBENZOFURAN	1/3	800	NA	NA	4700	NA	NO	NA
FLUORANTHENE	3/3	6850 J	29000	0.2	45000	NA	NO	NA
FLUORENE	2/3	1150 J	29000	0.04	5900 J	NA	NO	NA
HIGH MOLECULAR WEIGHT PAHS	3/3	31000 J	NA	NA	193100 J	193100	NO	NO
INDENO(1,2,3-CD)PYRENE	3/3	1800	1100	1.6	9200	NA	NO	NA
LOW MOLECULAR WEIGHT PAHS	3/3	14200 J	NA	NA	89800 J	89800	NO	NO
NAPHTHALENE	2/3	1400	29000	0.05	11000	NA	NO	NA
PHENANTHRENE	3/3	8850 J	29000	0.3	48000 J	NA	NO	NA
PYRENE	3/3	6150 J	1100	5.6	50000	NA	NO	NA
TOTAL PAHS	3/3	45200 J	NA	NA	282900	282900	NO	NO
Pesticides/PCBs (µg/kg)								
4,4'-DDE	2/3	1.12 J	21	0.05	216	NA	NO	NA
4,4'-DDT	1/3	0.82 J	21	0.04	184 J	NA	NO	NA
DIELDRIN	1/3	0.72 J	4.9	0.15	23	NA	NO	NA
ENDOSULFAN SULFATE	2/3	11	0.01 [7]	1100	NA	NA	NA	NA
GAMMA-BHC (LINDANE)	1/3	8.72 J	0.0005 [8]	17440	NA	NA	NA	NA
HEXACHLOROBENZENE	1/3	0.57 J	2.5 [8]	0.2	NA	NA	NA	NA
TOTAL DDD/DDE/DDT	2/3	1.42 J	21	0.07	216	21000	NO	NO
Inorganics (mg/kg)								
ALUMINUM	3/3	8210 J	pH<5.5	pH	20700	16900	NO	NO

TABLE 5-2
SURFACE SOIL STATISTICS AND COMPARISONS
SITE 08, NUSC DISPOSAL AREA
SUPPLEMENTAL REMEDIAL INVESTIGATION REPORT
NAVAL STATION NEWPORT, RHODE ISLAND

Parameter	Additional Samples from SRI				RI Samples Maximum Detected Concentration[1]	Re-Evaluation		
	Frequency of Detection	Maximum Detected Concentration[1]	Ecological Screening Level[2]	Hazard Quotient[3]		RI NOEC[4]	SRI Max Greater than RI Max?[5]	SRI Max Greater than NOEC?[6]
ARSENIC	3/3	5 J	18	0.3	90	60	NO	NO
BARIUM	3/3	33.1 J	330	0.1	42.8	NA	NO	NA
BERYLLIUM	3/3	0.39 J	21	0.02	0.74 J	NA	NO	NA
CADMIUM	1/3	0.905 J	0.36	2.5	11	NA	NO	NA
CALCIUM	3/3	2580 J	NA	NA	8940	NA	NO	NA
CHROMIUM	3/3	18.7	26	0.7	64 J	NA	NO	NA
COBALT	3/3	6.65	13	0.5	218	27.7	NO	NO
COPPER	3/3	18.8	28	0.7	560	80	NO	NO
IRON	3/3	16600	5<pH<8	pH	43700	NA	NO	NA
LEAD	3/3	42.3	11	3.8	2870	1700	NO	NO
MAGNESIUM	3/3	2350 J	NA	NA	6240	NA	NO	NA
MANGANESE	3/3	324	220	1.5	2020	450	NO	NO
MERCURY	1/3	1.25	0.1	13	2	NA	NO	NA
MOLYBDENUM	1/3	1.12 J	2	0.6	7.6	0.7	NO	YES
NICKEL	3/3	14.9	38	0.4	38.5	NA	NO	NA
POTASSIUM	3/3	1510 J	NA	NA	886	NA	YES	NA
SILVER	3/3	0.46 J	4.2	0.1	2	NA	NO	NA
SODIUM	3/3	254	NA	NA	306	NA	NO	NA
THALLIUM	3/3	0.1 J	1	0.1	0.3 J	NA	NO	NA
VANADIUM	3/3	14.4	7.8	1.8	47.2	NA	NO	NA
ZINC	3/3	102	46	2.2	663	152	NO	NO

NA - Not Applicable
NOEC - No Observed Effect Concentration

1 - Sample and duplicate were considered as one sample when determining the minimum and maximum concentrations.
2 - The source for the ecological screening levels is presented in Table 7-4 of the RI (Terta Tech, 2010a).
3 - Hazard quotients were calculated by dividing the maximum detected concentration by the screening level. Values are unitless.
4 - NOECs are presented on Table 7-17 of the RI (Tetra Tech, 2010a). NOECs were not developed for all chemicals.
5 - Cell is highlighted if the chemicals maximum concentration was greater than the RI maximum concentration or the chemical was not detected in the surface soil samples collected during the RI.
6 - Cell is highlighted if the maximum detected concentration exceeds the NOEC.
7 - Dutch TV (MHSPE, 2000).
8 - Region 4 - EPA Region IV Soil Screening Levels (U.S. EPA, 2001b) Value based on the Dutch TV - Target Value (MHSPE, 2000).
9 - Region 4 - EPA Region IV Soil Screening Levels (U.S. EPA, 2001b) Value based on the ORNL Plant - Oak Ridge National Laboratory Plant Toxicological Benchmark (Efroymson, et al. 1997a).

TABLE 6-1
REFINEMENT OF CHEMICALS OF CONCERN IN GROUNDWATER (HUMAN HEALTH)
SITE 08, NUSC DISPOSAL AREA
SUPPLEMENTAL REMEDIAL INVESTIGATION REPORT
NAVAL STATION NEWPORT, NEWPORT RI

Constituent	Site Data (µg/L)[1]			Target Risk Level				Chemical to be Forwarded as a COC to the FS?
	Maximum Detected Concentration [1]	95% UCL [2]	Average Concentration [2]	Incremental Cancer Risk of $1x10^{-6}$ (µg/L)	Incremental Cancer Risk of $1x10^{-5}$ (µg/L)	Incremental Cancer Risk of $1x10^{-4}$ (µg/L)	Hazard Index = 1 (µg/L)	
HYPOTHETICAL CHILD RESIDENTS								
1,1-Dichloroethane	1000	154.5	80.8	22	220	2200	2116	Yes
1,3,5,-Trimethybenzene	290	41.04	145	NA	NA	NA	72	Yes
Bromomethane	2	NA	2	NA	NA	NA	15	No. Only one detection during sampling round. Also, the detection does not exceed calculated risk value (HI=1).
Carbon Tetrachloride	1.85	1.025	1.12	1.6	16	160	38	No. Representative site concentration does not exceed calculated risk value (ILCR=10-5 and HI=1).
Chloroform	7	0.694	1.3	4	40	400	105	No. Representative site concentration does not exceed calculated risk value (ILCR=10-5 and HI=1).
Chloromethane	16	3.682	5.13	10	100	1000	NA	No. Representative site concentration does not exceed calculated risk value (ILCR=10-5).
Ethylbenzene	58	8.748	29.4	8.3	83	830	789	Yes
Tetrachloroethene	12	1.706	2.98	0.17	1.7	17	79.0	Yes
Trichloroethene	1200	200.8	109	20	200	2000	NA	Yes
Vinyl Chloride	19	1.429	2.27	0.08	0.8	8	32	Yes
Benzo(k)fluoranthene	4	NA	4	0.034	0.34	3.4	NA	No. Only one detection during sampling round. Also, the detection is similar to a value representing ILCR = 10-4.
Dieldrin	0.0108	NA	0.0108	0.005	0.05	0.5	0.38	No. Representative site concentration does not exceed calculated risk value (ILCR=10-5).
Aluminum	564,000	201311	29100	NA	NA	NA	11121	No - toxicity is uncertain
Antimony	1.2	NA	1.2	NA	NA	NA	4.3	No. Only one detection during sampling round. Also, the detection does not exceed calculated risk value (HI=1).
Arsenic	503	123.7	34.8	0.09	0.9	9	3.3	Yes (Note 5).
Barium	1390	339.3	72	NA	NA	NA	2094	No. Representative site concentration does not exceed calculated risk value (HI=1).
Beryllium	17.8	8.663	9.04	NA	NA	NA	13	No. Representative site concentration does not exceed calculated risk value (HI=1).
Chromium	868	212.3	101	0.036	0.36	3.6	24	Yes (Note 3).
Cobalt	637	155	59.8	NA	NA	NA	3.3	Yes
Copper	1440	530.4	166	NA	NA	NA	445	No - Average concentration does not exceed risk criteria
Iron	1,210,000	434784	52200	NA	NA	NA	7785	No - source and toxicity is uncertain
Lead	1890	449.8	128	15				Yes (Note 6).
Manganese	13,800	4023	1850	NA	NA	NA	240	Yes (Note 5).
Nickel	1160	415.4	60.6	NA	NA	NA	218	Yes (Note 6).
Thallium	2.3	NA	2.3	NA	NA	NA	0.72	No. Only one detection during sampling round. A representative site-wide concentration (considering nondetects) would not exceed the calculated risk value (HI=1).
Vanadium	832	321.7	169	NA	NA	NA	47	Yes (Note 6).
Zinc	3990	527.5	285	NA	NA	NA	3343	No. Representative site concentration does not exceed calculated risk value (HI=1).

TABLE 6-1
REFINEMENT OF CHEMICALS OF CONCERN IN GROUNDWATER (HUMAN HEALTH)
SITE 08, NUSC DISPOSAL AREA
SUPPLEMENTAL REMEDIAL INVESTIGATION REPORT
NAVAL STATION NEWPORT, NEWPORT RI

Constituent	Site Data (µg/L)[1]			Target Risk Level				Chemical to be Forwarded as a COC to the FS?
	Maximum Detected Concentration [1]	95% UCL [2]	Average Concentration [2]	Incremental Cancer Risk of $1x10^{-6}$ (µg/L)	Incremental Cancer Risk of $1x10^{-5}$ (µg/L)	Incremental Cancer Risk of $1x10^{-4}$ (µg/L)	Hazard Index = 1 (µg/L)	
HYPOTHETICAL ADULT RESIDENTS								
1,1-Dichloroethane	1000	154.5	80.8	17	170	1700	6765	Yes
1,3,5,-Trimethybenzene	290	41.04	145	NA	NA	NA	200	No. Representative site concentration does not exceed calculated risk value (HI=1).
Bromomethane	2	NA	2	NA	NA	NA	49	No. Only one detection during sampling round. Also, the detection does not exceed calculated risk value (HI=1).
Carbon Tetrachloride	1.85	1.025	1.12	1.2	12	120	115	No. Representative site concentration does not exceed calculated risk value (ILCR=10-5 and HI=1).
Chloroform	7	0.694	1.3	3.2	32	320	334	No. Representative site concentration does not exceed calculated risk value (ILCR=10-5 and HI=1).
Chloromethane	16	3.682	5.13	NA	NA	NA	NA	Yes
Ethylbenzene	58	8.748	29.4	6	60	600	2275	Yes
Tetrachloroethene	12	1.706	2.98	0.12	1.2	12	228	Yes
Trichloroethene	1200	200.8	109	15	150	1500	NA	Yes
Vinyl Chloride	19	1.429	2.27	0.07	0.7	7	104	Yes
Benzo(k)fluoranthene	4	NA	4	0.08	0.8	8	NA	No. Only one detection during sampling round. A representative site-wide concentration (considering nondetects) would not exceed the calculated risk value (ILCR=10-5).
Dieldrin	0.0108	NA	0.0108	0.004	0.04	0.4	NA	No. Only one detection during sampling round. A representative site-wide concentration (considering nondetects) would not exceed the calculated risk value (ILCR=10-5).
Aluminum	564,000	201311	29100	NA	NA	NA	1.1	No - toxicity is uncertain
Arsenic	503	123.7	34.8	0.07	0.7	7	36310	Yes (Note 5).
Barium	1390	339.3	72	NA	NA	NA	6793	No. Representative site concentration does not exceed calculated risk value (HI=1).
Beryllium	17.8	8.663	9.04	NA	NA	NA	42	No. Representative site concentration does not exceed calculated risk value (HI=1).
Chromium	868	212.3	101	0.15	1.5	15	77	Yes (Note 3).
Cobalt	637	155	59.8	NA	NA	NA	11	Yes
Copper	1440	530.4	166	NA	NA	NA	1452	No. Representative site concentration does not exceed calculated risk value (HI=1).
Iron	1,210,000	434784	52200	NA	NA	NA	25417	No - source and toxicity is uncertain
Lead	1890	449.8	128	15				Yes (Note 6).
Manganese	13,800	4023	1850	NA	NA	NA	775	Yes (Note 5).
Nickel	1160	415.4	60.6	NA	NA	NA	711	No. Representative site concentration does not exceed calculated risk value (HI=1).
Thallium	2.3	NA	2.3	NA	NA	NA	2.4	No. Only one detection during sampling round, and the detection is less than the calculated risk value (HI=1).
Vanadium	832	321.7	169	NA	NA	NA	152	Yes (Note 6).
Zinc	3990	527.5	285	NA	NA	NA	10916	No. Representative site concentration does not exceed calculated risk value (HI=1).

TABLE 6-1
REFINEMENT OF CHEMICALS OF CONCERN IN GROUNDWATER (HUMAN HEALTH)
SITE 08, NUSC DISPOSAL AREA
SUPPLEMENTAL REMEDIAL INVESTIGATION REPORT
NAVAL STATION NEWPORT, NEWPORT RI

Constituent	Site Data (µg/L)[1]			Target Risk Level				Chemical to be Forwarded as a COC to the FS?
	Maximum Detected Concentration [1]	95% UCL [2]	Average Concentration [2]	Incremental Cancer Risk of $1x10^{-6}$ (µg/L)	Incremental Cancer Risk of $1x10^{-5}$ (µg/L)	Incremental Cancer Risk of $1x10^{-4}$ (µg/L)	Hazard Index = 1 (µg/L)	
HYPOTHETICAL LIFELONG RESIDENTS								
1,1-Dichloroethane	1000	154.5	80.8	9.6	96	960	NA	Yes
Carbon Tetrachloride	1.85	1.025	1.12	0.67	6.7	67	NA	Yes
Chloroform	7	0.694	1.3	1.8	18	180	NA	No. Representative site concentration does not exceed calculated risk value (ILCR=10-5).
Chloromethane	16	3.682	5.13	NA	NA	NA	NA	Yes
Ethylbenzene	58	8.748	29.4	3.5	35	350	NA	Yes
Tetrachloroethene	12	1.706	2.98	0.07	0.7	7	NA	Yes
Trichloroethene	1200	200.8	109	8.7	87	870	NA	Yes
Vinyl Chloride	19	1.429	2.27	0.04	0.4	4	NA	Yes
Benzo(k)fluoranthene	4	NA	4	0.24	2.4	24	NA	No. Only one detection during sampling round. Also, the detection is less than a value representing ILCR=10-4.
Dieldrin	0.0108	NA	0.0108	0.002	0.02	0.2	NA	No. Only one detection during sampling round. A representative site-wide concentration (considering nondetects) would not exceed the calculated risk value (ILCR=10-5).
Arsenic	503	123.7	34.8	0.04	0.4	4	NA	Yes (Note 5).
Lead	1890	449.8	128	15				Yes (Note 6).
CONSTRUCTION WORKERS								
Aluminum	564,000	201311	29100	NA	NA	NA	2,572,493	No. Toxicity is uncertain, and a representative site concentration does not exceed calculated risk value (HI=1).
Beryllium	17.8	8.663	9.04	NA	NA	NA	103	No. Representative site concentration does not exceed calculated risk value (HI=1).
Chromium	868	212.3	101	13	130	1300	273	Yes (Note 3).
Iron	1,210,000	434784	52200	NA	NA	NA	1,800,745	No. Toxicity is uncertain, and a representative site concentration does not exceed calculated risk value (HI=1).
Manganese	13,800	4023	1850	NA	NA	NA	6,644	No. Representative site concentration does not exceed calculated risk value (HI=1).
New COCs identified from the SRI								
1,4-Dioxane	8.3	1.832	2.25	NC	NC	NC	NC	Yes - See Section 6.4
1,1,1-Trichoroethane	1600	NC	NC	NC	NC	NC	NC	Yes - See Section 6.4
1,1-Dichloroethene	79	NC	NC	NC	NC	NC	NC	Yes - See Section 6.4

Notes:
1 - Maximum concentrations include groundwater data from the RI and SRI.
2 - 95% UCL and average values are calculated using a single (most recent) sample result from each monitoring well, combining the RI data and SRI data. Non-detect values were not considered.
3 - Chromium is being retained as a COC because, for conservative risk assessment purposes, the Chromium is assumed to be Cr^{+6}. Additional sampling may be conducted to determine the actual speciation of chromium at the Site (may be dropped as a COC if found to be present as trivalent chromium, Cr+3).
4 - "NA" = Not applicable; "NC" = Not Calculated
5 - Retained as a COC although it is believed to be associated with a “secondary release” resulting from the mobilization of naturally occurring arsenic and manganese in soil to groundwater, due to the reducing conditions resulting from the primary release of contaminants to the subsurface.
6 - Based on unfiltered sample data. If filtered metals had been used to calculate risks from residential exposures to groundwater then lead, nickel, and vanadium would not have been retained as COCs.

TABLE 6-2
REFINEMENT OF CHEMICALS OF CONCERN IN SOIL (HUMAN HEALTH)
SITE 08, NUSC DISPOSAL AREA
SUPPLEMENTAL REMEDIAL INVESTIGATION REPORT
NAVAL STATION NEWPORT, NEWPORT RI

Constituent	Site Data (mg/kg) [1]			Target Risk Level				Background[2]				Chemical to be Forwarded as a COC to the FS?
	Maximum Detected Concentration	95% UCL	Average Concentration	Incremental Cancer Risk of $1x10^{-6}$ (mg/kg)	Incremental Cancer Risk of $1x10^{-5}$ (mg/kg)	Incremental Cancer Risk of $1x10^{-4}$ (mg/kg)	Hazard Index = 1 (mg/kg)	Maximum Detected Concentration (mg/kg)	95% UCL for PmB soil (mg/kg)	95% UCL for Se Soil (mg/kg)	Site Concentration> Background Concentration? (mg/kg)	
CONSTRUCTION WORKERS												
Benzo(a)anthracene	1,900	92.862	25.8	41	410	4,100	NA	0.079	0.066	0.079	Y	No. The representative site concentration is below the calculated risk value (ILCR=10-5).
Benzo(a)pyrene	1,500	74.598	21.5	4.1	41	410	NA	0.095	0.078	0.095	Y	Yes
Benzo(b)fluoranthene	1,300	64.554	19.3	41	410	4,100	NA	0.130	0.120	0.130	Y	No. The representative site concentration is below the calculated risk value (ILCR=10-5).
Dibenzo(a,h)anthracene	330	16.157	6.5	4.1	41	410	NA	ND	ND	ND	Y	No. The representative site concentration is below the calculated risk value (ILCR=10-5).
Indeno(1,2,3-cd)pyrene	850	42.428	13.3	41	410	4,100	NA	0.098	0.060	0.098	Y	No. The representative site concentration is below the calculated risk value (ILCR=10-5).
INDUSTRIAL WORKERS												
Benzo(a)anthracene	1,900	92.862	25.8	2.1	21	210	NA	0.079	0.066	0.079	Y	Yes
Benzo(a)pyrene	1,500	74.598	21.5	0.21	2.1	21	NA	0.095	0.078	0.095	Y	Yes
Benzo(b)fluoranthene	1,300	64.554	19.3	2.1	21	210	NA	0.130	0.120	0.130	Y	Yes
Benzo(k)fluoranthene	1,200	61.064	17.6	21	210	2,100	NA	0.110	0.069	0.110	Y	No. The representative site concentration is below the calculated risk value (ILCR=10-5).
Chrysene	1,700	82.646	22.8	211	2,110	21,100	NA	0.140	0.090	0.140	Y	No. The representative site concentration is below the calculated risk value (ILCR=10-5).
Dibenzo(a,h)anthracene	330	16.157	6.5	0.21	2.1	21	NA	ND	ND	ND	Y	Yes
Indeno(1,2,3-cd)pyrene	850	42.428	13.3	2.1	21	210	NA	0.098	0.060	0.098	Y	Yes
Arsenic	122	17.87	16.4	1.6	16	160	256	71.7	49.8	23.2	Y	No. The representative site concentration is consistent with the calculated risk value (ILCR=10-5) and background.
ADOLESCENT TRESPASSERS												
Benzo(a)anthracene	1,900	92.862	25.8	3.3	33	330	NA	0.079	0.066	0.079	Y	Yes
Benzo(a)pyrene	1,500	74.598	21.5	0.33	3.3	33	NA	0.095	0.078	0.095	Y	Yes
Benzo(b)fluoranthene	1,300	64.554	19.3	3.3	33	330	NA	0.130	0.120	0.130	Y	Yes
Benzo(k)fluoranthene	1,200	61.064	17.6	33	330	3,300	NA	0.110	0.069	0.110	Y	No. The representative site concentration is below the calculated risk value (ILCR=10-5).
Dibenzo(a,h)anthracene	330	16.157	6.5	0.33	3.3	33	NA	ND	ND	ND	Y	Yes
Indeno(1,2,3-cd)pyrene	850	42.428	13.3	10	100	1,000	NA	0.098	0.060	0.098	Y	No. The representative site concentration is below the calculated risk value (ILCR=10-5).
Arsenic	122	17.87	16.4	1.6	16	160	768	71.7	49.8	23.2	Y	No. The representative site concentration is consistent with the calculated risk value (ILCR=10-5) and background.
CHILD RECREATIONAL USERS												
Benzo(a)anthracene	1,900	92.862	25.8	1.3	13	130	NA	0.079	0.066	0.079	Y	Yes
Benzo(a)pyrene	1,500	74.598	21.5	0.13	1.3	13	NA	0.095	0.078	0.095	Y	Yes
Benzo(b)fluoranthene	1,300	64.554	19.3	1.3	13	130	NA	0.130	0.120	0.130	Y	Yes
Benzo(k)fluoranthene	1,200	61.064	17.6	13	130	1,300	NA	0.110	0.069	0.110	Y	No. The representative site concentration is below the calculated risk value (ILCR=10-5).
Chrysene	1,700	82.646	22.8	125	1,250	12,500	NA	0.140	0.090	0.140	Y	No. The representative site concentration is below the calculated risk value (ILCR=10-5).
Dibenzo(a,h)anthracene	330	16.157	6.5	0.13	1.3	13	NA	ND	ND	ND	Y	Yes
Indeno(1,2,3-cd)pyrene	850	42.428	13.3	1.3	13	130	NA	0.098	0.060	0.098	Y	Yes
Arsenic	122	17.87	16.4	4.1	41	410	158	71.7	49.8	23.2	Y	No. The representative site concentration is below the calculated risk value (ILCR=10-5) and is consistent with background.

TABLE 6-2
REFINEMENT OF CHEMICALS OF CONCERN IN SOIL (HUMAN HEALTH)
SITE 08, NUSC DISPOSAL AREA
SUPPLEMENTAL REMEDIAL INVESTIGATION REPORT
NAVAL STATION NEWPORT, NEWPORT RI

Constituent	Site Data (mg/kg) [1]			Target Risk Level				Background[2]				Chemical to be Forwarded as a COC to the FS?
	Maximum Detected Concentration	95% UCL	Average Concentration	Incremental Cancer Risk of $1x10^{-6}$ (mg/kg)	Incremental Cancer Risk of $1x10^{-5}$ (mg/kg)	Incremental Cancer Risk of $1x10^{-4}$ (mg/kg)	Hazard Index = 1 (mg/kg)	Maximum Detected Concentration (mg/kg)	95% UCL for PmB soil (mg/kg)	95% UCL for Se Soil (mg/kg)	Site Concentration> Background Concentration? (mg/kg)	
ADULT RECREATIONAL USERS												
Benzo(a)anthracene	1,900	92.862	25.8	7.6	76	760	NA	0.079	0.066	0.079	Y	Yes
Benzo(a)pyrene	1,500	74.598	21.5	0.76	7.6	76	NA	0.095	0.078	0.095	Y	Yes
Benzo(b)fluoranthene	1,300	64.554	19.3	7.6	76	760	NA	0.130	0.120	0.130	Y	No. The representative site concentration is below the calculated risk value (ILCR=10-5).
Benzo(k)fluoranthene	1,200	61.064	17.6	76	760	7,600	NA	0.110	0.069	0.110	Y	No. The representative site concentration is below the calculated risk value (ILCR=10-5).
Dibenzo(a,h)anthracene	330	16.157	6.5	0.76	7.6	76	NA	ND	ND	ND	Y	Yes
Indeno(1,2,3-cd)pyrene	850	42.428	13.3	7.6	76	760	NA	0.098	0.060	0.098	Y	No. The representative site concentration is below the calculated risk value (ILCR=10-5).
Arsenic	122	17.87	16.4	9.2	92	920	1,426	71.7	49.8	23.2	Y	No. The representative site concentration is below the calculated risk value (ILCR=10-5) and is consistent with background.
LIFELONG RECREATIONAL USERS												
Benzo(a)anthracene	1,900	92.862	25.8	1.1	11	110	NA	0.079	0.066	0.079	Y	Yes
Benzo(a)pyrene	1,500	74.598	21.5	0.11	1.1	11	NA	0.095	0.078	0.095	Y	Yes
Benzo(b)fluoranthene	1,300	64.554	19.3	1.1	11	110	NA	0.130	0.120	0.130	Y	Yes
Benzo(k)fluoranthene	1,200	61.064	17.6	11	110	1,100	NA	0.110	0.069	0.110	Y	No. The representative site concentration is below the calculated risk value (ILCR=10-5).
Chrysene	1,700	82.646	22.8	108	1,080	10,800	NA	0.140	0.090	0.140	Y	No. The representative site concentration is below the calculated risk value (ILCR=10-5).
Dibenzo(a,h)anthracene	330	16.157	6.5	0.11	1.1	11	NA	ND	ND	ND	Y	Yes
Indeno(1,2,3-cd)pyrene	850	42.428	13.3	1.1	11	110	NA	0.098	0.060	0.098	Y	Yes
Arsenic	122	17.87	16.4	2.8	28	280	NA	71.7	49.8	23.2	Y	No. The representative site concentration is below the calculated risk value (ILCR=10-5) and is consistent with background.
HYPOTHETICAL CHILD RESIDENTS												
Benzo(a)anthracene	1,900	92.862	25.8	0.170	1.7	17	NA	0.079	0.066	0.079	Y	Yes
Benzo(a)pyrene	1,500	74.598	21.5	0.017	0.17	1.7	NA	0.095	0.078	0.095	Y	Yes
Benzo(b)fluoranthene	1,300	64.554	19.3	0.170	1.7	17	NA	0.130	0.120	0.130	Y	Yes
Benzo(k)fluoranthene	1,200	61.064	17.6	1.7	17	170	NA	0.110	0.069	0.110	Y	Yes
Chrysene	1,700	82.646	22.8	17	170	1,700	NA	0.140	0.090	0.140	Y	No. The representative site concentration is below the calculated risk value (ILCR=10-5).
Dibenzo(a,h)anthracene	330	16.157	6.5	0.017	0.17	1.7	NA	ND	ND	ND	Y	Yes
Indeno(1,2,3-cd)pyrene	850	42.428	13.3	0.170	1.7	17	NA	0.098	0.060	0.098	Y	Yes
Total Aroclors	5.22	0.2083	0.447	0.328	3.28	32.8	NA	0.086	0.086	0.034	Y	No. The representative site concentration is below the calculated risk value (ILCR=10-5).
Arsenic	122	17.87	16.4	0.560	5.6	56	22	71.7	49.8	23.2	Y	Yes
HYPOTHETICAL ADULT RESIDENTS												
Benzo(a)anthracene	1,900	92.862	25.8	1	10	100	NA	0.079	0.066	0.079	Y	Yes
Benzo(a)pyrene	1,500	74.598	21.5	0.1	1	10	NA	0.095	0.078	0.095	Y	Yes
Benzo(b)fluoranthene	1,300	64.554	19.3	1	10	100	NA	0.130	0.120	0.130	Y	Yes
Benzo(k)fluoranthene	1,200	61.064	17.6	10	100	1,000	NA	0.110	0.069	0.110	Y	No. The representative site concentration is below the calculated risk value (ILCR=10-5).
Chrysene	1,700	82.646	22.8	105	1,050	10,500	NA	0.140	0.090	0.140	Y	No. The representative site concentration is below the calculated risk value (ILCR=10-5).
Dibenzo(a,h)anthracene	330	16.157	6.5	0.1	1	10	NA	ND	ND	ND	Y	Yes
Indeno(1,2,3-cd)pyrene	850	42.428	13.3	1	10	100	NA	0.098	0.060	0.098	Y	Yes
Naphthalene	220	10.885	5.31	11	110	1100	9,600	ND	ND	ND	Y	No. The representative site concentration is below the calculated risk value (ILCR=10-5).
Total Aroclors	5.22	0.2083	0.447	0.68	6.8	68	NA	0.086	0.086	0.034	Y	No. The representative site concentration is below the calculated risk value (ILCR=10-5).
Arsenic	122	17.87	16.4	1.3	13	130	195	71.7	49.8	23.2	Y	Yes

TABLE 6-2
REFINEMENT OF CHEMICALS OF CONCERN IN SOIL (HUMAN HEALTH)
SITE 08, NUSC DISPOSAL AREA
SUPPLEMENTAL REMEDIAL INVESTIGATION REPORT
NAVAL STATION NEWPORT, NEWPORT RI

Constituent	Site Data (mg/kg) [1]			Target Risk Level				Background [2]				Chemical to be Forwarded as a COC to the FS?
	Maximum Detected Concentration	95% UCL	Average Concentration	Incremental Cancer Risk of $1x10^{-6}$ (mg/kg)	Incremental Cancer Risk of $1x10^{-5}$ (mg/kg)	Incremental Cancer Risk of $1x10^{-4}$ (mg/kg)	Hazard Index = 1 (mg/kg)	Maximum Detected Concentration (mg/kg)	95% UCL for PmB soil (mg/kg)	95% UCL for Se Soil (mg/kg)	Site Concentration> Background Concentration? (mg/kg)	
HYPOTHETICAL LIFELONG RESIDENTS												
Benzo(a)anthracene	1,900	92.862	25.8	0.150	1.5	15	NA	0.079	0.066	0.079	Y	Yes
Benzo(a)pyrene	1,500	74.598	21.5	0.015	0.15	1.5	NA	0.095	0.078	0.095	Y	Yes
Benzo(b)fluoranthene	1,300	64.554	19.3	0.150	1.5	15	NA	0.130	0.120	0.130	Y	Yes
Benzo(k)fluoranthene	1,200	61.064	17.6	1.5	15	150	NA	0.110	0.069	0.110	Y	Yes
Chrysene	1,700	82.646	22.8	15	150	1,500	NA	0.140	0.090	0.140	Y	No. The representative site concentration is below the calculated risk value (ILCR=10-5).
Dibenzo(a,h)anthracene	330	16.157	6.5	0.015	0.15	1.5	NA	ND	ND	ND	Y	Yes
Indeno(1,2,3-cd)pyrene	850	42.428	13.3	0.150	1.5	15	NA	0.098	0.060	0.098	Y	Yes
Naphthalene	220	10.885	5.31	9.3	93	930	NA	ND	ND	ND	Y	No. The representative site concentration is below the calculated risk value (ILCR=10-5).
Total Aroclors	5.22	0.2083	0.447	0.221	2.21	22.1	NA	0.086	0.086	0.034	Y	No. The representative site concentration is below the calculated risk value (ILCR=10-5).
Arsenic	122	17.87	16.4	0.40	4	40	NA	71.7	21	69.3	Y	Yes

NOTES:
1 - Site maximum, 95% UCL and average values are derived from a combined data set using RI and SRI data.
2 - Background data includes soil background data from the NUSC background data report (Tetra Tech, 2006)
3 - Total Aroclors in background are represented by Aroclor-1260, detected in 22 of 60 background samples.
4 - The maximum site concentration exceeds the maximum background concentration, but the average site concentration does not exceed the average background concentration

Soil site and background values are the average of detected values, and does not use half non-detect values.

TABLE 6-3
REFINEMENT OF CHEMICALS OF CONCERN IN SEDIMENT (HUMAN HEALTH)
SITE 08, NUSC DISPOSAL AREA
SUPPLEMTENTAL REMEDIAL INVESTIGATION REPORT
NAVAL STATION NEWPORT, NEWPORT RI

Constituent	Site Data (mg/kg) [1]			Target Risk Level				Background[2]			Chemical to be Forwarded as a COC to the FS?
	Maximum Detected Concentration	95% UCL	Average Concentration	Incremental Cancer Risk of $1x10^{-6}$ (mg/kg)	Incremental Cancer Risk of $1x10^{-5}$ (mg/kg)	Incremental Cancer Risk of $1x10^{-4}$ (mg/kg)	Hazard Index = 1 (mg/kg)	Maximum Detected Concentration (mg/kg)	95% UCL (mg/kg)	Site Concentration> Background Concentration?[1] (mg/kg)	
CHILD RECREATIONAL USERS											
Benzo(a)pyrene	2.6	1.044	0.51	0.13	1.3	13	NA	2.5	2.5	No	No - site data is similar or below background
Arsenic	18	15.04	14	4.1	41	410	160	35.5	34.0	No	No - site data is below background
LIFELONG RECREATIONAL USERS											
Benzo(a)pyrene	2.6	1.044	0.51	0.11	1.1	11	NA	2.5	2.5	No	No - site data is similar or below background
Arsenic	18	15.04	14	2.8	28	280	NA	35.5	34.0	No	No - site data is below background

NOTES:
1 - Site maximum, 95% UCL and average values are derived from a combined data set using RI and SRI data.
2. Site-specific background sediment data are from Tetra Tech, 2006. Anthropogenic background concentrations of organics are considered.

TABLE 6-4
REFINEMENT OF CHEMICALS OF CONCERN IN FISH TISSUE (HUMAN HEALTH)
SITE 08, NUSC DISPOSAL AREA
SUPPLEMENTAL REMEDIAL INVESTIGATION REPORT
NAVAL STATION NEWPORT, NEWPORT RI

Constituent	Site Data (mg/kg) [1]			Target Risk Level				Background[4]			Chemical to be Forwarded as a COC to the FS?
	Maximum Detected Concentration	95% UCL	Average Concentration	Incremental Cancer Risk of $1x10^{-6}$ (mg/kg)	Incremental Cancer Risk of $1x10^{-5}$ (mg/kg)	Incremental Cancer Risk of $1x10^{-4}$ (mg/kg)	Hazard Index = 1 (mg/kg)	Maximum Detected Concentration (mg/kg)	Average Concentration (mg/kg)	Site Concentration> Background Concentration?[1] (mg/kg)	
CHILD RECREATIONAL USERS											
4,4'-DDE	0.652	0.649	0.312	0.124	1.24	12.4	NA	0.303	0.172	**Y**	No - See Note 2
Dieldrin	0.040	0.039	0.015	0.0026	0.026	0.26	0.18	0.012	0.006	**Y**	No - See Note 2
Total Aroclors	0.654	0.608	0.287	0.021	0.21	2.1	NA	0.357	0.187	**Y**	No - See Note 3
ADULT RECREATIONAL USERS											
4,4'-DDE	0.652	0.649	0.312	0.048	0.48	4.8	NA	0.303	0.172	**Y**	No - See Note 2
Aldrin	0.002	0.002	0.001	0.001	0.01	0.1	0.17	ND	ND	**Y**	No - See Note 2
Dieldrin	0.040	0.039	0.015	0.001	0.01	0.1	0.28	0.012	0.006	**Y**	No - See Note 2
Total Aroclors	0.654	0.608	0.287	0.008	0.08	0.8	NA	0.357	0.187	**Y**	No - See Note 3
LIFELONG RECREATIONAL USERS											
4,4'-DDE	0.652	0.649	0.312	0.035	0.35	3.5	NA	0.303	0.172	**Y**	No - See Note 2
Aldrin	0.002	0.002	0.001	0.0007	0.007	0.07	NA	ND	ND	**Y**	No - See Note 2
Dieldrin	0.040	0.039	0.015	0.0007	0.007	0.07	NA	0.012	0.006	**Y**	No - See Note 2
Total Aroclors	0.654	0.608	0.287	0.006	0.06	0.6	NA	0.357	0.187	**Y**	No - See Note 3

Notes:
1 - Site maximum, 95% UCL and average values are derived from a combined data set using RI and SRI data.
2 - Site maximum values are similar to or below screening values and therefore do not significantly contribute to total site risks.
Also, the data distribution does not suggest disposal or releases of pesticides at the site other than normal past use at and upgradient of the site.
3 - Site maximum values are similar to or below screening values and therefore do not significantly contribute to total site risks. Also was not selected as a COC for sediment.
4 - Background fish tissue samples were taken in Melville Ponds Area.

Concentrations cited are dry-weight results only.

TABLE 6-5
REFINEMENT OF CHEMICALS OF CONCERN IN SEDIMENT (ECOLOGICAL)
SITE 08, NUSC DISPOSAL AREA
SUPPLEMENTAL REMEDIAL INVESTIGATION REPORT
NAVAL STATION NEWPORT, NEWPORT RI

Constituent	Site Data		Pond Invertebrates		Stream Invertebrates		Reference Pond/Stream			Background[3]			Chemical to be Forwarded as a COC to the FS?
	Maximum Detected Concentration	Average Concentration	NOEC	LOEC	NOEC	LOEC	Maximum Detected Concentration	Average Concentration	Site Concentration> Reference Concentration?[1]	Maximum Detected Concentration	Average Concentration	Site Concentration> Background Concentration?[1]	
SEDIMENT													
Organics (µg/kg)													
Total DDx	667	104	55.6	250	NA	NA	56	19.9	Yes	395	175	No	No. Site concentrations are similar to and/or below background. No indication of a CERCLA release.
Alpha Chlordane[2]	180	28.8	NA	NA	NA	NA	NZ	NZ	Yes	110	40.2	No	
Gamma Chlordane[2]	130	21.2	NA	NA	NA	NA	NZ	NZ	Yes	87	27.9	No	
Total Chlordane	NA	NA	ND	123	NA	NA	NA	NA	NA	NA	NA	NA	No: See above for alpha and gamma chlordanes.
Total Aroclors	2930	214	ND	150	220	370	NZ	NZ	Yes	89	51.2	Yes	Yes
HMW PAHs	33640	6400	1676	7790	6240	7290	6240	2920	Yes	28120	11500	No	No. Site concentrations are similar to and/or below background. No indication of a CERCLA release.
Total PAHs	45560	7750	1769	8789	6962	8110	6962	3210	Yes	30269	12600	No	
Metals (mg/kg)													
Lead	27200	1410	NA	NA	543	562	74	29.4	Yes	297	91.9	Yes	Yes
SOIL													
Constituent	**Site Samples**		**Soil Invertebrates**							**Background[4]**			
	Maximum	**Average**	**NOAEL**	**LOAEL**						Max Background	Avg Background	Site>Background?	
Metals (mg/kg)													
Cadmium	11	1.18	0.22	1.11						0.15[5]	0.05[5]	Yes	Yes
Chromium	103	16.5	3.76	22.12						28.2	12.7	Yes	Yes
Selenium	1.9	0.787	0.24	0.82						0.73 [5]	0.37 [5]	No	No. Site concentrations are similar to and/or below background.

NA - Not available/Not Applicable
NZ - Not Analyzed or Not Detected

HMW PAHs - High Molecular Weight Polycyclic Aromatic Hydrocarbons (see text)
1 - Background comparisons were presented in the RI Report (Tetra Tech 2010a).
2 - Alpha and gamma chlordane concentrations are presented because total chlordane was not calculated for the reference and background samples.
3 - Background Sediment is Hydric "Se" soil type from Background Soil Investigation for the NUSC Disposal Area.
4 - "Se" soil type unless otherwise noted (background soil investigation for NUSC Disposal area)
5 - Basewide background Investigation Report (Tetra Tech, 2008)

TABLE 6-6
SUMMARY OF COCs RETAINED FOR THE FS
SITE 08 - NUSC DISPOSAL AREA
SUPPLEMENTAL REMEDIAL INVESTIGATION REPORT
NAVAL STATION NEWPORT, NEWPORT RI

Medium	COPC	Human Health Receptors	Ecological Receptors	Maximum Concentration (a)	Units
Soil	Benzo(a)anthracene	1,2,3,5,6,7,8,9	--	1,900	mg/kg
	Benzo(a)pyrene	1,2,3,4,5,6,7,8,9	--	1,500	mg/kg
	Benzo(b)fluoranthene	1,2,3,5,6,7,9	--	1,300	mg/kg
	Benzo(k)fluoranthene	1,3	--	1,200	mg/kg
	Dibenzo(a,h)anthracene	1,2,3,5,6,7,8,9	--	330	mg/kg
	Indeno(1,2,3-cd)pyrene	1,2,3,5,7,8,9	--	850	mg/kg
	Arsenic (b)	1,2,3	--	122	mg/kg
	Cadmium	--	12	2.4 J	mg/kg
	Chromium	--	12	28.8	mg/kg
Groundwater	1,1,1-Trichloroethane	Not Quantified	--	1,600	ug/L
	1,1-Dichloroethane	1,2,3	--	1,000	µg/L
	1,1-Dichloroethene	Not Quantified	--	79	ug/L
	1,3,5-Trimethybenzene	1	--	290	µg/L
	1,4-Dioxane	Not Quantified	--	8.3	µg/L
	Carbon Tetrachloride	3	--	1.85	µg/L
	Chloromethane	2,3	--	16	µg/L
	Ethylbenzene	1,2,3	--	58	µg/L
	Tetrachloroethene	1,2,3	--	12	µg/L
	Trichloroethene	1,2,3	--	1,200	µg/L
	Vinyl Chloride	1,2,3	--	19	µg/L
	Arsenic (f)	1,2,3	--	503	µg/L
	Chromium (d)	1,2,4	--	868	µg/L
	Cobalt	1,2	--	637	µg/L
	Lead (e)	1,2,3	--	1,890	µg/L
	Manganese (f)	1,2	--	13,800	µg/L
	Nickel (e)	1	--	1,160	µg/L
	Vanadium (e)	1,2	--	832	µg/L
Sediment (c)	Total Aroclors	--	11	2.93	mg/kg
	Lead	--	11	27,200	mg/kg

(a) Maximum Concentrations are presented for illustrative purposes

(b) For type PmB surface and subsurface soil (North Meadow) and type Se surface soil (remainder of site).

(c) Alternatively, a Probable Effects Concentration Quotient (PEC-Q) approach may be considered in the FS.

(d) Pending sampling to determine whether present as Cr+6 or Cr+3 (the latter may not be identified as a COC).

(e) Based on unfiltered sample data. If filtered metals had been used to calculate risks from residential exposures to groundwater then lead, nickel, and vanadium would not have been retained as COCs.

(f) Arsenic and manganese are associated with a secondary release to groundwater.

Receptors:

1 Hypothetical Child Residents
2 Hypothetical Adult Residents
3 Hypothetical Lifelong Residents
4 Construction Workers
5 Industrial Workers
6 Adolescent Trespassers
7 Child Recreational Users
8 Adult Recreational Users
9 Lifelong Recreational Users
10 Ecological - Pond Invertebrates
11 Ecological - Stream Invertebrates
12 Ecological - Soil Invertebrates

FIGURES

ACAD:I:\02124\FS.DF\NUSC_SITE_LOC.DWG 5/9/11 DWM

TETRA TECH

NUSC DISPOSAL AREA SITE LOCATION
SITE 08, NUSC DISPOSAL AREA
SUPPLEMENTAL REMEDIAL INVESTIGATION
NAVAL STATION NEWPORT, RHODE ISLAND

SCALE	AS NOTED
FILE	\..\NUSC_SITE_LOC.DWG
REV	0
DATE	5/9/11
FIGURE NUMBER	1–1

ACAD: I: \02124\FS.DF\NUSC_SAMP_LOCS.DWG 5/10/11 DWM

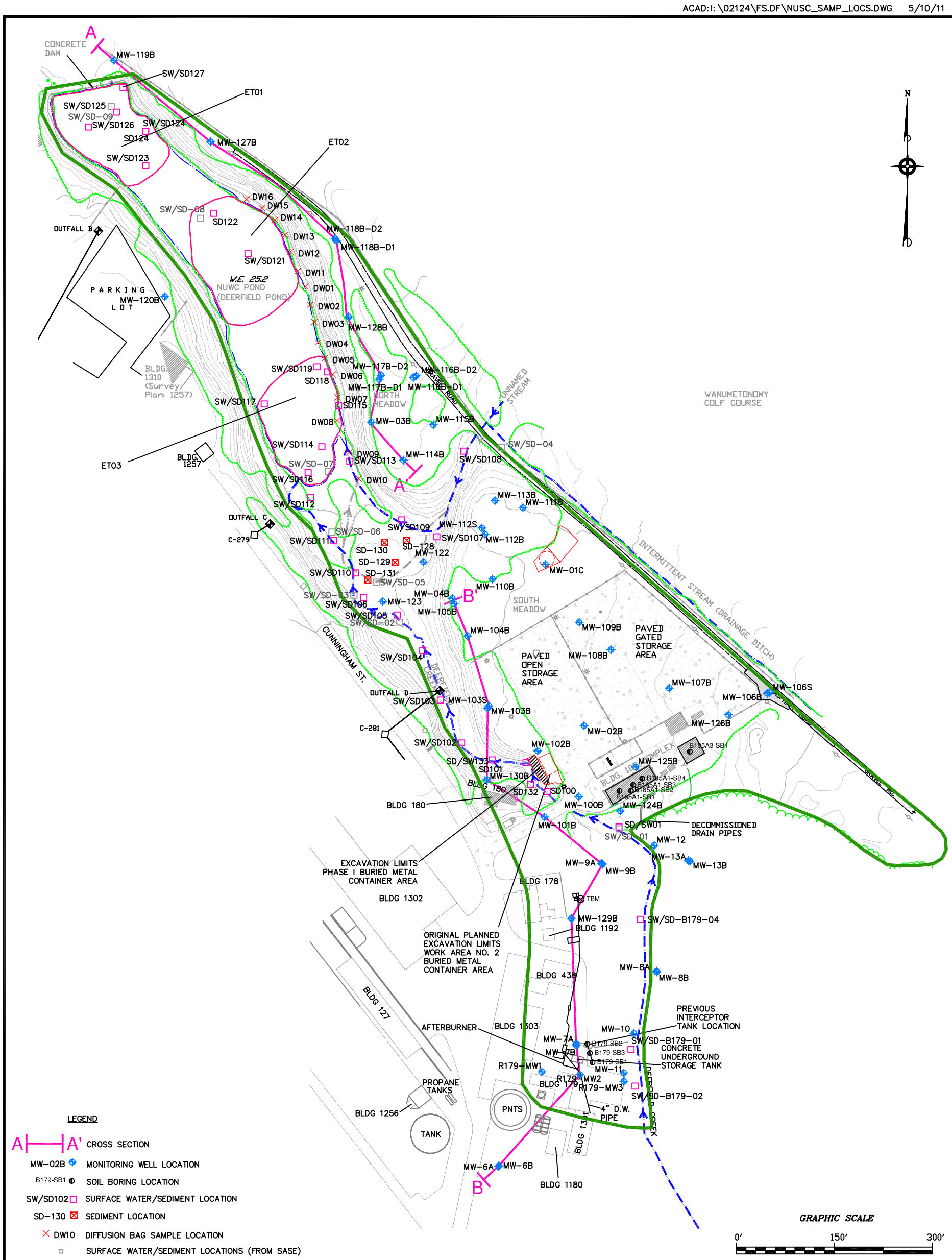

LEGEND

- A — A' CROSS SECTION
- MW-02B MONITORING WELL LOCATION
- B179-SB1 SOIL BORING LOCATION
- SW/SD102 SURFACE WATER/SEDIMENT LOCATION
- SD-130 SEDIMENT LOCATION
- DW10 DIFFUSION BAG SAMPLE LOCATION
- SURFACE WATER/SEDIMENT LOCATIONS (FROM SASE)
- BENCH MARK
- LIGHT POLE
- UTILITY POLE
- TRANSFORMER
- STREAM CHANNEL AS OBSERVED DURING FIELD ACTIVITIES, 2007–2008
- FORMER STREAM CHANNEL AS OBSERVED DURING FIELD ACTIVITIES, 2003
- VEGETATION BOUNDARY
- CATCH BASIN
- STORM DRAIN OUTLET
- STORM DRAIN
- CHAIN–LINK FENCE
- ASPHALT PAVING
- NUSC DISPOSAL AREA SITE BOUNDARY

GRAPHIC SCALE

0′ 150′ 300′

NOTES AND REFERENCES

1. BASE PLAN PRODUCED BY LOUIS FEDERICI AND ASSOCIATES.
2. VERTICAL DATUM = NGVD 1929, SEE PLAN PROVIDED BY CLIENT ENTITLED "BUILDING 179 REMEDIAL INVESTIGATION FIGURE 2 EXISTING CONDITIONS PLAN", DATED 12/3/99, BY THE NAVAL UNDERSEA WARFARE CENTER DIVISION, PUBLISHED BY TRC, 12/99.
3. BENCH MARK FOUND SE CORNER O.W.S., SCRIBED X MARK TOP SE CORNER SLAB ABOVE BURIED OIL WATER SEPARATOR, ELEV. = 57.55, NGVD'29, AS DESCRIBED ABOVE.
4. HORIZONTAL DATUM = NAD 1983.
5. TOPOGRAPHY WAS PRODUCED BY DIGITAL PHOTOGRAMMETRIC METHODS FROM AERIAL PHOTOGRAPHY CONDUCTED APRIL 25, 1996 AND FROM A SURVEY CONDUCTED BY LOUIS FEDERICI ASSOCIATES, PROVIDENCE, RI, 08/14/08.
6. BUILDING 1310 (SHOWN ON SURVEY PLAN AS BLDG. 1257) FROM SURVEY LOCATION (See Note 1); BLDG. 1257 NAME & LOCATION ACCORDING TO PLAN CITED IN NOTE 7 BY THE NAVY FACILITIES ENGINEERING COMMAND.
7. LOCATIONS OF PARKING LOT NEAR BLDG. 1310 AND OUTFALLS B, C, & D ADAPTED AND INTERPRETED FROM A PLAN BY THE DEPARTMENT OF THE NAVY, NAVY FACILITIES ENGINEERING COMMAND, "STORM DRAINAGE SYSTEM, CODDINGTON COVE", CODE IDENT NO. 80091, NO DATE, IN CONJUCTION WITH THE ACTUAL FIELD SURVEY PLAN, CITED ABOVE.
8. ALL LOCATIONS TO BE CONSIDERED APPROXIMATE AND NOT TO BE USED FOR FINAL DESIGN WITHOUT FIELD VERIFICATION.
9. DIFFUSION BAG SAMPLE DW11 WQS NOT SURVEYED. LOCATION IS TAKEN FROM FIELD NOTES. SOIL BORING SAMPLES SB–136 TO SB–140 ARE NOT SURVEYED.

TETRA TECH

SAMPLE LOCATIONS: WELLS, DIFFUSION BAGS, AND SURFACE WATER/SEDIMENT SUPPLEMENTAL REMEDIAL INVESTIGATION SITE 08, NUSC DISPOSAL AREA NAVAL STATION NEWPORT, RHODE ISLAND

FILE	SCALE
\..\NUSC_SAMP_LOCS.DWG	AS NOTED
FIGURE NUMBER 2–1	**REV** 0 **DATE** 5/10/11

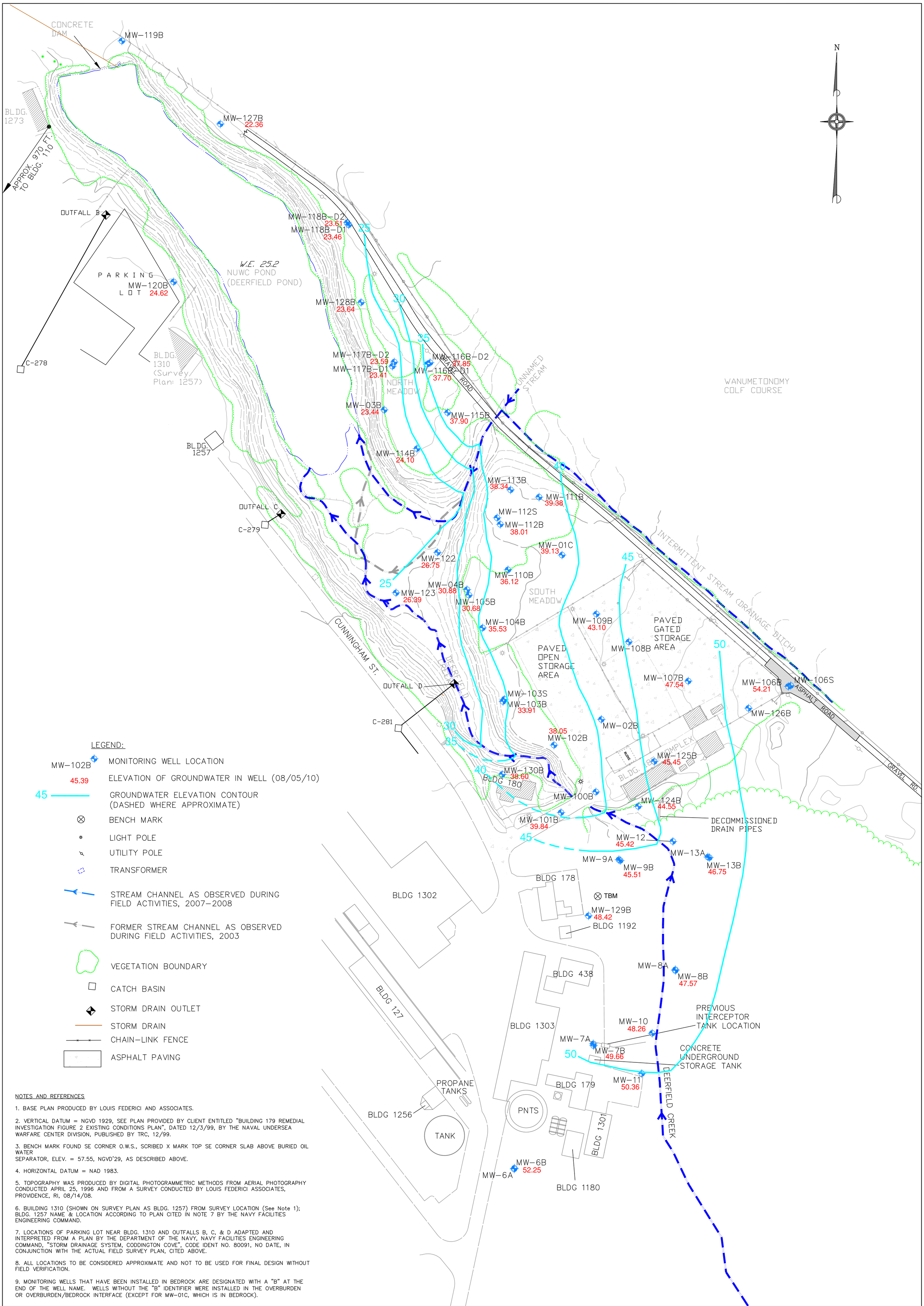

NOTES AND REFERENCES

1. BASE PLAN PRODUCED BY LOUIS FEDERICI AND ASSOCIATES.

2. VERTICAL DATUM = NGVD 1929, SEE PLAN PROVIDED BY CLIENT ENTITLED "BUILDING 179 REMEDIAL INVESTIGATION FIGURE 2 EXISTING CONDITIONS PLAN", DATED 12/3/99, BY THE NAVAL UNDERSEA WARFARE CENTER DIVISION, PUBLISHED BY TRC, 12/99.

3. BENCH MARK FOUND SE CORNER O.W.S., SCRIBED X MARK TOP SE CORNER SLAB ABOVE BURIED OIL WATER SEPARATOR, ELEV. = 57.55, NGVD'29, AS DESCRIBED ABOVE.

4. HORIZONTAL DATUM = NAD 1983.

5. TOPOGRAPHY WAS PRODUCED BY DIGITAL PHOTOGRAMMETRIC METHODS FROM AERIAL PHOTOGRAPHY CONDUCTED APRIL 25, 1996 AND FROM A SURVEY CONDUCTED BY LOUIS FEDERICI ASSOCIATES, PROVIDENCE, RI, 08/14/08.

6. BUILDING 1310 (SHOWN ON SURVEY PLAN AS BLDG. 1257) FROM SURVEY LOCATION (See Note 1); BLDG. 1257 NAME & LOCATION ACCORDING TO PLAN CITED IN NOTE 7 BY THE NAVY FACILITIES ENGINEERING COMMAND.

7. LOCATIONS OF PARKING LOT NEAR BLDG. 1310 AND OUTFALLS B, C, & D ADAPTED AND INTERPRETED FROM A PLAN BY THE DEPARTMENT OF THE NAVY, NAVY FACILITIES ENGINEERING COMMAND, "STORM DRAINAGE SYSTEM, CODDINGTON COVE", CODE IDENT NO. 80091, NO DATE, IN CONJUNCTION WITH THE ACTUAL FIELD SURVEY PLAN, CITED ABOVE.

8. ALL LOCATIONS TO BE CONSIDERED APPROXIMATE AND NOT TO BE USED FOR FINAL DESIGN WITHOUT FIELD VERIFICATION.

9. MONITORING WELLS THAT HAVE BEEN INSTALLED IN BEDROCK ARE DESIGNATED WITH A "B" AT THE END OF THE WELL NAME. WELLS WITHOUT THE "B" IDENTIFIER WERE INSTALLED IN THE OVERBURDEN OR OVERBURDEN/BEDROCK INTERFACE (EXCEPT FOR MW-01C, WHICH IS IN BEDROCK).

GRAPHIC SCALE
60' 0' 60' 120'

DRAWN BY: D.W. MACDOUGALL	TITLE: POTENTIOMETRIC SURFACE ELEVATION CONTOURS – AUGUST 5, 2010 SITE 08, NUSC DISPOSAL AREA SUPPLEMENTAL REMEDIAL INVESTIGATION REPORT NAVSTA NEWPORT, RHODE ISLAND		TETRA TECH
PREPARED BY: A. CAREY	SOURCE: PLAN PRODUCED BY LOUIS FEDERICI AND ASSOCIATES (SEE NOTES)		250 ANDOVER STREET, SUITE 200 WILMINGTON, MASSACHUSETTS 01887 (978)658-7899
CHECKED BY: D. SEIKEN	SCALE: AS SHOWN	DATE: May 9, 2011	PROJ. NO: 02124
PROJECT MANAGER: D. SEIKEN	DRAWING NO: 3-1	ACFILE NAME: I:\02124\FS.DF\NUSC_GW_CONT_080510.DWG	REV: 0
PROGRAM MANAGER: J. TREPANOWSKI			

P:\GIS\NEWPORT_NS\MAPDOCS\MXD NUSC_GW_TRICHLOROETHENE.MXD 10/22/10 SP

N

CONCRETE DAM

MW127B 4.8

DW16 11 J

DW15 9.8 J

MW118B-D2 160

MW118B-D1 200

W.E. 25.2
NUWC POND (DEERFIELD POND)

MW128B 1200

MW116B-D2 0.5 U

MW117B-D2 130

BLDG. 1310 (Survey Plan: 1257)

NORTH MEADOW

GRAVEL ROAD

UNNAMED STREAM

WANUMETONOMY COLF COURSE

MW116B-D1 0.5 U

MW117B-D1 140

MW03B 150 J

MW122 0.57 J

MW04B 0.5 U

INTERMITTENT STREAM (DRAINAGE DITCH)

SOUTH MEADOW

MW105B 2.4

CUNNINGHAM ST.

DEERFIELD CREEK

MW104B 6.3

PAVED GATED STORAGE AREA

PAVED OPEN STORAGE AREA

ASPHALT ROAD

MW103B 15

B185A3-SB1 0.5 U

MW130B 0.71 J

BLDG 180

BLDG. 185 COMPLEX

MW101B 3.5

MW12 1.1

DECOMMISSIONED DRAIN PIPES

MW09B 1.2

MW13B 0.37 J

BLDG 178

BLDG 1302

MW129B 4.5

BLDG 1192

MW08A 0.5 U

BLDG 438

MW08B 0.5 U

BLDG 127

MW07A 1 J

PREVIOUS INTERCEPTOR TANK LOCATION

BLDG 1303

MW11 0.5 U

CONCRETE UNDERGROUND STORAGE TANK

MW07B 3.9

BLDG 179

DEERFIELD C

PROPANE TANKS

PNTS

BLDG 1256

TANK

MW06A 0.5 U

BLDG 1301

BLDG 1180

MW06B 0.5 U

125 62.5 0 125 Feet

Notes:
1) The screening criterion (Oak Ridge National Laboratory Regional Screening Level for Tap Water) for Trichloroethene is 1.7 µg/L.
2) U indicates the compound was not detected at the associated detection limit.
3) J indicates the result is estimated.

Legend

Trichloroethene (µg/L)

Result Is This Many Times Screening Criterion

- Not Detected
- 0.001 - 1
- 1.001 - 10
- 10.001 - 50
- 50.001 - 100
- 100.001 - 1000
- >1000

Tetra Tech NUS, Inc.

TRICHLOROETHENE IN GROUNDWATER
SUPPLEMENTAL REMEDIAL INVESTIGATION
NUSC NEWPORT
MIDDLETOWN, RHODE ISLAND

FILE	SCALE
NUSC_GW_TRICHLOROETHENE.MXD	AS NOTED
FIGURE NUMBER: FIGURE NO. 3 - 2	REV: 0 / DATE: 10/22/10

I:\02124\FS.DF\NUSC_GW_1-1_DICHLOROETHENE.MXD 05/09/11 SP/DWM

N

CONCRETE DAM

MW127B 0.5 U

DW16 0.5 UR

DW15 0.5 UR

MW118B-D2 0.59 J

MW118B-D1 1.4

W.E. 25.2

NUWC POND (DEERFIELD POND)

MW128B 13

MW117B-D2 0.5 U

MW116B-D2 0.5 U

GRAVEL ROAD

UNNAMED STREAM

BLDG. 1310 (Survey Plan: 1257)

MW117B-D1 0.45 J

NORTH MEADOW

MW116B-D1 0.5 U

MW03B 0.505 J

WANUMETONOMY COLF COURSE

INTERMITTENT STREAM (DRAINAGE DITCH)

MW122 0.5 U

MW04B 0.77 J

SOUTH MEADOW

MW105B 7.4

PAVED GATED STORAGE AREA

MW104B 14

PAVED OPEN STORAGE AREA

CUNNINGHAM ST.

DEERFIELD CREEK

MW103B 12

ASPHALT ROAD

B185A3-SB1 0.5 U

MW130B 1.3

BLDG 180

BLDG. 185 COMPLEX

MW101B 52 J

MW12 0.5 U

DECOMMISSIONED DRAIN PIPES

MW09B 18

MW13B 0.5 U

BLDG 178

BLDG 1302

MW129B 6.15

BLDG 1192

MW08A 0.5 U

BLDG 438

MW08B 0.5 U

BLDG 127

MW07A 15

PREVIOUS INTERCEPTOR TANK LOCATION

BLDG 1303

MW11 0.5 U

CONCRETE UNDERGROUND STORAGE TANK

MW07B 11 J

BLDG 179

DEERFIELD

PROPANE TANKS

PNTS

BLDG 1256

TANK

BLDG 1301

MW06A 0.5 UJ

MW06B 0.5 U

BLDG 1180

125 62.5 0 125 Feet

Notes:
1) All concentrations below the Oak Ridge National Laboratory Regional Screening Level for Tap Water criterion of 340 µg/L.
2) Symbology is based on the result in comparison to the maximum detection (79 µg/L).
3) U indicates the compound was not detected at the associated detection limit.
4) J indicates the result is estimated.

Legend

1,1-Dichloroethene (µg/L)

Result Is This Many Times Maximum Detection

- Not Detected
- 0.001 - 1
- 1.001 - 10
- 10.001 - 50
- 50.001 - 100
- 100.001 - 1000
- >1000

TETRA TECH

1,1-DICHLOROETHENE IN GROUNDWATER
SUPPLEMENTAL REMEDIAL INVESTIGATION
NUSC NEWPORT
MIDDLETOWN, RHODE ISLAND

FILE	SCALE
NUSC_GW_1-1_DICHLOROETHENE.MXD	AS NOTED
FIGURE NUMBER: FIGURE NO. 3 - 3	REV: 0 / DATE: 05/09/11

I:\02124\FS.DF\NUSC_GW_1_1_1TRICHLOROETHANE.MXD 05/09/11 SP/DWM

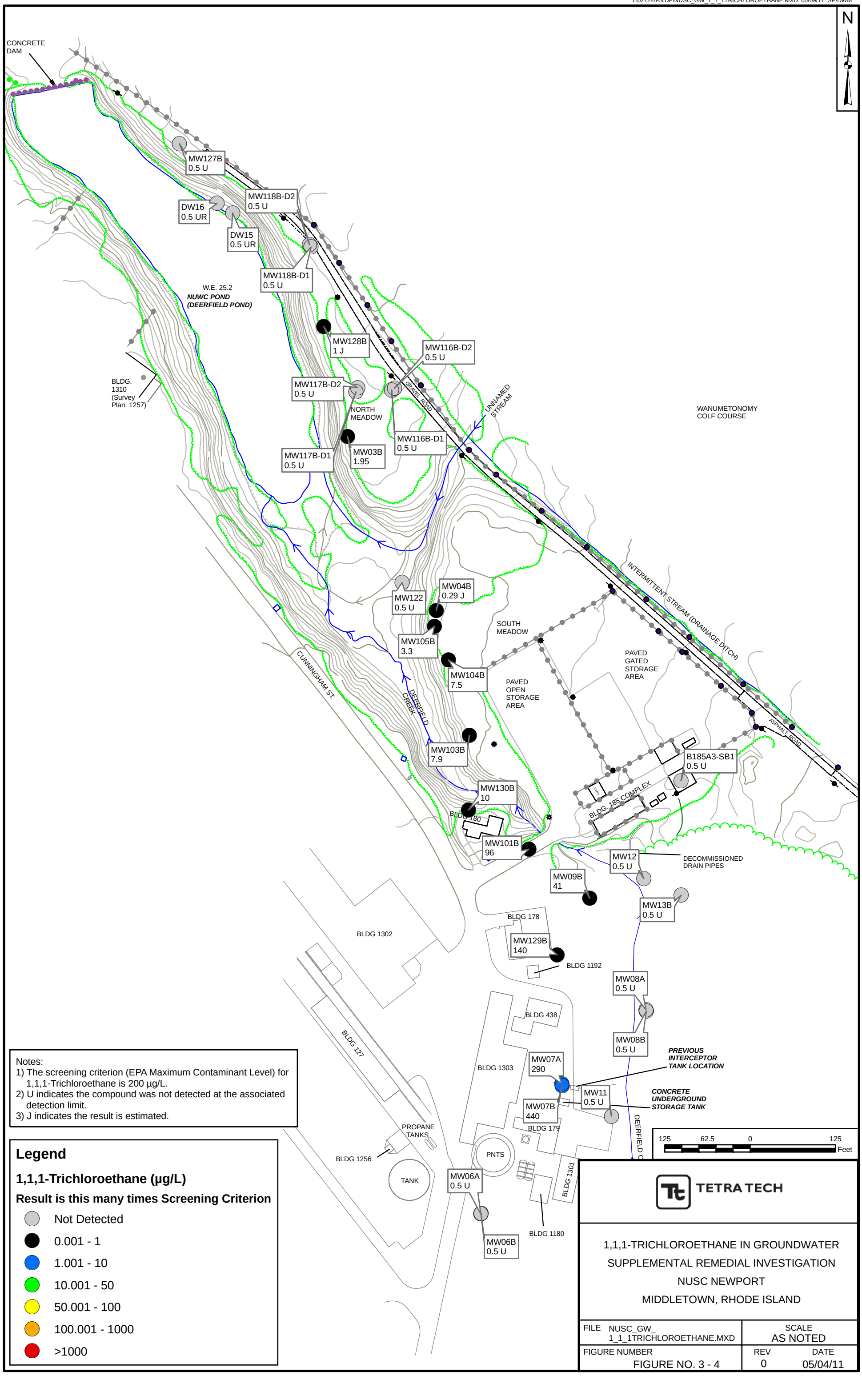

Notes:
1) The screening criterion (EPA Maximum Contaminant Level) for 1,1,1-Trichloroethane is 200 µg/L.
2) U indicates the compound was not detected at the associated detection limit.
3) J indicates the result is estimated.

Legend

1,1,1-Trichloroethane (µg/L)

Result is this many times Screening Criterion

- Not Detected
- 0.001 - 1
- 1.001 - 10
- 10.001 - 50
- 50.001 - 100
- 100.001 - 1000
- >1000

TETRA TECH

1,1,1-TRICHLOROETHANE IN GROUNDWATER
SUPPLEMENTAL REMEDIAL INVESTIGATION
NUSC NEWPORT
MIDDLETOWN, RHODE ISLAND

FILE	SCALE
NUSC_GW_1_1_1TRICHLOROETHANE.MXD	AS NOTED
FIGURE NUMBER: FIGURE NO. 3 - 4	REV: 0 / DATE: 05/04/11

I:\02124\FS.DF\NUSC_GW_TETRACHLOROETHENE.MXD 05/09/11 SP/DWM

N

CONCRETE DAM

MW127B 0.5 U

DW16 0.5 UR

DW15 0.5 UR

MW118B-D2 0.5 U

MW118B-D1 0.5 U

W.E. 25.2
NUWC POND (DEERFIELD POND)

MW128B 0.5 U

MW117B-D2 0.5 U

MW116B-D2 0.5 U

BLDG. 1310 (Survey Plan: 1257)

GRAVEL ROAD

UNNAMED STREAM

NORTH MEADOW

MW117B-D1 0.5 U

MW03B 0.66 J

MW116B-D1 0.5 U

WANUMETONOMY COLF COURSE

MW122 0.58 J

INTERMITTENT STREAM (DRAINAGE DITCH)

MW04B 0.5 U

SOUTH MEADOW

MW105B 2.6

CUNNINGHAM ST.

DEERFIELD CREEK

MW104B 2.7

PAVED GATED STORAGE AREA

PAVED OPEN STORAGE AREA

MW103B 0.5 U

ASPHALT ROAD

B185A3-SB1 0.5 U

MW130B 0.5 U

BLDG. 180

BLDG. 185 COMPLEX

MW101B 0.5 U

MW12 4.5

DECOMMISSIONED DRAIN PIPES

MW09B 0.5 U

MW13B 1.1

BLDG 178

BLDG 1302

MW129B 0.5 U

BLDG 1192

MW08A 0.5 U

MW08B 0.5 U

BLDG 438

BLDG 127

MW07A 0.53 J

BLDG 1303

PREVIOUS INTERCEPTOR TANK LOCATION

MW11 0.5 U

CONCRETE UNDERGROUND STORAGE TANK

PROPANE TANKS

BLDG 1

DEERFIELD C

BLDG 1256

PNTS

MW07B 8.3

TANK

MW06B 0.5 U

BLDG 1301

BLDG 1180

125 62.5 0 125 Feet

Notes:
1) The screening criterion (Oak Ridge National Laboratory Regional Screening Level for Tap Water) for Tetrachloroethene is 0.11 µg/L.
2) U indicates the compound was not detected at the associated detection limit.
3) J indicates the result is estimated.

Legend

Tetrachloroethene (µg/L)

Result Is This Many Times Screening Criterion

- Not Detected
- 0.001 - 1
- 1.001 - 10
- 10.001 - 50
- 50.001 - 100
- 100.001 - 1000
- >1000

TETRA TECH

TETRACHLOROETHENE IN GROUNDWATER
SUPPLEMENTAL REMEDIAL INVESTIGATION
NUSC NEWPORT
MIDDLETOWN, RHODE ISLAND

FILE NUSC_GW_TETRACHLOROETHENE.MXD	SCALE AS NOTED	
FIGURE NUMBER FIGURE NO. 3 - 5	REV 0	DATE 05/09/11

I:\02124\FS.DF\NUSC_GW_1-4_DIOXANE.MXD 05/09/11 SP/DWM

N

CONCRETE DAM

MW127B 0.22 J

DW16 1 UR

DW15 1 UR

W.E. 25.2
NUWC POND (DEERFIELD POND)

MW128B 0.42 J

MW117B-D2 0.55 U

GRAVEL ROAD

UNNAMED STREAM

BLDG. 1310 (Survey Plan: 1257)

MW117B-D1 0.5 U

NORTH MEADOW

MW03B 0.104 U

WANUMETONOMY COLF COURSE

INTERMITTENT STREAM (DRAINAGE DITCH)

MW122 0.48 U

MW04B 0.19 U

SOUTH MEADOW

MW105B 1 J

MW104B 2.4

PAVED GATED STORAGE AREA

PAVED OPEN STORAGE AREA

CUNNINGHAM ST.

DEERFIELD CREEK

MW103B 3.2

ASPHALT ROAD

B185A3-SB1 0.54 U

BLDG. 185 COMPLEX

BLDG 180

MW101B 4

MW12 0.48 U

DECOMMISSIONED DRAIN PIPES

MW09B 8.3

MW13B 0.48 U

BLDG 178

BLDG 1302

MW129B 0.665 J

BLDG 1192

BLDG 438

BLDG 127

MW07A 0.47 U

BLDG 1303

PREVIOUS INTERCEPTOR TANK LOCATION

MW11 0.475 U

CONCRETE UNDERGROUND STORAGE TANK

MW07B 0.054 J

BLDG 179

DEERFIELD

PROPANE TANKS

BLDG 1256

PNTS

TANK

BLDG 1301

BLDG 1180

125 62.5 0 125
Feet

Notes:
1) The screening criterion (NUSC Project Action Limit) for 1,4-Dioxane is 0.354 µg/L.
2) U indicates the compound was not detected at the associated detection limit.
3) J indicates the result is estimated.

Legend

1,4-Dioxane (µg/L)

Result Is This Many Times Screening Criterion

- Not Detected
- 0.001 - 1
- 1.001 - 10
- 10.001 - 50
- 50.001 - 100
- 100.001 - 1000
- >1000

TETRA TECH

1,4-DIOXANE IN GROUNDWATER
SUPPLEMENTAL REMEDIAL INVESTIGATION
NUSC NEWPORT
MIDDLETOWN, RHODE ISLAND

FILE	SCALE
NUSC_GW_1-4_DIOXANE.MXD	AS NOTED
FIGURE NUMBER	REV / DATE
FIGURE NO. 3 - 6	0 / 05/09/11

I:\02124\FS.DF\NUSC_GW_1-1DICHLOROETHANE.MXD 05/09/11 SP/DWM

N

CONCRETE DAM

MW127B 0.5 U

DW16 0.5 UR

DW15 0.5 UR

MW118B-D2 0.5 U

MW118B-D1 0.5 U

W.E. 25.2
NUWC POND (DEERFIELD POND)

MW117B-D2 0.7 J

MW128B 1.6

MW116B-D2 0.5 U

BLDG. 1310 (Survey Plan: 1257)

GRAVEL ROAD

UNNAMED STREAM

NORTH MEADOW

MW117B-D1 0.28 J

MW03B 2.95

MW116B-D1 0.5 U

WANUMETONOMY COLF COURSE

INTERMITTENT STREAM (DRAINAGE DITCH)

MW122 0.84 J

MW04B 24

SOUTH MEADOW

MW105B 110

MW104B 230 J

PAVED GATED STORAGE AREA

PAVED OPEN STORAGE AREA

CUNNINGHAM ST.

DEERFIELD CREEK

ASPHALT ROAD

MW103B 160

B185A3-SB1 0.5 U

MW130B 9.2

BLDG 180

BLDG. 185 COMPLEX

MW101B 510

MW12 0.5 U

DECOMMISSIONED DRAIN PIPES

MW09B 82 J

MW13B 0.5 U

BLDG 178

BLDG 1302

MW129B 64.5

BLDG 1192

MW08A 0.5 U

MW08B 0.5 U

BLDG 438

BLDG 127

MW07A 440

BLDG 1303

PREVIOUS INTERCEPTOR TANK LOCATION

MW11 0.5 U

CONCRETE UNDERGROUND STORAGE TANK

PROPANE TANKS

BLDG 1

BLDG 1256

PNTS

MW07B 1000

MW06A 0.5 U

TANK

BLDG 1301

BLDG 1180

MW06B 0.5 U

125 62.5 0 125 Feet

Notes:
1) The screening criterion (Oak Ridge National Laboratory Regional Screening Level for Tap Water) for 1,1-Dichloroethane is 2.4 µg/L.
2) U indicates the compound was not detected at the associated detection limit.
3) J indicates the result is estimated.

Legend

1,1-Dichloroethane (µg/L)

Result Is This Many Times Screening Criterion

- Not Detected
- 0.001 - 1
- 1.001 - 10
- 10.001 - 50
- 50.001 - 100
- 100.001 - 1000
- >1000

TETRA TECH

1,1-DICHLOROETHANE IN GROUNDWATER
SUPPLEMENTAL REMEDIAL INVESTIGATION
NUSC NEWPORT
MIDDLETOWN, RHODE ISLAND

FILE	SCALE
NUSC_GW_1-1DICHLOROETHANE.MXD	AS NOTED
FIGURE NUMBER: FIGURE NO. 3 - 7	REV: 0 / DATE: 05/09/11

ACAD:I:\02124\FS.DF\NUSC_SOIL_SAMP_LOCS.DWG 5/9/11 DWM

N

500 GALLON OIL-WATER SEPARATOR (TANK B-1)

BLDG 1303

1,500 GALLON DOUBLE WALL CONTAINMENT FUEL-WATER SEPARATOR (TANK B)

6,000 GALLON STEEL HAZARDOUS WASTE ABOVE GROUND STORAGE TANK

AFTERBURNER

3/4" CA

U/G ELECT. DUCT

U/G ELECT. DUCT

3/4" CA

6" W

2" F.M. (D.W.)

EDGE OF PAVEMENT

FORMER INTERCEPTOR TANK LOCATION

MW-10

DEERFIELD CREEK

INSET

B179-SB2

MW-7A

MW-7B

B179-SB3

B179-SB1

6" W

FORMER CONCRETE UNDERGROUND STORAGE TANK (CLOSED IN PLACE)

R179-MW1

R179-MW2

MW-11

R179-MW3

BLDG 179

PNTS

4" CAST IRON DRAINAGE PIPE

4" D.W. PIPE

BLDG 1301

BLDG 1180

MW-6B

MW-6A

GRAPHIC SCALE

0' 30' 60'

LEGEND

B179-SB1 BORING/ SAMPLING LOCATION

MW-11 EXISTING MONITORING WELL LOCATION

GRID 19 SOIL REMOVAL AREAS

SAMPLE GRIDS AND SOIL REMOVAL AREAS, BLDG 179 REMEDIATION AND CUST CLOSURE

EXISTING UTILITY LINE

INACTIVE UTILITY LINE (V.C. DRAIN PIPE)

IT-IF-001 POST-EXCAVATION SOIL SAMPLES COLLECTED BY FOSTER-WHEELER ENVIRONMENTAL CORPORATION, DECEMBER 1998

INSET

MW-7A
B179-SB2
IT-OF-006
IT-OF-008
IT-OF-001
IT-OF-007
IT-OF-002
IT-OF-003
MW-7B
IT-OF-009
IT-OF-004
IT-OF-005
G19-W7
B179-SB3
G19-W8
G19-W6
G19-W9
G19-W5
G19-F1
G19-W4
B179-SB1
G19-F2
G19-W1
G19-W2
G19-W3

GRAPHIC SCALE

0' 15' 30'

NOTES

1. ALL LOCATIONS ARE TO BE CONSIDERED APPROXIMATE.
2. G19-W4 AND G19-W6 ARE THE LOCATIONS WHERE THE RIDEM INDUSTRIAL/COMMERCIAL STANDARD FOR TPH WAS EXCEEDED.

SOURCES:

FIGURES 2 AND 3, BUILDING 179 CONCRETE UST RI, TRC ENVIRONMENTAL CORPORATION, DECEMBER 1999, PREPARED FOR NUWC, NEWPORT AND APPENDIX I, FINAL PROJECT CLOSURE REPORT FOR BUILDING 179 TANK CLOSURES, FOSTER-WHEELER ENVIRONMENTAL CORPORATION, OCTOBER 1999, PREPARED FOR NUWC, NEWPORT

TETRA TECH NUS, INC.

SOIL BORING LOCATIONS AND POST-EXCAVATION SOIL SAMPLES: BLDG 179 CUST AND INTERCEPTOR TANK SUPPLEMENTAL REMEDIAL INVESTIGATION SITE 08, NUSC DISPOSAL AREA NAVAL STATION NEWPORT, RHODE ISLAND

FILE	SCALE
\..\NUSC_SOIL_SAMP_LOCS.DWG	AS NOTED
FIGURE NUMBER	**REV** / **DATE**
FIGURE NO. 3-8	0 / 5/9/2011

ACAD:I:\02124\VFS.DF\NUSC_BLDG_185_SB_LOCS.DWG 5/9/11 DWM

PAVED STORAGE AREA

MW-106B

MW-126B

MW-02B

W-102B

B185A3-SB1

RUINS

BLDG. 185 COMPLEX

MW-125B

B185A1-SB4

B185A1-SB3

B185A1-SB2

B185A1-SB1

SD100

MW-100B

MW-124B

MW-101B

SD/SW01

SW/SD-01

MW-12

LEGEND

SOIL BORING LOCATION

MONITORNG WELL LOCATION

SURFACE WATER/ SEDIMENT LOCATION

SITE BOUNDARY

DEERFIELD CREEK

TETRA TECH

SOIL BORINGS LOCATIONS
AT THE BUILDING 185 COMPLEX
SUPPLEMENTAL REMEDIAL INVESTIGATION
SITE 08, NUSC DISPOSAL AREA
NAVAL STATION NEWPORT, RHODE ISLAND

FILE	SCALE
\..\NUSC_BLDG_185_SB_LOCS.DWG	AS NOTED
FIGURE NUMBER	**REV** / **DATE**
FIGURE NO. 3-9	0 / 5/9/11

I:\02124\FS.DF\NUSC_SOIL_TYPE.MXD DWM 05/09/11

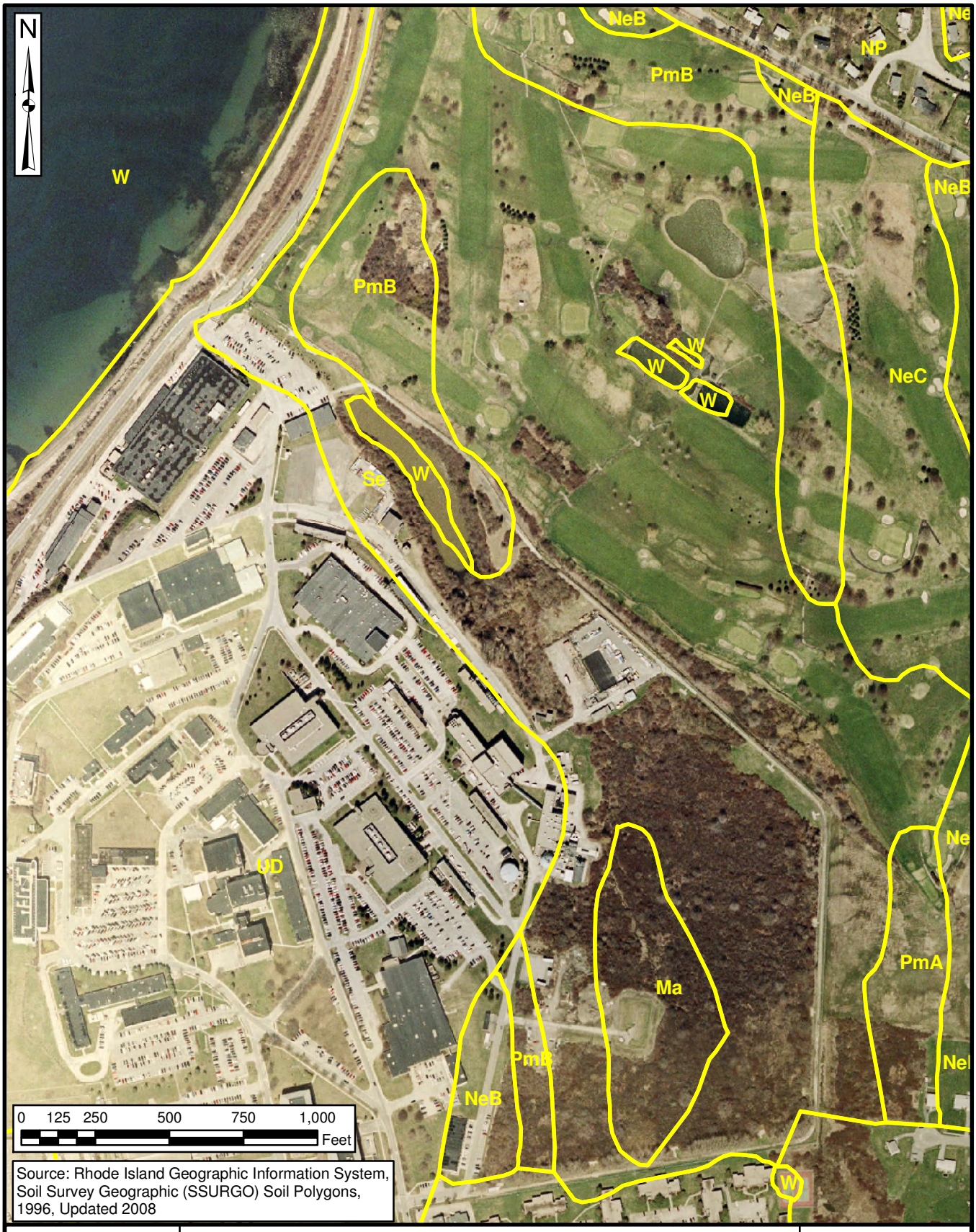

TETRA TECH

SOIL CLASSIFICATION
SITE 08, NUSC DISPOSAL AREA
SUPPLEMENTAL REMEDIAL INVESTIGATION
NAVSTA NEWPORT, RHODE ISLAND

SCALE	
AS NOTED	
FILE	
\..\NUSC_SOIL_TYPE.MXD	
REV	DATE
0	05/09/11
FIGURE NUMBER	
4-1	

ACAD:I:\02124\FS.DF\NUSC_X-SECTION_A-A'.DWG 5/9/11 DWM

NORTH MEADOW

Northwest — Southeast

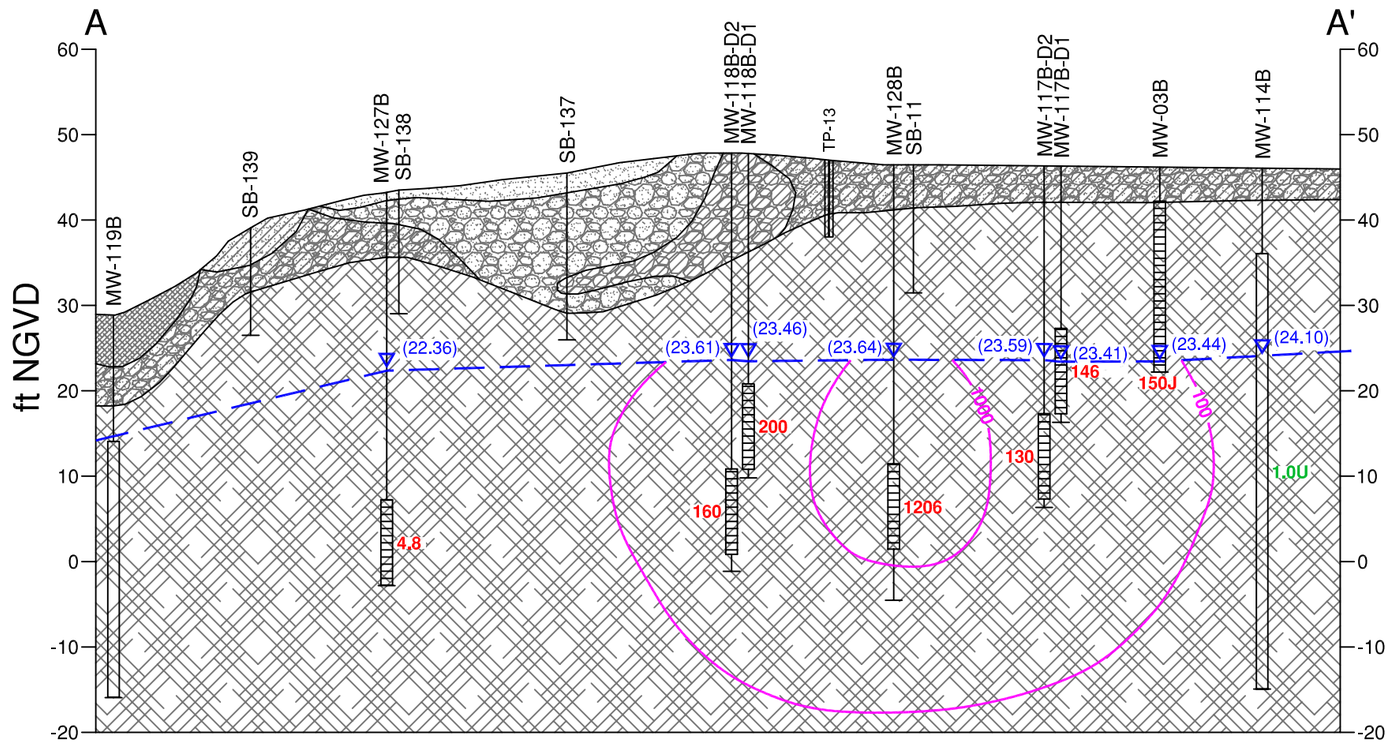

SAND

GRAVELLY SAND

SILTY GRAVEL

SILTY SAND

SILTY SAND WITH GRAVEL

FILL

BEDROCK

OPEN HOLE WELL OR BORING

MW-112B — SOIL BORING / WELL LOCATION ID

GROUND SURFACE

TOP OF OPEN HOLE

(23.34) WATER ELEVATION MEASURED ON AUGUST 5, 2010

BOTTOM OF OPEN HOLE

BOTTOM OF BORING

SCREENED WELL

MW-112B — SOIL BORING / WELL LOCATION ID

GROUND SURFACE

TOP OF WELL SCREEN

BOTTOM OF WELL SCREEN

BOTTOM OF BORING

TP-100 — TEST PIT ID

GROUND SURFACE

BOTTOM OF TEST PIT

NOTES:
1. PLAN NOT TO BE USED FOR DESIGN.
2. ALL LOCATIONS AND CONTACTS ARE TO BE CONSIDERED APPROXIMATE.
3. HORIZONTAL DATUM IS BASED ON THE RHODE ISLAND STATE PLANE COORDINATE SYSTEM NAD1983. VERTICAL DATUM IS BASED ON NGVD 1988.
4. SEE FIGURE 2-1 FOR LOCATION OF CROSS-SECTION A-A'.

146 TCE CONCENTRATION (µg/L) (JUNE, AUGUST 2010)

146 TCE CONCENTRATION (µg/L) (MAY 2008)

CONTOUR LINES THAT DEFINE AREAS OF INFERRED, EQUAL TCE CONCENTRATION (IN µg/L)

GROUNDWATER ELEVATION (ESTIMATED) (AUGUST 5, 2010)

HORIZONTAL GRAPHIC SCALE

0' 60'

VERTICAL GRAPHIC SCALE

0' 20'

TETRA TECH

CROSS-SECTIONAL VIEW OF TCE PLUME IN NORTH MEADOW SITE 08, NUSC DISPOSAL AREA SUPPLEMENTAL REMEDIAL INVESTIGATION REPORT NAVSTA NEWPORT, RHODE ISLAND

FILE	SCALE
\..\NUSC_X-SECTION_A-A'.DWG	AS NOTED
FIGURE NUMBER 6-1	**REV** 1 **DATE** 5/9/11

ACAD:I:\02124\FS.DF\NUSC_X-SECTION_B-B'.DWG 5/10/11 DWM

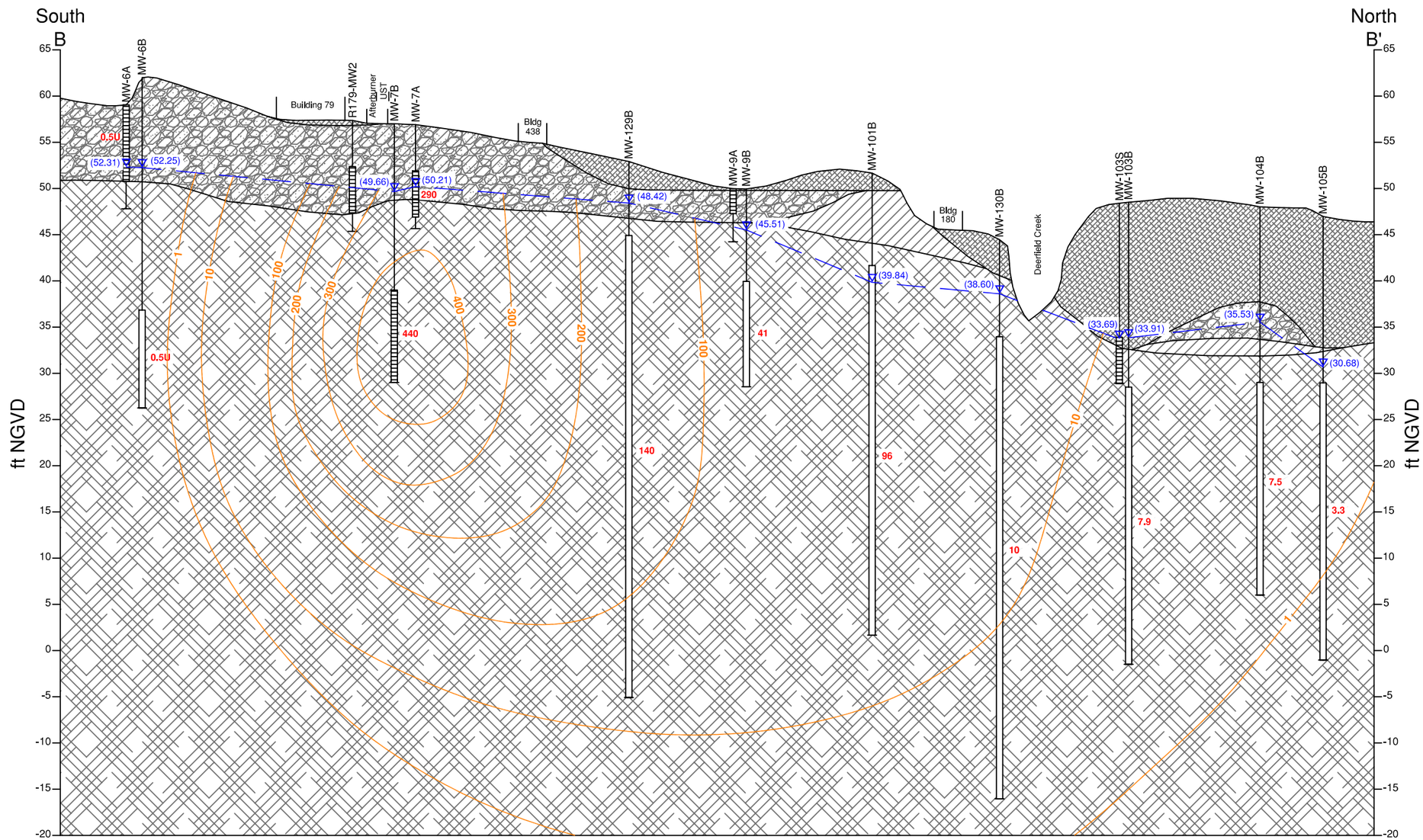

SILT

SANDY SILT WITH GRAVEL

FILL

BEDROCK

OPEN HOLE WELL

MW-129B — WELL LOCATION ID

GROUND SURFACE

TOP OF OPEN HOLE

(23.34) WATER ELEVATION MEASURED ON AUGUST 5, 2010

BOTTOM OF OPEN HOLE

BOTTOM OF BORING

SCREENED WELL

MW-7B — WELL LOCATION ID

GROUND SURFACE

TOP OF WELL SCREEN

BOTTOM OF WELL SCREEN

BOTTOM OF BORING

NOTES:
1. PLAN NOT TO BE USED FOR DESIGN.
2. ALL LOCATIONS AND CONTACTS ARE TO BE CONSIDERED APPROXIMATE.
3. HORIZONTAL DATUM IS BASED ON THE RHODE ISLAND STATE PLANE COORDINATE SYSTEM NAD1983. VERTICAL DATUM IS BASED ON NGVD 1988.
4. SEE FIGURE 2-1 FOR LOCATION OF CROSS-SECTION B-B'.

GROUNDWATER ELEVATION (AUGUST 5, 2010)

CONTOUR LINES THAT DEFINE AREAS OF INFERRED, EQUAL 1,1,1-TCA CONCENTRATION (IN µg/L)

440 1,1,1-TCA CONCENTRATION (µg/L) (JUNE-AUGUST 2010)

HORIZONTAL GRAPHIC SCALE

0' 80'

VERTICAL GRAPHIC SCALE

0' 10'

VERTICAL EXAGGERATION = 8x

TETRA TECH

CROSS-SECTIONAL VIEW OF 1,1,1-TCA PLUME NEAR BUILDING 179
SITE 08, NUSC DISPOSAL AREA
SUPPLEMENTAL REMEDIAL INVESTIGATION REPORT
NAVSTA NEWPORT, RHODE ISLAND

FILE	SCALE
\..\NUSC_X-SECTION_B-B'.DWG	AS NOTED
FIGURE NUMBER	**REV** / **DATE**
FIGURE NO. 6-2	0 / 5/10/11

REFERENCES

REFERENCES

Environmental Protection Agency, U.S. (EPA), 2002. Draft Guidance for Evaluating the Vapor Intrusion to Indoor Air Pathway from Groundwater and Soils. EPA530-F-02-052. November.

EPA, 2010. Regional Screening Levels for Chemical Contaminants at Superfund Sites. November.

EPA, 2009. National Primary Drinking Water Regulations. EPA 816-F-09-0004. May.

Ministry of Housing, Spatial Planning and the Environment (MHSPE), 2000. *Circular on Target Values and Intervention Values for Soil Remediation*. Bilthoven, The Netherlands: Ministry of Housing, Spatial Planning and the Environment.

Rhode Island Department of Environmental Management (RIDEM), 2004. Rules and Regulations for the Investigation and Remediation of Hazardous Material Releases (short title: Remediation Regulations). DEM-DSR-01-93. February.

Tetra Tech (Tetra Tech NUS, Inc.). 2005. Study Area Screening Evaluation for NUSC Disposal Area, Naval Undersea Warfare Center, Middletown, Rhode Island. Prepared for the Engineering Field Activity Northeast, Naval Facilities Engineering Command. January.

Tetra Tech, 2006. Background Soil Investigation Report for NUSC Disposal Area, SA-08, Naval Undersea Warfare Center, Middletown, Rhode Island. Prepared for the Naval Facilities Engineering Command, Mid-Atlantic. September.

Tetra Tech, 2008. Basewide Background Study Report for Naval Station Newport, Newport, Rhode Island. Prepared for the Naval Facilities Engineering Command, Mid-Atlantic. July.

Tetra Tech, 2010a. Remedial Investigation for Site 08, Naval Undersea Systems Center (NUSC) Disposal Area, Naval Station Newport, Rhode Island. Prepared for the Naval Facilities Engineering Command, Mid-Atlantic. January.

Tetra Tech, 2010b. Work Plan Addendum, Supplemental Remedial Investigation for Site 08, Naval Undersea Systems Center (NUSC) Disposal Area, Naval Station Newport, Rhode Island. Prepared for the Naval Facilities Engineering Command, Mid-Atlantic. June.

ATTACHMENT A

BORING LOGS AND WELL COMPLETION REPORTS

BORING LOG FOR:	Supplemental RI, Site 08, NAVSTA Newport	BORING NO.:	B179-SB1
PROJECT NO.:	112G02124	START DATE:	7/27/10
LOGGED BY:	R.Clark	TRANSCRIBED BY: R. Clark	COMPLETION: DATE: 7/27/10
DRILLED BY (Company/Driller):	CDS / A. Allen	MON. WELL NO.:	NA
GRD. SURFACE ELEVATION:	56.6	ELEVATION FROM: NGVD 1929	CHECKED BY: D. Seiken

DEPTH (FEET)	DEPTH OF AUGERS OR CASING	BLOWS PER 6"	SAMP REC. / SAMP LENG.	SAMPLING TIME & SAMPLE NO. (QA/QC STATUS)	DEPTH MAT'L CHG./ WELL PROF'L	MATERIAL CLASSIFICATION	USCS	REMARKS (moisture condition; odors; geological classification; rock weathering; etc.)	PID FIELD SCREENING DATA *METHOD* = [PID, (PPM) HEADSPACE]
			8/12	1415 (DUP2) B179-SB1-0001 0-1	SAND	Brown silty fine SAND, some subangular fine gravel, dry	SM		0.0
			16/24	1-3	SILT	Brown SILT, trace weathered platy gravel (phyllite), dry	ML		0.0
2									
			12/24	3-5		0-10 in. brown same as above	ML		2.5
4						10-12 in. gray very weathered PHYLLITE, trace silt, dry			
			18/24	1430 5-7 B179-SB1-0507		0-2 in. same as above			7.1
6						2-12 in. Olive gray SILT, trace platy gravel, damp	ML		
			15/24	7-9		0-10 in. same as above	ML		1.3
8					WTHR BED-ROCK	10-15 in. Olive gray platy weathered BEDROCK (phyllite), damp			
			6/24	9-11		Same as above			0.6
10									
						Refusal at 11 ft bgs. End of boring.			
12									
14									

TYPE OF DRILLING RIG:	Geoprobe DT 6610	Note:	*Tetra Tech NUS, Inc.*
METHOD OF ADVANCING BORING:	Macrocore	S = Screening	
METHOD OF SOIL SAMPLING:	2 ft long acetate sleeves	HS = Headspace	
METHOD OF ROCK CORING:	NA	EOB = End of Boring	
GROUNDWATER LEVELS:	NA		
OTHER OBSERVATIONS:		BORING NO.: B179-SB1	PAGE: 1 OF 1

TtNUS Form 0018

BORING LOG FOR:	Supplemental RI, Site 08, NAVSTA Newport		BORING NO.: B179-SB2
PROJECT NO.:	112G02124		START DATE: 7/27/10
LOGGED BY:	R.Clark	TRANSCRIBED BY: R. Clark	COMPLETION: DATE: 7/27/10
DRILLED BY (Company/Driller):	CDS / A. Allen		MON. WELL NO.: NA
GRD. SURFACE ELEVATION:	56.5	ELEVATION FROM: NGVD 1929	CHECKED BY: D. Seiken

DEPTH (FEET)	DEPTH OF AUGERS OR CASING	BLOWS PER 6"	SAMP REC. / SAMP LENG.	SAMPLING TIME & SAMPLE NO. (QA/QC STATUS)	DEPTH MAT'L CHG./ WELL PROF'L	MATERIAL CLASSIFICATION	USCS	REMARKS (moisture condition; odors; geological classification; rock weathering; etc.)	PID FIELD SCREENING DATA *METHOD* = [PID, (PPM) HEADSPACE]
			8/12	1543 (MS/MSD) 0-1 B179-SB2-0001	SAND	Brown fine to medium SAND, some coarse sand and subangular gravel up to ½ in., dry	SW		0.0
			18/24	1-3		Brown fine to coarse SAND, some fine subangular to subrounded gravel, dry	SW		0.0
2									
			18/24	3-5	SILT SAND	Olive gray SILT and very fine SAND, trace platy weathered gravel (phyllite), damp	SM		0.0
4									
			16/24	5-7		Same as above with rusty colored mottles.	SM		0.0
6									
			17/24	1600 7-9 B179-SB2-0709	SANDY SILT	Dark olive gray SILT, some fine to coarse sand and subangular to angular gravel up to ½	ML		0.0
8						Damp			
			12/24	9-11	WTHR BED-ROCK	0-3 in. same as above	ML		0.0
10						3-12 in. Gray weathered ROCK (phyllite) dry.		Refusal at 11 ft bgs, end of boring.	
12									
14									

TYPE OF DRILLING RIG:	Geoprobe DT 6610	Note:	*Tetra Tech NUS, Inc.*
METHOD OF ADVANCING BORING:	Macrocore	S = Screening	
METHOD OF SOIL SAMPLING:	2 ft acetate sleeves	HS = Headspace	
METHOD OF ROCK CORING:	NA	EOB = End of Boring	
GROUNDWATER LEVELS:	NA		
OTHER OBSERVATIONS:		BORING NO.: B179-SB2	PAGE: 1 OF 1

TtNUS Form 0018

BORING LOG FOR:	Supplemental RI, Site 08, NAVSTA Newport			BORING NO.:	B179-SB3
PROJECT NO.:	112G02124			START DATE:	7/27/10
LOGGED BY:	R.Clark	TRANSCRIBED BY:	R. Clark	COMPLETION: DATE:	7/27/10
DRILLED BY (Company/Driller):	CDS / A. Allen			MON. WELL NO.:	NA
GRD. SURFACE ELEVATION:	56.5	ELEVATION FROM:	NGVD 1929	CHECKED BY:	D. Seiken

DEPTH (FEET)	DEPTH OF AUGERS OR CASING	BLOWS PER 6"	SAMP REC. / SAMP LENG.	SAMPLING TIME & SAMPLE NO. (QA/QC STATUS)	DEPTH MAT'L CHG./ WELL PROF'L	MATERIAL CLASSIFICATION	USCS	REMARKS (moisture condition; odors; geological classification; rock weathering; etc.)	PID FIELD SCREENING DATA *METHOD* = [PID, (PPM)] HEADSPACE
			8/12	0910 (DUP1) 0-1 B179-SB3-0001	SAND GRAVEL	Brown fine to medium SAND and subrounded GRAVEL up to ½ in., dry.	SW		0.0
			12/24	1-3		Brownish gray fine to coarse SAND, some fine angular gravel, damp.	SW		0.0
2									
			18/24	3-5	SILT SAND	Gray/brown SILT and very fine SAND, damp.	SM		0.0
4									
			12/24	0915 5-7 B179-SB3-0507		Same as above with little subangular gravel up to ½ in.	SM		0.0
6									
			16/24	7-9		Same as above with rust at 7 ft bgs, trace medium to coarse sand, damp	SM		0.0
8									
			6/12	9-10	WTHR BED-	Gray weathered BEDROCK (phyllite)			0.0
10			18/24	10-12	ROCK	Same as above			0.0
12			18/24	12-14		Same as above, wet at bottom			0.0
14								End of boring.	

TYPE OF DRILLING RIG:	Geoprobe DT 6610	Note:	*Tetra Tech NUS, Inc.*
METHOD OF ADVANCING BORING:	Macrocore	S = Screening	
METHOD OF SOIL SAMPLING:	2 ft long acetate sleeves	HS = Headspace	
METHOD OF ROCK CORING:	NA	EOB = End of Boring	
GROUNDWATER LEVELS:	NA		
OTHER OBSERVATIONS:		BORING NO.: B179-SB3	PAGE: 1 OF 1

TtNUS Form 0018

BORING LOG FOR:	Supplemental RI, Site 08, NAVSTA Newport	BORING NO.:	B185A1-SB1
PROJECT NO.:	112G02124	START DATE:	7/28/10
LOGGED BY:	R.Clark	TRANSCRIBED BY: R. Clark	COMPLETION: DATE: 7/28/10
DRILLED BY (Company/Driller):	CDS / A. Allen	MON. WELL NO.:	NA
GRD. SURFACE ELEVATION:	51.4	ELEVATION FROM: NGVD 1929	CHECKED BY: D. Seiken

DEPTH (FEET)	DEPTH OF AUGERS OR CASING	BLOWS PER 6"	SAMP REC. / SAMP LENG.	SAMPLING TIME & SAMPLE NO. (QA/QC STATUS)	DEPTH MAT'L CHG./ WELL PROF'L	MATERIAL CLASSIFICATION	USCS	REMARKS (moisture condition; odors; geological classification; rock weathering; etc.)	PID FIELD SCREENING DATA *METHOD* = [PID, (PPM)] HEADSPACE
						Asphalt underlain with gravel. .			
			24/24	1205 1-3 B185A1-SB1-0103	SAND	0-6 in. Brown fine to medium SAND, trace platy gravel, dry. 6-8 in. Gray PHYLLITE	SW		1.8
					SILT	8-24 in. Gray SILT, some medium to coarse sand and platy gravel, dry.	ML		
2									
			12/24	3-5		Same as above	ML		1.7
4									
			24/24	5-7		0-6 in. same as above	ML		1.2
					WTHR	6-24 in. Gray weathered bedrock (phyllite), damp			
6					BED-ROCK				
			10/10	1225 7-7.9 B185A1-SB1-0708		Same as above		Refusal and end of boring at 7 ft 10 in.	21.8
8									
10									
12									
14									

TYPE OF DRILLING RIG:	Geoprobe DT 6610	Note:	*Tetra Tech NUS, Inc.*
METHOD OF ADVANCING BORING:	Macrocore	S = Screening	
METHOD OF SOIL SAMPLING:	2 ft long acetate sleeves	HS = Headspace	
METHOD OF ROCK CORING:	NA	EOB = End of Boring	
GROUNDWATER LEVELS:	NA		
OTHER OBSERVATIONS:		BORING NO.: B185A1-SB1	PAGE: 1 OF 1

TtNUS Form 0018

BORING LOG FOR:	Supplemental RI, Site 08, NAVSTA Newport			BORING NO.:	B185A1-SB2
PROJECT NO.:	112G02124			START DATE:	7/28/10
LOGGED BY:	R.Clark	TRANSCRIBED BY:	R. Clark	COMPLETION: DATE:	7/28/10
DRILLED BY (Company/Driller):	CDS / A. Allen			MON. WELL NO.:	NA
GRD. SURFACE ELEVATION:	51.0	ELEVATION FROM:	NGVD 1929	CHECKED BY:	D. Seiken

DEPTH (FEET)	DEPTH OF AUGERS OR CASING	BLOWS PER 6"	SAMP REC. / SAMP LENG.	SAMPLING TIME & SAMPLE NO. (QA/QC STATUS)	DEPTH MAT'L CHG./ WELL PROF'L	MATERIAL CLASSIFICATION	USCS	REMARKS (moisture condition; odors; geological classification; rock weathering; etc.)	PID FIELD SCREENING DATA *METHOD* = [PID, (PPM)] HEADSPACE
						Asphalt underlain with gravel.			
			18/24	1415 1-3 B185A1-SB2-0103	SILT	Gray SILT, some fine to coarse sand, trace platy gravel, dry	ML		14.1
2									
			18/24	1430 3-5 B185A1-SB2-0305		Same as above	ML		4.1
4									
			16/24	5-7	WTHR BED-ROCK	Gray weathered phyllite, dry			1.2
6									
			10/10	7-7.9		Same as above		Refusal and end of boring at 7 ft 10 in.	2.3
8									
10									
12									
14									

TYPE OF DRILLING RIG:	Geoprobe DT 6610	Note:	*Tetra Tech NUS, Inc.*
METHOD OF ADVANCING BORING:	Macrocore	S = Screening	
METHOD OF SOIL SAMPLING:	2 ft long acetate sleeves	HS = Headspace	
METHOD OF ROCK CORING:	NA	EOB = End of Boring	
GROUNDWATER LEVELS:	NA		
OTHER OBSERVATIONS:		BORING NO.: B185A1-SB2	PAGE: 1 OF 1

TtNUS Form 0018

BORING LOG FOR:	Supplemental RI, Site 08, NAVSTA Newport			BORING NO.:	B185A1-SB3
PROJECT NO.:	112G02124			START DATE:	7/28/10
LOGGED BY:	R.Clark	TRANSCRIBED BY:	R. Clark	COMPLETION: DATE:	7/28/10
DRILLED BY (Company/Driller):	CDS / A. Allen			MON. WELL NO.:	NA
GRD. SURFACE ELEVATION:	51.1	ELEVATION FROM:	NGVD 1929	CHECKED BY:	D. Seiken

DEPTH (FEET)	DEPTH OF AUGERS OR CASING	BLOWS PER 6"	SAMP REC. / SAMP LENG.	SAMPLING TIME & SAMPLE NO. (QA/QC STATUS)	DEPTH MAT'L CHG./ WELL PROF'L	MATERIAL CLASSIFICATION	USCS	REMARKS (moisture condition; odors; geological classification; rock weathering; etc.)	PID FIELD SCREENING DATA *METHOD* = [PID, (PPM)] HEADSPACE
						Asphalt underlain with gravel.			
			10/12	1105 1-3 B185A1-SB3-0103	SILT	Gray SILT, some fine to coarse sand, trace rounded gravel up to ¾ in., dry	ML		2.6
2									
			18/24	1115 3-5 B185A1-SB3-0305		Same as above, damp.	ML	slight petroleum odor	1042
4									
			22/24	5-7		0-6 in. same as above 6-22 in. gray weathered ROCK (phyllite), dry	ML		79.9
6					WTHR BED-ROCK				
			6/6	7-7.4		Same as above		Refusal and end of boring at 7 ft 5 in.	54.1
8									
10									
12									
14									

TYPE OF DRILLING RIG:	Geoprobe DT 6610	Note:	*Tetra Tech NUS, Inc.*
METHOD OF ADVANCING BORING:	Macrocore	S = Screening	
METHOD OF SOIL SAMPLING:	2 ft long acetate sleeves	HS = Headspace	
METHOD OF ROCK CORING:	NA	EOB = End of Boring	
GROUNDWATER LEVELS:	NA		
OTHER OBSERVATIONS:		BORING NO.: B185A1-SB3	PAGE: 1 OF 1

TtNUS Form 0018

BORING LOG FOR:	Supplemental RI, Site 08, NAVSTA Newport	BORING NO.:	B185A1-SB4
PROJECT NO.:	112G02124	START DATE:	7/28/10
LOGGED BY:	R.Clark	TRANSCRIBED BY: R. Clark	COMPLETION: DATE: 7/28/10
DRILLED BY (Company/Driller):	CDS / A. Allen	MON. WELL NO.:	NA
GRD. SURFACE ELEVATION:	51.6	ELEVATION FROM: NGVD 1929	CHECKED BY: D. Seiken

DEPTH (FEET)	DEPTH OF AUGERS OR CASING	BLOWS PER 6"	SAMP REC. / SAMP LENG.	SAMPLING TIME & SAMPLE NO. (QA/QC STATUS)	DEPTH MAT'L CHG./ WELL PROF'L	MATERIAL CLASSIFICATION	USCS	REMARKS (moisture condition; odors; geological classification; rock weathering; etc.)	PID FIELD SCREENING DATA *METHOD* = [PID, (PPM) HEADSPACE]
						Asphalt underlain with gravel.			
			14/24	1005 1-3 B185A1-SB4-0103	SILT SAND GRAVEL	0-3 in. Black GRAVEL and fine to coarse SAND, dry 3-14 in. Gray SILT and very fine SAND, some coarse sand and gravel, dry	GP SM		10.5
2									
			24/24	3-5		0-8 in. dark brown same as above, damp	SM		0.4
					WTHR BED- ROCK	8-24 in. Gray weathered BEDROCK (phyllite), damp			
4									
			24/24	1025 5-7 B185A1-SB4-0507		Same as above, dry			0.5
6									
			12/14	7-8.1		Same as above		Refusal and end of boring 8 ft 2 in.	0.1
8									
10									
12									
14									

TYPE OF DRILLING RIG:	Geoprobe DT 6610	Note:	*Tetra Tech NUS, Inc.*
METHOD OF ADVANCING BORING:	Macrocore	S = Screening	
METHOD OF SOIL SAMPLING:	2 ft long acetate sleeves	HS = Headspace	
METHOD OF ROCK CORING:	NA	EOB = End of Boring	
GROUNDWATER LEVELS:	NA		
OTHER OBSERVATIONS:		BORING NO.: B185A1-SB4	PAGE: 1 OF 1

TtNUS Form 0018

BORING LOG FOR:	Supplemental RI, Site 08, NAVSTA Newport			BORING NO.:	B185A3-SB1
PROJECT NO.:	112G02124			START DATE:	7/28/10
LOGGED BY:	R.Clark	TRANSCRIBED BY:	R. Clark	COMPLETION: DATE:	7/28/10
DRILLED BY (Company/Driller):	CDS / A. Allen			MON. WELL NO.:	NA
GRD. SURFACE ELEVATION:	51.1 ft	ELEVATION FROM:	NGVD 1929	CHECKED BY:	D. Seiken

DEPTH (FEET)	DEPTH OF AUGERS OR CASING	BLOWS PER 6"	SAMP REC. / SAMP LENG.	SAMPLING TIME & SAMPLE NO. (QA/QC STATUS)	DEPTH MAT'L CHG./ WELL PROF'L	MATERIAL CLASSIFICATION	USCS	REMARKS (moisture condition; odors; geological classification; rock weathering; etc.)	PID FIELD SCREENING DATA *METHOD* = [PID, (PPM) HEADSPACE]
						Asphalt underlain with gravel.			
					SILT	Olive gray SILT, trace coarse sand and fine subangular to subrounded gravel, dry	ML		0.1
			24/24	1600					
2				1-3					
					SAND	Olive gray very fine SAND and SILT, some fine to coarse subangular to subrounded gravel	SM		0.1
			20/24	1615	SILT	And platy gravel up to 1 inch, dry			
4				3-5	GRAVEL				
						0-4 in. same as above	SM		0.0
			24/24			4-9 in. olive gray fine to medium SAND, trace fine gravel, wet.	SW		
6				5-7		9-22 in. olive gray SILT and very fine SAND, dry	SM		
							GP		
						0-6 in. brown loose fine to medium SAND, wet	SW		0.0
			18/24			6-14 in. dark brown fine to medium SAND, trace fine gravel, wet.	SW		
8				7-9	WTHR BED-	14-18 in. dark gray platy WEATHERED BEDROCK, dry			
					ROCK	Olive gray silty fine to coarse SAND and fine angular GRAVEL, wet			0.0
			3/4			Refusal at 9 ft 4 in. End of Boring.			
10				9-9.3					
12									
14									

TYPE OF DRILLING RIG:	Geoprobe DT 6610	Note:	*Tetra Tech NUS, Inc.*
METHOD OF ADVANCING BORING:	Macrocore	S = Screening	
METHOD OF SOIL SAMPLING:	2 ft long acetate sleeves	HS = Headspace	
METHOD OF ROCK CORING:	NA	EOB = End of Boring	
GROUNDWATER LEVELS:	NA		
OTHER OBSERVATIONS:		BORING NO.: B185A3-SB1	PAGE: 1 OF 1

TtNUS Form 0018

BORING LOG FOR:	Supplemental RI, Site 08, NAVSTA Newport	BORING NO.:	MW-127B
PROJECT NO.:	112G02124	START DATE:	7/9/10
LOGGED BY:	A Carey / R.Clark	TRANSCRIBED BY: R. Clark	COMPLETION: DATE: 7/12/10
DRILLED BY (Company/Driller):	CDS / T. Martinelli	MON. WELL NO.:	MW-127B
GRD. SURFACE ELEVATION:	43.2 ft	ELEVATION FROM: NGVD 1929	CHECKED BY: D. Seiken

DEPTH (FEET)	WELL DIAGRAM	BLOWS PER 6"	SAMP REC. / SAMP LENG.	SAMPLING TIME & SAMPLE NO. (QA/QC STATUS)	DEPTH MAT'L CHG./ WELL PROF'L	MATERIAL CLASSIFICATION	USCS	REMARKS (moisture condition; odors; geological classification; rock weathering; etc.)	PID FIELD SCREENING DATA *METHOD* = [PID, (PPM) HEADSPACE]
		4	13/24	0-2	SILT	Light Brown SILT, little sand, trace clay, dry, loose.	ML	roots throughout, rock in tip	0.0
		3							
		4							
		7							
2		16	16/24	2-4	SAND SILT GRAVEL	Gray, fine to coarse SAND, little silt, rock fragments (phyllite), dry, medium dense.	SW		0.0
		20							
		25							
		35							
4		15	15/24	4-6		Same as above.	SW		0.0
		22							
		33							
		70							
6		111	2/6	6-8	WTHR BED-ROCK	Gray SAND, some silt, rock fragments (phyllite), dry, very dense.	GM	Refusal at 6 ½ ft bgs.	0.0
8								6 in. air hammer	
10									
12					BED-ROCK			Driller notes competent rock at 12 ft.	
14									

TYPE OF DRILLING RIG:	Dietrich D-120
METHOD OF ADVANCING BORING:	6 in HSA
METHOD OF SOIL SAMPLING:	2 in ID, 24 in long split spoon
METHOD OF ROCK CORING:	6 in. air hammer
GROUNDWATER LEVELS:	22.80 ft bgs
OTHER OBSERVATIONS:	

Note:
S = Screening
HS = Headspace
EOB = End of Boring

Tetra Tech NUS, Inc.

BORING NO.: MW-127B

TtNUS Form 0018

BORING LOG FOR:	Supplemental RI, Site 08, NAVSTA Newport			BORING NO.:	MW-127B
PROJECT NO.:	112G02124			START DATE:	7/9/10
LOGGED BY:	A Carey / R.Clark	TRANSCRIBED BY:	R. Clark	COMPLETION: DATE:	7/12/10
DRILLED BY (Company/Driller):	CDS / T. Martinelli			MON. WELL NO.:	MW-127B
GRD. SURFACE ELEVATION:	43.2 ft	ELEVATION FROM:	NGVD 1929	CHECKED BY:	D. Seiken

DEPTH (FEET)	WELL DIAGRAM	BLOWS PER 6"	SAMP REC. / SAMP LENG.	SAMPLING TIME & SAMPLE NO. (QA/QC STATUS)	DEPTH MAT'L CHG./ WELL PROF'L	MATERIAL CLASSIFICATION	USCS	REMARKS (moisture condition; odors; geological classification; rock weathering; etc.)	PID FIELD SCREENING DATA *METHOD* = [PID, (PPM)]
					BED-ROCK				
16									
18								6 in. steel casing grouted in place at 18 ft bgs.	
20									
22									
						Blue-gray rock dust, very small rock fragments, dry			
24									
26									
28						Blue-gray rock dust, very small rock fragments, dry			

TYPE OF DRILLING RIG:	Dietrich D-120
METHOD OF ADVANCING BORING:	6 in HSA
METHOD OF SOIL SAMPLING:	2 in ID, 24 in long split spoon
METHOD OF ROCK CORING:	6 in. air hammer
GROUNDWATER LEVELS:	22.80 ft bgs
OTHER OBSERVATIONS:	

Note:
S = Screening
HS = Headspace
EOB = End of Boring

Tetra Tech NUS, Inc.

BORING NO.: MW-127B

TtNUS Form 0018

BORING LOG FOR:	Supplemental RI, Site 08, NAVSTA Newport			BORING NO.:	MW-127B
PROJECT NO.:	112G02124			START DATE:	7/9/10
LOGGED BY:	A Carey / R.Clark	TRANSCRIBED BY:	R. Clark	COMPLETION: DATE:	7/12/10
DRILLED BY (Company/Driller):	CDS / T. Martinelli			MON. WELL NO.:	MW-127B
GRD. SURFACE ELEVATION:	43.2 ft	ELEVATION FROM:	NGVD 1929	CHECKED BY:	D. Seiken

DEPTH (FEET)	WELL DIAGRAM	BLOWS PER 6"	SAMP REC. / SAMP LENG.	SAMPLING TIME & SAMPLE NO. (QA/QC STATUS)	DEPTH MAT'L CHG./ WELL PROF'L	MATERIAL CLASSIFICATION	USCS	REMARKS (moisture condition; odors; geological classification; rock weathering; etc.)	PID FIELD SCREENING DATA *METHOD* = [PID, (PPM)]
					BED-ROCK				
30									
32									
						Blue-gray rock dust, very small rock fragments, dry			
34									
36									
38						Blue-gray rock dust, very small rock fragments, dry			
40									
42									
						Blue-gray rock dust, very small rock fragments, dry			

TYPE OF DRILLING RIG:	Dietrich D-120
METHOD OF ADVANCING BORING:	6 in HSA
METHOD OF SOIL SAMPLING:	2 in ID, 24 in long split spoon
METHOD OF ROCK CORING:	6 in. air hammer
GROUNDWATER LEVELS:	22.80 ft bgs
OTHER OBSERVATIONS:	

Note:
S = Screening
HS = Headspace
EOB = End of Boring

Tetra Tech NUS, Inc.

BORING NO.: MW-127B

TtNUS Form 0018

BORING LOG FOR:	Supplemental RI, Site 08, NAVSTA Newport			BORING NO.:	MW-127B
PROJECT NO.:	112G02124			START DATE:	7/9/10
LOGGED BY:	A Carey / R.Clark	TRANSCRIBED BY:	R. Clark	COMPLETION: DATE:	7/12/10
DRILLED BY (Company/Driller):	CDS / T. Martinelli			MON. WELL NO.:	MW-127B
GRD. SURFACE ELEVATION:	43.2 ft	ELEVATION FROM:	NGVD 1929	CHECKED BY:	D. Seiken

DEPTH (FEET)	WELL DIAGRAM	BLOWS PER 6"	SAMP REC. / SAMP LENG.	SAMPLING TIME & SAMPLE NO. (QA/QC STATUS)	DEPTH MAT'L CHG./ WELL PROF'L	MATERIAL CLASSIFICATION	USCS	REMARKS (moisture condition; odors; geological classification; rock weathering; etc.)	PID FIELD SCREENING DATA *METHOD* = [PID, (PPM)]
				BED-ROCK		Blue-gray rock dust, very small rock fragments, wet.		Making approx. 40 gal/min at 44 ft.	
46						End of boring at 46 ft bgs.			
48									
50									
52									
54									
56									
58									

TYPE OF DRILLING RIG:	Dietrich D-120		*Tetra Tech NUS, Inc.*
METHOD OF ADVANCING BORING:	6 in HSA	Note:	
METHOD OF SOIL SAMPLING:	2 in ID, 24 in long split spoon	S = Screening	
METHOD OF ROCK CORING:	6 in. air hammer	HS = Headspace	
GROUNDWATER LEVELS:	22.80 ft bgs	EOB = End of Boring	
OTHER OBSERVATIONS:		BORING NO.: MW-127B	PAGE: 4 OF 4

TtNUS Form 0018

BORING LOG FOR:	Supplemental RI, Site 08, NAVSTA Newport		
PROJECT NO.:	112G02124	BORING NO.:	MW-128B
LOGGED BY:	A.Carey / R.Clark	START DATE:	7/12/10
TRANSCRIBED BY:	R. Clark	COMPLETION: DATE:	7/14/10
DRILLED BY (Company/Driller):	CDS / T. Martinelli	MON. WELL NO.:	MW-128B
GRD. SURFACE ELEVATION:	45.9	CHECKED BY:	D. Seiken
ELEVATION FROM:	NGVD 1929		

DEPTH (FEET)	WELL DIAGRAM	BLOWS PER 6"	SAMP REC. / SAMP LENG.	SAMPLING TIME & SAMPLE NO. (QA/QC STATUS)	DEPTH MAT'L CHG./ WELL PROF'L	MATERIAL CLASSIFICATION	USCS	REMARKS (moisture condition; odors; geological classification; rock weathering; etc.)	PID FIELD SCREENING DATA *METHOD* = [PID, (PPM) HEADSPACE]
		7	16/24	0-2	SAND	Light brown fine SAND and SILT, trace clay and rock fragments, dry, loose.	SM		0.8
		11			SILT				
		14							
		12							
2		8	19/24	2-4	SAND	0-6 in. Light brown fine to coarse SAND, little silt and gravel, dry, loose to medium dense.	SW		11.3
		12			SILT	6-19 in. light brown/gray fine to coarse SAND, little silt and gravel, dry, medium dense.	SW		
		19			GRAVEL				
		21							
4		17	17/24	4-6		0-6 in. Light brown fine to coarse SAND, some silt, little gravel, trace clay, iron staining,	SW		13.2
		22				6-17 in. gray fine to coarse SAND, some silt and rock fragments (phyllite), dry, medium	SW		
		14				Dense.			
		20							
6		21	21/24	6-8		Same as above	SW		5.3
		47							
		30							
		36							
8		40	15/24	8-10	WTHR BED-	Gray ROCK fragments, little silt and fine to coarse sand, dry, dense.			0.9
		45			ROCK				
		62							
		100/4							
10					BED-			Driller notes competent rock at 10 ft. 6 in. air hammer,	
					ROCK				
12									
14									

TYPE OF DRILLING RIG:	Dietrich D-120
METHOD OF ADVANCING BORING:	6 in HSA
METHOD OF SOIL SAMPLING:	2 in ID, 24 in long split spoon
METHOD OF ROCK CORING:	6 in. air hammer
GROUNDWATER LEVELS:	24.65 ft
OTHER OBSERVATIONS:	

Note:
S = Screening
HS = Headspace
EOB = End of Boring

Tetra Tech NUS, Inc.

BORING NO.: MW-128B

TtNUS Form 0018

BORING LOG FOR:	Supplemental RI, Site 08, NAVSTA Newport			BORING NO.:	MW-128B
PROJECT NO.:	112G02124			START DATE:	7/12/10
LOGGED BY:	A.Carey / R.Clark	TRANSCRIBED BY:	R. Clark	COMPLETION: DATE:	7/14/10
DRILLED BY (Company/Driller):	CDS / T. Martinelli			MON. WELL NO.:	MW-128B
GRD. SURFACE ELEVATION:	45.9	ELEVATION FROM:	NGVD 1929	CHECKED BY:	D. Seiken

DEPTH (FEET)	WELL DIAGRAM	BLOWS PER 6"	SAMP REC. / SAMP LENG.	SAMPLING TIME & SAMPLE NO. (QA/QC STATUS)	DEPTH MAT'L CHG./ WELL PROF'L	MATERIAL CLASSIFICATION	USCS	REMARKS (moisture condition; odors; geological classification; rock weathering; etc.)	PID FIELD SCREENING DATA *METHOD* = [PID, (PPM) HEADSPACE]
16									
18								6 in. steel casing grouted in place at 18 ft bgs.	
20									
22									
						Brown cuttings, dry			
24									
26									
28						Brown cuttings, dry			

TYPE OF DRILLING RIG:	Dietrich D-120	Note:	*Tetra Tech NUS, Inc.*
METHOD OF ADVANCING BORING:	6 in HSA	S = Screening	
METHOD OF SOIL SAMPLING:	2 in ID, 24 in long split spoon	HS = Headspace	
METHOD OF ROCK CORING:	6 in. air hammer	EOB = End of Boring	
GROUNDWATER LEVELS:	24.65 ft		
OTHER OBSERVATIONS:		BORING NO.: MW-128B	PAGE: 2 OF 4

TtNUS Form 0018

BORING LOG FOR:	Supplemental RI, Site 08, NAVSTA Newport			BORING NO.:	MW-128B
PROJECT NO.:	112G02124			START DATE:	7/12/10
LOGGED BY:	A.Carey / R.Clark	TRANSCRIBED BY:	R. Clark	COMPLETION: DATE:	7/14/10
DRILLED BY (Company/Driller):	CDS / T. Martinelli			MON. WELL NO.:	MW-128B
GRD. SURFACE ELEVATION:	45.9	ELEVATION FROM:	NGVD 1929	CHECKED BY:	D. Seiken

DEPTH (FEET)	WELL DIAGRAM	BLOWS PER 6"	SAMP REC. / SAMP LENG.	SAMPLING TIME & SAMPLE NO. (QA/QC STATUS)	DEPTH MAT'L CHG./ WELL PROF'L	MATERIAL CLASSIFICATION	USCS	REMARKS (moisture condition; odors; geological classification; rock weathering; etc.)	PID FIELD SCREENING DATA *METHOD* = [PID, (PPM) HEADSPACE]
	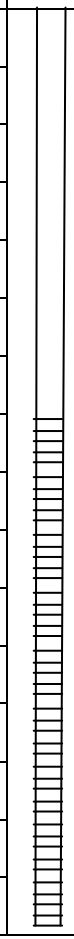								
30									
32						Gray cuttings, dry			
34									
36									
38						Gray cuttings, dry			
40								Driller observes a seam and water at 40-41 ft	
42						Gray cuttings, wet			

TYPE OF DRILLING RIG:	Dietrich D-120	Note:	*Tetra Tech NUS, Inc.*
METHOD OF ADVANCING BORING:	6 in HSA	S = Screening	
METHOD OF SOIL SAMPLING:	2 in ID, 24 in long split spoon	HS = Headspace	
METHOD OF ROCK CORING:	6 in. air hammer	EOB = End of Boring	
GROUNDWATER LEVELS:	24.65 ft		
OTHER OBSERVATIONS:		BORING NO.: MW-128B	PAGE: 3 OF 4

TtNUS Form 0018

BORING LOG FOR:	Supplemental RI, Site 08, NAVSTA Newport			BORING NO.:	MW-128B
PROJECT NO.:	112G02124			START DATE:	7/12/10
LOGGED BY:	A.Carey / R.Clark	TRANSCRIBED BY:	R. Clark	COMPLETION: DATE:	7/14/10
DRILLED BY (Company/Driller):	CDS / T. Martinelli			MON. WELL NO.:	MW-128B
GRD. SURFACE ELEVATION:	45.9	ELEVATION FROM:	NGVD 1929	CHECKED BY:	D. Seiken

DEPTH (FEET)	WELL DIAGRAM	BLOWS PER 6"	SAMP REC. / SAMP LENG.	SAMPLING TIME & SAMPLE NO. (QA/QC STATUS)	DEPTH MAT'L CHG./ WELL PROF'L	MATERIAL CLASSIFICATION	USCS	REMARKS (moisture condition; odors; geological classification; rock weathering; etc.)	PID FIELD SCREENING DATA *METHOD* = [PID, (PPM) HEADSPACE]
46									
48						Gray cuttings, wet			
50									
						End of boring 51 ft.		Blow test = 55 gal / 5 min.	
52									
54									
56									
58									

TYPE OF DRILLING RIG:	Dietrich D-120		*Tetra Tech NUS, Inc.*
METHOD OF ADVANCING BORING:	6 in HSA	Note:	
METHOD OF SOIL SAMPLING:	2 in ID, 24 in long split spoon	S = Screening	
METHOD OF ROCK CORING:	6 in. air hammer	HS = Headspace	
GROUNDWATER LEVELS:	24.65 ft	EOB = End of Boring	
OTHER OBSERVATIONS:		BORING NO.: MW-128B	PAGE: 4 OF 4

TtNUS Form 0018

BORING LOG FOR:	Supplemental RI, Site 08, NAVSTA Newport		
PROJECT NO.:	112G02124	BORING NO.:	MW-129B
LOGGED BY:	R.Clark	START DATE:	7/14/10
DRILLED BY (Company/Driller):	CDS / T. Martinelli	TRANSCRIBED BY: R. Clark	COMPLETION: DATE: 7/19/10
GRD. SURFACE ELEVATION:	53.0	ELEVATION FROM: NGVD 1929	MON. WELL NO.: MW-129B
			CHECKED BY: D. Seiken

DEPTH (FEET)	WELL DIAGRAM	BLOWS PER 6"	SAMP REC. / SAMP LENG.	SAMPLING TIME & SAMPLE NO. (QA/QC STATUS)	DEPTH MAT'L CHG./ WELL PROF'L	MATERIAL CLASSIFICATION	USCS	REMARKS (moisture condition; odors; geological classification; rock weathering; etc.)	PID FIELD SCREENING DATA *METHOD* = [PID, (PPM) HEADSPACE]
	Open Hole To 58 ft bgs	3	14/24	0-2	SILT	Brown SILT, some coarse sand and subangular gravel (up to ¾ in.), dry, very loose.	ML		0.0
		5							
		5							
		3							
2		3	16/24	2-4		0-2 in. Same as above.	ML		0.0
		8			SAND	2-8 in. Yellowish gray very fine SAND, dry, loose.	SP		
		14				8-12 in. Orange/brown fine to coarse SAND, some pea gravel, dry, medium dense.	SW		
		27			WTHR	12-16 in. Gray platy weathered ROCK (phyllite), some fine to medium sand, dry, dense.			
4		36	9/9	4-6	BED-	0-4 in. same as above			0.0
		100/3			ROCK	4-9 in. Gray PHYLLITE, less weathered, dry, very dense.			
6								Split spoon refusal at 6 ft Air hammer to 8 ft, grouted 4 in. casing into place	
8					BED-			7/19/2010 4 in air hammer from 8 ft, gray cuttings	
					ROCK				
10									
12									
						gray cuttings, dry			
14									

TYPE OF DRILLING RIG:	Dietrich D-120	Note:	*Tetra Tech NUS, Inc.*
METHOD OF ADVANCING BORING:	6 in HSA	S = Screening	
METHOD OF SOIL SAMPLING:	2 in ID, 24 in long split spoon	HS = Headspace	
METHOD OF ROCK CORING:	4 in. air hammer	EOB = End of Boring	
GROUNDWATER LEVELS:	4.85 ft		
OTHER OBSERVATIONS:		BORING NO.: MW-129B	PAGE: 1 OF 4

TtNUS Form 0018

BORING LOG FOR:	Supplemental RI, Site 08, NAVSTA Newport			BORING NO.:	MW-129B
PROJECT NO.:	112G02124			START DATE:	7/14/10
LOGGED BY:	R.Clark	TRANSCRIBED BY:	R. Clark	COMPLETION: DATE:	7/19/10
DRILLED BY (Company/Driller):	CDS / T. Martinelli			MON. WELL NO.:	MW-129B
GRD. SURFACE ELEVATION:	53.0	ELEVATION FROM:	NGVD 1929	CHECKED BY:	D. Seiken

DEPTH (FEET)	WELL DIAGRAM	BLOWS PER 6"	SAMP REC. / SAMP LENG.	SAMPLING TIME & SAMPLE NO. (QA/QC STATUS)	DEPTH MAT'L CHG./ WELL PROF'L	MATERIAL CLASSIFICATION	USCS	REMARKS (moisture condition; odors; geological classification; rock weathering; etc.)	PID FIELD SCREENING DATA *METHOD* = [PID, (PPM) HEADSPACE]
	Open Hole To 58 ft bgs								
16									
18						Gray cuttings, dry			
20									
22									
						Gray cuttings, dry		Seam at 23 ½ ft, water	
24									
26									
28						Gray cuttings, wet			

TYPE OF DRILLING RIG:	Dietrich D-120
METHOD OF ADVANCING BORING:	6 in HSA
METHOD OF SOIL SAMPLING:	2 in ID, 24 in long split spoon
METHOD OF ROCK CORING:	4 in. air hammer
GROUNDWATER LEVELS:	4.85 ft
OTHER OBSERVATIONS:	

Note:
S = Screening
HS = Headspace
EOB = End of Boring

Tetra Tech NUS, Inc.

BORING NO.: MW-129B

TtNUS Form 0018

BORING LOG FOR:	Supplemental RI, Site 08, NAVSTA Newport			BORING NO.:	MW-129B
PROJECT NO.:	112G02124			START DATE:	7/14/10
LOGGED BY:	R.Clark	TRANSCRIBED BY:	R. Clark	COMPLETION: DATE:	7/19/10
DRILLED BY (Company/Driller):	CDS / T. Martinelli			MON. WELL NO.:	MW-129B
GRD. SURFACE ELEVATION:	53.0	ELEVATION FROM:	NGVD 1929	CHECKED BY:	D. Seiken

DEPTH (FEET)	WELL DIAGRAM	BLOWS PER 6"	SAMP REC. / SAMP LENG.	SAMPLING TIME & SAMPLE NO. (QA/QC STATUS)	DEPTH MAT'L CHG./ WELL PROF'L	MATERIAL CLASSIFICATION	USCS	REMARKS (moisture condition; odors; geological classification; rock weathering; etc.)	PID FIELD SCREENING DATA *METHOD* = [PID, (PPM) HEADSPACE]
	Open Hole To 58 ft bgs								
30									
32									
						Gray cuttings, wet			
34									
36									
38						Gray cuttings, wet			
40									
42									
						Gray cuttings, wet			

TYPE OF DRILLING RIG:	Dietrich D-120	Note:	*Tetra Tech NUS, Inc.*
METHOD OF ADVANCING BORING:	6 in HSA	S = Screening	
METHOD OF SOIL SAMPLING:	2 in ID, 24 in long split spoon	HS = Headspace	
METHOD OF ROCK CORING:	4 in. air hammer	EOB = End of Boring	
GROUNDWATER LEVELS:	4.85 ft		
OTHER OBSERVATIONS:		BORING NO.: MW-129B	PAGE: 3 OF 4

TtNUS Form 0018

BORING LOG FOR:	Supplemental RI, Site 08, NAVSTA Newport			BORING NO.:	MW-129B
PROJECT NO.:	112G02124			START DATE:	7/14/10
LOGGED BY:	R.Clark	TRANSCRIBED BY:	R. Clark	COMPLETION: DATE:	7/19/10
DRILLED BY (Company/Driller):	CDS / T. Martinelli			MON. WELL NO.:	MW-129B
GRD. SURFACE ELEVATION:	53.0	ELEVATION FROM:	NGVD 1929	CHECKED BY:	D. Seiken

DEPTH (FEET)	WELL DIAGRAM	BLOWS PER 6"	SAMP REC. / SAMP LENG.	SAMPLING TIME & SAMPLE NO. (QA/QC STATUS)	DEPTH MAT'L CHG./ WELL PROF'L	MATERIAL CLASSIFICATION	USCS	REMARKS (moisture condition; odors; geological classification; rock weathering; etc.)	PID FIELD SCREENING DATA *METHOD* = [PID, (PPM) HEADSPACE]
	Open Hole To 58 ft bgs								
46									
48						Gray cuttings, wet			
50									
52									
54									
56									
58						Gray cuttings, wet. End of boring 58 ft bgs.		Blow test = 80 gal/15 minutes.	

TYPE OF DRILLING RIG:	Dietrich D-120		*Tetra Tech NUS, Inc.*
METHOD OF ADVANCING BORING:	6 in HSA	Note:	
METHOD OF SOIL SAMPLING:	2 in ID, 24 in long split spoon	S = Screening	
METHOD OF ROCK CORING:	4 in. air hammer	HS = Headspace	
GROUNDWATER LEVELS:	4.85 ft	EOB = End of Boring	
OTHER OBSERVATIONS:		BORING NO.: MW-129B	PAGE: 4 OF 4

TtNUS Form 0018

BORING LOG FOR:	Supplemental RI, Site 08, NAVSTA Newport			BORING NO.:	MW-130B
PROJECT NO.:	112G02124			START DATE:	7/15/10
LOGGED BY:	R.Clark	TRANSCRIBED BY:	R. Clark	COMPLETION: DATE:	7/19/10
DRILLED BY (Company/Driller):	CDS / T. Martinelli			MON. WELL NO.:	MW-130B
GRD. SURFACE ELEVATION:	44.8 ft	ELEVATION FROM:	NGVD 1929	CHECKED BY:	D. Seiken

DEPTH (FEET)	DEPTH OF AUGERS OR CASING	BLOWS PER 6"	SAMP REC. / SAMP LENG.	SAMPLING TIME & SAMPLE NO. (QA/QC STATUS)	DEPTH MAT'L CHG./ WELL PROF'L	MATERIAL CLASSIFICATION	USCS	REMARKS (moisture condition; odors; geological classification; rock weathering; etc.)	PID FIELD SCREENING DATA *METHOD* = [PID, (PPM)] HEADSPACE
	Open Hole To 60.5 ft bgs	3	9/24	0-2	SILT	0-1 in. Brown top soil	ML		
		3				Brown SILT, some fine to coarse sand and platy gravel, dry, very loose.	ML		0.0
		3							
		3							
2		2	20/24	2-4	SAND	Brown very fine to fine SAND, trace medium sand and silt, dry, very loose.	SP		
		2							0.0
		4							
		6							
4		21	22/16	4-5.3	WTHR BED-ROCK	Gray platy weathered PHYLLITE, very dense.			0.0
		75							
		100/4							
6									
8									
					BED-ROCK				
						Weathered bedrock to 8 ½ ft, then competent rock,			
10								4 in. casing grouted in place at 10 ½ ft.	
						4 in. air hammer, Gray cuttings, dry			
12									
14									

TYPE OF DRILLING RIG:	Dietrich D-120	Note:	*Tetra Tech NUS, Inc.*
METHOD OF ADVANCING BORING:	6 in. HSA	S = Screening	
METHOD OF SOIL SAMPLING:	2 in. ID, 24 in. long split spoon	HS = Headspace	
METHOD OF ROCK CORING:	4 in. air hammer	EOB = End of Boring	
GROUNDWATER LEVELS:	6.6 ft		
OTHER OBSERVATIONS:		BORING NO.: MW-130B	PAGE: 1 OF 5

TtNUS Form 0018

BORING LOG FOR:	Supplemental RI, Site 08, NAVSTA Newport			BORING NO.:	MW-130B
PROJECT NO.:	112G02124			START DATE:	7/15/10
LOGGED BY:	R.Clark	TRANSCRIBED BY:	R. Clark	COMPLETION: DATE:	7/19/10
DRILLED BY (Company/Driller):	CDS / T. Martinelli			MON. WELL NO.:	MW-130B
GRD. SURFACE ELEVATION:	44.8 ft	ELEVATION FROM:	NGVD 1929	CHECKED BY:	D. Seiken

DEPTH (FEET)	DEPTH OF AUGERS OR CASING	BLOWS PER 6"	SAMP REC. / SAMP LENG.	SAMPLING TIME & SAMPLE NO. (QA/QC STATUS)	DEPTH MAT'L CHG./ WELL PROF'L	MATERIAL CLASSIFICATION	USCS	REMARKS (moisture condition; odors; geological classification; rock weathering; etc.)	PID FIELD SCREENING DATA *METHOD* = [PID, (PPM)]
	Open Hole To 60.5 ft bgs								
						Gray cuttings, dry			
16									
18									
20						Gray cuttings, dry			
22									
24									
						Gray cuttings, dry			
26									
28									

TYPE OF DRILLING RIG:	Dietrich D-120	Note:	*Tetra Tech NUS, Inc.*
METHOD OF ADVANCING BORING:	6 in. HSA	S = Screening	
METHOD OF SOIL SAMPLING:	2 in. ID, 24 in. long split spoon	HS = Headspace	
METHOD OF ROCK CORING:	4 in. air hammer	EOB = End of Boring	
GROUNDWATER LEVELS:	6.6 ft		
OTHER OBSERVATIONS:		BORING NO.: MW-130B	PAGE: 2 OF 5

BORING LOG FOR:	Supplemental RI, Site 08, NAVSTA Newport			BORING NO.:	MW-130B
PROJECT NO.:	112G02124			START DATE:	7/15/10
LOGGED BY:	R.Clark	TRANSCRIBED BY:	R. Clark	COMPLETION: DATE:	7/19/10
DRILLED BY (Company/Driller):	CDS / T. Martinelli			MON. WELL NO.:	MW-130B
GRD. SURFACE ELEVATION:	44.8 ft	ELEVATION FROM:	NGVD 1929	CHECKED BY:	D. Seiken

DEPTH (FEET)	DEPTH OF AUGERS OR CASING	BLOWS PER 6"	SAMP REC. / SAMP LENG.	SAMPLING TIME & SAMPLE NO. (QA/QC STATUS)	DEPTH MAT'L CHG./ WELL PROF'L	MATERIAL CLASSIFICATION	USCS	REMARKS (moisture condition; odors; geological classification; rock weathering; etc.)	PID FIELD SCREENING DATA *METHOD* = [PID, (PPM)]
	Open Hole To 60.5 ft bgs								
30						Gray cuttings, dry		Seam at 30 ½ ft, brown water	
32									
34									
						Gray cuttings, brown water			
36									
38									
40						Gray cuttings, brown water			
42									

TYPE OF DRILLING RIG:	Dietrich D-120	Note:	*Tetra Tech NUS, Inc.*
METHOD OF ADVANCING BORING:	6 in. HSA	S = Screening	
METHOD OF SOIL SAMPLING:	2 in. ID, 24 in. long split spoon	HS = Headspace	
METHOD OF ROCK CORING:	4 in. air hammer	EOB = End of Boring	
GROUNDWATER LEVELS:	6.6 ft		
OTHER OBSERVATIONS:		BORING NO.: MW-130B	PAGE: 3 OF 5

BORING LOG FOR:	Supplemental RI, Site 08, NAVSTA Newport			BORING NO.:	MW-130B
PROJECT NO.:	112G02124			START DATE:	7/15/10
LOGGED BY:	R.Clark	TRANSCRIBED BY:	R. Clark	COMPLETION: DATE:	7/19/10
DRILLED BY (Company/Driller):	CDS / T. Martinelli			MON. WELL NO.:	MW-130B
GRD. SURFACE ELEVATION:	44.8 ft	ELEVATION FROM:	NGVD 1929	CHECKED BY:	D. Seiken

DEPTH (FEET)	DEPTH OF AUGERS OR CASING	BLOWS PER 6"	SAMP REC. / SAMP LENG.	SAMPLING TIME & SAMPLE NO. (QA/QC STATUS)	DEPTH MAT'L CHG./ WELL PROF'L	MATERIAL CLASSIFICATION	USCS	REMARKS (moisture condition; odors; geological classification; rock weathering; etc.)	PID FIELD SCREENING DATA *METHOD* = [PID, (PPM)]
	Open Hole To 60.5 ft bgs								
44									
						Gray cuttings, brown water			
46									
48									
50						Gray cuttings, brown water			
52									
54									
						Gray cuttings, brown water			
56									

TYPE OF DRILLING RIG:	Dietrich D-120	Note:	*Tetra Tech NUS, Inc.*
METHOD OF ADVANCING BORING:	6 in. HSA	S = Screening	
METHOD OF SOIL SAMPLING:	2 in. ID, 24 in. long split spoon	HS = Headspace	
METHOD OF ROCK CORING:	4 in. air hammer	EOB = End of Boring	
GROUNDWATER LEVELS:	6.6 ft		
OTHER OBSERVATIONS:		BORING NO.: MW-130B	PAGE: 4 OF 5

BORING LOG FOR:	Supplemental RI, Site 08, NAVSTA Newport			BORING NO.:	MW-130B
PROJECT NO.:	112G02124			START DATE:	7/15/10
LOGGED BY:	R.Clark	TRANSCRIBED BY:	R. Clark	COMPLETION: DATE:	7/19/10
DRILLED BY (Company/Driller):	CDS / T. Martinelli			MON. WELL NO.:	MW-130B
GRD. SURFACE ELEVATION:	44.8 ft	ELEVATION FROM:	NGVD 1929	CHECKED BY:	D. Seiken

DEPTH (FEET)	DEPTH OF AUGERS OR CASING	BLOWS PER 6"	SAMP REC. / SAMP LENG.	SAMPLING TIME & SAMPLE NO. (QA/QC STATUS)	DEPTH MAT'L CHG./ WELL PROF'L	MATERIAL CLASSIFICATION	USCS	REMARKS (moisture condition; odors; geological classification; rock weathering; etc.)	PID FIELD SCREENING DATA *METHOD* = [PID, (PPM)]
	Open Hole To 60.5 ft bgs								
58									
60						Gray cuttings, brown water 60 ½ ft end of boring.		Blow test = 5 gal/min	
62									
64									
66									
68									
70									

TYPE OF DRILLING RIG:	Dietrich D-120	Note:	*Tetra Tech NUS, Inc.*
METHOD OF ADVANCING BORING:	6 in. HSA	S = Screening	
METHOD OF SOIL SAMPLING:	2 in. ID, 24 in. long split spoon	HS = Headspace	
METHOD OF ROCK CORING:	4 in. air hammer	EOB = End of Boring	
GROUNDWATER LEVELS:	6.6 ft		
OTHER OBSERVATIONS:		BORING NO.: MW-130B	PAGE: 5 OF 5

TtNUS Form 0018

BEDROCK MONITORING WELL CONSTRUCTION LOG — TETRA TECH NUS, INC. — TtNUS form 0060

PROJECT NAME: Supplemental RI
PROJECT LOCATION: NAVSTA Newport
CLIENT: Navy
CONTRACTOR: CDS
LOGGED BY: ADC
CHECKED BY: D Seiken
DRILLER: T Martinelli
DATE: 7/13/10 7/20/10
DATE: 10/19/10

PROJECT NO: 112G02124
WELL NO: MW-116B-D1
BORING NO: 116B-D1
BORING LOCATION:
N: 165172.92
E: 381314.96
PAGE: 1 OF 1

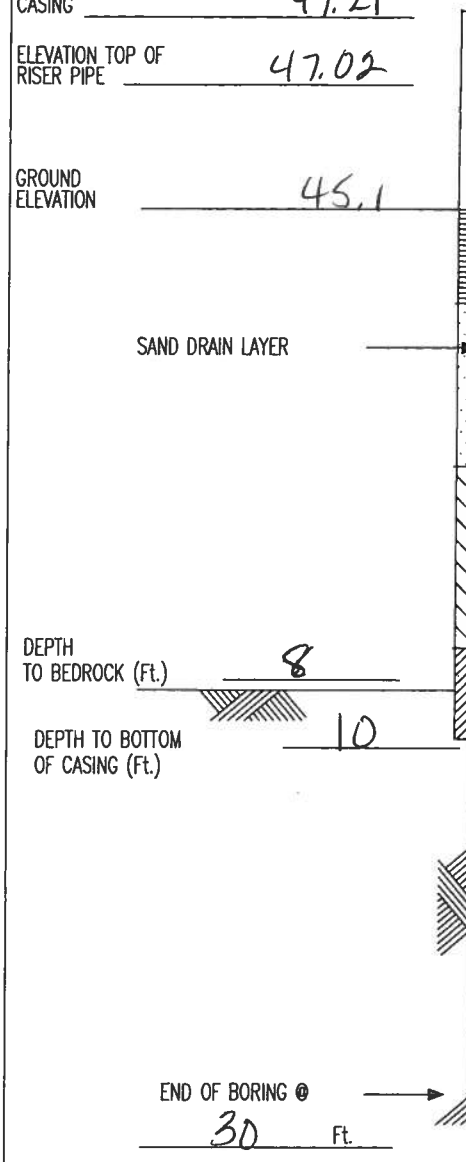

ELEVATION TOP OF PROTECTIVE CASING	47.21
ELEVATION TOP OF RISER PIPE	47.02
GROUND ELEVATION	45.1
LENGTH OF PROTECTIVE CASING ABOVE GROUND SURFACE (Ft.)	2.11
LENGTH OF RISER PIPE ABOVE GROUND SURFACE (Ft.)	1.92
TYPE OF SURFACE SEAL	cement
DIA. SURFACE SEAL BGS (In.)	24 x 24
DEPTH TO BOTTOM OF SURFACE SEAL (Ft.)	1/2
I.D. OF PROTECTIVE CASING (In.)	4
TYPE OF CASING	Steel
DEPTH BOTTOM OF DRAIN LAYER (Ft.)	5
RISER PIPE (In.) I.D.: 1 1/2 O.D.: 1 7/8	
TYPE OF RISER PIPE	PVC
TYPE OF BACKFILL AROUND RISER PIPE	bentonite
DEPTH TOP OF SEAL (Ft.)	5
TYPE OF SEAL	bentonite
DEPTH BOTTOM OF SEAL (Ft.)	12
DEPTH TOP OF PERVIOUS SECTION (Ft.)	14
DIAMETER OF BOREHOLE (In.)	4
TYPE OF PERVIOUS SECTION	PVC
TYPE OF OPENINGS	slotted 0.010
PERVIOUS SECTION (In.) I.D.: 1 1/2 O.D.: 1 7/8	
TYPE OF FILTER PACK AROUND PERVIOUS SECTION	#0 Sand
DEPTH BOTTOM OF PERVIOUS SECTION (Ft.)	29
DEPTH BOTTOM OF FILTER PACK (Ft.)	30

GENERAL NOTE:

1. Entry of 0.00 for Ground Elevation, Elev. Top of Riser Pipe & Elev. Top of Protective Casing Indicates that Surveyed Ground Elevation Not Available.

WELL NO.: MW-116B

Tetra Tech NUS, Inc.

BEDROCK
MONITORING WELL SHEET
OPEN HOLE WELL

PROJECT NUSC Disposal Area	LOCATION North Meadow	DRILLER Geosearch
PROJECT NO. 112G00933	BORING B116B	DRILLING METHOD HSA/HQ Wireline/Hammer Air
DATE BEGUN 04/01/08	DATE COMPLETED 04/02/08	
FIELD GEOLOGIST M. Alroy		DEVELOPMENT METHOD Whale
GROUND ELEVATION 45.7	DATUM NGVD	

ACAD: FORM_MWOHW.dwg 07/28/99 INL

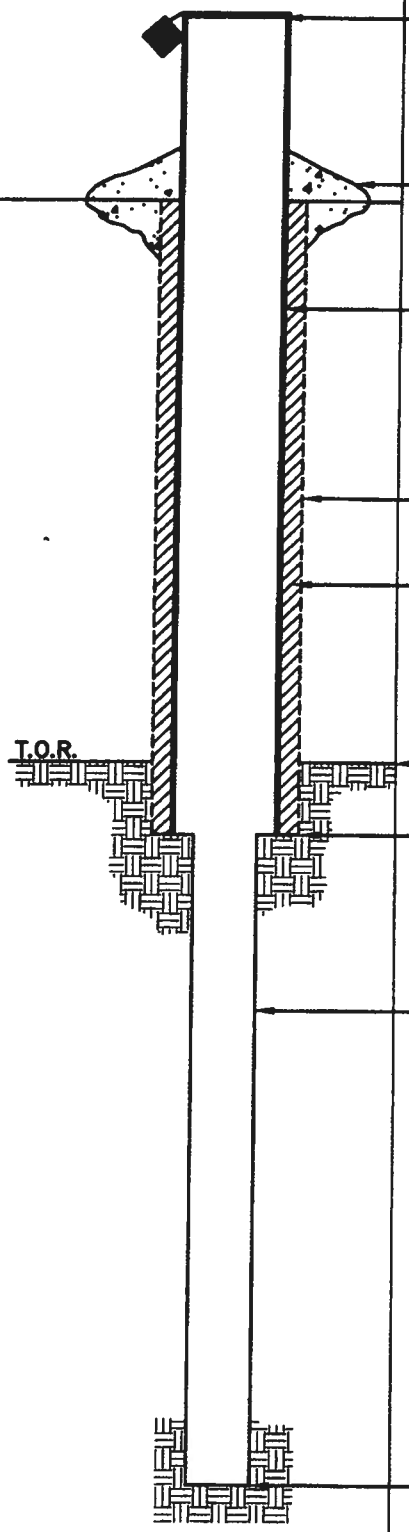

ELEVATION/HEIGHT OF TOP OF SURFACE CASING: 47.83'/2.13'

modified 7/16/10 - see next pg.

TYPE OF SURFACE SEAL: Concrete

I.D. OF CASING: 4"

TYPE OF CASING: Steel

TEMP./PERM.: Permanant

DIAMETER OF HOLE: 7.25"

TYPE OF CASING SEAL: Bentonite

DEPTH TO TOP OF ROCK: 5.25'

DEPTH TO BOTTOM CASING: 10'

DIAMETER OF HOLE IN BEDROCK: 3.7"

DESCRIBE IF CORE/REAMED WITH BIT: N/A

DESCRIBE JOINTS IN BEDROCK AND DEPTH: N/A

ELEVATION/DEPTH OF HOLE: 5.7'/40'

BEDROCK MONITORING WELL CONSTRUCTION LOG — TETRA TECH NUS, INC. — TtNUS form 0060

PROJECT NAME: Supplemental RI
PROJECT LOCATION: NAVSTA Newport
CLIENT: Navy
CONTRACTOR: CDS
DRILLER: T Martinelli
LOGGED BY: RC
DATE: 7/16/10
CHECKED BY: D Seiken
DATE: 10/19/10

PROJECT NO: 112G02124
WELL NO: MW-116B-D2
BORING NO: 116B
BORING LOCATION:
N: 165175.33
E: 351319.22
PAGE: 1 OF 1

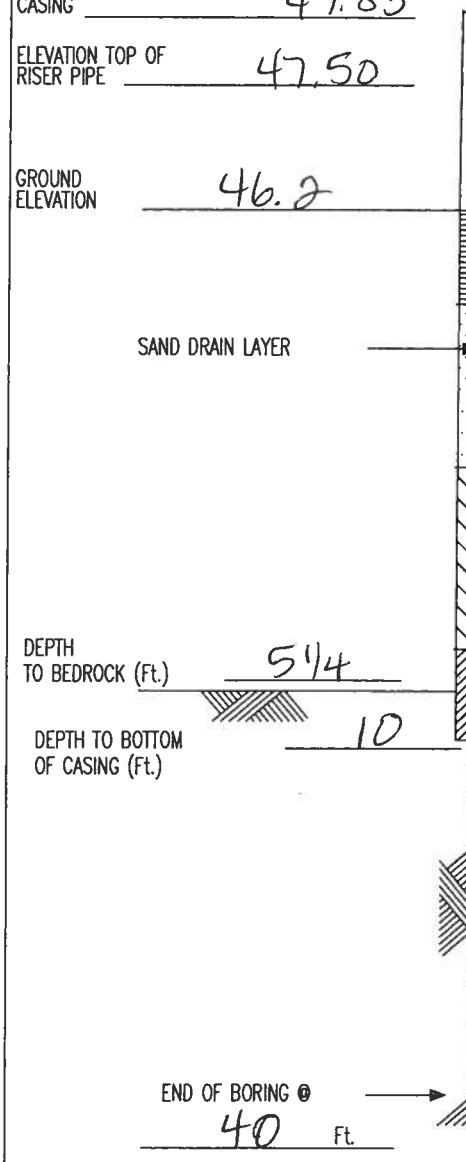

ELEVATION TOP OF PROTECTIVE CASING	47.83
ELEVATION TOP OF RISER PIPE	47.50
GROUND ELEVATION	46.2
LENGTH OF PROTECTIVE CASING ABOVE GROUND SURFACE (Ft.)	1.63
LENGTH OF RISER PIPE ABOVE GROUND SURFACE (Ft.)	1.3
TYPE OF SURFACE SEAL	cement
DIA. SURFACE SEAL BGS (In.)	24 x 24
DEPTH TO BOTTOM OF SURFACE SEAL (Ft.)	1/2
I.D. OF PROTECTIVE CASING (In.)	4
TYPE OF CASING	Steel
DEPTH BOTTOM OF DRAIN LAYER (Ft.)	5
RISER PIPE (In.) I.D.: 1 1/2 O.D.: 1 7/8	
TYPE OF RISER PIPE	PVC
TYPE OF BACKFILL AROUND RISER PIPE	bentonite
DEPTH TOP OF SEAL (Ft.)	5
TYPE OF SEAL	bentonite
DEPTH BOTTOM OF SEAL (Ft.)	27
DEPTH TOP OF PERVIOUS SECTION (Ft.)	29
DIAMETER OF BOREHOLE (In.)	3.7
TYPE OF PERVIOUS SECTION	PVC
TYPE OF OPENINGS	slotted 0.010
PERVIOUS SECTION (In.) I.D.: 1 1/2 O.D.: 1 7/8	
TYPE OF FILTER PACK AROUND PERVIOUS SECTION	#0 Sand
DEPTH BOTTOM OF PERVIOUS SECTION (Ft.)	39
DEPTH BOTTOM OF FILTER PACK (Ft.)	40

GENERAL NOTE:

1. Entry of 0.00 for Ground Elevation, Elev. Top of Riser Pipe & Elev. Top of Protective Casing Indicates that Surveyed Ground Elevation Not Available.

BEDROCK MONITORING WELL CONSTRUCTION LOG — TETRA TECH NUS, INC. — TtNUS form 0060

PROJECT NAME: Supplemental RI
PROJECT LOCATION: NAVSTA Newport
CLIENT: Navy
CONTRACTOR: CDS — DRILLER: T Martinelli
LOGGED BY: ADC/RC — DATE: 7/13/10 7/20/10
CHECKED BY: D Sieken — DATE: 10/19/10

PROJECT NO: 112G02124
WELL NO: MW-117B-D1
BORING NO: 117B-D1
BORING LOCATION: N: 165170.12 E: 381262.83
PAGE: 1 OF 1

ELEVATION TOP OF PROTECTIVE CASING: 46.53
ELEVATION TOP OF RISER PIPE: 46.29
GROUND ELEVATION: 44.7
DEPTH TO BEDROCK (Ft.): 8
DEPTH TO BOTTOM OF CASING (Ft.): 10
END OF BORING @ 30 Ft.

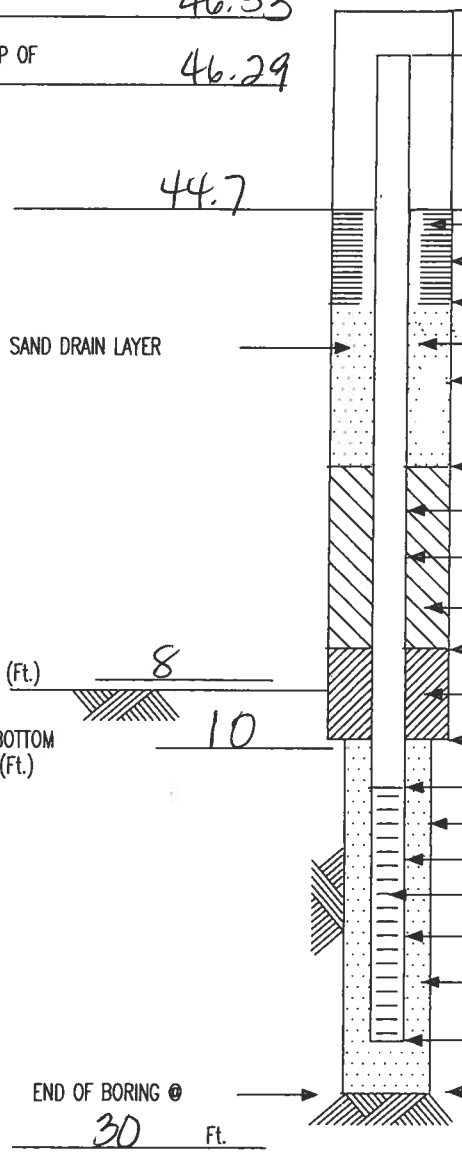

LENGTH OF PROTECTIVE CASING ABOVE GROUND SURFACE (Ft.)	1.83
LENGTH OF RISER PIPE ABOVE GROUND SURFACE (Ft.)	1.59
TYPE OF SURFACE SEAL	cement
DIA. SURFACE SEAL BGS (In.)	24 x 24
DEPTH TO BOTTOM OF SURFACE SEAL (Ft.)	1/2
I.D. OF PROTECTIVE CASING (In.)	4
TYPE OF CASING	Steel
DEPTH BOTTOM OF DRAIN LAYER (Ft.)	5
RISER PIPE (In.) I.D.: 1 1/2 O.D.:	1 7/8
TYPE OF RISER PIPE	PVC
TYPE OF BACKFILL AROUND RISER PIPE	#0 Sand
DEPTH TOP OF SEAL (Ft.)	5
TYPE OF SEAL	bentonite
DEPTH BOTTOM OF SEAL (Ft.)	17
DEPTH TOP OF PERVIOUS SECTION (Ft.)	19
DIAMETER OF BOREHOLE (In.)	4
TYPE OF PERVIOUS SECTION	PVC
TYPE OF OPENINGS	slotted 0.010
PERVIOUS SECTION (In.) I.D.: 1 1/2 O.D.:	1 7/8
TYPE OF FILTER PACK AROUND PERVIOUS SECTION	#0 Sand
DEPTH BOTTOM OF PERVIOUS SECTION (Ft.)	29
DEPTH BOTTOM OF FILTER PACK (Ft.)	30

GENERAL NOTE:

1. Entry of 0.00 for Ground Elevation, Elev. Top of Riser Pipe & Elev. Top of Protective Cosing Indicates that Surveyed Ground Elevation Not Available.

WELL NO.: MW-117B

Tetra Tech NUS, Inc.

BEDROCK
MONITORING WELL SHEET
OPEN HOLE WELL

PROJECT NUSC Disposal Area	LOCATION North Meadow	DRILLER Geosearch
PROJECT NO. 112G00933	BORING B117B	DRILLING METHOD HSA/HQ Wireline/Hammer Air
DATE BEGUN 03/31/08	DATE COMPLETED 04/04/08	
FIELD GEOLOGIST M. Alroy		DEVELOPMENT METHOD Whale
GROUND ELEVATION 45.0	DATUM NGVD	

ACAD:FORM_MWOHW.dwg 07/20/99 INL

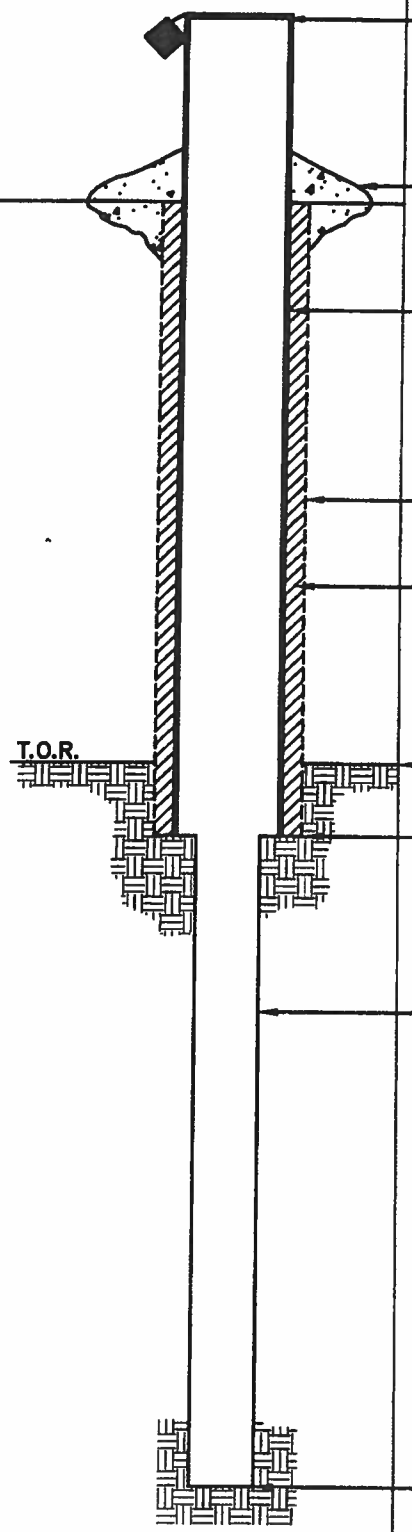

ELEVATION/HEIGHT OF TOP OF SURFACE CASING: 47.00' / 2.00'

Modified 7/15/10 - see next pg.

TYPE OF SURFACE SEAL: Concrete

I.D. OF CASING: 4"

TYPE OF CASING: Steel

TEMP./PERM.: Permanant

DIAMETER OF HOLE: 7.25"

TYPE OF CASING SEAL: Bentonite

DEPTH TO TOP OF ROCK: 1.35'

DEPTH TO BOTTOM CASING: 10'

DIAMETER OF HOLE IN BEDROCK: 3.7"

DESCRIBE IF CORE/REAMED WITH BIT: N/A

DESCRIBE JOINTS IN BEDROCK AND DEPTH: N/A

ELEVATION/DEPTH OF HOLE: 5' / 40'

BEDROCK MONITORING WELL CONSTRUCTION LOG — TETRA TECH NUS, INC. — TtNUS form 0060

PROJECT NAME: Supplemental RI
PROJECT LOCATION: NAVSTA Newport
CLIENT: Navy
CONTRACTOR: CDS — DRILLER: T Martinelli
LOGGED BY: RC — DATE: 7/15/10
CHECKED BY: D Seiken — DATE: 10/19/10

PROJECT NO: 112G02124
WELL NO: MW-117B-D2
BORING NO: 117B
BORING LOCATION: N: 165176.29 E: 381265.52
PAGE: 1 OF 1

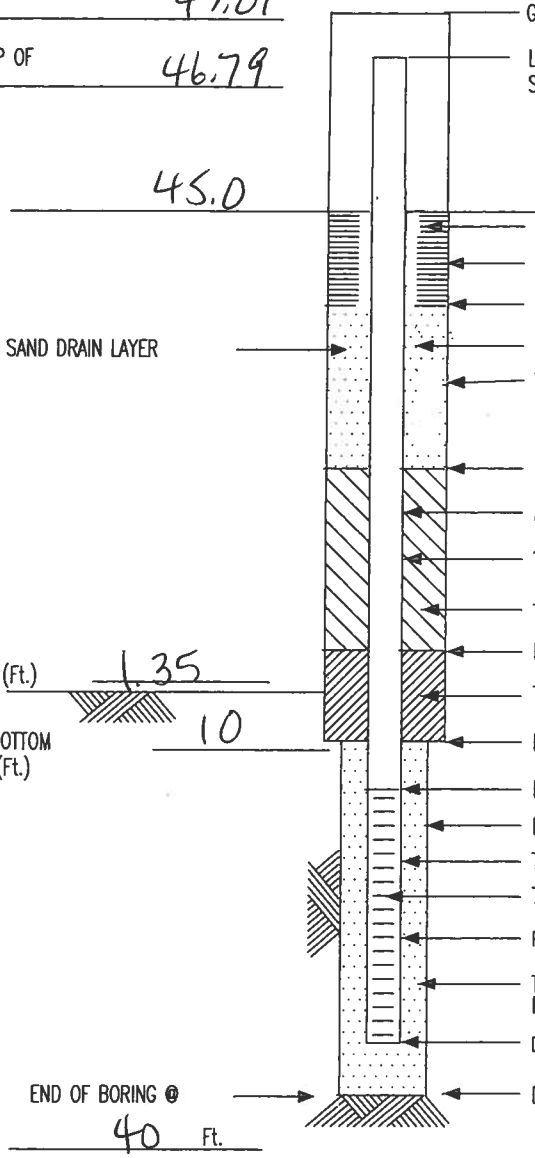

ELEVATION TOP OF PROTECTIVE CASING	47.01
ELEVATION TOP OF RISER PIPE	46.79
GROUND ELEVATION	45.0
LENGTH OF PROTECTIVE CASING ABOVE GROUND SURFACE (Ft.)	2.01
LENGTH OF RISER PIPE ABOVE GROUND SURFACE (Ft.)	1.79
TYPE OF SURFACE SEAL	cement
DIA. SURFACE SEAL BGS (In.)	24 x 24
DEPTH TO BOTTOM OF SURFACE SEAL (Ft.)	1/2
I.D. OF PROTECTIVE CASING (In.)	4
TYPE OF CASING	Steel
DEPTH BOTTOM OF DRAIN LAYER (Ft.)	5
RISER PIPE (In.) I.D.: 1 1/2 O.D.: 1 7/8	
TYPE OF RISER PIPE	PVC
TYPE OF BACKFILL AROUND RISER PIPE	#0 Sand
DEPTH TOP OF SEAL (Ft.)	5
TYPE OF SEAL	bentonite
DEPTH BOTTOM OF SEAL (Ft.)	27
DEPTH TOP OF PERVIOUS SECTION (Ft.)	29
DIAMETER OF BOREHOLE (In.)	3.7
TYPE OF PERVIOUS SECTION	PVC
TYPE OF OPENINGS	slotted 0.010
PERVIOUS SECTION (In.) I.D.: 1 1/2 O.D.: 1 7/8	
TYPE OF FILTER PACK AROUND PERVIOUS SECTION	#0 Sand
DEPTH BOTTOM OF PERVIOUS SECTION (Ft.)	39
DEPTH BOTTOM OF FILTER PACK (Ft.)	40

GENERAL NOTE:

1. Entry of 0.00 for Ground Elevation, Elev. Top of Riser Pipe & Elev. Top of Protective Casing Indicates that Surveyed Ground Elevation Not Available.

BEDROCK MONITORING WELL CONSTRUCTION LOG — TETRA TECH NUS, INC. — TtNUS form 0060

PROJECT NAME: Supplemental RI
PROJECT LOCATION: NAVSTA Newport
CLIENT: Navy
CONTRACTOR: CDS
LOGGED BY: ADC/RC
CHECKED BY: D Seiken
DRILLER: T Martinelli
DATE: 7/13/10 7/20/10
DATE: 10/19/10

PROJECT NO: 112G02124
WELL NO: MW-118B-D1
BORING NO: 118B-D1
BORING LOCATION: N 165382.19 E: 381197.11

PAGE: 1 OF 1

ELEVATION TOP OF PROTECTIVE CASING: 50.07
ELEVATION TOP OF RISER PIPE: 49.81
GROUND ELEVATION: 47.8
DEPTH TO BEDROCK (Ft.): 16
DEPTH TO BOTTOM OF CASING (Ft.): 18
END OF BORING @ 38 Ft.

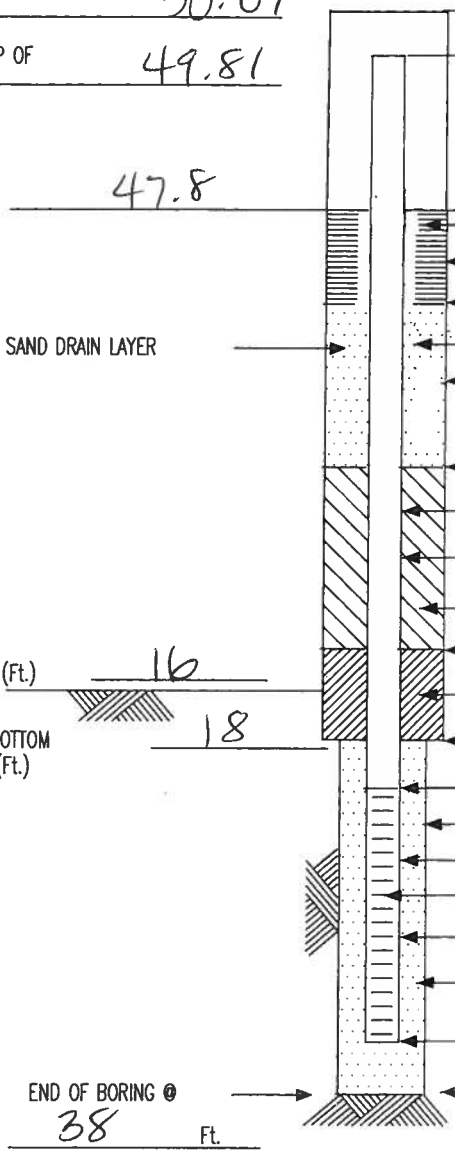

LENGTH OF PROTECTIVE CASING ABOVE GROUND SURFACE (Ft.)	2.27
LENGTH OF RISER PIPE ABOVE GROUND SURFACE (Ft.)	2.01
TYPE OF SURFACE SEAL	cement
DIA. SURFACE SEAL BGS (In.)	24 x 24
DEPTH TO BOTTOM OF SURFACE SEAL (Ft.)	1/2
I.D. OF PROTECTIVE CASING (In.)	4
TYPE OF CASING	Steel
DEPTH BOTTOM OF DRAIN LAYER (Ft.)	5
RISER PIPE (In.) I.D.: 1 1/2 O.D.:	1 7/8
TYPE OF RISER PIPE	PVC
TYPE OF BACKFILL AROUND RISER PIPE	bentonite
DEPTH TOP OF SEAL (Ft.)	5
TYPE OF SEAL	bentonite
DEPTH BOTTOM OF SEAL (Ft.)	25
DEPTH TOP OF PERVIOUS SECTION (Ft.)	27
DIAMETER OF BOREHOLE (In.)	4
TYPE OF PERVIOUS SECTION	PVC
TYPE OF OPENINGS	slotted 0.010
PERVIOUS SECTION (In.) I.D.: 1 1/2 O.D.:	1 7/8
TYPE OF FILTER PACK AROUND PERVIOUS SECTION	#0 Sand
DEPTH BOTTOM OF PERVIOUS SECTION (Ft.)	37
DEPTH BOTTOM OF FILTER PACK (Ft.)	38

GENERAL NOTE:

1. Entry of 0.00 for Ground Elevation, Elev. Top of Riser Pipe & Elev. Top of Protective Casing Indicates that Surveyed Ground Elevation Not Available.

WELL NO.: MW-118B

Tetra Tech NUS, Inc.

BEDROCK
MONITORING WELL SHEET
OPEN HOLE WELL

PROJECT NUSC Disposal Area	LOCATION North Meadow	DRILLER Geosearch
PROJECT NO. 112G00933	BORING B118B	DRILLING METHOD HSA/Air Hammer
DATE BEGUN 03/18/08	DATE COMPLETED 03/27/08	
FIELD GEOLOGIST M. Alroy		DEVELOPMENT METHOD Grundfos
GROUND ELEVATION 47.7	DATUM NGVD	

ACAD:FORM_MWOHW.dwg 07/28/99 INL

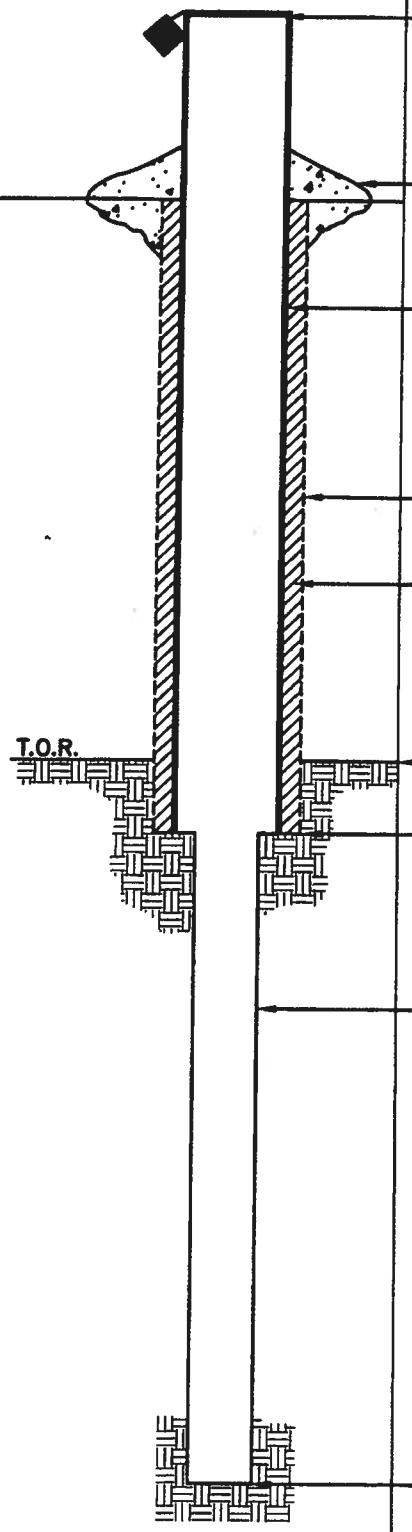

ELEVATION/HEIGHT OF TOP OF SURFACE CASING: 50.11' / 2.41'

Modified 7/20/10 see next pg.

TYPE OF SURFACE SEAL: Concrete

I.D. OF CASING: 4"

TYPE OF CASING: Steel

TEMP./PERM.: Permanant

DIAMETER OF HOLE: 7.25"

TYPE OF CASING SEAL: Bentonite

DEPTH TO TOP OF ROCK: 8.5'

DEPTH TO BOTTOM CASING: 18'

DIAMETER OF HOLE IN BEDROCK: 3.7"

DESCRIBE IF CORE/REAMED WITH BIT: N/A

DESCRIBE JOINTS IN BEDROCK AND DEPTH: N/A

ELEVATION/DEPTH OF HOLE: -1.3' / 49'

BEDROCK MONITORING WELL CONSTRUCTION LOG — TETRA TECH NUS, INC. — TtNUS form 0060

PROJECT NAME: Supplemental RI
PROJECT LOCATION: NAVSTA Newport
CLIENT: Navy
CONTRACTOR: CDS — DRILLER:
LOGGED BY: — DATE:
CHECKED BY: D Seiken — DATE:

PROJECT NO: 112G02124
WELL NO: MW-118B-D2
BORING NO: 118B
BORING LOCATION: N: 165385.50 E: 381194.98
PAGE: 1 OF 1

ELEVATION TOP OF PROTECTIVE CASING: 50.13
ELEVATION TOP OF RISER PIPE: 49.91
GROUND ELEVATION: 47.8

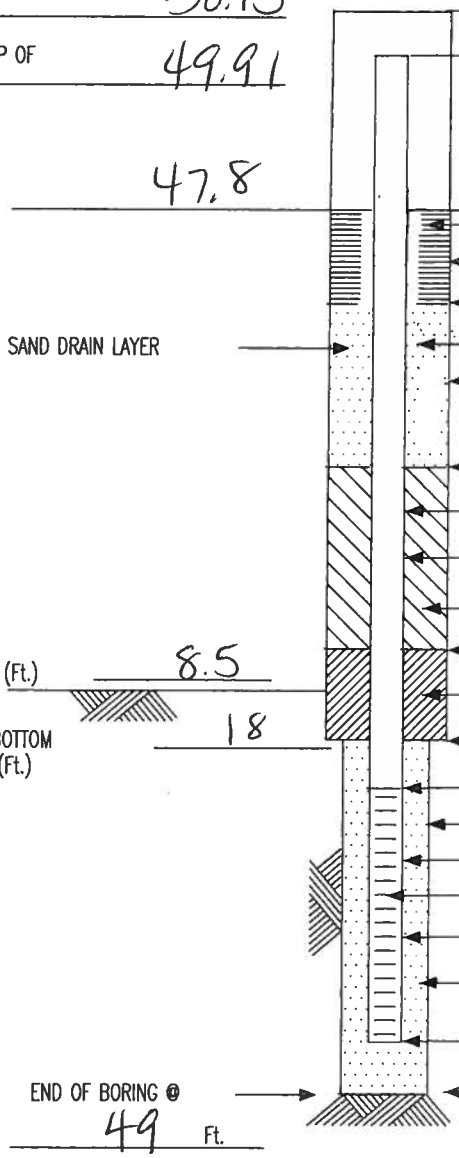

LENGTH OF PROTECTIVE CASING ABOVE GROUND SURFACE (Ft.)	2.33
LENGTH OF RISER PIPE ABOVE GROUND SURFACE (Ft.)	2.11
TYPE OF SURFACE SEAL	cement
DIA. SURFACE SEAL BGS (In.)	24 x 24
DEPTH TO BOTTOM OF SURFACE SEAL (Ft.)	1/2
I.D. OF PROTECTIVE CASING (In.)	4
TYPE OF CASING	Steel
DEPTH BOTTOM OF DRAIN LAYER (Ft.)	5
RISER PIPE (In.) I.D.: 1 1/2 O.D.:	1 7/8
TYPE OF RISER PIPE	PVC
TYPE OF BACKFILL AROUND RISER PIPE	bentonite
DEPTH TOP OF SEAL (Ft.)	5
TYPE OF SEAL	bentonite
DEPTH BOTTOM OF SEAL (Ft.)	35
DEPTH TOP OF PERVIOUS SECTION (Ft.)	37
DIAMETER OF BOREHOLE (In.)	4
TYPE OF PERVIOUS SECTION	PVC
TYPE OF OPENINGS	slotted 0.010
PERVIOUS SECTION (In.) I.D.: 1 1/2 O.D.:	1 7/8
TYPE OF FILTER PACK AROUND PERVIOUS SECTION	#0 Sand
DEPTH BOTTOM OF PERVIOUS SECTION (Ft.)	47
DEPTH BOTTOM OF FILTER PACK (Ft.)	49

GENERAL NOTE:

1. Entry of 0.00 for Ground Elevation, Elev. Top of Riser Pipe & Elev. Top of Protective Casing Indicates that Surveyed Ground Elevation Not Available.

BEDROCK MONITORING WELL CONSTRUCTION LOG — TETRA TECH NUS, INC. — TtNUS form 0060

PROJECT NAME: Supplemental RI
PROJECT LOCATION: NAVSTA Newport
CLIENT: Navy
CONTRACTOR: CDS — DRILLER: T Martinelli
LOGGED BY: RC — DATE: 7/21/10
CHECKED BY: D Seiken — DATE: 10/19/10

PROJECT NO: 112602124
WELL NO: MW-127B
BORING NO: 127B
BORING LOCATION: N: 165533.56, E: 381004.60
PAGE: 1 OF 1

ELEVATION TOP OF PROTECTIVE CASING: 45.37
ELEVATION TOP OF RISER PIPE: 45.16
GROUND ELEVATION: 43.2
DEPTH TO BEDROCK (Ft.): 12
DEPTH TO BOTTOM OF CASING (Ft.): 18
END OF BORING @ 46 Ft.

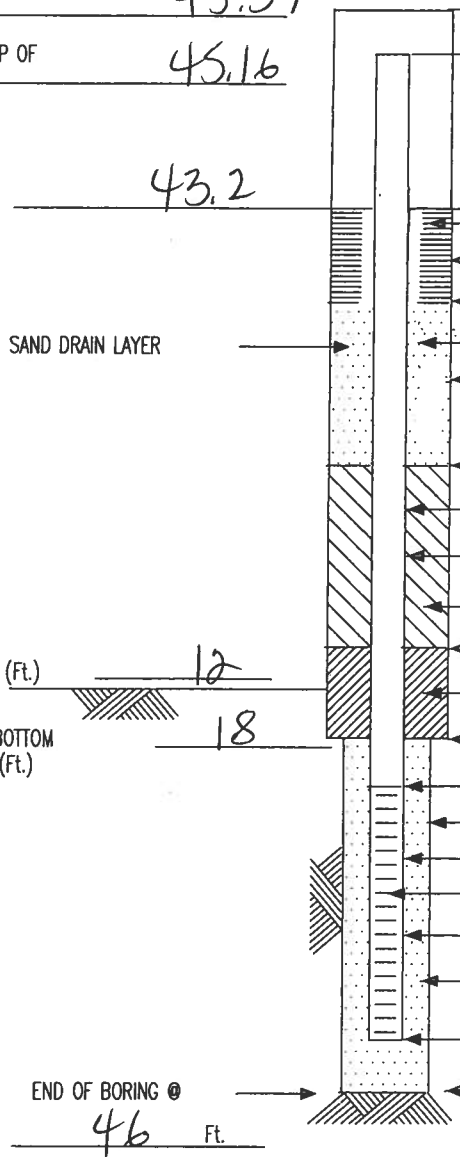

LENGTH OF PROTECTIVE CASING ABOVE GROUND SURFACE (Ft.)	2.17
LENGTH OF RISER PIPE ABOVE GROUND SURFACE (Ft.)	1.96
TYPE OF SURFACE SEAL	cement
DIA. SURFACE SEAL BGS (In.)	24 x 24
DEPTH TO BOTTOM OF SURFACE SEAL (Ft.)	1/2
I.D. OF PROTECTIVE CASING (In.)	6
TYPE OF CASING	Steel
DEPTH BOTTOM OF DRAIN LAYER (Ft.)	5
RISER PIPE (In.) I.D.: 2 O.D.:	2 1/4
TYPE OF RISER PIPE	PVC
TYPE OF BACKFILL AROUND RISER PIPE	bentonite
DEPTH TOP OF SEAL (Ft.)	5
TYPE OF SEAL	bentonite
DEPTH BOTTOM OF SEAL (Ft.)	34
DEPTH TOP OF PERVIOUS SECTION (Ft.)	36
DIAMETER OF BOREHOLE (In.)	6
TYPE OF PERVIOUS SECTION	PVC
TYPE OF OPENINGS	slotted 0.010
PERVIOUS SECTION (In.) I.D.: 2 O.D.:	2 1/4
TYPE OF FILTER PACK AROUND PERVIOUS SECTION	#0 Sand
DEPTH BOTTOM OF PERVIOUS SECTION (Ft.)	46
DEPTH BOTTOM OF FILTER PACK (Ft.)	46

GENERAL NOTE:

1. Entry of 0.00 for Ground Elevation, Elev. Top of Riser Pipe & Elev. Top of Protective Casing Indicates that Surveyed Ground Elevation Not Available.

BEDROCK MONITORING WELL CONSTRUCTION LOG — TETRA TECH NUS, INC. — TtNUS form 0060

PROJECT NAME: Supplemental RI
PROJECT LOCATION: NAVSTA Newport
CLIENT: Navy
CONTRACTOR: CDS
DRILLER: T Martinelli
LOGGED BY: RC
DATE: 7/21/10
CHECKED BY: D Seiken
DATE: 10/19/10

PROJECT NO: 112G02124
WELL NO: MW-128B
BORING NO: 128B
BORING LOCATION:
N: 165265.79
E: 381215.83

PAGE: 1 OF 1

ELEVATION TOP OF PROTECTIVE CASING: 48.43
ELEVATION TOP OF RISER PIPE: 48.29
GROUND ELEVATION: 45.9
DEPTH TO BEDROCK (Ft.): 10
DEPTH TO BOTTOM OF CASING (Ft.): 18
END OF BORING @ 51 Ft.

LENGTH OF PROTECTIVE CASING ABOVE GROUND SURFACE (Ft.)	2.53
LENGTH OF RISER PIPE ABOVE GROUND SURFACE (Ft.)	2.39
TYPE OF SURFACE SEAL	cement
DIA. SURFACE SEAL BGS (In.)	24 x 24
DEPTH TO BOTTOM OF SURFACE SEAL (Ft.)	1/2
I.D. OF PROTECTIVE CASING (In.)	6
TYPE OF CASING	Steel
DEPTH BOTTOM OF DRAIN LAYER (Ft.)	5
RISER PIPE (In.) I.D.: 2 O.D.: 2 1/4	
TYPE OF RISER PIPE	PVC
TYPE OF BACKFILL AROUND RISER PIPE	bentonite
DEPTH TOP OF SEAL (Ft.)	5
TYPE OF SEAL	bentonite
DEPTH BOTTOM OF SEAL (Ft.)	33
DEPTH TOP OF PERVIOUS SECTION (Ft.)	35
DIAMETER OF BOREHOLE (In.)	6
TYPE OF PERVIOUS SECTION	PVC
TYPE OF OPENINGS	slotted 0.010
PERVIOUS SECTION (In.) I.D.: 2 O.D.: 2 1/4	
TYPE OF FILTER PACK AROUND PERVIOUS SECTION	#0 Sand
DEPTH BOTTOM OF PERVIOUS SECTION (Ft.)	45
DEPTH BOTTOM OF FILTER PACK (Ft.)	51

SAND DRAIN LAYER

GENERAL NOTE:

1. Entry of 0.00 for Ground Elevation, Elev. Top of Riser Pipe & Elev. Top of Protective Casing Indicates that Surveyed Ground Elevation Not Available.

OPEN HOLE WELL CONSTRUCTION LOG

TETRA TECH NUS, INC.

PROJECT NAME: Supplemental RI
PROJECT NO: 112G02124
PROJECT LOCATION: Site 08 NUSC NAVSTA Newport
WELL NO: MW-129B
CLIENT: Navy
BORING NO: 129B
CONTRACTOR: CDS
DRILLER: T Martinelli
BORING LOCATION:
LOGGED BY: R Clark
DATE: 7/19/10
N: 163345.31
CHECKED BY: D Sliker
DATE: 10/19/10
E: 381556.95
PAGE: 1 OF 1

ELEVATION TOP OF PROTECTIVE CASING 53.27

ELEVATION TOP OF RISER PIPE 53.03

FLUSH MOUNT PROTECTIVE CASING GROUND SURFACE (Ft.)

LENGTH OF RISER PIPE BELOW GROUND SURFACE (Ft.) 0.03

GROUND ELEVATION 53.0

I.D. OF CASING (In.) 8

TYPE OF CASING Steel

DIAMETER OF HOLE (in.) 12 + 4

RISER PIPE (In.) I.D.: 4 O.D.: 4 1/2

TYPE OF CASING SEAL

DEPTH TO BEDROCK (Ft.) 6

TYPE OF SEAL Bentonite

DEPTH BOTTOM OF CASING (Ft.) 8

DIAMETER OF HOLE IN BEDROCK (In.) 4

END OF BORING @ 58 Ft.

DESCRIBE IF CORE/REAMED WITH BIT:

DESCRIBE JOINTS IN BEDROCK AND DEPTH:

GENERAL NOTE:

1. Entry of 0.00 for Ground Elevation, Elev. Top of Riser Pipe & Elev. Top of Protective Casing Indicates that Surveyed Ground Elevation Not Available.

OPEN HOLE WELL CONSTRUCTION LOG

TETRA TECH NUS, INC.

PROJECT NAME: Supplemental RI
PROJECT NO: 117G02124
PROJECT LOCATION: Std. 08 NUSC NAVSTA Newport
WELL NO: MW-130B
CLIENT: Navy
BORING NO: 130B
CONTRACTOR: CDS
DRILLER: T Mastinelli
BORING LOCATION:
LOGGED BY: R Clark
DATE: 7/19/10
N: 164557.55
CHECKED BY: D Seiker
DATE: 10/19/10
E: 381427.55
PAGE: 1 OF 1

ELEVATION TOP OF PROTECTIVE CASING 45.20

ELEVATION TOP OF RISER PIPE 44.75

FLUSH MOUNT PROTECTIVE CASING GROUND SURFACE (Ft.)

LENGTH OF RISER PIPE BELOW GROUND SURFACE (Ft.) 0.05

GROUND ELEVATION 44.8

I.D. OF CASING (In.) 8

TYPE OF CASING Steel

DIAMETER OF HOLE (in.) 6

RISER PIPE (In.) I.D.: 4 O.D.: 4 1/2

TYPE OF CASING SEAL

DEPTH TO BEDROCK (Ft.) 8 1/2

TYPE OF SEAL Bentonite

DEPTH BOTTOM OF CASING (Ft.) 10 1/2

DIAMETER OF HOLE IN BEDROCK (In.) 4

END OF BORING @ 60 1/2 Ft.

DESCRIBE IF CORE/REAMED WITH BIT:

DESCRIBE JOINTS IN BEDROCK AND DEPTH:

GENERAL NOTE:

1. Entry of 0.00 for Ground Elevation, Elev. Top of Riser Pipe & Elev. Top of Protective Casing Indicates that Surveyed Ground Elevation Not Available.

ATTACHMENT B

BOREHOLE GEOPHYSICAL SURVEY REPORT

BOREHOLE GEOPHYSICAL SERVICES
SITE 08, NUSC DISPOSAL AREA
NAVSTA NEWPORT
MIDDLETOWN, RI
TTNUS SUBCONTRACT 1061823

Prepared for:

Tetra Tech NUS, Inc.
55 Jonspin Road
Wilmington, Massachusetts 01887

Prepared by:

Hager GeoScience, Inc.
596 Main Street
Woburn, Massachusetts 01801

File 2010041
September 2010

1.0 INTRODUCTION

In June of 2010, Hager GeoScience, Inc. (HGI) was contracted by Tetra Tech NUS, Inc. (TtNUS) to perform geophysical borehole logging of 7 open-hole bedrock borings at Site 08 of the NUSC disposal area, NAVSTA Newport, in Middletown, Rhode Island.

The borehole logging is part of an ongoing bedrock evaluation study. The objective of the logging was to characterize bedrock and flow by collecting the following borehole data: fluid temperature and resistivity, caliper, gamma, acoustic televiewer, and both ambient and stressed heat pulse flow meter. The work was performed for the Navy under the direction of TtNUS.

The work was performed in two phases, with the first phase completed on July 6th and the second on July 28th, 2010. Existing boreholes MW-116B, MW-117B, and MW-118B were logged in the first phase and new bedrock borings MW-129B and MW-130B in the second. The scheduled logging of two additional wells originally part of the program (new bedrock borings MW-127B and MW-128B) was not performed.

2.0 DATA ACQUISITION

The borehole data were acquired using HGI's logging system consisting of a Mount Sopris Instruments 5MXA-1000 Matrix logger and MSI 4WNA-1000 winch; MSI 2CAA-1000 three-arm caliper probe; Advanced Logic Technologies FAC40 Acoustic Televiewer (ATV); MSI 2PEA-1000 polyelectric with MSI 2SFA-1000 fluid temperature and resistivity; MSI 2PGA gamma; and MSI- HFP-2293 Heat Pulse Flow Meter (HPFM). A borehole camera log was also run using an Aries Industries WC1750 dual view inspection camera.

The logging winch, controller, generator, and computer were housed in HGI's logging truck. An HGI geologist monitored the logs in real time during data acquisition and recorded hardware and software settings as well as data anomalies in a logbook and on forms developed for the project. Raw data from the logging runs were stored digitally on the computer for onsite and later processing, analysis, and plotting.

The log suite included the following logs (run in the order listed):

1. Poly-Electric including Fluid Temperature and Fluid Resistivity
2. Natural Gamma
3. Caliper
4. Acoustic Televiewer (ATV)
5. Heat-Pulse Flow Meter (HPFM) – Ambient Well Condition
6. Heat-Pulse Flow Meter (HPFM) – Stressed Well Condition
7. Dual View Borehole Camera

3.0 LOG DESCRIPTIONS

The log suite used on this project is summarized below.

Poly-Electric Probe

The poly-electric probe is a combination tool that measures various electrical properties, temperature, and natural gamma content of the bedrock and borehole fluid.

Fluid Temperature/Resistivity Probe

Fluid temperature logs record water temperature with depth in the borehole. These logs are useful for delineating water-bearing zones and identifying vertical flow in the borehole between zones of differing hydraulic head penetrated by wells. Borehole flow between zones is indicated by temperature gradients that are less than the regional geothermal gradient, which is about 1 degree Fahrenheit per 100 feet of depth.

Fluid resistivity logs measure the electric resistivity of water in the borehole. Changes in fluid resistivity reflect differences in the concentration of dissolved solids in water. Fluid resistivity logs are useful for delineating water-bearing zones and, possibly, contaminants in the borehole.

The sample interval for the poly-electric logging was 0.25 feet at a logging rate of 7 to 8 feet per minute. The natural gamma probe was run separately.

Gamma Probe

Natural gamma is useful to determine the presence and location of clay-filled fractures. These logs record the amount of natural gamma radiation emitted by the rocks surrounding the borehole. The most significant naturally occurring sources of gamma radiation are potassium-40 and daughter products of the uranium- and thorium-decay series. Shale and clay-filled fractures commonly emit relatively high gamma radiation because they include weathering products of potassium feldspar and mica and tend to concentrate uranium and thorium by ion absorption and exchange. The natural gamma probe can be run independently or in combination as a poly-electric probe.

The natural gamma logging sample interval was approximately 0.1 foot at a logging rate of 10 to 12 feet per minute.

Caliper Probe

Caliper logs record borehole diameter using a simple three-arm measuring system. Changes in borehole diameter are related to well construction, such as casing or drill-bit size, and to fracturing or breakout along the borehole wall. Because borehole diameter commonly affects log response, the caliper log is useful in the analysis of other geophysical logs. Caliper data are also combined with ATV data to produce 3-D “virtual cores.” The hearty caliper tool is usually run first in order to probe and assess the suitability of the borehole for running more sensitive and

expensive tools.

The sampling interval was 0.04 foot at a logging rate of approximately 10 feet per minute. The caliper probe calibration was checked on-site before each run and re-calibration was performed as necessary.

Acoustic Televiewer (ATV) Probe

Using high frequency acoustic energy, the acoustic televiewer measures the acoustic impedance of the borehole wall and the two-way travel time of the transmitted signals. Major differences in travel time and reflection amplitudes from background values are seen as anomalous features. Borehole deviation data, recorded from a three-component magnetometer and two accelerometers, are used to provide the corrected orientation and shape of the imaged features. As a result, it is possible to calculate the dip direction and dip angle of imaged planar features. Discontinuities imaged with the ATV include open or filled fractures, foliation, mineralization, weathered zones, and other rock fabric.

The sample interval used for ATV logging was 0.01 foot. A scan time of 1250 µsec was used with a sample rate of 288 measurements per revolution. The logging rate was 2 to 5 feet per minute. The ATV log also provides 3D caliper/borehole geometry via the 2-way travel time data and is immune to turbidity and other borehole fluid characteristics.

Heat Pulse Flow Meter Probe

The heat-pulse flow meter (HPFM) log is usually run under ambient and stressed conditions at predetermined depth intervals or at intervals selected on-site after a preliminary review of the previous log data.

The tool contains a thermistor, for generating a pulse of heat into the water, and two temperature sensors for measuring the direction and magnitude of the pulse of heated water in the borehole. Diverters are used to channel the heated water flow past the sensors for measurement.

The HPFM measures the direction and rate of induced low vertical flow in the borehole. The HPFM probe is calibrated to resolve flow rates from approximately 0.01 to 1.0 gpm. Accurate measurements require sufficient time between readings for the area around the tool to stabilize. At least three readings, each lasting up to 25 seconds, are recorded per interval to obtain a reasonable average measurement. The HPFM log is run under ambient and stressed well conditions to provide data for quantitative flow analyses. In certain circumstances, such as with very small open-hole intervals and wells with very low or very high well recharge rates, reasonable pump rates cannot be maintained for measuring flow under stressed-well conditions. In such cases, testing can be performed to obtain the relative productivity of the exposed fractures.

Both ambient and stressed HPFM measurements were made in the five wells. As specified in the Technical Requirements for the project, the HPFM measurements for both ambient and stressed

were made at five-foot intervals. A pumping rate of approximately 0.8 to 1 gpm was used for the stressed well HPFM measurements.

Dual View Borehole Camera (Additional Optional Run)

The Aries WC1750 slim-line dual view water-well color inspection camera has a maximum outside diameter of only 1.750 inches. Its small design permits the inspection of small boreholes, monitoring wells, and in some cases, getting between the casing and pump. The camera included the following operator-controlled features: adjustable focus, electronic shutter (iris), low/med/high lighting controls, slow/med/fast rotation, rotation direction (clockwise/counterclockwise), front view and side view selection. It can withstand a depth of 5,000 feet. The ring light allows for unobstructed viewing in tight spaces. The camera uses LED lighting technology, and its housing is pressurized with dry nitrogen gas to help displace moisture and minimize corrosion.

The borehole wall was scanned in reconnaissance mode using the down-hole and side camera views. Specific features on the borehole wall were recorded using the rotating side camera. The water clarity in the wells was variable, ranging from very low to relatively clear. Low visibility prohibited the full down-hole view. Consequently, most of the borehole with low visibility was viewed using the side view camera. Considerable algae and colloidal particles were observed in most of the wells, so the borehole camera provided only limited additional information.

4.0 DATA REDUCTION

Borehole logging data were processed as graphical logs using WellCAD for Windows© software system, Matrix Heat program, Excel spreadsheets, and Rockworks. Logs were compiled onto a one-sheet composite format to allow for more efficient graphical log analysis. Log scales were set to optimize the detection of readings that depart from baseline and background values and can be adjusted using the WellCAD reader. ***Log depths are referenced to ground surface***.

The surveyed wells are not deep enough (below casing) to provide optimum measurements of electrical properties of the bedrock. However, since the electric log data are part of the poly-electric survey, they are included as supplemental data for characterizing the lithology.

Heat-pulse flow meter data was collected and formatted into an ASCII data file using Matrix Heat. The ASCII file was used to create WellCAD mud logs that are included in the composite logs. In addition to the detection limits of the HPFM, another limitation that should be considered when reviewing the data is the possible poor seating of the diverter along irregular borehole walls. This will result in readings lower than those defining the surrounding trend.

Video logs were recorded directly to DVDs and were not processed. The video quality is directly related to the borehole water quality.

Acoustic televiewer deviation data are affected by metal casing. The probe's magnetometers are progressively affected starting from approximately 7 feet below the casing. Consequently,

measurements of borehole structures made within this interval using uncorrected orientation data will be incorrect. HGI uses a procedure to correct the affected data to a value representing a good approximation of the true values of measured structures. This correction was made in all wells within intervals near the bottom of the casing.

Structure logs identifying discontinuities from ATV data were constructed using WellCAD. The orientation of rock structures were measured and stored as structure logs. The structure data were converted from apparent to true dip and rotated from magnetic north reference markers to true north using a site-specific 14.75-degree west magnetic declination. Therefore, all ***structural data are relative to true north***. The structure features (discontinuities) are presented as strike and dip direction and dip angle. Structure data for discontinuities interpreted from the ATV logs were compiled for each well as Excel data tables.

The stereonets shown at mid-depth on the composite logs and as separate figures were constructed using a ***southern hemisphere*** equal-area Schmidt polar projection showing dip direction and dip angle. The structural data set has been color-coded to reflect the apparent aperture of the imaged discontinuities and to discriminate between non-fracture and fracture features. The classification system is intended as a guide for data review. Therefore, some tight fractures may also appear as foliation (or vice versa) in the stereonets.

The ranking system is based on caliper, acoustic amplitude, and acoustic travel time logs. The ranking index is subjective and attempts to qualitatively identify the potential weakness of the individual discontinuities. Red (code 105), green (code 106), blue (code 107), and magenta (code 110) colors represent wide-, moderate-, small-, and tight-fracture aperture, respectively. Code 108 is used to represent general rock fabric that could include foliation, cleavage, or other lineations. Unless otherwise noted with an open aperture code, the rock fabric features (108) are generally tight. As imperfections in the rock, it is common for rock fabrics to appear in acoustic images and remain invisible to the naked eye during core evaluations. Codes 109 and 111 are reserved for bedding and vein-type features, respectively. Large formal rose and stereonet diagrams for each of the five wells are included.

The ATV logs are presented as 2-D images of the borehole wall and 3-D virtual core and borehole images. 2-D logs show the two-way travel time and reflection amplitude of transmitted signals. The 3-D virtual core logs were constructed using the centralized travel-time log data to define the core shape or diameter. The 3-D virtual core log using travel times is a physical representation of the borehole geometry. It can be rotated using the WellCAD reader and is useful for analyzing the physical characteristics of the structures/discontinuities shown as amplitude variations on the 2-D ATV log format.

Digital WellCAD log files, uploaded to the project ftp site, can be viewed and analyzed using the WellCAD Reader. The Reader functions in a Windows operating environment and is designed to facilitate log analysis performed by the reviewer. The WellCAD reader can be used to scroll logs, view and rotate 3-D logs, change log scales, review numerical log data, and print logs.

5.0 DATA ANALYSIS

The borehole geophysical log format is intended to provide the data necessary for the user to perform his/her own detailed log analysis. The following discussion is a borehole summary based on the detailed log data in the Appendices.

MW-116B
The rock type is predominantly siltstone/sandstone from approximately 32 to 20 feet. The remaining borehole rock consists of shale, with intervals of graphitic shale and quartz breccia. The shale bedding dips westerly and southeasterly at low angles. The predominant fracture set dips to the northwest at moderate to high angles. Other fracture sets are near vertical or have high-angle northeast and southeast dips.

Under ambient conditions, HPFM measurements show little or no flow. Marginal inflow could be interpreted from the measurement at 32 feet. Under stressed conditions, no flow was recorded from the shale near the bottom of the borehole at 38 feet. The first positive inflow reading at 33 feet suggests that the open contact at 36.5 feet is transmissive. The increased reading at 8 feet indicates that the borehole breakout from 29 to 30 feet is also producing water. There is little evidence to suggest any further contributions from small fractures above 30 feet. This is supported by the fluid temperature log, which shows an inflection to higher temperatures below approximately 30 feet.

WL at ~8 feet
Casing at ~11 feet

MW-117B
The rock type is predominantly an arkosic sandstone, with conglomerate beds and quartz breccia from approximately 28 feet to the top of rock. The arkose is underlain by laminated shale with quartz veins to approximately 37 feet. Below the laminated shale is a graphitic shale with quartz breccia zones and pyrite. The shale bedding features dip predominantly both westerly and easterly at low angles. The predominant fracture set dips to the northwest at moderate to high angles. The other significant fracture set, with high-angle southeast dips, is associated with the laminated shale and graphitic shale contact.

Under ambient conditions, HPFM measurements showed positive inflow from the graphitic shale contact at the bottom of the well to 25 feet. At and above 25 feet, the drop in ambient flow rate could be the result of pirating by open fractures from 22 to 25 feet. Water level was below the bedrock surface at approximately 21 feet.

Measured flow rates under pumping conditions showed trends similar to those measured under ambient conditions. Positive inflow readings were recorded from the bottom of the well at 38 feet and reached maximum flow at 28 feet. The notable contributing fractures are from 37 to 39 feet, 34 to 35 feet, and the shale/arkose contact at 28 feet. As in the ambient measurements, flow rates dropped in half at 25 feet to nearly zero at 22 feet. The fluid temperature log response from 32 to 33 feet and from 37 to 39 feet confirms inflow at these intervals. The inflection to higher

temperatures above 32 feet correlates with the reduction in inflow above this depth.

WL at ~21 feet
Casing at ~10.5 feet

MW-118B
The rock types from the well bottom to 32 feet are arkose and conglomerate. From 32 feet to the bedrock surface the rock is siltstone, with shale intervals and quartz veins along bedding planes and vertical joints. The coarse texture of these rock types produces an irregular borehole wall with breakouts. The bedding-type features dip predominantly southeast at low angles, with scattered readings to the northwest and southwest. The predominant fracture set dips to the northwest at moderate to high angles. Other minor fracture sets dip northeast at high angles.

Little or no flow was observed in HPFM measurements performed under ambient conditions. Water level was below the bedrock surface at approximately 24 feet.

Under pumping conditions, HPFM measurements showed that the low flow rate measured near the well bottom remained constant to 32 feet; suggesting no contributing inflow within that interval. Above the increase in positive inflow measured at 32, the flow rates diminished to near zero at 28 feet, possibly the result of pirating fractures between 29 and 32 feet.

The fluid temperature log response from 32 to 34 feet and below 44 feet indicates inflow at these intervals.

WL at ~27 feet
Casing at ~17.5 feet

MW-129B
The rock type from the well bottom to 37 feet is interbedded shale and siltstone. From 37 to 23 feet, the rock is shale. From 23 feet to the bedrock surface, the rock is sandstone or siltstone with a weathered zone starting at 13 feet. The bedding-type features dip both westerly and easterly at low angles. The predominant fracture set dips to the east-southeast at moderate to high angles. Other minor fracture sets dip northeast at high angles.

No flow was observed in HPFM measurements performed under ambient conditions. Under pumping conditions, HPFM measurements showed no flow from the well bottom to 12 feet, where inflow was measured from a fracture located at 13.5 feet.

Amidst the effect of metal casing and proximity to the top of the water column, the fluid log responses show inflections from approximately 14 to 16 feet that are probably related to the inflow at 12 feet. Below 18 feet, the fluid log curves are flat, indicating no inflow.

WL at ~4.5 feet
Casing at ~8 feet

MW-130B
The rock intervals encountered were:

1. Shale from well bottom to 47 feet
2. Sandstone from 47 to 41.5 feet
3. Siltstone or possibly shaley sandstone from 41.5 to 28 feet
4. Shale from 28 to 18 feet
5. Weathered sandstone or siltstone from 18 feet to the bedrock surface

No bedding features were observed below 20 feet. Above 20 feet, the bedding-type features dip predominantly westerly and also easterly at low angles. Seven scattered fracture sets were measured. The predominant fracture set dips to the north at high angles.

Except for a barely discernable downward flow between 15 and 26 feet, no flow was observed in HPFM measurements performed under ambient conditions. Under pumping conditions, the first measurable inflow occurred at 26 feet from fractures located between 26 and 30 feet. Minor inflow was contributed by fractures between 26 and 20 feet.

Fluid log responses reflect the increasing flow rates from the casing bottom to the curve inflections at approximately 32 feet, below which the curves are flat through the zone of no or little flow.

WL at ~7.5 feet
Casing at ~10.5 feet

6.0 RESULTS

Specific log interpretations have been annotated on the individual logs and summarized in Section 5. In this section, we attempt to assimilate the results of individual well data and provide a cursory general interpretive spatial analysis of the data. This analysis is intended to complement any subsequent comprehensive study. A comprehensive bedrock fracture-system analysis should include information from published sources and previous site characterization investigations.

Wells 116B, 117B, and 118B are located in relatively close proximity and display similar fracture data sets. The bedding-like features display some of the same orientations, but are more variable than they are similar. Wells 116B, 117B, and 118B also contain a preponderance of coarse fractured meta-sediments displaying quartz veins and quartz breccias. These observations suggest that the wells are located within the same structural block, in which the low-grade structural deformation was sufficient to disrupt the original bedding characteristics and alter the rock fabric.

Wells 129B and 130B are more than 800 feet south of wells 116B and 117B. The bedrock in these wells is primarily shale and fine-grained silt and sandstone. The fracture set orientations

are different than those in wells 116B, 117B, and 118B, suggesting that they are situated in a different structural block.

Open fractures occur in weathered zones within the top 10 feet of open hole in MW-129B. Below this depth, the fine-grained rock is tight.

The weathering zone in MW-130B extends to 33 feet below the casing bottom, where open fractures and inflow occur. Below this depth, the fine grained rock is tight. The advanced weathering and variable fracture orientations indicate that MW-130B is near a geologic structure.

7.0 GEOPHYSICAL BOREHOLE LOGGING

7.1. Description of the Method. HGI performs borehole logging using a fully equipped field vehicle that includes a lunchbox computer, heavy-duty generator, tools, and other necessary equipment and supplies to successfully complete the work. The HGI logging system consists of a Mount Sopris Instruments 5MXA-1000 Matrix logger and MSI 4MXA-1000 and 4WNA-1000 winches; MSI 2PEA/F_0-2500Ohm-m,T,F-R combination poly-electric probe (includes fluid temperature/resistivity and natural gamma probes); MSI 2CAA-1000 three-arm caliper probe; Advanced Logic Technologies FAC40 acoustic televiewer (ATV); MSI HFP-2293 Heat Pulse Flow Meter (HPFM); and CCV WC1750 slimline dual view water well color inspection camera.

The Mount Sopris single-conductor system stores digitized log data on the hard drive of a portable computer. Logging speeds can range from 1.5 to 20 feet per minute depending on the resolution desired. All logging activities are performed in accordance with the equipment manufacturer's recommended procedures, as well as the appropriate ASTM standard. We normally clean the logging probes and wireline with non-phosphate soap and a tap water rinse during each upward run and/or after completing work on each well.

7.2. Data Analysis and Interpretation. Borehole logging data are processed as graphical logs using WellCAD for Windows© and MS Heat© (for HPFM) software systems, Excel spreadsheets, and Rockworks©. Caliper and ATV logs are compiled onto a one-sheet format to allow for more efficient graphical log analysis. Data ranges will be set to optimize the detection of readings that depart from baseline and background readings.

We use WellCAD to construct structure logs identifying notable and representative discontinuities from ATV data and superimpose them onto the ATV log. Numerical representation of the structural traces are used to calculate strike and dip values of discontinuities and subsequently used to construct rose diagrams and stereonet projections of the structural data. Apparent aperture values for discontinuities visible in the ATV log are tabulated. Acoustic images of the borehole (360 degrees) are graphically represented as false-color amplitude and travel-time logs in developed cylindrical view format on a strip log. 3-D core-like representation of the borehole can also be developed from the ATV data.

7.3. Limitations of the Method. The ATV must be properly centered in the borehole to provide clear images. Eccentricity of the ATV tool in the borehole will produce an asymmetrical pattern

of the acoustic wave front emanating from the tool, thereby making it difficult to establish a uniform background amplitude and travel-time log of the reflected energy against which the anomalous reflections can be discerned. Borehole tilt and small borehole diameters both degrade data quality.

ATV features or discontinuities may represent open or filled fractures, foliation, and mineralized or weathered zones. Interpreting the type of feature present from the ATV log requires using other logs or core data, if available. For open fractures imaged in the ATV log, the width of the feature does not represent the true aperture. A portion of the acoustic energy hitting the fracture surface is diffracted. The recorded arrivals of these diffractions will appear on the log above and below the normal position of the fracture edges as lower-amplitude arrivals with longer travel times. Subtle changes in amplitude within each discontinuity can be used to approximate the true aperture; however, the measurement is approximate and should be designated as “apparent aperture.”

APPENDIX A

REPORT WELL LOGS
(ATV Image & Composite Logs)

TT-116B
TT-117B
TT-118B
TT-129B
TT-130B

Hager GeoScience Inc.	Geophysical Logging Record: **Poly-Electric & Fluid Logs**
Site: NUSC	Boring #: TT-116B
Location: Middletown, RI	Date Logged: 6-21-10
Client: TTNUS	Logged By: JB, KS

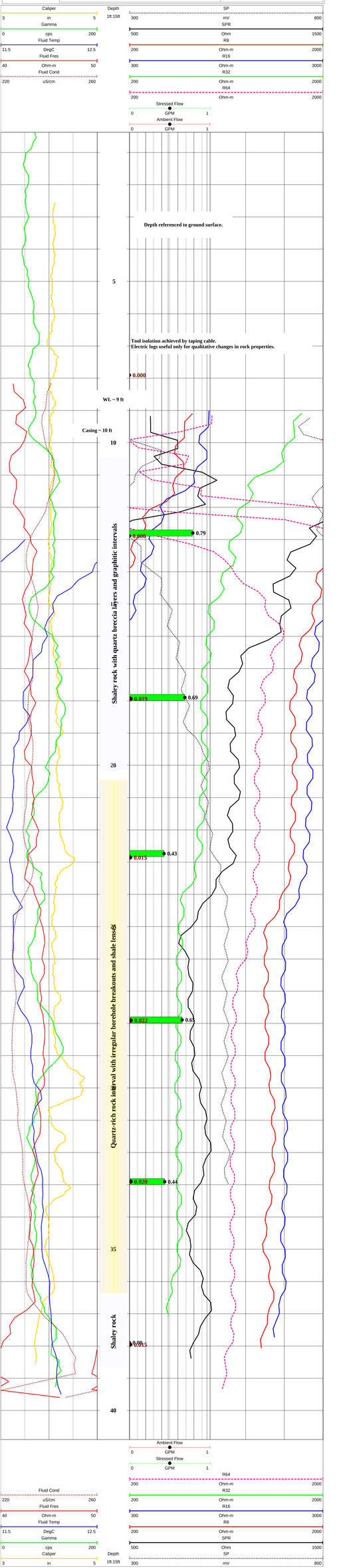

Hager GeoScience Inc.	Geophysical Logging Record: *ATV Image Logs*	
Site: NUSC		Boring #: TT-116B
Location: Middletown, RI		Date Logged: 7-6-2010
Client: TTNUS		Logged By: JB, KS

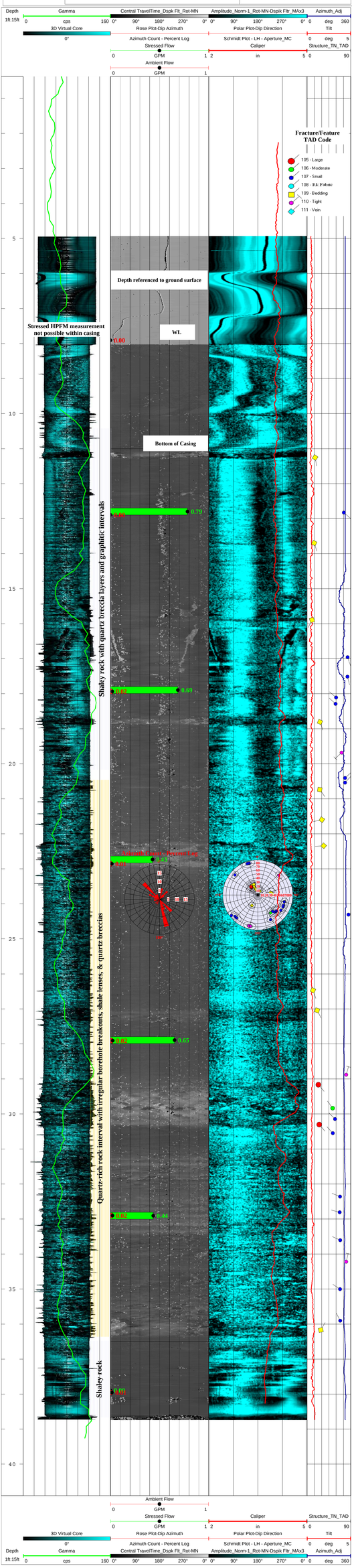

Hager GeoScience Inc.

Geophysical Logging Record:

Poly-Electric & Fluid Logs

Site: NUSC	Boring #: TT-117B
Location: Middletown, RI	Date Logged: 6-28-2010
Client: TTNUS	Logged By: JB, KS

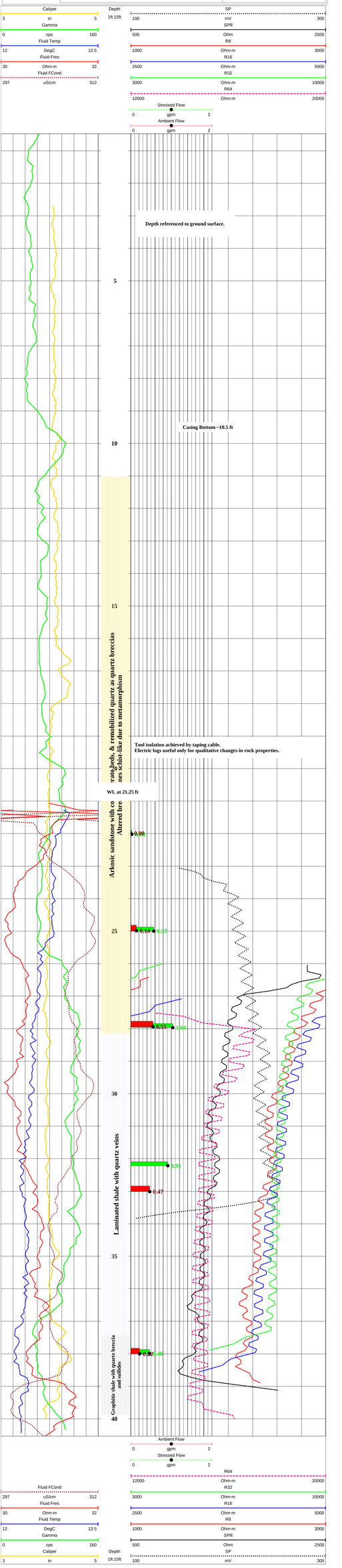

Hager GeoScience Inc.	Geophysical Logging Record: *ATV Image Log*
Site: NUSC	Boring #: TT-117B
Location: Middletown, RI	Date Logged: 7-6-2010
Client: TTNUS	Logged By: JB, KS

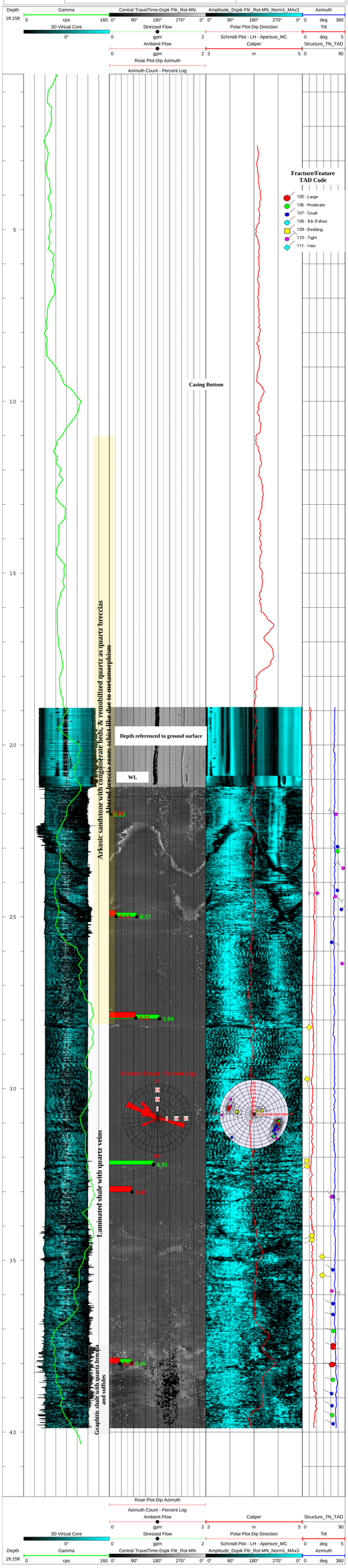

Hager GeoScience Inc.

Geophysical Logging Record:
Poly-Electric & Fluid Logs

Site: NUSC	Boring #: TT-118B
Location: Middletown, RI	Date Logged: 6-28-2010
Client: TTNUS	Logged By: JB, KS

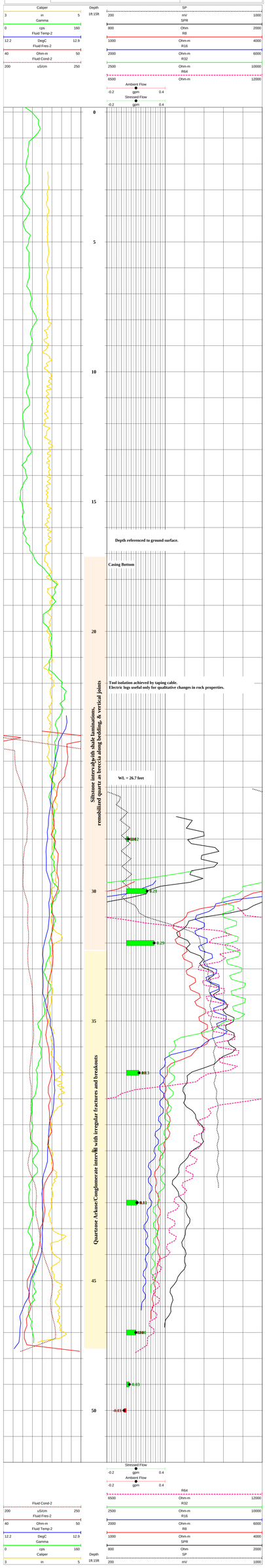

Hager GeoScience Inc.		Geophysical Logging Record: *ATV Image Log*
Site: NUSC		Boring #: TT-118B
Location: Middletown, RI		Date Logged: 7-6-2010
Client: TTNUS		Logged By: JB, KS

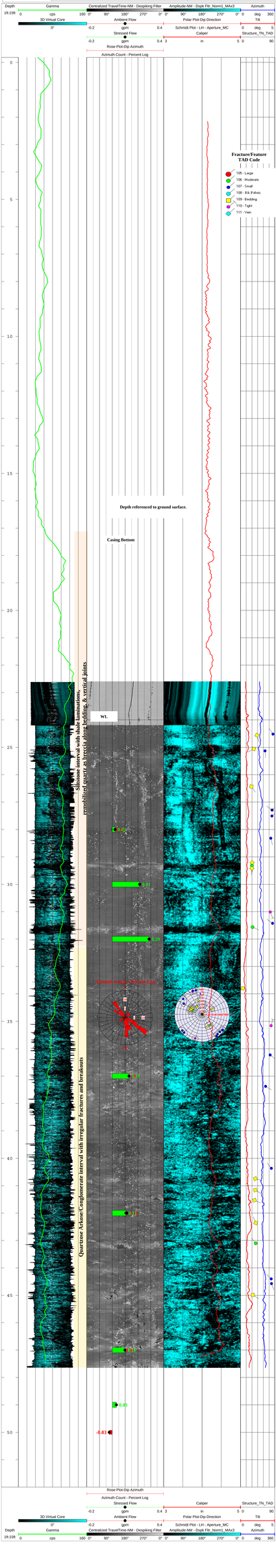

Hager GeoScience Inc.	Geophysical Logging Record: *Poly-Electric and Fluid Logs*
Site: NUSC	Boring #: TT-129B
Location: Middletown, RI	Date Logged: 7-27-2010
Client: TTNUS	Logged By: JB, KS

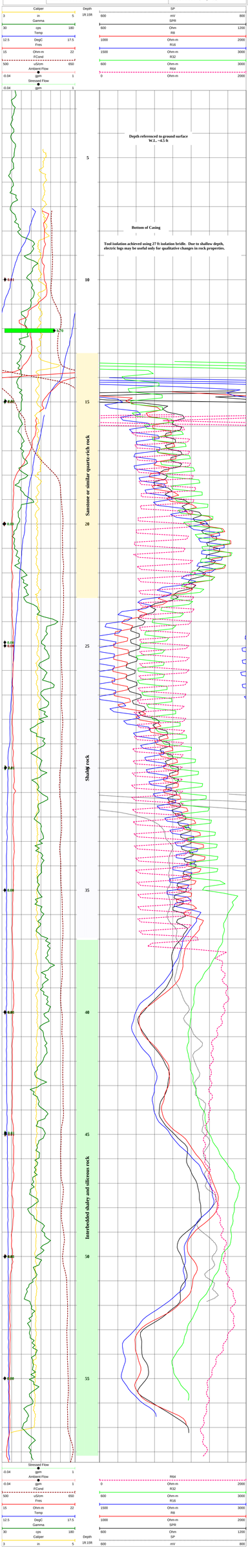

Hager GeoScience Inc.		Geophysical Logging Record: *ATV Image Logs*
Site: NUSC		Boring #: TT-129B
Location: Middletown, RI		Date Logged: 7-27-2010
Client: TTNUS		Logged By: JB, KS

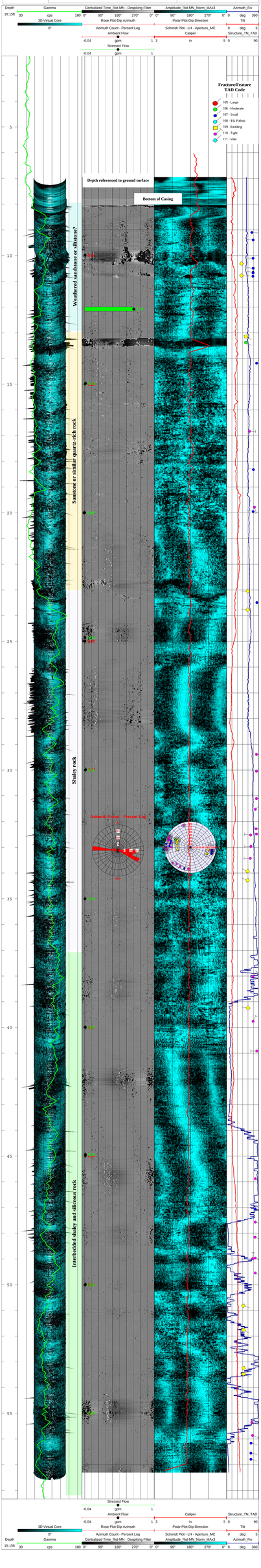

Hager GeoScience Inc.

Geophysical Logging Record:
Poly-Electric and Fluid Logs

Site: NUSC | Boring #: TT-130B

Location: Middletown, RI | Date Logged: 7-28-2010

Client: TTNUS | Logged By: JB, KS

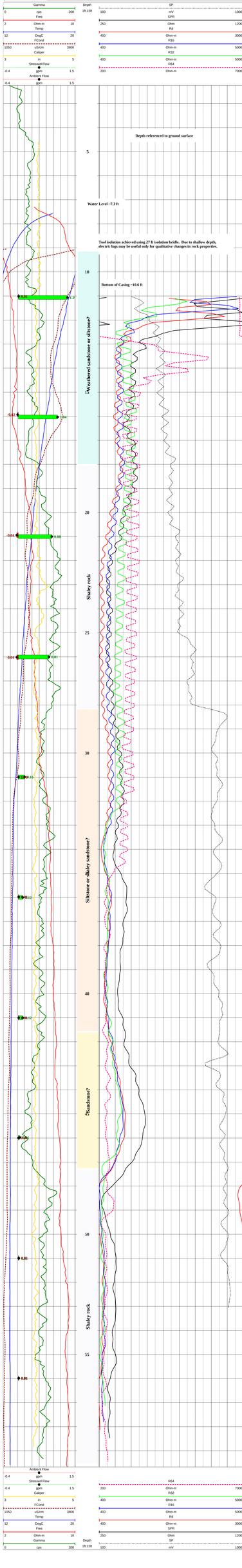

Hager GeoScience Inc.	Geophysical Logging Record: *ATV Image Logs*
Site: NUSC	Boring #: TT-130B
Location: Middletown, RI	Date Logged: 7-28-2010
Client: TTNUS	Logged By: JB, KS

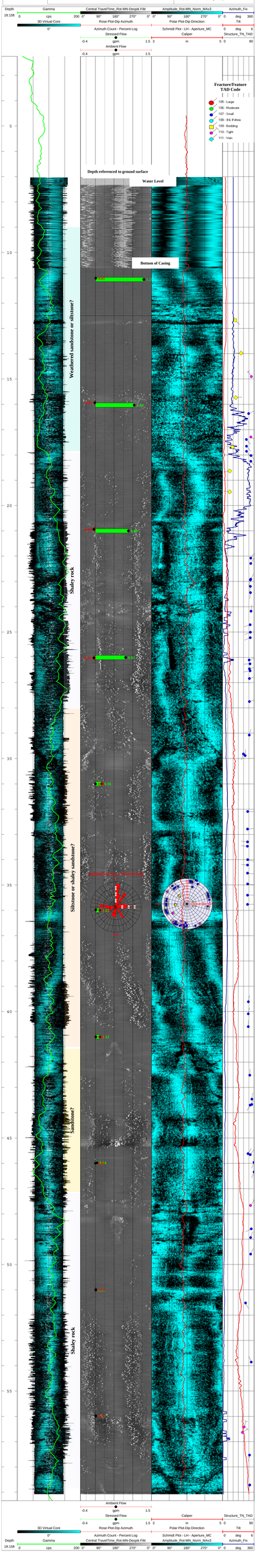

STRUCTURE TABLES B1-B5

TT-116B
TT-117B
TT-118B
TT-129B
TT-130B

Table B1
TT-116B Well
Structure Data

Depth (ft bgl)	True Dip Azimuth	True Dip Angle	Apparent Aperture Code	Code Desc.	Code Color	Strike Azimuth (RHR)	Strike Direction (RHR)	Dip Direction Quadrant	Strike Direction Quadrant
11.3	169.8	16.5	109	Bedding	Yellow	79.8	NE	SE	NE
12.8	131.1	75.9	107	Small	Blue	41.1	NE	SE	NE
13.7	162.3	14.8	109	Bedding	Yellow	72.3	NE	SE	NE
15.9	207.0	10.2	109	Bedding	Yellow	117.0	SE	SW	NW
17.0	161.4	83.8	107	Small	Blue	71.4	NE	SE	NE
17.5	164.7	83.1	107	Small	Blue	74.7	NE	SE	NE
18.1	310.7	59.7	107	Small	Blue	220.7	SW	NW	NE
18.3	312.9	58.8	107	Small	Blue	222.9	SW	NW	NE
18.8	159.5	26.6	109	Bedding	Yellow	69.5	NE	SE	NE
19.7	227.0	71.1	110	Tight	Magenta	137.0	SE	SW	NW
20.4	46.9	78.3	107	Small	Blue	316.9	NW	NE	NW
20.5	43.1	78.3	107	Small	Blue	313.1	NW	NE	NW
20.7	145.0	26.1	109	Bedding	Yellow	55.0	NE	SE	NE
21.6	257.9	30.5	109	Bedding	Yellow	167.9	SE	SW	NW
22.3	265.7	34.4	109	Bedding	Yellow	175.7	SE	SW	NW
24.3	52.3	85.4	107	Small	Blue	322.3	NW	NE	NW
26.5	161.4	12.4	109	Bedding	Yellow	71.4	NE	SE	NE
27.0	152.6	20.8	109	Bedding	Yellow	62.6	NE	SE	NE
28.9	16.4	80.9	110	Tight	Magenta	286.4	NW	NE	NW
29.2	138.7	23.5	105	Large	Red	48.7	NE	SE	NE
29.8	324.4	52.9	106	Moderate	Green	234.4	SW	NW	NE
30.2	315.6	57.9	107	Small	Blue	225.6	SW	NW	NE
30.3	139.2	25.0	105	Large	Red	49.2	NE	SE	NE
30.6	317.6	53.0	107	Small	Blue	227.6	SW	NW	NE
32.4	292.2	68.0	107	Small	Blue	202.2	SW	NW	NE
32.8	284.5	67.2	107	Small	Blue	194.5	SW	NW	NE
33.6	295.4	68.5	107	Small	Blue	205.4	SW	NW	NE
34.2	13.6	80.7	110	Tight	Magenta	283.6	NW	NE	NW
35.0	303.5	68.2	107	Small	Blue	213.5	SW	NW	NE
35.9	332.6	68.3	107	Small	Blue	242.6	SW	NW	NE
36.2	30.1	28.5	109	Bedding	Yellow	300.1	NW	NE	NW

Table B2
TT-117 Well
Structure Data

Depth (ft bgl)	True Dip Azimuth	True Dip Angle	Apparent Aperture Code	Code Desc.	Code Color	Strike Azimuth (RHR)	Strike Direction (RHR)	Dip Direction Quadrant	Strike Direction Quadrant
22.0	303.3	71.0	110	Tight	Magenta	213.3	SW	NW	NE
23.0	320.2	73.9	107	Small	Blue	230.2	SW	NW	NE
23.1	318.5	74.1	106	Moderate	Green	228.5	SW	NW	NE
23.6	317.6	85.8	110	Tight	Magenta	227.6	SW	NW	NE
24.2	312.7	73.6	107	Small	Blue	222.7	SW	NW	NE
24.3	270.2	31.7	110	Tight	Magenta	180.2	SW	NW	NE
24.4	122.9	69.3	110	Tight	Magenta	32.9	NE	SE	NE
24.8	43.7	82.3	107	Small	Blue	313.7	NW	NE	NW
25.7	107.3	61.7	107	Small	Blue	17.3	NE	SE	NE
26.4	88.3	83.5	110	Tight	Magenta	358.3	NW	NE	NW
28.2	266.9	14.7	109	Bedding	Yellow	176.9	SE	SW	NW
29.7	171.9	10.0	109	Bedding	Yellow	81.9	NE	SE	NE
32.1	224.9	9.1	109	Bedding	Yellow	134.9	SE	SW	NW
32.3	241.3	9.7	109	Bedding	Yellow	151.3	SE	SW	NW
33.1	310.7	64.9	107	Small	Blue	220.7	SW	NW	NE
33.2	109.0	61.5	110	Tight	Magenta	19.0	NE	SE	NE
34.3	246.7	20.3	109	Bedding	Yellow	156.7	SE	SW	NW
34.4	245.8	20.7	109	Bedding	Yellow	155.8	SE	SW	NW
34.9	96.5	41.5	109	Bedding	Yellow	6.5	NE	SE	NE
35.3	307.1	64.2	107	Small	Blue	217.1	SW	NW	NE
35.4	98.5	41.7	109	Bedding	Yellow	8.5	NE	SE	NE
35.9	104.9	62.0	110	Tight	Magenta	14.9	NE	SE	NE
36.3	292.3	64.6	107	Small	Blue	202.3	SW	NW	NE
36.6	282.2	64.4	107	Small	Blue	192.2	SW	NW	NE
37.1	292.3	65.6	106	Moderate	Green	202.3	SW	NW	NE
37.5	291.2	64.7	105	Large	Red	201.2	SW	NW	NE
37.5	100.5	64.5	105	Large	Red	10.5	NE	SE	NE
38.0	105.8	63.9	105	Large	Red	15.8	NE	SE	NE
38.0	285.2	61.5	105	Large	Red	195.2	SW	NW	NE
38.5	285.2	64.6	106	Moderate	Green	195.2	SW	NW	NE
38.9	296.6	61.5	107	Small	Blue	206.6	SW	NW	NE
39.2	303.0	62.4	107	Small	Blue	213.0	SW	NW	NE
39.5	298.6	62.6	106	Moderate	Green	208.6	SW	NW	NE
39.8	298.3	64.9	107	Small	Blue	208.3	SW	NW	NE

Table B3
TT-118 Well
Structure Data

Depth (ft bgl)	True Dip Azimuth	True Dip Angle	Apparent Aperture Code	Code Desc.	Code Color	Strike Azimuth (RHR)	Strike Direction (RHR)	Dip Direction Quadrant	Strike Direction Quadrant
24.5	326.4	85.4	107	Small	Blue	236.4	SW	NW	NE
24.6	163.9	43.3	109	Bedding	Yellow	73.9	NE	SE	NE
25.1	240.8	34.6	109	Bedding	Yellow	150.8	SE	SW	NW
25.1	176.6	64.5	107	Small	Blue	86.6	NE	SE	NE
26.4	146.2	28.8	109	Bedding	Yellow	56.2	NE	SE	NE
27.3	44.7	83.2	107	Small	Blue	314.7	NW	NE	NW
27.3	308.3	83.0	107	Small	Blue	218.3	SW	NW	NE
27.5	50.8	82.5	107	Small	Blue	320.8	NW	NE	NW
28.3	165.6	79.6	107	Small	Blue	75.6	NE	SE	NE
29.2	178.0	30.3	109	Bedding	Yellow	88.0	NE	SE	NE
29.3	177.7	30.3	106	Moderate	Green	87.7	NE	SE	NE
29.4	184.5	29.8	109	Bedding	Yellow	94.5	SE	SW	NW
31.0	157.4	78.4	110	Tight	Magenta	67.4	NE	SE	NE
31.4	306.4	84.4	107	Small	Blue	216.4	SW	NW	NE
31.6	114.1	31.5	106	Moderate	Green	24.1	NE	SE	NE
33.8	235.1	6.1	109	Bedding	Yellow	145.1	SE	SW	NW
35.2	16.5	80.5	110	Tight	Magenta	286.5	NW	NE	NW
36.2	129.1	78.1	107	Small	Blue	39.1	NE	SE	NE
37.4	120.6	66.0	107	Small	Blue	30.6	NE	SE	NE
40.4	322.0	81.1	107	Small	Blue	232.0	SW	NW	NE
40.7	108.2	39.0	109	Bedding	Yellow	18.2	NE	SE	NE
41.2	121.5	38.9	109	Bedding	Yellow	31.5	NE	SE	NE
41.5	115.3	36.7	109	Bedding	Yellow	25.3	NE	SE	NE
42.4	335.2	40.6	109	Bedding	Yellow	245.2	SW	NW	NE
43.1	321.9	40.2	106	Moderate	Green	231.9	SW	NW	NE
44.4	314.4	80.7	107	Small	Blue	224.4	SW	NW	NE
44.6	158.3	81.7	107	Small	Blue	68.3	NE	SE	NE
45.0	123.1	32.7	109	Bedding	Yellow	33.1	NE	SE	NE

Table B4
TT-129B Well
Structure Data

Depth (ft bgl)	True Dip Azimuth	True Dip Angle	Apparent Aperture Code	Code Desc.	Code Color	Strike Azimuth (RHR)	Strike Direction (RHR)	Dip Direction Quadrant	Strike Direction Quadrant
9.1	93.5	70.6	107	Small	Blue	3.5	NE	SE	NE
9.4	273.6	74.3	107	Small	Blue	183.6	SW	NW	NE
10.1	271.5	74.1	107	Small	Blue	181.5	SW	NW	NE
10.3	80.3	41.7	109	Bedding	Yellow	350.3	NW	NE	NW
10.5	276.7	73.9	107	Small	Blue	186.7	SW	NW	NE
10.7	279.9	74.1	107	Small	Blue	189.9	SW	NW	NE
10.7	16.1	74.2	107	Small	Blue	286.1	NW	NE	NW
10.8	95.7	41.7	109	Bedding	Yellow	5.7	NE	SE	NE
10.8	276.8	73.7	107	Small	Blue	186.8	SW	NW	NE
13.2	117.6	54.0	109	Bedding	Yellow	27.6	NE	SE	NE
13.4	117.2	53.8	106	Moderate	Green	27.2	NE	SE	NE
14.2	91.6	84.0	107	Small	Blue	1.6	NE	SE	NE
16.8	90.2	64.0	110	Tight	Magenta	0.2	NE	SE	NE
18.3	286.9	74.9	107	Small	Blue	196.9	SW	NW	NE
19.8	162.0	77.9	110	Tight	Magenta	72.0	NE	SE	NE
20.0	282.1	74.4	107	Small	Blue	192.1	SW	NW	NE
23.0	268.7	59.2	109	Bedding	Yellow	178.7	SE	SW	NW
23.5	98.4	84.5	107	Small	Blue	8.4	NE	SE	NE
23.8	272.7	58.9	109	Bedding	Yellow	182.7	SW	NW	NE
29.4	87.2	83.7	110	Tight	Magenta	357.2	NW	NE	NW
30.0	90.3	83.5	110	Tight	Magenta	0.3	NE	SE	NE
31.1	84.1	83.5	110	Tight	Magenta	354.1	NW	NE	NW
31.5	48.9	80.4	110	Tight	Magenta	318.9	NW	NE	NW
32.3	85.3	82.6	110	Tight	Magenta	355.3	NW	NE	NW
32.5	87.6	83.6	110	Tight	Magenta	357.6	NW	NE	NW
32.5	277.5	67.4	110	Tight	Magenta	187.5	SW	NW	NE
33.0	268.5	68.1	110	Tight	Magenta	178.5	SE	SW	NW
33.4	270.6	66.4	110	Tight	Magenta	180.6	SW	NW	NE
33.9	292.2	58.4	109	Bedding	Yellow	202.2	SW	NW	NE
34.3	290.8	58.4	109	Bedding	Yellow	200.8	SW	NW	NE
38.0	39.4	73.8	110	Tight	Magenta	309.4	NW	NE	NW
39.2	277.8	59.9	109	Bedding	Yellow	187.8	SW	NW	NE
39.8	27.9	74.2	110	Tight	Magenta	297.9	NW	NE	NW
40.9	271.3	84.7	110	Tight	Magenta	181.3	SW	NW	NE
45.9	118.1	80.3	110	Tight	Magenta	28.1	NE	SE	NE
47.1	111.3	80.1	107	Small	Blue	21.3	NE	SE	NE
47.6	107.6	79.9	110	Tight	Magenta	17.6	NE	SE	NE
48.2	110.7	79.4	110	Tight	Magenta	20.7	NE	SE	NE
49.0	117.8	80.2	110	Tight	Magenta	27.8	NE	SE	NE
49.0	5.9	73.2	110	Tight	Magenta	275.9	NW	NE	NW
49.6	112.7	80.1	110	Tight	Magenta	22.7	NE	SE	NE
50.8	106.4	47.1	109	Bedding	Yellow	16.4	NE	SE	NE
51.8	120.9	47.6	109	Bedding	Yellow	30.9	NE	SE	NE
53.2	114.6	47.5	109	Bedding	Yellow	24.6	NE	SE	NE
53.5	117.6	47.8	109	Bedding	Yellow	27.6	NE	SE	NE
55.4	99.0	70.4	110	Tight	Magenta	9.0	NE	SE	NE
55.9	109.4	72.6	110	Tight	Magenta	19.4	NE	SE	NE
56.2	101.1	68.2	107	Small	Blue	11.1	NE	SE	NE
56.6	101.2	68.1	107	Small	Blue	11.2	NE	SE	NE
56.8	108.0	68.1	107	Small	Blue	18.0	NE	SE	NE

Table B5
TT-130B Well
Structure Data

Depth (ft bgl)	True Dip Azimuth	True Dip Angle	Apparent Aperture Code	Code Desc.	Code Color	Strike Azimuth (RHR)	Strike Direction (RHR)	Dip Direction Quadrant	Strike Direction Quadrant
12.7	135.4	36.3	109	Bedding	Yellow	45.4	NE	SE	NE
14.0	269.8	52.7	109	Bedding	Yellow	179.8	SE	SW	NW
14.9	326.7	82.3	110	Tight	Magenta	236.7	SW	NW	NE
15.7	86.2	38.0	109	Bedding	Yellow	356.2	NW	NE	NW
16.4	64.8	74.3	107	Small	Blue	334.8	NW	NE	NW
17.3	122.0	80.9	110	Tight	Magenta	32.0	NE	SE	NE
17.4	139.4	68.0	107	Small	Blue	49.4	NE	SE	NE
17.7	140.7	68.3	107	Small	Blue	50.7	NE	SE	NE
17.7	274.7	28.4	109	Bedding	Yellow	184.7	SW	NW	NE
17.9	145.1	68.4	107	Small	Blue	55.1	NE	SE	NE
18.0	141.2	81.3	107	Small	Blue	51.2	NE	SE	NE
18.3	140.5	80.6	107	Small	Blue	50.5	NE	SE	NE
18.6	260.8	20.4	109	Bedding	Yellow	170.8	SE	SW	NW
19.5	278.4	20.5	109	Bedding	Yellow	188.4	SW	NW	NE
22.1	34.3	80.5	107	Small	Blue	304.3	NW	NE	NW
22.3	30.4	80.4	107	Small	Blue	300.4	NW	NE	NW
22.9	27.9	80.6	107	Small	Blue	297.9	NW	NE	NW
22.9	192.4	79.4	107	Small	Blue	102.4	SE	SW	NW
23.2	189.1	79.2	107	Small	Blue	99.1	SE	SW	NW
23.4	187.9	79.8	107	Small	Blue	97.9	SE	SW	NW
24.2	6.5	81.0	107	Small	Blue	276.5	NW	NE	NW
24.7	251.9	78.6	107	Small	Blue	161.9	SE	SW	NW
25.0	248.8	79.2	107	Small	Blue	158.8	SE	SW	NW
25.2	247.5	79.0	107	Small	Blue	157.5	SE	SW	NW
26.1	71.0	76.0	107	Small	Blue	341.0	NW	NE	NW
26.3	267.5	78.3	107	Small	Blue	177.5	SE	SW	NW
26.5	73.6	76.6	107	Small	Blue	343.6	NW	NE	NW
26.5	259.8	78.8	107	Small	Blue	169.8	SE	SW	NW
26.8	70.9	76.6	107	Small	Blue	340.9	NW	NE	NW
27.8	69.6	76.4	107	Small	Blue	339.6	NW	NE	NW
29.1	15.7	76.1	107	Small	Blue	285.7	NW	NE	NW
29.8	198.3	59.6	107	Small	Blue	108.3	SE	SW	NW
29.9	4.7	64.4	107	Small	Blue	274.7	NW	NE	NW
32.1	90.5	71.5	107	Small	Blue	0.5	NE	SE	NE
32.8	85.0	71.3	107	Small	Blue	355.0	NW	NE	NW
33.3	276.6	71.3	107	Small	Blue	186.6	SW	NW	NE
33.5	275.9	71.0	107	Small	Blue	185.9	SW	NW	NE
34.0	103.6	71.5	107	Small	Blue	13.6	NE	SE	NE
34.2	274.1	71.2	107	Small	Blue	184.1	SW	NW	NE
34.5	97.9	71.3	107	Small	Blue	7.9	NE	SE	NE
35.0	99.2	71.5	107	Small	Blue	9.2	NE	SE	NE
35.4	88.2	71.2	107	Small	Blue	358.2	NW	NE	NW
35.8	88.9	71.2	107	Small	Blue	358.9	NW	NE	NW
39.6	8.7	73.6	107	Small	Blue	278.7	NW	NE	NW
40.1	10.1	73.3	107	Small	Blue	280.1	NW	NE	NW
40.6	0.5	73.5	107	Small	Blue	270.5	NW	NE	NW
42.5	1.9	77.7	107	Small	Blue	271.9	NW	NE	NW
43.5	7.2	83.5	107	Small	Blue	277.2	NW	NE	NW
43.7	7.7	83.4	107	Small	Blue	277.7	NW	NE	NW
43.7	208.7	78.6	107	Small	Blue	118.7	SE	SW	NW
45.6	31.8	72.5	107	Small	Blue	301.8	NW	NE	NW

Table B5
TT-130B Well
Structure Data

Depth (ft bgl)	True Dip Azimuth	True Dip Angle	Apparent Aperture Code	Code Desc.	Code Color	Strike Azimuth (RHR)	Strike Direction (RHR)	Dip Direction Quadrant	Strike Direction Quadrant
45.7	36.9	78.9	107	Small	Blue	306.9	NW	NE	NW
46.0	200.7	89.8	107	Small	Blue	110.7	SE	SW	NW
46.3	203.0	89.9	107	Small	Blue	113.0	SE	SW	NW
47.7	36.0	79.8	110	Tight	Magenta	306.0	NW	NE	NW
48.6	243.3	81.8	107	Small	Blue	153.3	SE	SW	NW
48.9	18.4	80.1	107	Small	Blue	288.4	NW	NE	NW
49.6	25.4	80.0	107	Small	Blue	295.4	NW	NE	NW
51.5	153.0	65.7	107	Small	Blue	63.0	NE	SE	NE
53.9	338.8	82.0	107	Small	Blue	248.8	SW	NW	NE
56.4	18.4	61.8	110	Tight	Magenta	288.4	NW	NE	NW
56.6	55.7	56.6	110	Tight	Magenta	325.7	NW	NE	NW
57.5	188.7	77.0	107	Small	Blue	98.7	SE	SW	NW
58.7	193.5	77.5	107	Small	Blue	103.5	SE	SW	NW

APPENDIX C.

ROSE DIAGRAMS
AND
POLAR PLOTS

TT-116B
TT-117B
TT-118B
TT-129B
TT-130B

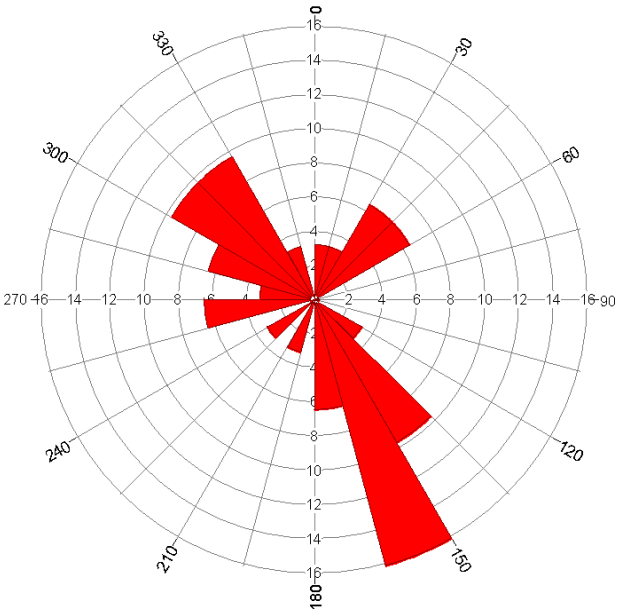

TT-116B Well (dip azimuth)

Calculation Method .... Frequency
Class Interval ..... 15 Degrees
Length Filtering ..... Deactivated
Azimuth Filtering ..... Deactivated
Data Type ..... Unidirectional
Population 31
Maximum Percentage .... 16.1 Percent
Mean Percentage ..... 6.2 Percent
Standard Deviation .... 3.62 Percent
Vector Mean ..... 258.57 Degrees
Confidence Interval ... 161.03 Degrees
R-mag 0.09

TT-116B Well

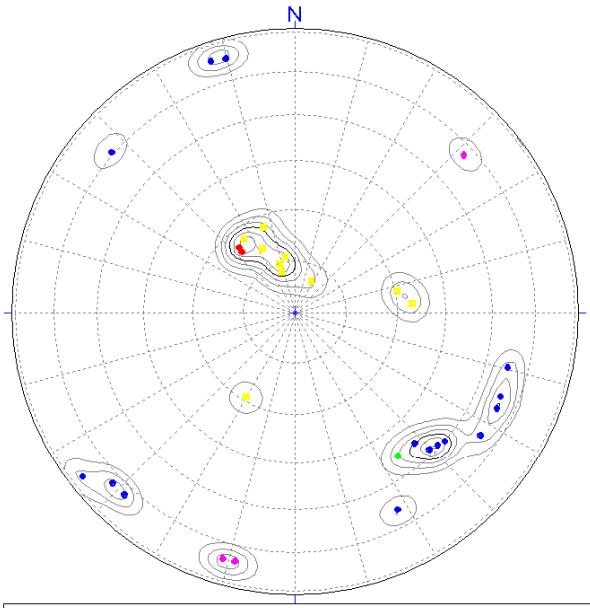

Projection ..... Schmidt (Equal Area)
Number of Sample Points 31
Mean Lineation Azimuth 125.1
Mean Lineation Plunge 56.6
Great Circle Azimuth 328.1
Great Circle Plunge 75.6
1st Eigenvalue 0.45
2nd Eigenvalue 0.34
3rd Eigenvalue 0.21
LN (E1 / E2) 0.28
LN (E2 / E3) 0.483
(LN(E1/E2)] / (LN(E2/E3)) .. 0.58
Spherical variance 0.4238
Rbar 0.5762

NUSC

Polar Plot Diagram - Dip Azimuth & Angle

- Large Apperture
- Moderate Apperture
- Small Apperture
- Tight Apperture
- Rock Fabric (circle)
- Bedding (square)
- Vein (square)

Hager GeoScience, Inc.

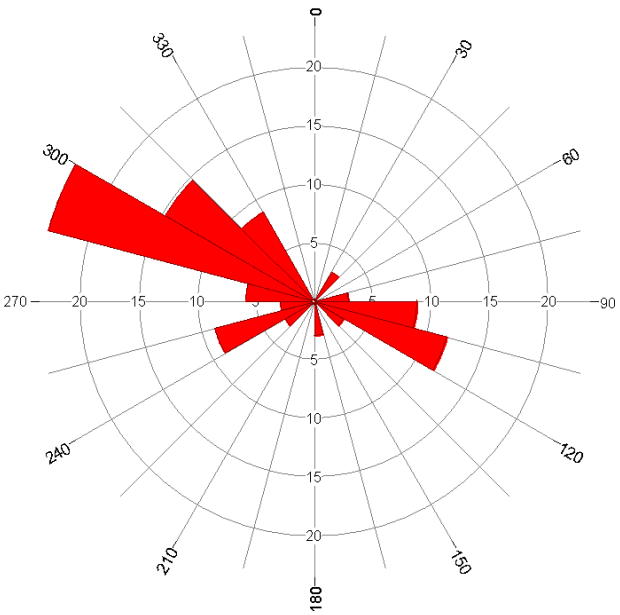

TT-117B Well (dip azimuth)

Calculation Method .... Frequency
Class Interval ..... 15 Degrees
Length Filtering ..... Deactivated
Azimuth Filtering ..... Deactivated
Data Type ..... Unidirectional
Population 34
Maximum Percentage .... 23.5 Percent
Mean Percentage ..... 7.7 Percent
Standard Deviation .... 6.19 Percent
Vector Mean ..... 291.98 Degrees
Confidence Interval ... 41.12 Degrees
R-mag 0.32

TT-117B Well

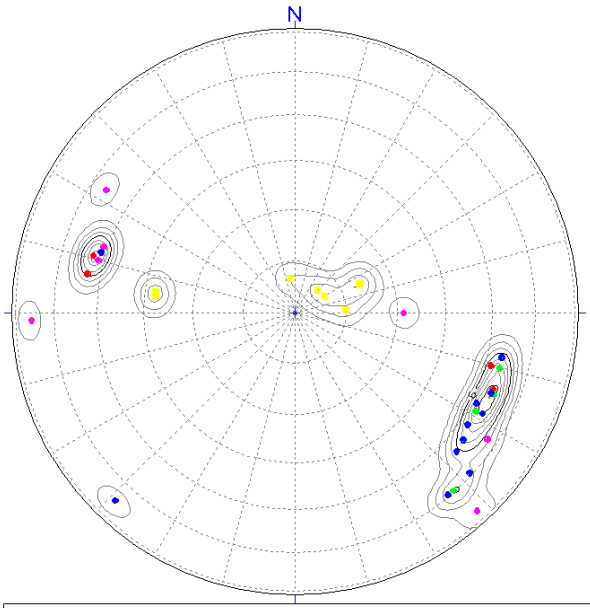

Projection ..... Schmidt (Equal Area)
Number of Sample Points 34
Mean Lineation Azimuth 114.2
Mean Lineation Plunge 18.9
Great Circle Azimuth 294.2
Great Circle Plunge 89.9
1st Eigenvalue 0.633
2nd Eigenvalue 0.298
3rd Eigenvalue 0.069
LN (E1 / E2) 0.754
LN (E2 / E3) 1.47
(LN(E1/E2)] / (LN(E2/E3)) .. 0.513
Spherical variance 0.4192
Rbar 0.5808

NUSC
Polar Plot Diagram - Dip Azimuth & Angle

- Large Apperture
- Moderate Apperture
- Small Apperture
- Tight Apperture
- Rock Fabric (circle)
- Bedding (square)
- Vein (square)

Hager GeoScience, Inc.

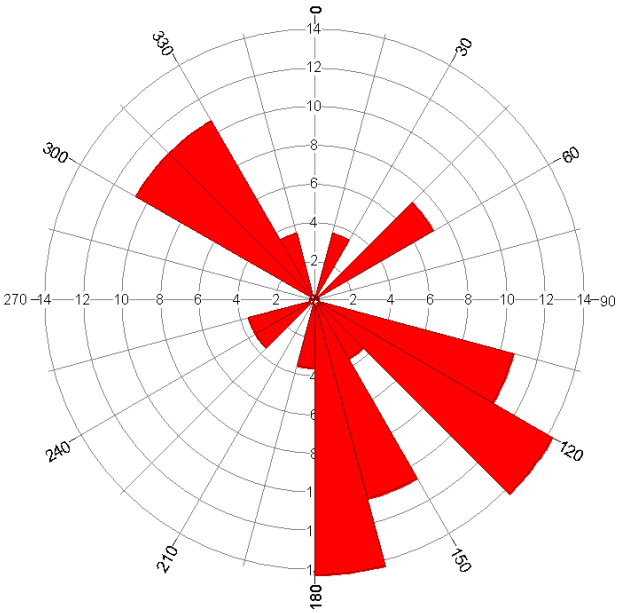

TT-118B Well (dip azimuth)

Calculation Method .... Frequency
Class Interval ..... 15 Degrees
Length Filtering ..... Deactivated
Azimuth Filtering ..... Deactivated
Data Type ..... Unidirectional
Population 28
Maximum Percentage .... 14.3 Percent
Mean Percentage ..... 7.7 Percent
Standard Deviation .... 4.34 Percent
Vector Mean ..... 147.41 Degrees
Confidence Interval ... 63.86 Degrees
R-mag 0.23

TT-118B Well

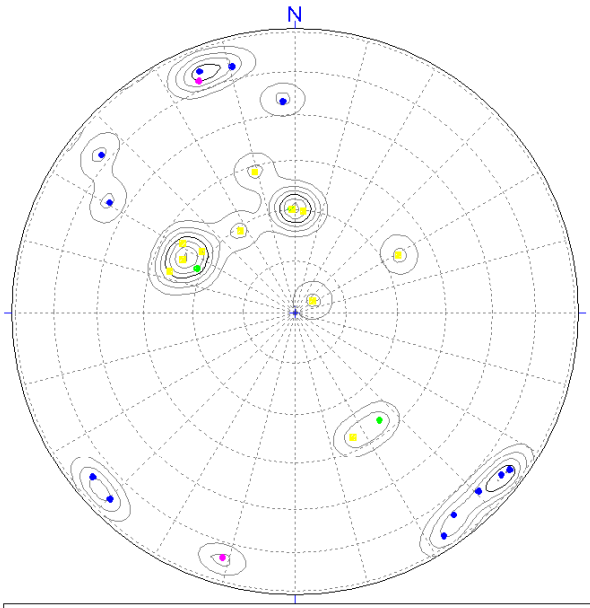

Projection ..... Schmidt (Equal Area)
Number of Sample Points 28
Mean Lineation Azimuth 327
Mean Lineation Plunge 33.7
Great Circle Azimuth 326.6
Great Circle Plunge 89.4
1st Eigenvalue 0.561
2nd Eigenvalue 0.28
3rd Eigenvalue 0.159
LN (E1 / E2) 0.693
LN (E2 / E3) 0.57
(LN(E1/E2)] / (LN(E2/E3)) .. 1.217
Spherical variance 0.4791
Rbar 0.5209

NUSC

Polar Plot Diagram - Dip Azimuth & Angle

- Large Apperture
- Moderate Apperture
- Small Apperture
- Tight Apperture
- Rock Fabric (circle)
- Bedding (square)
- Vein (square)

Hager GeoScience, Inc.

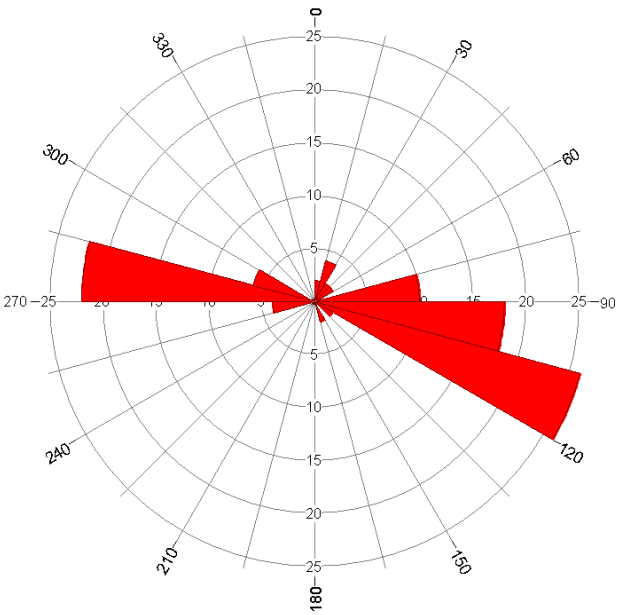

TT-129B Well (dip azimuth)

Calculation Method .... Frequency
Class Interval ..... 15 Degrees
Length Filtering ..... Deactivated
Azimuth Filtering ..... Deactivated
Data Type ..... Unidirectional
Population 50
Maximum Percentage .... 26 Percent
Mean Percentage ..... 8.3 Percent
Standard Deviation .... 8.73 Percent
Vector Mean ..... 92.72 Degrees
Confidence Interval ... 40.8 Degrees
R-mag 0.27

TT-129B Well

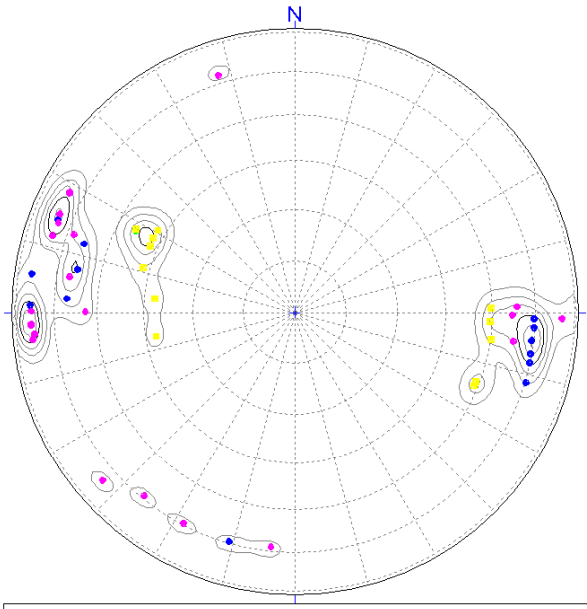

Projection ..... Schmidt (Equal Area)
Number of Sample Points 50
Mean Lineation Azimuth 278.7
Mean Lineation Plunge 6.1
Great Circle Azimuth 98.9
Great Circle Plunge 88.7
1st Eigenvalue 0.738
2nd Eigenvalue 0.143
3rd Eigenvalue 0.119
LN (E1 / E2) 1.639
LN (E2 / E3) 0.19
(LN(E1/E2)] / (LN(E2/E3)) .. 8.626
Spherical variance 0.5842
Rbar 0.4158

NUSC
Polar Plot Diagram - Dip Azimuth & Angle

- Large Apperture
- Moderate Apperture
- Small Apperture
- Tight Apperture
- Rock Fabric (circle)
- Bedding (square)
- Vein (square)

Hager GeoScience, Inc.

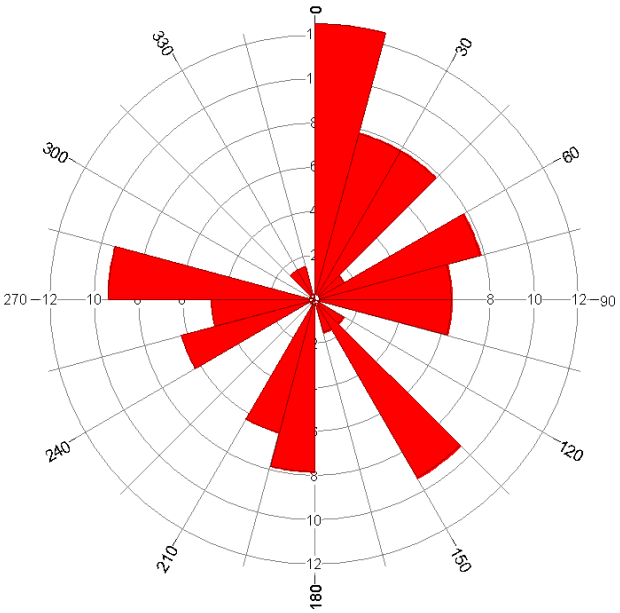

TT-130B Well (dip azimuth)

Calculation Method .... Frequency
Class Interval ..... 15 Degrees
Length Filtering ..... Deactivated
Azimuth Filtering ..... Deactivated
Data Type ..... Unidirectional
Population 64
Maximum Percentage .... 12.5 Percent
Mean Percentage ..... 5.9 Percent
Standard Deviation .... 3.34 Percent
Vector Mean ..... 60.69 Degrees
Confidence Interval ... 69.73 Degrees
R-mag 0.14

TT-130B Well

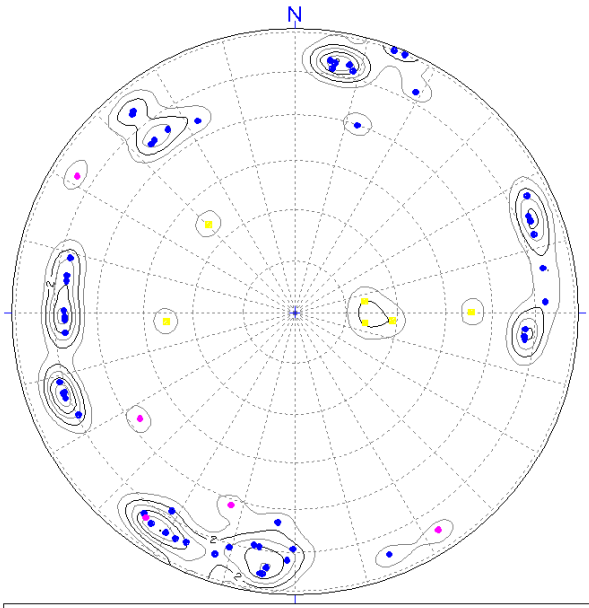

Projection ..... Schmidt (Equal Area)
Number of Sample Points 64
Mean Lineation Azimuth 218
Mean Lineation Plunge 5.3
Great Circle Azimuth 176.6
Great Circle Plunge 8
1st Eigenvalue 0.528
2nd Eigenvalue 0.348
3rd Eigenvalue 0.124
LN (E1 / E2) 0.416
LN (E2 / E3) 1.036
(LN(E1/E2)] / (LN(E2/E3)) .. 0.402
Spherical variance 0.6646
Rbar 0.3354

NUSC

Polar Plot Diagram - Dip Azimuth & Angle

- Large Apperture
- Moderate Apperture
- Small Apperture
- Tight Apperture
- Rock Fabric (circle)
- Bedding (square)
- Vein (square)

Hager GeoScience, Inc.

ATTACHMENT C

FIELD LOGS

Tetra Tech NUS, Inc.

GROUNDWATER LEVEL MEASUREMENT SHEET

Project Name: NUSC Disposal Area
Location: Newport RI
Weather Conditions: Overcast 75° Humid
Tidally Influenced: Yes ___ No ✓
Project No.: 112G02124
Personnel: MH WP
Measuring Device: Solinst OilWater Interface
Remarks:

Well or Piezometer Number	Date	Time	Elevation of Reference Point (feet)*	Total Well Depth (feet)*	Water Level Indicator Reading (feet)*	Thickness of Free Product (feet)*	Groundwater Elevation (feet)*	Comments
MW120	8/5/98	0859			22.75 TOC			Need lock
MW127B	8/5/2010	0910			22.80 TOPVC			Need lock
MW118-D2	8/5	0912			26.30 TOPVC			Need lock
MW118-D1		0913			26.35 TOPVC			Need lock
MW128B		0914			24.65 TOPVC			Need lock
MW116B-D1		0915			9.32 TOPVC			Need lock
MW116B-D2		0916			9.65 TOPVC			Need lock
MW117-D2		0917			23.20 TOPVC			Need lock
MW117-D1		0918			22.88 TOPVC			Need lock
MW03		0920			23.75 TOPVC			Need lock
MW114B		0922			21.45 TOC			Need lock
MW122	✓	0925			5.00 TOPVC			Need lock
MW115		0928			7.37 TOC			Need lock
MW01C		0931			13.50 TOPVC			Need lock
MW110B		0932			13.71 TOC			Need lock
MW104B		0934			14.88 TOC			Need lock
MW105B		0935			18.45 TOC			Need lock
MW64B		0936			17.90 TOPVC			Need lock
MW112 (SW)		0937			13.85 TOC			Need lock
MW112 (NE)		0941			14.53 TOPVC			Need lock
MW113		0944			13.57 TOC			Need lock
MW111		0946			12.98 TOC			Need lock
MW123		1115			7.07 TOPVC			Need side lock
MW136B		1122			6.60 TOC			
MW9A	✓	1124			DRY			Need lock

* All measurements to the nearest 0.01 foot

Tetra Tech NUS, Inc.

GROUNDWATER LEVEL MEASUREMENT SHEET

Project Name: NUSC Disposal Area
Location: Middletown RI
Weather Conditions:
Tidally Influenced: Yes ___ No ___
Project No.: 112G02174
Personnel: MH WP
Measuring Device:
Remarks:

Well or Piezometer Number	Date	Time	Elevation of Reference Point (feet)*	Total Well Depth (feet)*	Water Level Indicator Reading (feet)*	Thickness of Free Product (feet)*	Groundwater Elevation (feet)*	Comments
MW9B	8/6/2010	1125			7.95 TOC			Need lock
MW29		1128			4.85 TOC			
MW08A		~~1129~~ 1130			5.45 TOPVC			Need Lock
MW08B		1131			6.12 TOC			Need Lock
MW11D		1138			5.60 TOPVC			Needs Replacing
MW07~~B~~A		1140			6.11 TOPVC			Replace RB
MW07MB		1141			6.55 TOC			
~~MW07B~~ MW11		1143			9.20 TOPVC			Need lock
MW06A		1145			10.20 TOPVC			Need lock
MW06B		1146			10.35 TOC			Need Lock
MW02B		1153			14.50 TOC			Need lock
MW03S		1156			17.12 TOPVC			Need Lock
MW03D		1157			16.99 TOC			Need lock
MW12SB		1201			6.51 TOC			Sheared Bolts
MW07B	↓	1207			5.87 TOC			
MW08B	No Reading Bees Nest							
MW09	8/5/10	1211			8.00 TOC			
MW06D		12.17			3.60 TOC			Sheared Bolts
MW06S		12.23			4.80 TOPVC			
MWBA		~~4.55~~ 1227			4.55 TOPVC			Need Lock
MW13B		1228			4.55 TOC			Need Lock
MW12		1230			3.75 TOPVC			Need Lock
MW12B		1257			4.40 TOC			Need Lock
MW10I	↓	1300			11.90 TOC			Sheared Bolts
MW10O	Could Not get Lid to read bar off							

* All measurements to the nearest 0.01 foot

TETRA TECH NUS, INC.

WELL DEVELOPMENT DATA SHEET

Well No.: MW-116B-01

PROJECT: Site 08 RI
PROJECT NO.: 112G02124
SAMPLE ID: NA

DATE: 8/2/10
WEATHER: Sunny 70's
PERSONNEL: RC/WP

Well Screen Depth: 14 / 29 ft. bgs
H&S Monitoring Instrument Reading 0.0

Pump Type/Material: Watterra
Pump Intake Depth: Screened

Total Purge Volume = 130 (gal)
Data Recorded By: RC/WP

Time	Water Level ft below top PVC	Volume mL	Flow Rate mL/min	Temp °C	pH	Sp Cond mS/cm	DO mg/L	Turbidity NTU	Comments
0913	9.05	—	—	—	—	—	—	—	Initial
0940	24.00			13.48	9.94	357	4.25	>999	cloudy
0943	out of gas	~10 gal							
1015	9.90	got gas - continue development							
1016	~~9.90~~ 16.40	10 gal	—	13.11	6.64	313	2.66	291	
1030	20.50	18 gal	—	12.81	6.67	295	2.48	926	
1045	21.80	27 gal		12.84	6.48	289	2.01	195	lower to bottom
1100	30.00	35 gal		13.50	6.33	290	3.19	>2000	slowed pump
1115	22.50	45 gal		12.95	6.49	289	2.54	>1000	
1130	24.30	57 gal		13.04	4.56	287	2.75	>1000	
1145	24.30	70 gal		12.82	5.79	286	—	>1000	
1200	25.00	80 gal		13.07	5.67	287	—	874	
1215	25.20	90 gal		12.93	5.31	289	3.11	998	
1230	25.20	100 gal		12.98	5.42	287	3.04	>1000	
1245	24.80	110 gal	—	12.95	5.14	288	3.01	>1000	
1300	24.90	120 gal	—	12.98	5.01	287	2.97	896	
1315	25.30	130 gal	—	12.82	5.10	286	3.00	902	

TtNUS Form 0013

Page ___ of ___

TETRA TECH NUS, INC. | **WELL DEVELOPMENT DATA SHEET** | **Well No.:** MW-16B-D2

PROJECT: _____
PROJECT NO.: 112G02124
SAMPLE ID: NA

DATE: 8/2/10
WEATHER: Sunny 70's
PERSONNEL: RC/WR

Well Screen Depth: 29 / 39 ft. bgs
H&S Monitoring Instrument Reading 0.0

Pump Type/Material: Waterra
Pump Intake Depth: screened interval

Total Purge Volume = 110 (gal)
Data Recorded By: RC

Time	Water Level ft below top PVC	Volume mL	Flow Rate mL/min	Temp °C	pH	Sp Cond mS/cm	DO mg/L	Turbidity NTU	Comments
1210	Bailed dry ~approx 5 gal very silty.								
1230	16.50								
1315	bailed 25 gal.								
1410	11.02	Pump on							
1415	12.45	25 gal		14.10	3.78	337	2.88	494	
1430	12.50	30		14.07	5.44	337	3.73	73	
1445	12.65	50	—	13.13	4.84	338	3.26	75.6	
1500	13.25	~~60~~	1 gal/min	12.65	4.53	336	2.87	21.9	
1515	13.40	75	—	12.44	5.36	335	2.63	10.5	
1530	13.55	85	—	12.40	5.65	336	3.84	4.87	
1535	13.40	90	—	12.25	5.70	333	3.03	1.86	
1540	13.60	95	—	12.34	5.84	333	2.96	3.97	
1545	13.60	100	1 gal/min	12.28	5.46	333	3.07	3.48	
1550	13.65	105	1 gal/min	12.36	5.38	334	3.02	3.04	

TtNUS Form 0013

Page ___ of ___

TETRA TECH NUS, INC. | **WELL DEVELOPMENT DATA SHEET** | **Well No.:** MW-117B-D1

PROJECT: NUWC 08
PROJECT NO.: 112G02124-F1.FS
SAMPLE ID: _____

DATE: 8-3-10
WEATHER: Sunny 85°
PERSONNEL: Walt Payon

Well Screen Depth: _____ / _____ ft. bgs
H&S Monitoring Instrument Reading 0.0

Pump Type/Material: _____
Pump Intake Depth: _____

Total Purge Volume = _____ (gal)
Data Recorded By: Walt Payon

Time	Water Level ft below top PVC	Volume mL	Flow Rate mL/min	Temp °C	pH	Sp Cond mS/cm	DO mg/L	Turbidity NTU	Comments
1307	22.90	—	—	—	—	—	—	—	Initial
1310	23.45			16.91	5.20	286	8.87	>999	Cloudy
1315	23.00			16.85	5.49	271	8.46	>999	↓
1325	23.40	20 gal		14.87	5.98	272	6.46	208	↓
1335	23.40	28 gal		14.58	5.92	271	6.70	86.2	Slightly
1345	23.40	40 gal		13.61	5.98	270	6.86	45.1	↓
1355	23.40	50 gal		12.95	5.98	271	6.93	21.7	↓
1405	23.40	60 gal		14.29	6.05	274	7.22	37.8	↓
1415	23.40	70 gal		14.20	6.09	273	6.95	98.3	↓
1425	23.40	—		14.10	5.95	273	6.62	53.5	↓
1435	23.40	90 gal		14.11	6.09	274	6.76	39.7	↓
1445	23.40	—		14.47	5.96	278	6.92	28.2	↓
1455	23.40	110 gal		14.21	5.90	275	6.85	91.7	↓
1505	23.40	—		14.97	5.84	271	6.62	5.19	clean
1515	23.40	120 gal		14.97	5.84	271	6.62	8.01	↓
1520	23.40	—		14.97	5.84	271	6.62	11.5	↓
1525	23.40	—		13.54	5.66	277	7.66	10.8	↓
1530	23.40	140 gal		13.60	5.60	277	7.64	8.97	↓

TETRA TECH NUS, INC. | **WELL DEVELOPMENT DATA SHEET** | **Well No.:** MW-117B-01

PROJECT: NWC 08
PROJECT NO.: 112G02124-F1.FS
SAMPLE ID: _____

DATE: 8-3-10
WEATHER: Sunny 90°
PERSONNEL: Matt Payne

Well Screen Depth: _____ / _____ ft. bgs
H&S Monitoring Instrument Reading 0.0

Pump Type/Material: _____
Pump Intake Depth: _____

Total Purge Volume = _____ (gal)
Data Recorded By: Matt Payne

Time	Water Level ft below top PVC	Volume mL	Flow Rate mL/min	Temp °C	pH	Sp Cond mS/cm	DO mg/L	Turbidity NTU	Comments
1540	23.40	↓		13.79	5.05	278	7.60	8.50	clear
1550	23.40			14.00	5.10	278	7.55	5.11	
1600	23.40			14.01	5.09	278	7.79	5.31	
1605	23.40	160 gals		14.20	5.05	278	7.65	3.68	

TtNUS Form 0013

TETRA TECH NUS, INC. | **WELL DEVELOPMENT DATA SHEET** | **Well No.:** MW17-D2

PROJECT: _____
PROJECT NO.: 112G02124-F1.FS
SAMPLE ID: _____

DATE: 8-3-10
WEATHER: Sunny 70°
PERSONNEL: Walt Payun

Well Screen Depth: _____ / _____ ft. bgs
H&S Monitoring Instrument Reading 0.0

Pump Type/Material: _____
Pump Intake Depth: _____

Total Purge Volume = 55~ (gal)
Data Recorded By: Walt Payun

Time	Water Level ft below top PVC	Volume mL	Flow Rate mL/min	Temp °C	pH	Sp Cond mS/cm	DO mg/L	Turbidity NTU	Comments
0834	23.12 ← Start Surge on well								Initial
0835	23.35			13.60	8.24	280	3.53	953	Cloudy
0840	23.40			12.82	7.63	280	3.00	293	↓
0850	23.40	10 gals		13.02	7.04	282	3.25	68.9	Slightly
0900	23.50	18 gals		12.82	6.92	286	3.78	26.0	
0902	← Stop Surge to meet Scituate portable at Badge office →								
0933	23.50			13.29	6.44	279	2.30	144	
0943	23.55	25 gallons		13.06	6.40	284	3.50	52.9	
0953	23.60	35 gallons		13.02	6.52	285	3.40	24.8	
0955	← Stop Surge to meet Scituate portable at Access gate. →								
1030	23.40	~~40 gal~~		13.27	6.38	287	3.45	15.4	↓
1040	23.50	40 gal		13.03	6.27	283	3.75	10.8	Clean
1050	23.50	45 gal		15.03	6.47	287	3.80	5.12	
1055	23.50			12.80	6.49	287	3.93	2.70	↓
1100	23.50			12.92	6.49	288	3.82	2.67	
1105	23.50	55 gal		13.01	6.50	288	3.87	2.71	

TtNUS Form 0013

TETRA TECH NUS, INC. | **WELL DEVELOPMENT DATA SHEET** | **Well No.:** MW118-02

PROJECT: NUWC 08
PROJECT NO.: 112G02124-F1.FS
SAMPLE ID: _____

DATE: 8-4-10
WEATHER: Overcast 70°
PERSONNEL: Walt Payson

Well Screen Depth: _____ / _____ ft. bgs
H&S Monitoring Instrument Reading 0.0

Pump Type/Material: _____
Pump Intake Depth: _____

Total Purge Volume = 40 (gal)
Data Recorded By: Walt Payson

Time	Water Level ft below top PVC	Volume mL	Flow Rate mL/min	Temp °C	pH	Sp Cond mS/cm	DO mg/L	Turbidity NTU	Comments
0930	26.30	Start	Surge ON	well	MW 118-02				Initial
0940	26.30	—		13.60	7.91	715	NA	>999	Cloudy
0945	39.10	—		14.08	6.99	279		>999	
0900	33.00	5 gal		17.37	6.50	272		>999	
0915	33.50	—		15.02	6.45	287		>999	
0930	33.20	8 gal		14.85	6.19	278		>999	
0945	34.60	16 gal		13.34	6.11	251		>999	
1000	36.80	20 gal		14.23	6.08	233		>999	
1015	36.20	—		14.51	6.11	238		>999	
1030	36.30	22 gal		14.50	6.27	134		>999	
1045	38.00	—		14.54	6.22	225		>999	
1100	36.25	28 gal		13.79	6.29	121		606	
1115	35.32	—		15.80	6.31	131		734	
1130	33.00	30 gal		15.07	6.07	224		>999	
1145	32.20	—		16.12	6.28	209		>999	
1200	31.40	38 gal		16.06	6.30	239		>999	
1215	32.00	—		13.50	6.21	242		>999	
1230	33.00	40 gal		13.97	6.23	237		>999	

TtNUS Form 0013

TETRA TECH NUS, INC. | **WELL DEVELOPMENT DATA SHEET** | **Well No.:** 118B02

PROJECT: NUSC Disposal Area
PROJECT NO.: 112602124
SAMPLE ID: N4

DATE: 8/4/10
WEATHER: Overcast 80°
PERSONNEL: M. Horton
Initial WL 26.30 Top of PVC

Well Screen Depth: _____ / _____ ft. bgs
H&S Monitoring Instrument Reading 0.0

Pump Type/Material: Foot Valve, Hand Pump
Pump Intake Depth: Various across screen

Total Purge Volume = 55 (gal)
Data Recorded By: M. Horton

Time	Water Level ft below top PVC	Volume ~~mL~~ gal	Flow Rate mL/min	Temp °C	pH	Sp Cond mS/cm	DO mg/L	Turbidity NTU	Comments
0826	Begin Pumping				~~7.27~~	~~233~~	~~N.A~~	~~1214~~	
0839	26.40	1.5		16.39	7.27	233	N.A	1214	
0848	26.41	5		14.52	6.07	225		247	
0856	26.40	10		14.50	6.32	226		91.2	
0912	26.40	20		14.05	5.87	222		58.0	
0923	26.45	25		13.87	6.37	221		31.3	
0934	26.45	30		14.27	6.41	232		32.4	
0946	26.45	35		14.52	6.32	219		11.4	
0957	26.45	40		14.87	6.28	220		13.6	
1005	26.45	45		14.76	6.19	219		9.88	
1017	26.45	50		14.53	6.15	216		12.8	
1027	26.45	53		14.00	6.03	218		16.8	
1033	26.45	55		14.30	6.22	219		8.6	
End Purge									

TtNUS Form 0013

TETRA TECH NUS, INC. | **WELL DEVELOPMENT DATA SHEET** | **Well No.:** MW-127B

PROJECT: 112G02124
PROJECT NO.: NUSC
SAMPLE ID: ?

DATE: 7/20/10
WEATHER: Sunny Humid 85°
PERSONNEL: RC/WP/CDS.

WL 24.6 TOR

Well Screen Depth: 18 / 52 ft. bgs (open hole)
H&S Monitoring Instrument Reading 0.0

Pump Type/Material: 4in Submersible
Pump Intake Depth: 20-50

Total Purge Volume = _____ (gal)
Data Recorded By: R Clark

Time	Water Level ft below top ~~PVC~~ 6in Steel	Volume mL	Flow Rate mL/min	Temp °C	pH	Sp Cond mS/cm	DO mg/L	Turbidity NTU	Comments
1400	25.75	—	—	—	—	—	—	—	Initial
1405	25.75			12.76	7.36	390	9.96	>999	Cloudy
1407	26.08	~~20~~ gallons	1 min	12.18	7.13	418	9.83	399	
1410	26.20	2c gallons	1 min	12.19	6.99	414	10.42	245	

TtNUS Form 0013

Page ___ of ___

TETRA TECH NUS, INC. | **WELL DEVELOPMENT DATA SHEET** | **Well No.:** MW-127B

PROJECT: Site 08 NUSC
PROJECT NO.: 112G02124
SAMPLE ID: none

DATE: 7/21/10
WEATHER: cloudy humid 75°
PERSONNEL: RC WP

Well Screen Depth: open hole 18 / ~~40~~ 40.0 ft. bgs
H&S Monitoring Instrument Reading 0.0

Pump Type/Material: Submersible
Pump Intake Depth: 45 ft

Total Purge Volume = 200 (gal)
Data Recorded By: RC

Time	Water Level ft below top PVC	Volume mL	Flow Rate mL/min	Temp °C	pH	Sp Cond mS/cm	DO mg/L	Turbidity NTU	Comments
0855	23.02 Top of Riser	—	—	—	—	—	—	—	Initial
0856	26.40		550gal/	13.40	8.07	322	9.17	>999	Cloudy
0858	28.80		3 min	12.14	6.60	354	8.86	861	↓
0900	29.00		↓	12.56	6.69	404	9.90	150	↓
0902	29.25		↓	12.14	6.38	411	8.97	105	↓
0904	29.80		↓	12.10	6.17	422	9.10	67.6	Slightly
0906	~~30.60~~		↓	12.12	6.02	430	8.17	68.7	↓
0908	~~30.60~~ 31.05		↓	12.11	5.98	436	7.47	53.4	Clear

TtNUS Form 0013

TETRA TECH NUS, INC.

WELL DEVELOPMENT DATA SHEET Well No.: MW-127B

PROJECT: _____
PROJECT NO.: 112G02124
SAMPLE ID: NA

DATE: 8/2/10
WEATHER: Sunny 80°
PERSONNEL: K Clark

Well Screen Depth: _____ / _____ ft. bgs
H&S Monitoring Instrument Reading 0.0

Pump Type/Material: Whale PVC
Pump Intake Depth: Screened interval

Total Purge Volume = 100 (gal)
Data Recorded By: RC

Time	Water Level ft below top PVC	Volume ~~mL~~ gal	Flow Rate ~~mL~~/min gal	Temp °C	pH	Sp Cond mS/cm	DO mg/L	Turbidity NTU	Comments
1301	22.79	DTB=	47.55						
1315	23.51	10	1	13.15	6.67	470	1.13	121	
1325	23.62	15	1	12.77	6.54	473	0.81	20.9	
1340	23.77	45	1 1/2	12.65	6.53	479	0.78	4.57	
1350	23.85	60	1 1/2	12.42	6.50	482	0.76	2.39	
1400	23.85	70	1	12.45	6.49	482	0.81	2.29	
1410	23.85	80	1	12.48	6.51	484	0.75	0.76	
1420	23.85	95	1 1/2	12.50	6.47	491	0.72	0.69	
.									

TtNUS Form 0013

Page ___ of ___

TETRA TECH NUS, INC. | **WELL DEVELOPMENT DATA SHEET** | **Well No.:** MW-128B

PROJECT: Site 08 RI
PROJECT NO.: 112G02124
SAMPLE ID: NA

DATE: 8/3/10
WEATHER: Cloudy 70°
PERSONNEL: RClark

Well Screen Depth: _____ / _____ ft. bgs
H&S Monitoring Instrument Reading 0.0

Pump Type/Material: Whale PVC
Pump Intake Depth: Screened interval

Total Purge Volume = 135 (gal)
Data Recorded By: RC

Time	Water Level ft below top PVC	Volume ~~mL~~ gal	Flow Rate ~~mL~~/min gal	Temp °C	pH	Sp Cond mS/cm	DO mg/L	Turbidity NTU	Comments
0812	24.64	Bailed 2 gal							
0845	25.10	10 gal	1 gal/min	12.91	7.22	410	1.27	36.6	
0900	25.12	30 gal	1 gal/min	12.33	5.16	411	0.50	22.9	
0913	25.14	50 gal	1½ gal	12.34	5.53	418	0.60	10.54	
0925	25.16	65 gal	1½ gal	12.25	5.66	420	0.65	6.75	
0936	25.18	75	1	12.26	5.54	426	0.67	6.30	
0945	25.20	85	1	12.20	5.42	428	0.60	6.40	
0955	25.20	100	1½	12.27	5.41	426	0.55	4.48	
1005	25.22	120	1½	12.26	5.42	428	0.55	2.09	
1015	25.23	130	1	12.23	5.49	427	0.51	0.98	

TtNUS Form 0013

TETRA TECH NUS, INC. | **WELL DEVELOPMENT DATA SHEET** | **Well No.:** MW-129B

PROJECT: NUSC Supplemental RI
PROJECT NO.: 112602174
SAMPLE ID: None

DATE: 7/21/10
WEATHER: Sunny humid 80's
PERSONNEL: RC/DP CDS

Well Screen Depth: open hole 8 / 58 ft. bgs
H&S Monitoring Instrument Reading 0.0

Pump Type/Material: whale/PVC
Pump Intake Depth: 58

Total Purge Volume = 150 (gal)
Data Recorded By: RC

Time	Water Level ft below top PVC	Volume mL	Flow Rate mL/min	Temp °C	pH	Sp Cond mS/cm	DO mg/L	Turbidity NTU	Comments
1320	4.60								
1324	pump ON		approx					~~>2000~~	
1325	5.20	0	1½ gal	14.27	4.30	671	7.99	>2000	
1335	6.30	15 gal	per min	13.85	4.52	674	6.89	>2000	surged
1345	6.60	30 gal	↓	14.48	4.68	542	3.21	5.30	surged
1355	6.70	40 gal	1 gal/min	14.71	4.28	580	2.24	0.00	
1405	6.80	50 gal	↓	14.62	4.29	574	2.30	0.00	
1415	6.90	60 gal	↓	14.78	4.27	564	2.27	0.00	
1425	7.00	70 gal	↓	14.75	4.28	556	2.29	0.00	
1435	7.10	80 gal	↓	14.84	3.86	553	2.24	0.00	
1445	7.00	90 gal	↓	14.90	3.13	552	2.30	0.00	
1455	7.00	100 gal	↓	14.94	2.95	555	2.40	0.00	
1505	7.10	120 gal	1½ gal	14.96	2.75	560	2.50	0.00	
1510	7.10	140 gal	per min	14.91	2.65	565	2.45	0.00	

TtNUS Form 0013

Page ___ of ___

TETRA TECH NUS, INC. | **WELL DEVELOPMENT DATA SHEET** | **Well No.:** MW-130B

PROJECT: NUSC
PROJECT NO.: 112G02124
SAMPLE ID: none

DATE: 7/21/10
WEATHER: humid cloudy 75
PERSONNEL: RC WP (CDS)

Well Screen Depth: 10½ (open hole) / 60½ ft. bgs
H&S Monitoring Instrument Reading: 0.0

Pump Type/Material: Wake pump
Pump Intake Depth: 58 ft bgs.

Total Purge Volume = _____ (gal)
Data Recorded By: RC WP

Time	Water Level ft below top PVC	Volume ~~mL~~	Flow Rate ~~mL/min~~	Temp °C	pH	Sp Cond mS/cm	DO mg/L	Turbidity NTU	Comments
1027	6.60 from TOR								
1040	8.20		~1 gal per min.	15.38	5.47	1027	4.47	42.6	surged
1042	8.70	5 gal		14.06	5.40	1023	5.83	~~65.4~~ 54.4	NTU
1044	8.75	15 gal		14.33	4.80	1057	5.25	78.4	surged
1055	9.00	~~35~~ gal		14.23	3.36	1056	4.52	~~64.7~~ 57.1	NTU
1110	9.05	50 gal		14.00	3.10	1051	4.32	20.7	surged
1115	9.05	65 gal	|	14.40	3.54	1066	4.40	17.4	
1130	9.05	75 gal	|	14.25	4.04	1058	4.42	12.1	
1145	9.05	85 gal	|	14.08	4.09	1056	4.29	6.00	
1155	9.05	90 gal	|	14.10	4.05	1054	4.30	5.08	

TtNUS Form 0013

very humid - difficult to get NTU readings - bottle bgs up immediately

Page ___ of ___

TETRA TECH NUS, INC.

SAMPLE LOG SHEET - "LOW FLOW" GROUNDWATER

Site Name: Site 08 Disposal Area Naval Station Newport, Newport, RI
Sample ID: DA-MW03B-062810

Tetra Tech NUS Charge No. 112g02124 HHS
QC: DA-MW Dup01 - 062810 (If applicable)

Sample Method: Micro Bladder pump
Depth Sampled: 25.00 Feet Screened Interval Depth NA feet
Sample Date & Time: 6/28/10 1168 hours 01 /Dup
Sampler(s): Walt Pazon
Data Recorded By: Walt Pazon Signature: WP
Notes:

H&S Survey Meter 0.0 PPM Field Instrument Group (A)/B/C/D
Pre-pump insertion WL 23.60 ft Post - pump insertion WL 23.60 ft

Analysis	Bottle Lot #	Analysis	Bottle Lot #	Analysis	Bottle Lot #
VOCs		1,4 Dioxane		Sulfide	
TOC		PCDN		Pb/Ni/Fe	
MEE		Ammonia		Ferrous Iron	

Clock Time 24hr	Water Depth below MP ft	Pump Dial 1	Purge Rate ml/min	Cumm. Volume Purged liters	Temp °C	Spec. Cond. 2 uS/cm	pH	ORP/Eh3 mv	DO mg/L	Turbidity NTU	Comments
0935	23.60	—	—	—	—	—	—	—	—	—	Initial
0953	23.70		100		20.27	228	6.23	126.0	4.13	412	Cloudy
0958	23.70				19.80	233	6.20	135.9	3.50	316	
1003	23.70				19.69	239	6.22	144.5	3.07	240	
1008	23.70				19.71	245	6.22	151.0	2.82	172	
1013	23.70				19.86	249	6.22	156.0	2.72	130	
1018	23.70				19.95	252	6.22	161.7	2.77	114	
1023	23.70				20.07	254	6.23	165.9	2.74	100	
1028	23.70				20.03	254	6.26	178.0	3.05	85.0	Slightly
1033	23.70				23.25	261	6.25	183.5	3.11	60.0	
1038	23.70				23.00	261	6.25	184.5	3.18	49.4	
1043	23.70				22.86	262	6.24	186.0	3.16	40.3	
1048	23.70				22.77	262	6.23	186.0	3.14	36.5	
1053	23.70				22.66	263	6.23	191.0	3.04	25.9	
1058	23.70										

TtNUS Form 0009

1. Pump dial setting (for example: hertz, cycle/min, etc.)
2. Siemens per cm (same as umhos/cm) at 25 °C.
3. Oxidation reduction potential (stand in for Eh).

TETRA TECH NUS, INC.

SAMPLE LOG SHEET - "LOW FLOW" GROUNDWATER

Site Name: Site 08
Sample ID: DA-MW03B-062810

Tetra Tech NUS Charge No. 112G02124 - F1.FS
QC: [redacted] DA-MWDUP01-062810 (If applicable)

Clock Time 24hr	Water Depth below MP ft	Pump Dial 1	Purge Rate ml/min	Cumm. Volume Purged liters	Temp °C	Spec. Cond. 2 uS/cm	pH	ORP/Eh3 mv	DO mg/L	Turbidity NTU	Comments
1103	23.70		100	↓	22.52	264	6.22	196.4	3.06	[redacted]3.0	Clear
1108	23.70		↓	↓	22.42	265	6.21	201.0	2.92	2.92	↓
1113	23.70		↓	0.5 gallons	22.41	265	6.21	203.4	2.91	3.00	↓
		PKM parameters			Stabilize						
		Sampling Begins									

TtNUS Form 0009

1. Pump dial setting (for example: hertz, cycle/min, etc.)
2. Siemens per cm (same as umhos/cm) at 25 °C.
3. Oxidation reduction potential (stand in for Eh).

TETRA TECH NUS, INC.

SAMPLE LOG SHEET - "LOW FLOW" GROUNDWATER

Site Name: Site 08 Disposal Area Naval Station Newport, Newport, RI
Sample ID: DA-MW-0413-063010

Tetra Tech NUS Charge No. 112g02124 H.HS
QC: NA (If applicable)

Sample Method: MicroBladder low Flow
Depth Sampled: 30 Feet TOC Screened Interval Depth _____ feet
Sample Date & Time: 6/30/10 1140 hours NA /Dup
Sampler(s): M. Horton
Data Recorded By: M. Horton Signature: [signature]
Notes: _____

H&S Survey Meter _____ PPM
Pre-pump insertion WL 17.56 ft
TD 45.60
Field Instrument Group A/B/C/D
Post - pump insertion WL _____ ft

Analysis	Bottle Lot #	Analysis	Bottle Lot #	Analysis	Bottle Lot #
VOC					
1,4-Dioxane					

Clock Time 24hr	Water Depth below MP ft	Pump Dial 1	Purge Rate ml/min	Cumm. Volume Purged liters	Temp °C	Spec. Cond. 2 uS/cm	pH	ORP/Eh3 mv	DO mg/L	Turbidity NTU	Comments
1023	18.71	CPMC 7/3	45		16.71	366	6.86	-4.2	2.82	21.3	
1033	18.69				16.07	357	6.93	-4.8	1.97	27.9	
1043	18.69				15.78	354	6.94	-11.8	1.53	15.5	
1053	18.69			0.5	16.00	351	6.97	-9.1	1.37	11.5	
1103	18.69			↓	16.25	350	6.98	-9.4	1.18	11.1	
1113	18.69			↓	16.34	348	6.98	-8.3	1.17	7.86	
1123	18.69				16.66	348	7.00	-5.7	1.22	6.75	
1133	18.69		↓	0.75	16.74	345	7.00	-2.4	1.31	4.45	
End of Purge - Stabilization achieved in accordance with WP											

TtNUS Form 0009

1. Pump dial setting (for example: hertz, cycle/min, etc.)
2. Siemens per cm (same as umhos/cm) at 25 °C.
3. Oxidation reduction potential (stand in for Eh).

TETRA TECH NUS, INC.

SAMPLE LOG SHEET - "LOW FLOW" GROUNDWATER

Site Name: Site 08 Disposal Area Naval Station Newport, Newport, RI
Sample ID: OA-MW6A-062310

Tetra Tech NUS Charge No. 112g02124 HHS
QC: alone (If applicable)

Sample Method: Peristaltic Pump
Depth Sampled: 10.41 Feet Screened Interval Depth [redacted] NA feet
Sample Date & Time: 6/23/10 1238 hours NA /Dup
Sampler(s): Walt Payon
Data Recorded By: Walt Payon Signature: Walt Pe
Notes:

H&S Survey Meter 0.0 PPM Field Instrument Group A(B)C/D
Pre-pump insertion WL [redacted] 9.71 ft Post - pump insertion WL 11.40 ft

Analysis	Bottle Lot #	Analysis	Bottle Lot #	Analysis	Bottle Lot #
VOCs					

Clock Time 24hr	Water Depth below MP ft	Pump Dial 1	Purge Rate ml/min	Cumm. Volume Purged liters	Temp °C	Spec. Cond. 2 uS/cm	pH	ORP/Eh3 mv	DO mg/L	Turbidity NTU	Comments
1119	[redacted]9.71	—	—	—	—	—	—	—	—	—	Initial
1121	10.15	1000	300		18.71	161	6.34	-44.1	1.50	107.1	Cloudy
1126	10.40	0900	150		18.28	152	6.28	-38.2	1.14	80.3	Slightly
1131	10.55	0800	100		18.36	151	6.30	-27.1	0.93	53.7	
1136	10.75	0800	100		18.04	152	6.31	-25.5	0.77	55.8	
1141	10.90	0800	100		17.97	153	6.35	-22.8	0.69	53.4	
1146	11.15	0800	100		17.90	155	6.38	-19.2	0.65	55.1	
1151	11.30	0800	100		17.93	156	6.40	-19.0	0.67	70.0	
1156	Dry	0800	100	1.2 gallons	17.73	153	6.37	-43.0	0.65	111	Cloudy
			well went dry		1st	discharge	80%	before	Sampling.		

TtNUS Form 0009

1. Pump dial setting (for example: hertz, cycle/min, etc.)
2. Siemens per cm (same as umhos/cm) at 25 °C.
3. Oxidation reduction potential (stand in for Eh).

TETRA TECH NUS, INC.

SAMPLE LOG SHEET - "LOW FLOW" GROUNDWATER

Site Name: Site 08 Disposal Area Naval Station Newport, Newport, RI
Sample ID: DA-MW-6B-061710

Tetra Tech NUS Charge No. 112g02124 FLFS
QC: none (If applicable)

Sample Method: Bladder Pump
Depth Sampled: 30.40 Feet Screened Interval Depth 39.2 feet
Sample Date & Time: 6/17/10 17:05 hours NA /Dup
Sampler(s): Walt Pyron
Data Recorded By: Walt Pyron Signature: Walt Pyron
Notes:

H&S Survey Meter 0.0 PPM Field Instrument Group A/B/C/D
Pre-pump insertion WL 9.57 ft Post - pump insertion WL 9.57 ft

Analysis	Bottle Lot #	Analysis	Bottle Lot #	Analysis	Bottle Lot #
VOCs					

Clock Time 24hr	Water Depth below MP ft	Pump Dial 1	Purge Rate ml/min	Cumm. Volume Purged liters	Temp °C	Spec. Cond. 2 uS/cm	pH	ORP/Eh3 mv	DO mg/L	Turbidity NTU	Comments
1614	~~Sampler~~	—	—	—	—	—	—	—	—	—	Initial
1615	9.50		120		18.39	457	8.82	147.3	6.16	135	Cloudy
1620	9.70		↓		18.55	436	8.92	146.7	5.03	137	
1625	9.80		↓		18.42	432	9.05	146.4	6.97	139	
1630	9.95		100		19.59	431	9.05	146.1	7.27	149	
1635	10.05		↓		19.20	432	9.12	145.0	7.17	146	
1640	10.25		↓		19.04	431	9.18	145.7	8.64	144	
1645	10.40		↓		17.51	430	9.20	145.9	6.42	152	
1650	10.65		↓	↓	16.85	430	9.24	146.0	9.13	155	
1655	10.80		↓	↓	16.55	429	9.26	145.5	9.11	151	
1700	11.00	↓	↓	1.5 gallons	16.25	429	9.27	144.7	9.12	156	↓
~~1710~~											
~~1720~~	←	—	Well parameters		Stabilize	—	—	—	—	→	
~~1730~~	←	—	Sampling Begins			—	—	—	—	→	

TtNUS Form 0009

1. Pump dial setting (for example: hertz, cycle/min, etc.)
2. Siemens per cm (same as umhos/cm) at 25 °C.
3. Oxidation reduction potential (stand in for Eh).

TETRA TECH NUS, INC.

SAMPLE LOG SHEET - "LOW FLOW" GROUNDWATER

Site Name: Site 08 Disposal Area Naval Station Newport, Newport, RI
Sample ID: DA-MW78-062310

Tetra Tech NUS Charge No. 112g02124 H.H.S
QC: None (If applicable)

Sample Method: Peristaltic pump
Depth Sampled: 7.36 Feet Screened Interval Depth ~~5-15~~ NA feet
Sample Date & Time: 6/23/10 1553 hours NA /Dup
Sampler(s): Walt Payon
Data Recorded By: Walt Payon Signature: Walt Payon
Notes:

H&S Survey Meter 538 PPM Field Instrument Group A/B/C/D
Pre-pump insertion WL 5.76 ft Post - pump insertion WL 5.76 ft

Analysis	Bottle Lot #	Analysis	Bottle Lot #	Analysis	Bottle Lot #
VOCs		Cyanide		Ammonia	
TOC		1,4 Dioxane		PIN/NS	
MEE		PCDN		Sulfide	

Clock Time 24hr	Water Depth below MP ft	Pump Dial 1	Purge Rate ml/min	Cumm. Volume Purged liters	Temp °C	Spec. Cond. 2 uS/cm	pH	ORP/Eh3 mv	DO mg/L	Turbidity NTU	Comments
1500											
~~1503~~	5.76	—	—	—	—	—	—	—	—	—	Initial
1503	6.00	0900	200		23.64	349	5.81	661.0	1.80	23.7	Slightly
1508	6.30	0800	150		20.78	378	5.88	-6.6	1.14	13.0	
1513	6.45	0800	150		20.56	381	5.93	-22.0	1.06	13.2	
1518	6.45	0800	150		20.44	394	5.95	-27.3	0.99	13.3	
1523	6.50	0700	100		20.35	423	6.00	-37.8	0.91	7.56	Clean
1528	6.55	0700	100		20.13	440	6.04	-49.7	0.88	6.49	
1533	6.60	0700	100		20.11	445	6.05	-55.0	0.88	4.22	
1538	6.65	0700	100		19.98	445	6.05	-58.4	0.86	2.65	
1543	6.70	0700	100		19.62	444	6.06	-59.0	0.88	2.60	
1548	6.75	0700	100	2.0 gallons	19.56	443	6.06	-60.0	0.88	2.68	
			All parameters Stabilize								
			Sampling Begins								

TtNUS Form 0009

1. Pump dial setting (for example: hertz, cycle/min, etc.)
2. Siemens per cm (same as umhos/cm) at 25 °C.
3. Oxidation reduction potential (stand in for Eh).

TETRA TECH NUS, INC.

SAMPLE LOG SHEET - "LOW FLOW" GROUNDWATER

Site Name: Site 08 Disposal Area Naval Station Newport, Newport, RI
Sample ID: DA-MW7B-062210

Tetra Tech NUS Charge No. 112g02124 FI.FS
QC: _____ (If applicable)

Sample Method: BLADDER Pump
Depth Sampled: 23.7' Feet Screened Interval Depth _____ feet
Sample Date & Time: 6/22/10 11:10 hours _____ /Dup
Sampler(s): M. Alcoy
Data Recorded By: M. Alcoy Signature: M. Alcoy
Notes: _____

H&S Survey Meter 0.0 PPM Field Instrument Group A/B/C/D
Pre-pump insertion WL 6.31 ft Post - pump insertion WL 5.40 ft

Analysis	Bottle Lot #	Analysis	Bottle Lot #	Analysis	Bottle Lot #
VOC		Cyanide		Ferrous Iron	
1,4 Dioxane		Ammonia		P/N/N/S	
PGDN		M/E/E		Sulfide	
				TOC	

Clock Time 24hr	Water Depth below MP ft	Pump Dial 1	Purge Rate ml/min	Cumm. Volume Purged liters	Temp °C	Spec. Cond. 2 uS/cm	pH	ORP/Eh3 mv	DO mg/L	Turbidity NTU	Comments
10:00	5.40	4 c/m	100	0							
10:05	5.82	4 c/m	100	0.5 L	20.75	341	7.57	51.1	3.14	181	
10:10	6.07	4 c/m	100	1.0 L	18.28	283	7.62	-8.9	1.12	160	
10:15	6.12	4 c/m	100	1.5 L	18.27	253	7.67	-42.9	0.57	160	
10:20	6.30	4 c/m	100	2.0 L	17.43	226	7.74	-91.8	0.37	149	
10:25	6.35	4 c/m	100	2.5 L	16.93	215	7.77	-123.2	0.30	147	
10:30	6.41	4 c/m	100	3.0 L	17.09	215	7.77	-144.6	0.28	154	
10:35	6.45	4 c/m	100	3.5 L	16.93	224	7.74	-155.3	0.25	145	
10:40	6.47	4 c/m	100	4.0 L	17.11	229	7.71	-159.1	0.29	126	
10:45	6.47	4 c/m	100	4.5 L	17.57	235	7.69	-164.4	0.29	141	
10:50	6.49	4 c/m	100	5.0 L	17.92	243	7.67	-167.9	0.24	152	
10:55	6.47	4 c/m	100	5.5 L	17.96	246	7.66	-172.1	0.30	142	
11:00	6.47	4 c/m	100	6.0 L	17.86	247	7.66	-174.8	0.30	140	
11:05	6.47	4 c/m	100	6.5 L	17.83	247	7.65	-176.8	0.31	139	

TtNUS Form 0009 BEGAN SAMPLING @ 11:10

1. Pump dial setting (for example: hertz, cycle/min, etc.)
2. Siemens per cm (same as umhos/cm) at 25 °C.
3. Oxidation reduction potential (stand in for Eh).

TETRA TECH NUS, INC.

SAMPLE LOG SHEET - "LOW FLOW" GROUNDWATER

Site Name: Site 08 Disposal Area Naval Station Newport, Newport, RI
Sample ID: DA-MW08A-062910

Tetra Tech NUS Charge No. 112g02124 FI.FS
QC: None (If applicable)

Sample Method: Peristaltic Pump
Depth Sampled: 6.60 Feet Screened Interval Depth NA feet
Sample Date & Time: 6/29/10 1055 hours NA /Dup
Sampler(s): Walt Pryor
Data Recorded By: Walt Pryor Signature: Walt Pr
Notes:

H&S Survey Meter 0.0 PPM Field Instrument Group A/B/C/D
Pre-pump insertion WL 5.50 ft Post - pump insertion WL 5.60 ft

Analysis	Bottle Lot #	Analysis	Bottle Lot #	Analysis	Bottle Lot #
VOCs					

Clock Time 24hr	Water Depth below MP ft	Pump Dial 1	Purge Rate ml/min	Cumm. Volume Purged liters	Temp °C	Spec. Cond. 2 uS/cm	pH	ORP/Eh3 mv	DO mg/L	Turbidity NTU	Comments
0953	5.50	—	—	—	—	—	—	—	—	—	—
0955	6.30	~~200~~ 1100	~~1100~~ 200		19.58	381	6.30	6.3	2.02	99.4	Slighty
1000	6.40	0900	~~[illegible]~~	150	19.67	374	6.28	15.9	1.98	78.5	
1005	6.55	0800	120		19.29	371	6.23	24.0	1.53	35.2	
1010	6.65	0700	100		19.33	370	6.21	10.1	1.45	16.8	
1015	6.80	0700	100		19.25	370	6.18	-3.2	1.42	10.2	
1020	6.95	0700	100		19.32	371	6.16	-11.1	1.42	14.5	
1025	7.15	0700	100		19.20	371	6.11	-13.0	1.55	17.3	
1030	7.25	0700	100		19.62	371	6.11	-25.5	1.93	25.0	
1035	7.45	0700	100	1.0 gallons	20.63	370	6.20	-29.6	4.68	24.2	
1040				Dry let recharge 80%							

TtNUS Form 0009

1. Pump dial setting (for example: hertz, cycle/min, etc.)
2. Siemens per cm (same as umhos/cm) at 25 °C.
3. Oxidation reduction potential (stand in for Eh).

TETRA TECH NUS, INC.

SAMPLE LOG SHEET - "LOW FLOW" GROUNDWATER

Site Name: Site 08 Disposal Area Naval Station Newport, Newport, RI
Sample ID: DA-MW 8B - 062210

Tetra Tech NUS Charge No. 112g02124 H.HS
QC: None (If applicable)

Sample Method: Bladder pump
Depth Sampled: 12.05 Feet Screened Interval Depth [redacted] feet
Sample Date & Time: 6/22/10 1145 hours NA /Dup
Sampler(s): Walt Payon
Data Recorded By: Walt Payon Signature: [signature]
Notes:

H&S Survey Meter 0.0 PPM Field Instrument Group A/B/C/D
Pre-pump insertion WL 5.66 ft Post - pump insertion WL 5.66 ft

Analysis	Bottle Lot #	Analysis	Bottle Lot #	Analysis	Bottle Lot #
VOCs	40ml VOA				

Clock Time 24hr	Water Depth below MP ft	Pump Dial 1	Purge Rate ml/min	Cumm. Volume Purged liters	Temp °C	Spec. Cond. 2 uS/cm	pH	ORP/Eh3 mv	DO mg/L	Turbidity NTU	Comments
1008	5.66	—	—	—	—	—	—	—	—	—	—
1010	5.90		300		12.47	267	7.51	-180.0	5.60	181	Cloudy
1015	6.30		180		12.69	263	7.69	-238.6	3.26	194	
1020	6.25		100		14.57	262	7.73	-244.8	2.24	200	
1030	6.20		100		15.13	262	7.64	-230.6	1.20	184	
1040	6.20		100		15.25	283	7.39	-187.3	0.64	149	
1050	6.20		100		15.40	283	7.46	-208.2	0.47	132	
1100	6.20		100		15.29	281	7.45	-206.2	0.45	113	
1110	6.20		100		15.36	278	7.42	-202.3	0.43	97.9	Slightly
1120	6.20		100		15.06	276	7.39	-197.2	0.42	75.0	
1130	6.20		100		15.34	273	7.35	-191.2	0.42	66.0	
1135	6.20		100		15.34	272	7.33	-189.1	0.43	65.9	
1140	6.20		100	3.5 gallons	15.27	271	7.32	-188.0	0.43	66.2	

TtNUS Form 0009

1. Pump dial setting (for example: hertz, cycle/min, etc.)
2. Siemens per cm (same as umhos/cm) at 25 °C.
3. Oxidation reduction potential (stand in for Eh).

Well parameters Stabilized
Sampling Begins

TETRA TECH NUS, INC.

SAMPLE LOG SHEET - "LOW FLOW" GROUNDWATER

Site Name: Site 08 Disposal Area Naval Station Newport, Newport, RI
Sample ID: DA-MW09B-062910

Tetra Tech NUS Charge No. 112g02124 HHS
QC: Lab QC (If applicable)

Sample Method: Low Flow Bladder
Depth Sampled: 18' Feet; FT Screened Interval Depth _____ feet
Sample Date & Time: 6/29/10 1210 hours NA /Dup
Sampler(s): M. Horton
Data Recorded By: M. Horton Signature: MH
Notes: _____

H&S Survey Meter 0.0 PPM Field Instrument Group A/B/C/D
Pre-pump insertion WL 7.57 ft TOR Post - pump insertion WL 7.35 ft
TD: ~~13.5~~ 26.25

Analysis	Bottle Lot #	Analysis	Bottle Lot #	Analysis	Bottle Lot #

Clock Time 24hr	Water Depth below MP ft	Pump Dial 1	Purge Rate ml/min	Cumm. Volume Purged liters gal	Temp °C	Spec. Cond. 2 uS/cm	pH	ORP/Eh3 mv	DO mg/L	Turbidity NTU	Comments
1005	7.85	CPM4 13.5/15	120		16.93	643	7.31	-243.1	2.45	71.4	
1615	8.47	14/1	110		17.79	634	7.43	-306.7	1.14	79.1	
1025	8.77				20.43	624	7.37	-300.3	0.94	73.4	
1035	9.10				21.06	616	7.36	-298.1	0.84	42.8	
1045	9.42				20.58	606	7.35	-297.8	0.75	32.4	
1050	9.59				20.11	601	7.35	-300.2	0.51	29.1	
1055	~~9~~9.76				20.06	598	7.35	-294.0	0.58	28.3	
1100	9.99			1.5	20.05	592	7.35	-296.0	0.56	28.4	
1110	10.36		80		20.46	583	7.31	-297.1	0.46	26.5	
1115	10.55				20.38	579	7.34	-298.3	0.49	21.4	
1120	10.69				19.97	575	7.33	-296.9	1.07	19.9	
1125	10.80				20.98	571	7.31	-292.2	1.08	19.9	
1130	10.94				21.33	569	7.28	-291.9	1.11	18.6	
1135	11.06				21.44	564	7.27	-290.1	1.41	19.6	

TtNUS Form 0009

1. Pump dial setting (for example: hertz, cycle/min, etc.)
2. Siemens per cm (same as umhos/cm) at 25 °C.
3. Oxidation reduction potential (stand in for Eh).

TETRA TECH NUS, INC.

SAMPLE LOG SHEET - "LOW FLOW" GROUNDWATER

Site Name: _____
Sample ID: MW09B

Tetra Tech NUS Charge No. _____
QC: _____ (If applicable)

Clock Time 24hr	Water Depth below MP ft	Pump Dial 1	Purge Rate ml/min	Cumm. Volume Purged liters	Temp °C	Spec. Cond. 2 uS/cm	pH	ORP/Eh3 mv	DO mg/L	Turbidity NTU	Comments
1140	11.22			2.6	22.02	574	7.27	-300.0	0.65	21.6	
1145	11.30				22.45	631	7.26	-297.4	0.73	22.2	
1150	11.44				22.28	626	7.27	-302.8	0.71	18.9	
1155	11.57				21.88	619	7.27	-302.7	0.71	17.9	
1200	11.72		SD	3	22.14	614	7.26	-304.2	0.75	17.7	
End of Purge 2HR Limit											

TtNUS Form 0009

1. Pump dial setting (for example: hertz, cycle/min, etc.)
2. Siemens per cm (same as umhos/cm) at 25 °C.
3. Oxidation reduction potential (stand in for Eh).

TETRA TECH NUS, INC.

SAMPLE LOG SHEET - "LOW FLOW" GROUNDWATER

Site Name: Site 08 Disposal Area Naval Station Newport, Newport, RI
Sample ID: DA-MW11-062910

Tetra Tech NUS Charge No. 112g02124 HHS
QC: DA-MWDup02-062910 (If applicable)

Sample Method: Peristaltic pump
Depth Sampled: 10.9 Feet Screened Interval Depth NA feet
Sample Date & Time: 6/29/10 1420 hours 02 /Dup
Sampler(s): Walt Pryor
Data Recorded By: Walt Pryor Signature: Walt R
Notes:

H&S Survey Meter 0.0 PPM Field Instrument Group (A)/B/C/D
Pre-pump insertion WL 9.00 ft Post - pump insertion WL 9.00 ft

Analysis	Bottle Lot #	Analysis	Bottle Lot #	Analysis	Bottle Lot #
VOCs		1,4 Dioxane		Cyanide	
MEE		PCDN		Ammonia	
TOC		Sulfide		Ferrous Iron	

Clock Time 24hr	Water Depth below MP ft	Pump Dial 1	Purge Rate ml/min	Cumm. Volume Purged liters	Temp °C	Spec. Cond. 2 uS/cm	pH	ORP/Eh3 mv	DO mg/L	Turbidity NTU	Comments
1158	9.00	—	—	—	—	—	—	—	—	—	Initial
1200	9.70	1200	200		17.46	585	5.78	-12.3	1.36	52.8	Slightly
1205	9.90	0700	100		17.96	585	5.76	-9.7	1.04	39.5	
1210	10.09	0700	100		18.63	586	5.75	-4.0	1.10	44.4	
1215	10.45	0700	100		18.46	596	5.74	2.0	1.38	35.3	
1220	10.65	0700	100		18.16	610	5.76	-2.6	1.75	18.3	
1225	10.75	0700	100		18.00	611	5.81	-5.5	1.92	15.6	
1230	10.85	0700	100		17.97	606	5.85	-2.9	1.83	11.4	
1235	10.95	0700	100		17.94	600	5.89	0.2	1.60	8.14	Clean
1240	11.05	0700	100		18.05	594	5.92	3.1	1.44	8.58	
1245	11.20	0700	100		17.86	591	5.96	5.9	1.29	9.04	
1250	11.30	0700	100		17.95	590	5.99	9.2	1.16	7.70	
1255	11.40	0700	100		18.22	587	6.00	14.5	1.08	6.56	
1300	11.50	0700	100		18.23	589	6.02	18.7	1.05	6.03	

TtNUS Form 0009

1. Pump dial setting (for example: hertz, cycle/min, etc.)
2. Siemens per cm (same as umhos/cm) at 25 °C.
3. Oxidation reduction potential (stand in for Eh).

TETRA TECH NUS, INC.

SAMPLE LOG SHEET - "LOW FLOW" GROUNDWATER

Site Name: Site 08 Disposal Area Naval Station
Sample ID: DA-MW11-062910

Tetra Tech NUS Charge No. 112G02124 - F1.FS
QC: DA-~~[illegible]~~ 062910 Dup02 (If applicable)

Clock Time 24hr	Water Depth below MP ft	Pump Dial 1	Purge Rate ml/min	Cumm. Volume Purged liters	Temp °C	Spec. Cond. 2 uS/cm	pH	ORP/Eh3 mv	DO mg/L	Turbidity NTU	Comments
1305	11.65	—	100	—	18.54	587	6.03	24.5	1.02	7.91	Clean
1310	11.85		100		18.83	588	6.06	34.4	1.01	10.81	
1315	~~[illegible]~~ 11.95		100		18.73	590	6.06	34.0	1.01	7.25	
1320	12.05		100	[illegible]	18.51	589	6.06	36.9	1.10	12.70	
1325	12.35		100		19.68	587	6.12	34.2	1.83	11.60	
1330				Dry let	Recharge	80 %					

TtNUS Form 0009

1. Pump dial setting (for example: hertz, cycle/min, etc.)
2. Siemens per cm (same as umhos/cm) at 25 °C.
3. Oxidation reduction potential (stand in for Eh).

TETRA TECH NUS, INC.

SAMPLE LOG SHEET - "LOW FLOW" GROUNDWATER

Site Name: Site 08 Disposal Area Naval Station Newport, Newport, RI
Sample ID: DA-MW12 - 063010

Tetra Tech NUS Charge No. 112g02124 H.H.S
QC: None (If applicable)

Sample Method: Peristaltic pump
Depth Sampled: 5.20 Feet Screened Interval Depth NA feet
Sample Date & Time: 6/30/10 1405 hours NA /Dup
Sampler(s): Walt Payon
Data Recorded By: Walt Payon Signature: Walt
Notes:

H&S Survey Meter 0.0 PPM Field Instrument Group (A)/B/C/D
Pre-pump insertion WL 3.80 ft Post - pump insertion WL 3.80 ft

Analysis	Bottle Lot #	Analysis	Bottle Lot #	Analysis	Bottle Lot #
VOCs		Sulfide		1,4 Dioxane	
MEE		Ammonia		PCBs	
TOC		Cyanide		Pb/Mn/Fe	
				Ferrous Iron	

Clock Time 24hr	Water Depth below MP ft	Pump Dial 1	Purge Rate ml/min	Cumm. Volume Purged liters	Temp °C	Spec. Cond. 2 uS/cm	pH	ORP/Eh3 mv	DO mg/L	Turbidity NTU	Comments
1308	3.80	—	—	—	—	—	—	—	—	—	Initial
1310	3.95	1000	150		21.44	244	5.49	5.5	1.72	93.2	Slightly
1315	3.95	1000	150		21.01	234	5.40	19.4	1.37	56.3	↓
1320	3.95	1000	150		20.38	230	5.41	34.4	1.23	21.1	↓
1325	3.95	1000	150		20.09	228	5.42	53.7	1.18	10.8	Clear
1330	3.95	1000	150		20.00	228	5.43	68.3	1.19	5.52	↓
1335	3.95	1000	150		19.83	228	5.43	81.5	1.20	4.26	↓
1340	3.95	1000	150		19.68	227	5.43	92.7	1.16	2.94	↓
1345	3.95	1000	150		19.65	227	5.45	98.8	1.16	1.76	↓
1350	3.95	1000	150		19.68	227	5.45	105.8	1.17	1.67	↓
1355	3.95	1000	150	↓	19.68	227	5.45	111.5	1.16	1.58	↓
1400	3.95	1000	150	2.0 gallons	19.72	227	5.46	113.0	1.18	1.62	↓

TtNUS Form 0009

H&V Parameters Stable, Ice Sampling Begins

1. Pump dial setting (for example: hertz, cycle/min, etc.)
2. Siemens per cm (same as umhos/cm) at 25 °C.
3. Oxidation reduction potential (stand in for Eh).

TETRA TECH NUS, INC.

SAMPLE LOG SHEET - "LOW FLOW" GROUNDWATER

Site Name: Site 08 Disposal Area Naval Station Newport, Newport, RI
Sample ID: DA-MW-~~03~~13-063010

Tetra Tech NUS Charge No. 112g02124 HHS
QC: NA (If applicable)

Sample Method: Low Flow Bladder
Depth Sampled: 18 Feet Screened Interval Depth _____ feet
Sample Date & Time: 6/30/10 1555 hours NA /Dup
Sampler(s): M. Horton
Data Recorded By: M. Horton Signature: [signature]
Notes: _____

H&S Survey Meter 0.0 PPM Field Instrument Group A/B/C/D
Pre-pump insertion WL 4.06 ft TOC Post - pump insertion WL _____ ft
TD - 24.71 TOC

Analysis	Bottle Lot #	Analysis	Bottle Lot #	Analysis	Bottle Lot #

Clock Time 24hr	Water Depth below MP ft	Pump Dial 1	Purge Rate ml/min	Cumm. Volume Purged ~~liters~~ gal	Temp °C	Spec. Cond. 2 uS/cm	pH	ORP/Eh3 mv	DO mg/L	Turbidity NTU	Comments
1348	4.20	CP44	140		15.41	227	9.42	-35.1	4.21	Off Scale	
1358	4.22	13.5/11.5			14.28	215	9.41	7.7	1.17	1593	
1408	4.26				14.00	227	9.25	25.0	0.51	766	
1418	4.29			1.5	13.96	242	9.08	31.8	0.35	628	
1428	4.30				13.91	257	8.92	33.4	0.30	630	
1438	4.31			2	13.85	272	8.76	32.3	0.24	144	
1448	4.33				13.79	285	8.60	21.7	0.37	142	
1458	4.34			2.5	13.72	297	8.44	-7.1	0.33	154	
1503	4.35				13.68	302	8.36	-42.1	0.56	151	
1508	4.35			3	13.71	307	8.28	-88.1	0.33	147	
1513	4.35				13.71	311	8.21	-138.9	0.49	136	
1518	4.35			4	13.61	335	8.12	-187.2	0.35	118	
1523	4.35				13.58	319	8.05	-203.6	0.44	113	
1528	4.35				13.64	321	7.99	-213.8	0.34	91.5	

TtNUS Form 0009

1. Pump dial setting (for example: hertz, cycle/min, etc.)
2. Siemens per cm (same as umhos/cm) at 25 °C.
3. Oxidation reduction potential (stand in for Eh).

TETRA TECH NUS, INC.

SAMPLE LOG SHEET - "LOW FLOW" GROUNDWATER

Site Name: _____
Sample ID: MW 13B

Tetra Tech NUS Charge No. _____
QC: _____ (If applicable)

Clock Time 24hr	Water Depth below MP ft	Pump Dial 1	Purge Rate ml/min	Cumm. Volume Purged ~~liters~~ gal	Temp °C	Spec. Cond. 2 uS/cm	pH	ORP/Eh3 mv	DO mg/L	Turbidity NTU	Comments
~~1527~~ 1533	4.35		~~4.5~~	4.5	13.59	326	7.92	-215.1	0.37	83.1	
1538	4.36				13.58	327	7.87	-215.9	0.37	80.2	
1543	4.35				13.55	329	7.84	-215.2	0.45	72.2	
1548	4.35		140	5	13.38	331	7.81	-214.3	0.24	65.4	

TtNUS Form 0009

1. Pump dial setting (for example: hertz, cycle/min, etc.)
2. Siemens per cm (same as umhos/cm) at 25 °C.
3. Oxidation reduction potential (stand in for Eh).

TETRA TECH NUS, INC.

SAMPLE LOG SHEET - "LOW FLOW" GROUNDWATER

Site Name: Site 08 Disposal Area Naval Station Newport, Newport, RI
Sample ID: DA-MW101B-062310

Tetra Tech NUS Charge No. 112g02124 H.HS
QC: _____ (If applicable)

Sample Method: BLADDER PUMP
Depth Sampled: 45' Feet Screened Interval Depth N/A feet
Sample Date & Time: 6/23/10 16:10 hours _____/Dup
Sampler(s): M. Alroy
Data Recorded By: M. Alroy Signature: M. Alroy
Notes: _____

H&S Survey Meter 0.0 PPM Field Instrument Group (A)/B/C/D
Pre-pump insertion WL 10.51 ft Post - pump insertion WL 10.32 ft

Analysis	Bottle Lot #	Analysis	Bottle Lot #	Analysis	Bottle Lot #
VOC		NNE6		SULFIDE	
1,4 DIOXANE		PGDM		SULFATE	
MEE		TOC			

Clock Time 24hr	Water Depth below MP ft	Pump Dial 1	Purge Rate ml/min	Cumm. Volume Purged liters	Temp °C	Spec. Cond. 2 uS/cm	pH	ORP/Eh3 mv	DO mg/L	Turbidity NTU	Comments
15:00	10.32	4 clm	100								
15:05	10.51	↓	~~4 clm~~ MA 6/23/10	0.5 L	20.74	643	7.38	74.8	6.69	26.1	
15:10	10.61			1.0 L	19.98	645	7.37	90.6	6.06	27.5	
15:15	10.91			1.5	18.69	622	7.31	101.1	4.08	43.3	
15:20	11.10			2.0	17.47	603	7.28	111.1	2.82	51.6	
15:25	11.32			2.5	17.13	596	7.27	109.8	2.03	54.4	
15:30	11.45			3.0	18.62	615	7.29	110.9	1.90	47.9	
15:35	11.61			3.5	19.23	622	7.31	105.8	1.64	49.2	
15:40	11.73			4.0	19.59	624	7.31	100.6	1.47	47.0	
15:45	11.9			4.5	19.32	618	7.31	97.2	1.32	54.8	
15:50	12.01			5.0	19.13	613	7.31	87.4	0.85	39.5	
15:55	12.11		↓	5.5	19.11	612	7.32	79.1	1.18	48.2	
16:00	12.26	↓		6.0	18.93	607	7.32	72.7	1.12	46.9	
16:05	12.35			6.5	19.09	605	7.33	69.1	1.09	48.6	

TtNUS Form 0009

BEGAN SAMPLING @ 16:10

1. Pump dial setting (for example: hertz, cycle/min, etc.)
2. Siemens per cm (same as umhos/cm) at 25 °C.
3. Oxidation reduction potential (stand in for Eh).

TETRA TECH NUS, INC.

SAMPLE LOG SHEET - "LOW FLOW" GROUNDWATER

Site Name: Site 08 Disposal Area Naval Station Newport, Newport, RI
Sample ID: 08-MW103B-080110

Tetra Tech NUS Charge No. 112g02124 HHS
QC: None (If applicable)

Sample Method: Bladder pump
Depth Sampled: 34.9 Feet Screened Interval Depth NA feet
Sample Date & Time: 7/1/10 1100 hours NA /Dup
Sampler(s): Walt Payson
Data Recorded By: Walt Payson Signature: Walt Payson
Notes:

H&S Survey Meter 0.0 PPM Field Instrument Group A/B/C/D
Pre-pump insertion WL 16.80 ft Post - pump insertion WL _____ ft

Analysis	Bottle Lot #	Analysis	Bottle Lot #	Analysis	Bottle Lot #
VOCs		Sulfide		1,4 Dioxane	Cyanide
MEE		Ammonia		TOC	
TOC		Ferrous Iron		PI/NP	

Clock Time 24hr	Water Depth below MP ft	Pump Dial 1	Purge Rate ml/min	Cumm. Volume Purged liters	Temp °C	Spec. Cond. 2 uS/cm	pH	ORP/Eh3 mv	DO mg/L	Turbidity NTU	Comments
0853	16.80	—	—	—	~~12.62~~	~~459~~	~~6.56~~	~~-86.4~~	~~3.37~~	~~283~~	Cloudy
0855	16.85		300		12.62	459	6.56	-86.4	3.37	283	
0900	17.35		250		12.08	457	6.83	-166.4	1.07	287	
0905	17.60		190		12.22	457	6.91	-181.9	0.84	297	
0910	17.65		100		12.68	456	6.94	-188.2	0.87	283	
0915	17.65		100		12.77	456	6.95	-192.1	0.83	279	
0925	17.75		100		12.80	456	6.96	-196.2	0.86	256	
0935	17.75		100		12.74	456	6.97	-199.5	0.64	246	
0945	17.80		100		12.67	457	6.98	-201.5	0.60	238	
0955	17.85		100		12.57	456	6.99	-202.6	0.54	237	
1000	17.85		100		12.57	456	6.99	-203.0	0.54	230	
1005	17.85		100		12.58	456	6.99	-203.5	0.53	217	
1015	17.85		100		12.45	455	6.98	-204.1	0.48	217	
1020	17.85	↓	100	↓	12.46	454	6.99	-204.4	0.48	208	↓

TtNUS Form 0009

1. Pump dial setting (for example: hertz, cycle/min, etc.)
2. Siemens per cm (same as umhos/cm) at 25 °C.
3. Oxidation reduction potential (stand in for Eh).

TETRA TECH NUS, INC.

SAMPLE LOG SHEET - "LOW FLOW" GROUNDWATER

Site Name: Site 08 Disposal Area Naval Station
Sample ID: DA-MW103B-070110

Tetra Tech NUS Charge No. 112G02124 - F1.FS
QC: None (If applicable)

Clock Time 24hr	Water Depth below MP ft	Pump Dial 1	Purge Rate ml/min	Cumm. Volume Purged liters	Temp °C	Spec. Cond. 2 uS/cm	pH	ORP/Eh3 mv	DO mg/L	Turbidity NTU	Comments
1030	17.85	—	100	—	12.49	454	6.99	-204.1	0.47	175	Cloudy
1040	17.90		↓		12.40	453	6.98	-203.4	0.46	166	↓
1045	17.95				12.45	452	6.97	-203.5	0.48	161	
1050	↓				12.40	452	6.97	-203.2	0.49	153	
1055	↓		↓	5.0 gallons	12.38	452	6.97	-202.9	0.48	147	↓
	←					Sampling	Begins		→		

TtNUS Form 0009

1. Pump dial setting (for example: hertz, cycle/min, etc.)
2. Siemens per cm (same as umhos/cm) at 25 °C.
3. Oxidation reduction potential (stand in for Eh).

TETRA TECH NUS, INC.

SAMPLE LOG SHEET - "LOW FLOW" GROUNDWATER

Site Name: Site 08 Disposal Area Naval Station Newport, Newport, RI
Sample ID: MW104B

Tetra Tech NUS Charge No. 112g02124 H.H.S
QC: None (If applicable)

Sample Method: Bladder pump
Depth Sampled: 32.5 Feet Screened Interval Depth 43.57 feet
Sample Date & Time: 6/18/10 1327 hours NA /Dup
Sampler(s): Walt Payson
Data Recorded By: Walt Payson Signature: Walt Payson
Notes:

H&S Survey Meter 0.0 PPM Field Instrument Group A/B/C/D
Pre-pump insertion WL 14.42 ft Post - pump insertion WL 14.42 ft

Analysis	Bottle Lot #	Analysis	Bottle Lot #	Analysis	Bottle Lot #
VOCs	40ml VOA	1,4 Dioxane	1L Amber	PCDD	1L Ambers

Clock Time 24hr	Water Depth below MP ft	Pump Dial 1	Purge Rate ml/min	Cumm. Volume Purged liters	Temp °C	Spec. Cond. 2 uS/cm	pH	ORP/Eh3 mv	DO mg/L	Turbidity NTU	Comments
1126	14.42	—	—	—	—	—	—	—	—	—	Initial
1127	14.50		300		14.24	373	6.64	524.0	6.84	309	Cloudy
1132	14.75		200		14.52	368	6.58	19.6	6.15	320	
1137	14.85		150		14.60	368	6.61	13.5	2.80	309	
1142	15.00				14.29	366	6.61	8.0	1.77	296	
1147	15.10				14.12	365	6.63	2.6	1.53	252	
1152	15.15				14.64	364	6.66	-4.2	1.38	221	
1157	15.20				14.73	363	6.68	-10.7	1.27	199	
1202	15.25				14.73	362	6.70	-18.4	1.17	170	
1207	15.30				14.78	361	6.71	-22.8	1.09	145	
1212	15.35				14.76	360	6.72	-8.3	1.06	128	
1222	15.40				14.91	357	6.74	-29.6	0.94	102	
1232	15.43				14.90	354	6.75	-29.6	0.84	86.3	Slightly
1242	15.46	↓	↓		14.96	352	6.76	-27.3	0.84	78.7	↓

TtNUS Form 0009

1. Pump dial setting (for example: hertz, cycle/min, etc.)
2. Siemens per cm (same as umhos/cm) at 25 °C.
3. Oxidation reduction potential (stand in for Eh).

TETRA TECH NUS, INC.

SAMPLE LOG SHEET - "LOW FLOW" GROUNDWATER

Site Name: Site 08 Disposal Area Naval Station Newport RI
Sample ID: MW 104 B
Tetra Tech NUS Charge No. 112G02124 - F1.F5
QC: None (If applicable)

Clock Time 24hr	Water Depth below MP ft	Pump Dial 1	Purge Rate ml/min	Cumm. Volume Purged liters	Temp °C	Spec. Cond. 2 uS/cm	pH	ORP/Eh3 mv	DO mg/L	Turbidity NTU	Comments
1252	15.49	—	150		15.06	349	6.76	-26.0	0.80	69.6	Slight
1302	15.50	↓	↓	↓	14.89	347	6.76	-32.8	0.72	64.9	↓
1307	15.50				14.76	345	6.76	-34.4	0.73	64.4	
1312	15.50				14.73	345	6.76	-35.7	0.72	51.7	
1317	15.50			↓	14.89	344	6.77	-35.6	0.70	52.0	
1322	15.50	↓	↓	3.5 gallons	14.92	344	6.77	-34.9	0.71	52.7	↓
		←	full parameters Stabilize								
		←	Sampling Begins								

TtNUS Form 0009

1. Pump dial setting (for example: hertz, cycle/min, etc.)
2. Siemens per cm (same as umhos/cm) at 25 °C.
3. Oxidation reduction potential (stand in for Eh).

TETRA TECH NUS, INC.

SAMPLE LOG SHEET - "LOW FLOW" GROUNDWATER

Site Name: Site 08 Disposal Area Naval Station Newport, Newport, RI
Sample ID: DA-MW-105B-0610

Tetra Tech NUS Charge No. 112g02124 FI.FS
QC: NA (If applicable)

Sample Method: Bladder Pump Low Flow
Depth Sampled: 35 Feet TOR Screened Interval Depth ~~1145~~ feet
Sample Date & Time: 6/28/10 1145 hours NA /Dup
Sampler(s): M. Horton
Data Recorded By: M. Horton Signature: [signature]
Notes:

H&S Survey Meter 0.0 PPM
Pre-pump insertion WL 18.05 ft
TD 50.51

Field Instrument Group A/B/C/D
Post - pump insertion WL _____ ft

Analysis	Bottle Lot #	Analysis	Bottle Lot #	Analysis	Bottle Lot #
VOC	TOC	Nitrate	Nitrite	Phosphate	
methane	14 Dioxane	Sulfate			
ethane	ammonia	Sulfide	PGDN		
ethene					

Clock Time 24hr	Water Depth below MP ft	Pump Dial 1	Purge Rate ml/min	Cumm. Volume Purged ~~liters~~ Gal	Temp °C	Spec. Cond. 2 uS/cm	pH	ORP/Eh3 mv	DO mg/L	Turbidity NTU	Comments
1000	Begin Purge	CPM 4 12:3	160		~~15.88~~	~~367~~	~~6.75~~	~~-51.6~~	~~1.59~~	~~69.7~~	
1012	18.34				15.88 ~~14.59~~	~~362~~ 367	6.75	-51.6	1.59	69.7	
1022	18.34				14.59	362	6.74	-46.4	2.03	34.7	
1032	18.36				15.47	357	6.75	-47.3	1.62	57.6	
1037	18.36			1.5	14.35	357	6.75	-47.1	1.42	33.8	
1042	18.36				14.10	353	6.74	-42.9	1.10	16.0	
1047	18.37			2	14.16	351	6.74	-41.4	0.98	18.6	
1052	18.38				14.11	350	6.73	-39.9	0.91	16.1	
1057	18.38				14.17	347	6.72	-38.3	0.83	11.0	
1102	18.38			~~3~~ 2.5	14.16	346	6.70	-35.2	0.88	11.4	
1107	18.39				14.16	343	6.68	-33.7	0.82	10.79	
1112	18.39				14.02	342	6.67	-30.2	0.75	11.5	
1117	18.39			3	14.12	340	6.65	-26.4	0.70	8.42	
1122	18.42				13.98	337	6.64	-21.2	0.68	8.24	

TtNUS Form 0009

1. Pump dial setting (for example: hertz, cycle/min, etc.)
2. Siemens per cm (same as umhos/cm) at 25 °C.
3. Oxidation reduction potential (stand in for Eh).

TETRA TECH NUS, INC.

SAMPLE LOG SHEET - "LOW FLOW" GROUNDWATER

Site Name: _____
Sample ID: MW105B

Tetra Tech NUS Charge No. _____
QC: _____ (If applicable)

Clock Time 24hr	Water Depth below MP ft	Pump Dial 1	Purge Rate ml/min	Cumm. Volume Purged ~~liters~~ gal	Temp °C	Spec. Cond. 2 uS/cm	pH	ORP/Eh3 mv	DO mg/L	Turbidity NTU	Comments
1127	18.45		160	4	14.01	336	6.62	-17.6	0.64	10.28	
1132	18.45		160		13.90	337	6.60	-14.4	0.61	9.37	
END PURGE											

TtNUS Form 0009

1. Pump dial setting (for example: hertz, cycle/min, etc.)
2. Siemens per cm (same as umhos/cm) at 25 °C.
3. Oxidation reduction potential (stand in for Eh).

TETRA TECH NUS, INC.

SAMPLE LOG SHEET - "LOW FLOW" GROUNDWATER

Site Name: Site 08 Disposal Area Naval Station Newport, Newport, RI
Sample ID: DA-GW-MW116-D1-0810

Tetra Tech NUS Charge No. 112g02124 HHS
QC: NA (If applicable)

Sample Method: Low Flow Bladder Pump
Depth Sampled: 5' Above bottom feet Screened Interval Depth _____ feet
Sample Date & Time: 8/6/10 1030 hours NA /Dup
Sampler(s): M. Horton
Data Recorded By: M. Horton Signature: [signature]
Notes: _____

H&S Survey Meter 0.0 PPM Field Instrument Group A/B/C/D
Pre-pump insertion WL 9.30 ft Post - pump insertion WL _____ ft

Analysis	Bottle Lot #	Analysis	Bottle Lot #	Analysis	Bottle Lot #
VOCs					

Clock Time 24hr	Water Depth below MP ft	Pump Dial 1	Purge Rate ml/min	Cumm. Volume Purged ~~liters~~ Gal	Temp °C	Spec. Cond. 2 uS/cm	pH	ORP/Eh3 mv	DO mg/L	Turbidity NTU	Comments
0855	9.42		85		18.73	252	6.58	-38.6	2.90	9.17	
0900	9.45				18.39	241	6.38	-36.6	1.37	12.2	
0905	9.46				17.97	236	6.30	-33.5	0.92	15.2	
0910	9.48				18.07	229	6.23	-29.3	0.75	10.78	
0915	9.47			0.5	18.04	226	6.16	-19.1	0.64	7.38	
0920	9.47				17.86	223	6.13	-17.5	0.62	6.30	
0925	9.49				17.79	220	6.12	-15.9	0.75	7.77	
0930	9.51				17.82	218	6.10	-14.3	0.64	6.57	
0935	9.51				18.06	217	6.08	-12.9	0.62	6.98	
0940	9.50			1.0	18.14	217	6.06	-10.1	0.61	7.24	
0945	9.50				18.17	216	6.04	-7.5	0.62	7.96	
0950	9.51				17.96	216	6.02	-8.3	0.64	6.39	
0955	9.50				17.71	218	6.01	-7.8	0.65	5.84	
~~0960~~ 1000	9.49				17.63	217	6.00	-8.0	0.65	5.30	

TtNUS Form 0009

1. Pump dial setting (for example: hertz, cycle/min, etc.)
2. Siemens per cm (same as umhos/cm) at 25 °C.
3. Oxidation reduction potential (stand in for Eh).

TETRA TECH NUS, INC.

SAMPLE LOG SHEET - "LOW FLOW" GROUNDWATER

Site Name: NUSC Disposal Area
Sample ID: DA-MW116-D1-0810

Tetra Tech NUS Charge No. _____
QC: _____ (If applicable)

Clock Time 24hr	Water Depth below MP ft	Pump Dial 1	Purge Rate ml/min	Cumm. Volume Purged ~~liters~~ gal	Temp °C	Spec. Cond. 2 uS/cm	pH	ORP/Eh3 mv	DO mg/L	Turbidity NTU	Comments
1005	9.50		85	1.5	17.77	217	6.00	-6.5	0.65	10.10	
1010	9.51		↓		17.64	218	5.99	-3.8	0.65	5.15	
1015	9.50				17.52	220	5.98	-4.4	0.98	5.86	
1020	9.50				17.55	219	5.99	-5.3	1.03	4.99	
1025	9.51		↓	2	17.40	218	5.98	-3.5	1.03	4.64	
END PURGE											

TtNUS Form 0009

1. Pump dial setting (for example: hertz, cycle/min, etc.)
2. Siemens per cm (same as umhos/cm) at 25 °C.
3. Oxidation reduction potential (stand in for Eh).

TETRA TECH NUS, INC.

SAMPLE LOG SHEET - "LOW FLOW" GROUNDWATER

Site Name: Site 08 Disposal Area Naval Station Newport, Newport, RI
Sample ID: MW116B-02

Tetra Tech NUS Charge No. 112g02124 H.H.S
QC: None (If applicable)

Sample Method: Peristaltic pump
Depth Sampled: _____ Feet Screened Interval Depth _____ feet
Sample Date & Time: 8/6/10 0946 hours NA /Dup
Sampler(s): Walt Payon
Data Recorded By: Walt Payon Signature: [signature]
Notes: _____

H&S Survey Meter 0.0 PPM Field Instrument Group (A)B/C/D
Pre-pump insertion WL 9.65 ft Post - pump insertion WL 9.65 ft

Analysis	Bottle Lot #	Analysis	Bottle Lot #	Analysis	Bottle Lot #
VOCs					

Clock Time 24hr	Water Depth below MP ft	Pump Dial 1	Purge Rate ml/min	Cumm. Volume Purged liters	Temp °C	Spec. Cond. 2 uS/cm	pH	ORP/Eh3 mv	DO mg/L	Turbidity NTU	Comments
0849	9.65	—	—	—	—	—	—	—	—	—	Initial
0851	9.70	1200	150		16.68	240	8.05	-33.2	1.88	12.7	Slightly
0856	9.70	1200	150		16.82	235	7.11	-26.6	1.44	5.18	Clear
0901	9.70	1200	150		16.22	234	6.81	-27.7	1.16	3.50	
0906	9.70	1200	150		15.99	233	6.66	-28.3	0.57	1.55	
0911	9.70	1200	150		15.84	231	6.66	-27.5	0.42	1.78	
0916	9.80	1200	150		15.62	230	6.50	-26.5	0.35	1.68	
0921	9.80	1200	150		15.93	229	6.51	-26.0	0.34	0.69	
0926	9.80	1200	150		15.65	229	6.69	-25.2	0.33	0.69	
0931	9.80	1200	150		15.67	229	6.40	-22.9	0.32	0.16	
0936	9.80	1200	150		15.66	228	6.41	-20.9	0.30	0.16	
0941	9.80	1200	150	2.5 gallons	15.71	228	6.41	-20.7	0.30	0.15	

TtNUS Form 0009

1. Pump dial setting (for example: hertz, cycle/min, etc.)
2. Siemens per cm (same as umhos/cm) at 25 °C.
3. Oxidation reduction potential (stand in for Eh).

Well parameters Stabilize
Sampling Begins

TETRA TECH NUS, INC.

SAMPLE LOG SHEET - "LOW FLOW" GROUNDWATER

Site Name: Site 08 Disposal Area Naval Station Newport, Newport, RI
Sample ID: DA-MW 117B-D1

Tetra Tech NUS Charge No. 112g02124 FI.FS
QC: None (If applicable)

Sample Method: Bladder pump
Depth Sampled: 34.0 Feet Screened Interval Depth NA feet
Sample Date & Time: 8/11/10 1035 hours NA /Dup
Sampler(s): Walt Payon
Data Recorded By: Walt Payon Signature: Walt
Notes: Ferrous Iron Reading 0.16

H&S Survey Meter 0.0 PPM Field Instrument Group A/B/C/D
Pre-pump insertion WL 22.80 ft Post - pump insertion WL 23.00 ft

Analysis	Bottle Lot #	Analysis	Bottle Lot #	Analysis	Bottle Lot #
VOCs		1,4 Dioxane		Sulfide	
MEE		Ammonia		Alkalinity	
TOC		Ferrous Iron			

Clock Time 24hr	Water Depth below MP ft	Pump Dial 1	Purge Rate ml/min	Cumm. Volume Purged liters	Temp °C	Spec. Cond. 2 uS/cm	pH	ORP/Eh3 mv	DO mg/L	Turbidity NTU	Comments
0901	22.80		125	—	—	—	—	—	—	—	Initial
0925	22.90		125	3	14.48	202	9.16	-10.4	0.24	2.04	Clear
0935	22.90		125		14.44	202	10.48	-28.6	0.23	1.51	
0940	22.90		125		14.42	201	10.50	-34.5	0.24	0.00	Colorless
0945	22.90		125		14.30	201	12.64	-53.8	0.23	0.00	
0950	22.90		125		14.24	201	13.56	-65.4	0.22	0.00	
0955	22.90		125		14.26	201	13.91	-74.1	0.23	0.00	
1000	22.90		125		14.28	201	13.41	-74.6	0.23	0.00	
1005	22.90		125		14.26	200	9.18	-57.9	0.22	0.00	
1010	22.90		125		14.34	200	15.71	-75.1	0.22	0.00	
1015	22.90		125		14.33	202	9.02	-44.7	0.23	0.00	
1020	22.90		125		14.34	201	8.00	-38.0	0.25	0.00	
1025	22.90		125		14.32	201	7.97	-31.9	0.26	0.00	
1030	22.90		125	2.0 gallon	14.39	201	7.95	-30.0	0.27	0.00	

TtNUS Form 0009

1. Pump dial setting (for example: hertz, cycle/min, etc.)
2. Siemens per cm (same as umhos/cm) at 25 °C.
3. Oxidation reduction potential (stand in for Eh).

TETRA TECH NUS, INC.

SAMPLE LOG SHEET - "LOW FLOW" GROUNDWATER

Site Name: Site 08 Disposal Area Naval Station Newport, Newport, RI
Sample ID: DA-MW-117B-D2

Tetra Tech NUS Charge No. 112g02124 FI.FS
QC: — (If applicable)

Sample Method: Bladder pump
Depth Sampled: _____ Feet Screened Interval Depth _____ feet
Sample Date & Time: 8/11/10 _____ hours —/Dup
Sampler(s): R Clark
Data Recorded By: R Clark Signature: R Clark
Notes: _____

H&S Survey Meter 0.0 PPM Field Instrument Group (A)/B/C/D
Pre-pump insertion WL 23.17 ft Post - pump insertion WL — ft

Analysis	Bottle Lot #	Analysis	Bottle Lot #	Analysis	Bottle Lot #
VOC		methane ethane ethene		TOC	
1,4 DIOXane		phosphate	sulfate	sulfide	
ammonia		Nitrate	Nitrite		

Clock Time 24hr	Water Depth below MP ft	Pump Dial 1	Purge Rate ml/min	Cumm. Volume Purged liters	Temp °C	Spec. Cond. 2 uS/cm	pH	ORP/Eh3 mv	DO mg/L	Turbidity NTU	Comments
0935	23.18	—	200	2	14.56	236	6.38	-38.6	0.83	4.33	
0940	23.18	—	200	3	14.40	235	6.25	-33.6	0.65	4.17	
0945	23.18	—	200	4	14.20	234	6.17	-27.5	0.51	3.55	
0950	23.18	—	200	5	14.23	236	6.12	-25.0	0.46	1.58	
0955	23.18	—	200	6	14.20	238	6.10	-21.6	0.34	1.42	
1000	23.18	—	200	7	14.00	241	6.08	-20.9	0.27	2.39	
1005	23.18	—	200	8	14.06	246	6.07	-21.0	0.23	1.83	
1010	23.18	—	200	9	14.02	248	6.07	-20.3	0.25	1.74	

TtNUS Form 0009

1. Pump dial setting (for example: hertz, cycle/min, etc.)
2. Siemens per cm (same as umhos/cm) at 25 °C.
3. Oxidation reduction potential (stand in for Eh).

Fe = 0.46 Diluted
Diluted 400ml water w/ 100 ml Sample
read 0.46

TETRA TECH NUS, INC.

SAMPLE LOG SHEET - "LOW FLOW" GROUNDWATER

Site Name: Site 08 Disposal Area Naval Station Newport, Newport, RI
Sample ID: ~~DA-MW-118-D2B6~~ DA-MW118-D1

Tetra Tech NUS Charge No. 112g02124 H.HS
QC: _____ (If applicable)

Sample Method: Micro-Bladder
Depth Sampled: _____ Feet Screened Interval Depth _____ feet
Sample Date & Time: 08/10/10 1535 hours — /Dup
Sampler(s): B. Geringer
Data Recorded By: B. Geringer Signature: B. Geringer
Notes: _____

H&S Survey Meter 0.0 PPM Field Instrument Group A/(B)/C/D
Pre-pump insertion WL 26.24' ft Post - pump insertion WL 26.50 ft

Analysis	Bottle Lot #	Analysis	Bottle Lot #	Analysis	Bottle Lot #
VOCs	2x40mL				

Clock Time 24hr	Water Depth below MP ft	Pump Dial 1	Purge Rate ml/min	Cumm. Volume Purged liters	Temp °C	Spec. Cond. 2 uS/cm	pH	ORP/Eh3 mv	DO mg/L	Turbidity NTU	Comments
START: 1350											
1400	27.02	70 PSI	150	1.5	17.29	201	6.25	33.3	1.76	152	Cloudy
1410	27.05	" "	150	3.0	16.34	200	6.04	42.0	1.30	132	" "
1420	26.65		150	4.5	16.20	204	6.10	38.5	1.38	92.4	Changed out N_2
1430	27.04		150	6.0	16.34	209	6.12	40.0	1.78	81.0	Cloudy
1440	27.05		150	7.5	16.10	214	6.05	41.3	1.48	52.5	Cloudy
1450	27.05		150	9.0	15.87	218	6.07	38.6	1.43	44.9	little cloudy
1500	27.07		150	10.5	15.92	243	6.07	42.5	1.50	37.7	" "
1510	27.07		150	12.0	15.91	262	6.07	47.7	1.65	31.7	" "
1520	27.07		150	13.5	16.00	275	6.08	46.8	1.54	32.3	" "
1525	27.07		150	14.25	16.00	279	6.09	45.7	1.57	30.5	Slightly cloudy
1530	27.07	↓	150	15.00	15.90	283	6.08	44.8	1.56	29.9	" "
	Reached	Stabilized	- collected	Sample							

TtNUS Form 0009

1. Pump dial setting (for example: hertz, cycle/min, etc.)
2. Siemens per cm (same as umhos/cm) at 25 °C.
3. Oxidation reduction potential (stand in for Eh).

TETRA TECH NUS, INC.

SAMPLE LOG SHEET - "LOW FLOW" GROUNDWATER

Site Name: Site 08 Disposal Area Naval Station Newport, Newport, RI
Sample ID: OA-mw 118-02

Tetra Tech NUS Charge No. 112g02124 FLFS
QC: None (If applicable)

Sample Method: Peristaltic pump
Depth Sampled: 42.0 Feet Screened Interval Depth _____ feet
Sample Date & Time: 8/10/10 1508 hours NA /Dup
Sampler(s): Walt Payson
Data Recorded By: Walt Payson Signature: WP
Notes: _____

H&S Survey Meter 0.0 PPM Field Instrument Group A/B/C/D
Pre-pump insertion WL 26.24 ft Post - pump insertion WL _____ ft

Analysis	Bottle Lot #	Analysis	Bottle Lot #	Analysis	Bottle Lot #
VOCs					

Clock Time 24hr	Water Depth below MP ft	Pump Dial 1	Purge Rate ml/min	Cumm. Volume Purged liters	Temp °C	Spec. Cond. 2 uS/cm	pH	ORP/Eh3 mv	DO mg/L	Turbidity NTU	Comments
1406	26.24	—	—	—	—	—	—	—	—	—	Initial
1408	26.35	1200	150		15.13	216	7.77	49.6	1.79	7.67	clean
1413	26.35	1200	150		15.15	207	6.92	62.5	0.76	0.85	↓
1418	26.35	1200	150		14.92	200	6.59	66.1	0.55	0.00	Colorless
1423	26.35	1100	150		15.32	197	6.45	66.4	0.46	0.00	↓
1428	26.35	1100	150		15.32	197	6.37	65.9	0.29	0.41	clean
1433	26.35	1100	150		15.21	197	6.31	66.5	0.32	0.38	↓
1438	26.35	1100	150		14.92	197	6.25	68.5	0.37	0.00	Colorless
1443	26.35	1100	150		15.05	196	6.23	68.7	0.35	0.00	
1448	26.40	1100	150		15.04	196	6.21	69.2	0.37	0.00	
1453	26.40	1100	150		14.87	196	6.18	69.9	0.36	0.00	
1458	26.40	1100	150	↓	14.92	195	6.18	69.1	0.39	0.00	
1503	26.40	1100	150	2.0 gallons	14.99	195	6.16	68.7	0.37	0.00	↓

TtNUS Form 0009

1. Pump dial setting (for example: hertz, cycle/min, etc.)
2. Siemens per cm (same as umhos/cm) at 25 °C.
3. Oxidation reduction potential (stand in for Eh).

well parameters stabilized
Sampling Begins

TETRA TECH NUS, INC.

SAMPLE LOG SHEET - "LOW FLOW" GROUNDWATER

Site Name: Site 08 Disposal Area Naval Station Newport, Newport, RI
Sample ID: DA-MW122-063010

Tetra Tech NUS Charge No. 112g02124 HHS
QC: None (If applicable)

Sample Method: Peristaltic Pump
Depth Sampled: 5.82 Feet Screened Interval Depth NA feet
Sample Date & Time: 6/30/10 1055 hours NA /Dup
Sampler(s): Walt Pajor
Data Recorded By: Walt Pajor Signature:
Notes:

H&S Survey Meter 0.0 PPM Field Instrument Group (A)/B/C/D
Pre-pump insertion WL 4.30 ft Post - pump insertion WL 4.30 ft

Analysis	Bottle Lot #	Analysis	Bottle Lot #	Analysis	Bottle Lot #
VOCs					
1,4 Dioxane					
PCDN					

Clock Time 24hr	Water Depth below MP ft	Pump Dial 1	Purge Rate ml/min	Cumm. Volume Purged liters	Temp °C	Spec. Cond. 2 uS/cm	pH	ORP/Eh3 mv	DO mg/L	Turbidity NTU	Comments
1004	4.30	—	—	—	—	—	—	—	—	—	Initial
1010	4.30	1100	200		16.45	376	6.16	44.7	1.54	154	Cloudy
1015	4.30	1000	150		15.85	357	6.19	-5.9	1.00	138	↓
1020	4.30	1000	150		15.82	346	6.19	-11.3	0.74	44.1	Slightly
1025	4.30	1000	150		15.74	343	6.20	-3.4	0.66	54.9	↓
1030	4.30	1000	150		15.77	334	6.24	-11.2	1.51	2.61	Clear
1035	4.30	1000	150		15.99	331	6.19	-23.5	0.67	0.88	↓
1040	4.30	1000	150		16.06	331	6.19	-28.5	0.64	0.00	Colorless
1045	4.30	1000	150	↓	16.08	330	6.19	-31.1	0.60	0.00	↓
1050	4.30	1000	150	2.0 Gallons	16.09	329	6.18	-32.1	0.60	0.00	↓
	←		Well	Parameters		Stabilize				→	
	←			Sampling	Begins					→	

TtNUS Form 0009

1. Pump dial setting (for example: hertz, cycle/min, etc.)
2. Siemens per cm (same as umhos/cm) at 25 °C.
3. Oxidation reduction potential (stand in for Eh).

TETRA TECH NUS, INC.

SAMPLE LOG SHEET - "LOW FLOW" GROUNDWATER

Site Name: Site 08 Disposal Area Naval Station Newport, Newport, RI
Sample ID: DA-MW124B-0810

Tetra Tech NUS Charge No. 112g02124 FI.FS
QC: None (If applicable)

Sample Method: Bladder pump
Depth Sampled: 45.0 Feet Screened Interval Depth NA feet
Sample Date & Time: 8/11/10 1446 hours NA /Dup
Sampler(s): Walt Payon
Data Recorded By: Walt Payon Signature:
Notes:

H&S Survey Meter 0.0 PPM Field Instrument Group A/B/C/D
Pre-pump insertion WL 4.65 ft Post - pump insertion WL 4.65 ft

Analysis	Bottle Lot #	Analysis	Bottle Lot #	Analysis	Bottle Lot #
PGDN					

Clock Time 24hr	Water Depth below MP ft	Pump Dial 1	Purge Rate ml/min	Cumm. Volume Purged liters	Temp °C	Spec. Cond. 2 uS/cm	pH	ORP/Eh3 mv	DO mg/L	Turbidity NTU	Comments
1324	4.65	—	—	—	—	—	—	—	—	—	Initial
1326	4.65	—	270		18.73	542	6.79	-64.8	2.32	13.4	Small particles
1331	5.00	—	270		16.42	559	6.49	-72.4	0.48	10.9	
1336	5.35	—	160		17.31	557	6.42	-73.3	0.32	12.7	
1341	5.45	—	80		18.61	556	6.40	-73.8	0.30	12.2	
1346	5.50	—			20.03	556	6.40	-74.2	0.33	13.0	
1351	5.55	—			20.75	555	6.40	-73.2	0.30	11.8	
1356	5.60	—			20.86	554	6.40	-73.8	0.35	11.8	
1401	5.65	—			20.85	552	6.41	-73.7	0.33	10.8	
1406	5.70	—			20.69	550	6.42	-74.7	0.38	10.3	
1411	5.75	—			20.57	548	6.43	-74.5	0.41	9.97	
1421	5.80	—			20.51	547	6.43	-74.1	0.40	11.2	
1431	5.90	—			20.40	548	6.43	-75.0	0.39	7.80	
1436	5.85	—			20.26	547	6.44	-75.9	0.38	7.86	

TtNUS Form 0009

1. Pump dial setting (for example: hertz, cycle/min, etc.)
2. Siemens per cm (same as umhos/cm) at 25 °C.
3. Oxidation reduction potential (stand in for Eh).

TETRA TECH NUS, INC.

SAMPLE LOG SHEET - "LOW FLOW" GROUNDWATER

Site Name: Site 08 Disposal Area Naval Station Newport
Sample ID: DA-MW124B-0810

Tetra Tech NUS Charge No. 112G02124 - F1.FS
QC: NONE (If applicable)

Clock Time 24hr	Water Depth below MP ft	Pump Dial 1	Purge Rate ml/min	Cumm. Volume Purged liters	Temp °C	Spec. Cond. 2 uS/cm	pH	ORP/Eh3 mv	DO mg/L	Turbidity NTU	Comments
1441	6.00	—	80	2.0 gallons	20.14	547	6.44	-75.1	0.40	7.86	clear
	←		WQM parameters			stabilize				→	
	←			Sampling Begins						→	

TtNUS Form 0009

1. Pump dial setting (for example: hertz, cycle/min, etc.)
2. Siemens per cm (same as umhos/cm) at 25 °C.
3. Oxidation reduction potential (stand in for Eh).

TETRA TECH NUS, INC.

SAMPLE LOG SHEET - "LOW FLOW" GROUNDWATER

Site Name: Site 08 Disposal Area Naval Station Newport, Newport, RI
Sample ID: DA-MW-127B-081010

Tetra Tech NUS Charge No. 112g02124 HHS
QC: MS/MSD (If applicable)

Sample Method: Bladder pump
Depth Sampled: _____ Feet / Screened Interval Depth _____ feet
Sample Date & Time: 8/10/10 _____ hours _____ /Dup
Sampler(s): R Clark
Data Recorded By: R Clark Signature: R Clark
Notes: _____

H&S Survey Meter 0.0 PPM Field Instrument Group A/B/C/D
Pre-pump insertion WL 22.82 ft ~~Post-pump insertion WL~~ ____ ft

Analysis	~~Bottle Lot #~~	Analysis	~~Bottle Lot #~~	Analysis	~~Bottle Lot #~~
VOC		methane/ethane/ethene		TOC	
14Dioxane		Phosphate		Sulfide	
ammonia		Nitrate		Nitrite	
Sulfate					

Clock Time 24hr	Water Depth below MP ft	Pump Dial 1	Purge Rate ml/min	Cumm. Volume Purged liters	Temp °C	Spec. Cond. 2 uS/cm	pH	ORP/Eh3 mv	DO mg/L	Turbidity NTU	Comments
0835	pump	on									
0845	22.84	—	160	1	14.86	468	6.35	-29.8	0.77	788	
0855	22.84	—	160	3	13.59	392	6.47	-31.8	0.60	128	
0905	22.84	—	160	5	13.32	377	6.39	-29.7	0.45	38.7	
0915	22.84	—	160	7	13.21	377	6.40	-29.5	0.31	17.6	
0925	22.85	—	160	9	13.27	373	6.41	-32.5	0.25	5.74	
0930	Changed tube										
1000	22.84	—	160	13	13.79	388	6.45	-33.8	0.62	6.74	
1004	22.84	—	160	15	13.62	388	6.44	-33.3	0.56	5.08	
1008	22.84	—	160	17	13.60	390	6.44	-33.1	0.50	5.37	

TtNUS Form 0009

1. Pump dial setting (for example: hertz, cycle/min, etc.)
2. Siemens per cm (same as umhos/cm) at 25 °C.
3. Oxidation reduction potential (stand in for Eh).

Fe = 2.09

TETRA TECH NUS, INC.

SAMPLE LOG SHEET - "LOW FLOW" GROUNDWATER

Site Name: Site 08 Disposal Area Naval Station Newport, Newport, RI
Sample ID: MW-128B

Tetra Tech NUS Charge No. 112g02124 H.H.S
QC: none (If applicable)

Sample Method: Bladder Pump
Depth Sampled: 40 Feet Screened Interval Depth 35-45 feet
Sample Date & Time: 8/9/10 ____ hours ____ /Dup
Sampler(s): R Clark
Data Recorded By: R Clark Signature: R Clark
Notes: ____

H&S Survey Meter 0.0 PPM Field Instrument Group A/B/C/D (YSI = A Turb = B)
Pre-pump insertion WL 24.65 ft ~~Post - pump insertion WL~~ ____ ft

Analysis ~~Bottle Lot #~~ Analysis ~~Bottle Lot #~~ Analysis ~~Bottle Lot #~~

VOC	~~HCL~~	methane	Ferrous iron	sulfate
1,4 Dioxane		ethene	phosphate	TOC
Ammonia		ethane	Nitrate	Nitrite

1415 collect sample

Clock Time 24hr	Water Depth below MP ft	Pump Dial 1	Purge Rate ml/min	Cumm. Volume Purged liters	Temp °C	Spec. Cond. 2 uS/cm	pH	ORP/Eh3 mv	DO mg/L	Turbidity NTU	Comments
1235	24.65										
1259	24.66		150	1	15.43	340	6.77	16.6	1.06	70.6	
1310	24.66		150	3	14.01	344	6.35	43.5	0.53	56.4	
1320	24.67		150	5	13.67	342	6.31	41.9	0.33	42.1	
1330	24.65		150	7	13.57	337	6.30	40.9	0.26	30.6	
1340	24.65		150	9	13.86	336	6.29	39.7	0.25	10.69	
1350	24.65		150	11	13.79	339	6.28	34.7	0.24	6.86	
1400	24.65		150	13	13.61	345	6.29	32.7	0.23	3.20	
1405	24.65		150	15	13.46	346	6.30	35.9	0.20	3.90	
1410	24.65		150	18	13.38	348	6.29	34.8	0.20	3.10	

TtNUS Form 0009

Fe = 0.13 mg/L

1. Pump dial setting (for example: hertz, cycle/min, etc.)
2. Siemens per cm (same as umhos/cm) at 25 °C.
3. Oxidation reduction potential (stand in for Eh).

TETRA TECH NUS, INC.

SAMPLE LOG SHEET - "LOW FLOW" GROUNDWATER

Site Name: Site 08 Disposal Area Naval Station Newport, Newport, RI
Sample ID: MW 129B-0810

Tetra Tech NUS Charge No. 112g02124 H.H.S
QC: DA-MW Dupo1-0810 (If applicable)

Sample Method: Bladder pump
Depth Sampled: 13.5 Feet Screened Interval Depth NA feet
Sample Date & Time: 8/10/10 1045 hours 01 /Dup
Sampler(s): Walt Puyon
Data Recorded By: Walt Puyon Signature: WP
Notes: Ferrous Iron Reading 0.00 @ 1103

H&S Survey Meter 0.0 PPM Field Instrument Group A/B/C/D
Pre-pump insertion WL 5.10 ft Post - pump insertion WL 5.20 ft

Analysis	Bottle Lot #	Analysis	Bottle Lot #	Analysis	Bottle Lot #
VOCs		Sulfide		1,4 Dioxane	
MEE		P/alk/TS		Ferrous Iron	
TOC		Ammonia			

Clock Time 24hr	Water Depth below MP ft	Pump Dial 1	Purge Rate ml/min	Cumm. Volume Purged liters	Temp °C	Spec. Cond. 2 uS/cm	pH	ORP/Eh3 mv	DO mg/L	Turbidity NTU	Comments
0900	5.10	—	—	—	—	—	—	—	—	—	Initial
0905	5.20	—	250		17.03	642	6.36	-4.2	4.02	20.2	Slightly
0910	5.20	—	250		15.68	649	6.46	-5.7	0.75	19.2	
0915	5.20	—	200		15.96	652	6.52	14.5	0.52	11.7	
0920	5.20	—	200		15.86	653	6.55	20.5	0.42	16.9	
0925	5.20	—	200		15.77	652	6.56	24.9	0.36	19.2	
0930	5.20	—	200		15.75	652	6.58	27.9	0.36	22.2	
0935	5.20	—	200		15.63	652	6.60	30.2	0.33	20.0	
0940	5.20	—	200		15.67	652	6.59	35.3	0.32	14.2	
0945	5.20	—	200		15.65	652	6.57	35.7	0.31	13.0	
0955	5.20	—	200		15.67	651	6.62	34.7	0.31	10.0	Clear
1005	5.20	—	200		15.47	652	6.58	37.1	0.27	5.60	
1015	5.20	—	200		15.51	651	6.60	36.9	0.28	3.86	
1025	5.20	—	200		15.60	650	6.60	36.1	0.27	3.47	

TtNUS Form 0009

1. Pump dial setting (for example: hertz, cycle/min, etc.)
2. Siemens per cm (same as umhos/cm) at 25 °C.
3. Oxidation reduction potential (stand in for Eh).

TETRA TECH NUS, INC.

SAMPLE LOG SHEET - "LOW FLOW" GROUNDWATER

Site Name: Site 08 Disposal Area Naval Station Newport, Newport, RI
Sample ID: MW129B-0810

Tetra Tech NUS Charge No. 112g02124 FLFS
QC: _____ (If applicable)

Sample Method: _____
Depth Sampled: _____ Feet Screened Interval Depth _____ feet
Sample Date & Time: __/__/__ _____ hours _____ /Dup
Sampler(s): _____
Data Recorded By: _____ Signature: _____
Notes: _____

H&S Survey Meter _____ PPM Field Instrument Group A/B/C/D
Pre-pump insertion WL _____ ft Post - pump insertion WL _____ ft

Analysis	Bottle Lot #	Analysis	Bottle Lot #	Analysis	Bottle Lot #

Clock Time 24hr	Water Depth below MP ft	Pump Dial 1	Purge Rate ml/min	Cumm. Volume Purged liters	Temp °C	Spec. Cond. 2 uS/cm	pH	ORP/Eh3 mv	DO mg/L	Turbidity NTU	Comments
1030	5.20		200	↓	15.58	~~6.61~~ 650	6.61	36.0	0.27	0.00	Colorless
1035	5.20		↓	↓	15.59	~~6.63~~ 650	6.63	35.9	0.26	0.00	↓
1040	5.20		↓	7.0 gallons	15.56	~~6.63~~ 651	6.63	35.7	0.25	0.00	↓
						650					
						650					
						651					

TtNUS Form 0009

1. Pump dial setting (for example: hertz, cycle/min, etc.)
2. Siemens per cm (same as umhos/cm) at 25 °C.
3. Oxidation reduction potential (stand in for Eh).

TETRA TECH NUS, INC.

SAMPLE LOG SHEET - "LOW FLOW" GROUNDWATER

Site Name: Site 08 Disposal Area Naval Station Newport, Newport, RI
Sample ID: MW130B-0810

Tetra Tech NUS Charge No. 112g02124 H.HS
QC: none (If applicable)

Sample Method: Bladder pump
Depth Sampled: 23.0 Feet Screened Interval Depth NA feet
Sample Date & Time: 8/9/10 1538 hours NA /Dup
Sampler(s): Walt Ryan
Data Recorded By: Walt Ryan Signature:
Notes:

H&S Survey Meter 0.0 PPM Field Instrument Group A/B/C/D
Pre-pump insertion WL 7.00 ft Post - pump insertion WL 7.20 ft

Analysis	Bottle Lot #	Analysis	Bottle Lot #	Analysis	Bottle Lot #
VOCs					
PCBs					

Clock Time 24hr	Water Depth below MP ft	Pump Dial 1	Purge Rate ml/min	Cumm. Volume Purged liters	Temp °C	Spec. Cond. 2 uS/cm	pH	ORP/Eh3 mv	DO mg/L	Turbidity NTU	Comments
1335	7.00	—	—	—	—	—	—	—	—	—	Initial
1338	7.20	—	130		18.50	920	7.05	50.8	5.98	55.0	Slightly
1343	7.20	—	130		18.92	918	6.65	54.7	3.06	42.8	
1348	7.20	—	130		19.56	925	6.57	60.1	2.82	57.6	
1353	7.20	—	130		19.51	925	6.53	64.7	2.73	61.2	
1358	7.20	—	130		19.44	923	6.51	67.8	2.45	54.5	
1403	7.20	—	130		19.31	920	6.48	70.7	2.73	44.7	
1408	7.20	—	130		19.21	918	6.47	72.4	2.62	47.6	
1413	7.20	—	130		19.11	918	6.46	73.6	2.54	38.5	
1418	7.20	—	130		19.02	917	6.46	74.6	2.45	42.1	
1423	7.20	—	130		18.94	917	6.46	75.0	2.51	39.1	
1433	7.20	—	130		18.76	918	6.46	75.5	2.68	37.1	
1443	7.20	—	130		18.74	918	6.46	76.0	2.71	32.6	
1453	7.20	—	130		18.67	917	6.46	76.3	2.52	32.1	

TtNUS Form 0009

1. Pump dial setting (for example: hertz, cycle/min, etc.)
2. Siemens per cm (same as umhos/cm) at 25 °C.
3. Oxidation reduction potential (stand in for Eh).

TETRA TECH NUS, INC.

SAMPLE LOG SHEET - "LOW FLOW" GROUNDWATER

Site Name: Site 08 Disposal Area Naval Station Newport
Sample ID: MW 130B - 0810

Tetra Tech NUS Charge No. 112G02124 - F1.FS
QC: None (If applicable)

Clock Time 24hr	Water Depth below MP ft	Pump Dial 1	Purge Rate ml/min	Cumm. Volume Purged liters	Temp °C	Spec. Cond. 2 uS/cm	pH	ORP/Eh3 mv	DO mg/L	Turbidity NTU	Comments
1503	7.20	—	130	↓	18.57	917	6.46	76.1	2.72	22.5	Slightly
1513	7.20	—	130	↓	18.55	917	6.46	76.0	2.60	20.8	↓
1523	7.20	—	130	↓	18.37	914	6.44	77.7	2.66	19.3	
1533	7.20	—	130	6.0 gallons	18.22	918	6.41	78.3	2.69	20.1	
~~1808~~											
	← Well parameters Stabilize →										
	← Sampling Begins →										

TtNUS Form 0009

1. Pump dial setting (for example: hertz, cycle/min, etc.)
2. Siemens per cm (same as umhos/cm) at 25 °C.
3. Oxidation reduction potential (stand in for Eh).

Tetra Tech NUS, Inc.

SURFACE WATER SAMPLE LOG SHEET

Project Site Name: TANK FARMS 4 & 5, CTO 464
Project No.: 112G00963

Sample ID No.: DA-SW-B179-04-0610
Sample Location: B179-04
Sampled By: MH WP
C.O.C. No.:

[✓] Stream
[ ] Spring
[ ] Pond
[ ] Lake
[ ] Other:
[ ] QA Sample Type:

Type of Sample:
[ ] Low Concentration
[ ] High Concentration

SAMPLING DATA:

Date: 6/25/10 Time: 1325 Depth: 0-6" Method: Direct Dip	Color (Visual)	pH (S.U.)	S.C. (mS/cm)	Temp. (°C)	Turbidity (NTU)	DO (mg/l)	Salinity (%)	ORP (mV)
	Colorless	7.16	473	20.57	13.8	9.19	NA	66.2

SAMPLE COLLECTION INFORMATION:

Analysis	Preservative	Container Requirements	Collected
~~VOA's~~	~~HCl~~	~~3 - 40mL vials~~	~~Yes / No~~
SVOCs/~~PAH~~	4° C	2 - 1L Ambers	Yes / No
~~Pesticides/PCBs~~	4° C	2 - 1L Ambers	Yes / No
~~Metals (filtered & unfiltered)~~	HNO3	2 - 500mL poly	Yes / No

OBSERVATIONS / NOTES:

- Sample collected at center of stream in low flow ponded area

MAP:

Circle if Applicable:

MS/MSD	Duplicate ID No.:
NA	NA

Signature(s):

Tetra Tech NUS, Inc.

SURFACE WATER SAMPLE LOG SHEET

Project Site Name: NUSC Disposal Area ~~TANK FARMS 4 & 5, CTO 464~~
Project No.: ~~112G00983~~ 112G02124

[✓] Stream
[ ] Spring
[ ] Pond
[ ] Lake
[ ] Other:
[ ] QA Sample Type:

Sample ID No.: DA-SW-B179-02-0610
Sample Location: B179-02
Sampled By: MH WP
C.O.C. No.:

Type of Sample:
[ ] Low Concentration
[ ] High Concentration

SAMPLING DATA:

Date: 6/25/10 Time: 1310 Depth: 0-6" Method: Direct Dip	Color (Visual)	pH (S.U.)	S.C. (mS/cm)	Temp. (°C)	Turbidity (NTU)	DO (mg/l)	Salinity (%)	ORP (mV)
	colorless	6.97	481	20.32	8.2	4.99	NA	47.5

SAMPLE COLLECTION INFORMATION:

Analysis	Preservative	Container Requirements	Collected
~~VOA's~~	HCl	3 - 40mL vials	Yes / (No)
SVOCs/~~PAH~~	4° C	2 - 1L Ambers	(Yes) / No
~~Pesticides/PCBs~~	4° C	2 - 1L Ambers	Yes / (No)
~~Metals (filtered & unfiltered)~~	HNO3	2 - 500mL poly	Yes / (No)
~~VOAs~~	~~HCl~~	~~3-40ml vials~~	~~Yes~~

OBSERVATIONS / NOTES:

- Sample collected in center of stream in a low flowing ponded area

MAP:

Circle if Applicable:

MS/MSD	Duplicate ID No.:
NA	NA

Signature(s):

Tetra Tech NUS, Inc.

SURFACE WATER SAMPLE LOG SHEET

Page___ of ___

Project Site Name: NUSC DISPOSAL AREA ~~TANK FARMS 4 & 5, OTC 464~~
Project No.: ~~112G00963~~ 112G02124

Sample ID No.: DA-SW-B179-01-0610
Sample Location: B179-01
Sampled By: M. Horton
C.O.C. No.:

[✓] Stream
[ ] Spring
[ ] Pond
[ ] Lake
[ ] Other:
[ ] QA Sample Type:

Type of Sample:
[ ] Low Concentration
[ ] High Concentration

SAMPLING DATA:

Date: 6/25/10 Time: 1250 Depth: 0-6" Method: Direct Dip	Color (Visual)	pH (S.U.)	S.C. (mS/cm)	Temp. (^{0}C)	Turbidity (NTU)	DO (mg/l)	Salinity (%)	ORP (mV)
	Colorless	6.78	450	19.70	11.2	4.87	NA	57.7

SAMPLE COLLECTION INFORMATION:

Analysis	Preservative	Container Requirements	Collected
~~VOA's~~	HCl	3 - 40mL vials	Yes / No
~~SVOCs/PAH~~	4° C	2 - 1L Ambers	Yes / No
~~Pesticides/PCBs~~	4° C	2 - 1L Ambers	Yes / No
~~Metals (filtered & unfiltered)~~	HNO3	2 - 500mL poly	Yes / No
SVOC	4°C	2 - 1L Amber	Yes

OBSERVATIONS / NOTES:

- Very low stream flow at location collected in ponded area

MAP:

Circle if Applicable:

MS/MSD	Duplicate ID No.:
	DA-SW-DUP01-062510

Signature(s):

Tetra Tech NUS, Inc.

SOIL & SEDIMENT SAMPLE LOG SHEET

Page___ of ___

Project Site Name: NUSC Disposal Area, Site 08
Project No.: 112G02124 FI.FS

Sample ID No.: DA-SD-B179-04-0006
Sample Location: B179-04
Sampled By: MH LDP
C.O.C. No.:

[ ] Surface Soil
[ ] Subsurface Soil
[✓] Sediment
[ ] Other:
[ ] QA Sample Type:

Type of Sample:
[ ] Low Concentration
[ ] High Concentration

GRAB SAMPLE DATA:

Date: 6/25/10	Depth Interval	Color	Description (Sand, Silt, Clay, Moisture, etc.)
Time: 1330	0-6	Dark Brown	Fine to coarse grained silty sand w/ some organics
Method: Scoop			
Monitor Reading (ppm): NA			

COMPOSITE SAMPLE DATA:

Date:	Time	Depth Interval	Color	Description (Sand, Silt, Clay, Moisture, etc.)
Method:				
Monitor Readings (Range in ppm):				

SAMPLE COLLECTION INFORMATION:

Analysis	Preservative	Container Requirements	Collected	Other
VOC's	MeOH (in one vial)	3 - 40mL Vials, 1 - 2oz jar %moisture	(YES) NO	
SVOC's ~~/ DRO~~	4° C	1 - 8oz wide mouth jar	(YES) NO	
GRO	MeOH	1 - 40mL vial	YES / (NO)	
Pesticides / PCBs	4° C	1 - 4oz wide mouth jar	YES / (NO)	
TAL Metals	4° C	1 - 4oz wide mouth jar	YES / (NO)	
Propellants	4° C	1 gallon plastic bag	YES / (NO)	
PAHs	4° C	1 - 4oz wide mouth jar	YES / (NO)	

OBSERVATIONS / NOTES:

- Sample collected from within 1' of stream bank in ponded depositional area

MAP:

Circle if Applicable:

MS/MSD	Duplicate ID No.:
NA	NA

Signature(s):

Tetra Tech NUS, Inc.

SOIL & SEDIMENT SAMPLE LOG SHEET

Page___ of ___

Project Site Name: NUSC Disposal Area, Site 08
Project No.: 112G02124 FI.FS

Sample ID No.: DA-SD-B179-02-0006
Sample Location: B179-02
Sampled By: MH WP
C.O.C. No.:

[ ] Surface Soil
[ ] Subsurface Soil
[✓] Sediment
[ ] Other:
[ ] QA Sample Type:

Type of Sample:
[ ] Low Concentration
[ ] High Concentration

GRAB SAMPLE DATA:

Date: 6/25/10	Depth Interval	Color	Description (Sand, Silt, Clay, Moisture, etc.)
Time: 1315	0-6	Dark Brown	Fine to coarse grained sandy silt with some organics
Method: Scoop			
Monitor Reading (ppm): NA			

COMPOSITE SAMPLE DATA:

Date:	Time	Depth Interval	Color	Description (Sand, Silt, Clay, Moisture, etc.)
Method:				
Monitor Readings (Range in ppm):				

SAMPLE COLLECTION INFORMATION:

Analysis	Preservative	Container Requirements	Collected	Other
VOC's	MeOH (in one vial)	3 - 40mL Vials, 1 - 2oz jar %moisture	(YES) / NO	
SVOC's ~~/ DRO~~	4° C	1 - 8oz wide mouth jar	(YES) / NO	
GRO	MeOH	1 - 40mL vial	YES / (NO)	
Pesticides / PCBs	4° C	1 - 4oz wide mouth jar	YES / (NO)	
TAL Metals	4° C	1 - 4oz wide mouth jar	YES / (NO)	
Propellants	4° C	1 gallon plastic bag	YES / (NO)	
PAHs	4° C	1 - 4oz wide mouth jar	YES / (NO)	

OBSERVATIONS / NOTES:

Sample collected toward center of ponded area in depositional environment

MAP:

Circle if Applicable:

MS/MSD NA

Duplicate ID No.: NA

Signature(s):

MH WP

Tetra Tech NUS, Inc.

SOIL & SEDIMENT SAMPLE LOG SHEET

Page___ of ___

Project Site Name: NUSC Disposal Area, Site 08
Project No.: 112G02124 FI.FS

[ ] Surface Soil
[ ] Subsurface Soil
[ ] Sediment
[ ] Other:
[ ] QA Sample Type:

Sample ID No.: DA-SD-B179-01-0006
Sample Location: B179-01
Sampled By: MH WP
C.O.C. No.:

Type of Sample:
[ ] Low Concentration
[ ] High Concentration

GRAB SAMPLE DATA:

Date: 6/25/10	Depth Interval	Color	Description (Sand, Silt, Clay, Moisture, etc.)
Time: 1300	0-6"	Dark Brown	Fine to coarse grained sandy silt with some organics
Method: Grab			
Monitor Reading (ppm): NA			

COMPOSITE SAMPLE DATA:

Date:	Time	Depth Interval	Color	Description (Sand, Silt, Clay, Moisture, etc.)
Method:				
Monitor Readings (Range in ppm):				

SAMPLE COLLECTION INFORMATION:

Analysis	Preservative	Container Requirements	Collected	Other
VOC's	MeOH (in one vial)	3 - 40mL Vials, 1 - 2oz jar %moisture	(YES) / NO	
SVOC's ~~/ DRO~~	4° C	1 - 8oz wide mouth jar	(YES) / NO	
GRO	MeOH	1 - 40mL vial	YES / (NO)	
Pesticides / PCBs	4° C	1 - 4oz wide mouth jar	YES / (NO)	
TAL Metals	4° C	1 - 4oz wide mouth jar	YES (NO)	
Propellants	4° C	1 gallon plastic bag	YES / (NO)	
PAHs	4° C	1 - 4oz wide mouth jar	YES / (NO)	

OBSERVATIONS / NOTES:

Sediment collected from within 1' of stream bank in depositional area

MAP:

Circle if Applicable:

MS/MSD	Duplicate ID No.:
NA	DA-SD-DUP01-062510

Signature(s):

MH

TETRA TECH NUS, INC.

Ferrous Iron Analysis
Method: Hach 1, 10-Phenanthroline

Site Name: Site 8 Disposal Area Event:

Date: 6-30-10 / 7-1-10 Analyst:

Sample ID	Fe2+ Sample Time	Fe2+ Analysis Time	Turbidity prior to Fe2+ Sample (NTUs)	Sample Color Pre-Reaction	Dilution (DL)	Instr. Reading (mg/L)	Sample Result (X DL) (mg/L)	Sample Color Post Reaction	Zero Blank Sample (Y/N)	Initials	Comments
Zeroing the Instrument											DIUF
Method Blank											DIUF and Ferrous Iron Reagent
DA-MW12-063010	1440	1443	1.62	clear		1X	~~mp~~ 0.00	Clear		mp	
~~DA~~											
DA-MW103B-070110	1140	1143	147	cloudy		1X	2.92	Orange		mp	

Notes:

- Rinse beakers, flasks, and pipettes thoroughly w/DIUF, distilled water, or Poland spring water prior to start, air dry
- HACH DR/890 Colorimeter, S/N=_____; Program 33; Est. detection limit is 0.03 mg/L.
- Using HACH Ferrous Iron Accuvac Ampoules, Lot _____; Expiration_____
- Using NERL Reagent Grade Water, Lot_____; Expiration _____
- Zeroing the instrument initially and screening a method blank once daily with DIUF or Poland Spring water.
- Zeroing the instrument using an aliquot of sample water prior to screening the sample.
- Field measurements for _____task. No laboratory standard solution prepared or used.

TETRA TECH NUS, INC.

Ferrous Iron Analysis
Method: Hach 1, 10-Phenanthroline

Site Name: NUSC Disposal Area **Event:**

Date: 6/28/10 **Analyst:**

Sample ID	Fe2+ Sample Time	Fe2+ Analysis Time	Turbidity prior to Fe2+ Sample (NTUs)	Sample Color Pre-Reaction	Dilution (DL)	Instr. Reading (mg/L)	Sample Result (X DL) (mg/L)	Sample Color Post Reaction	Zero Blank Sample (Y/N)	Initials	Comments
Zeroing the Instrument	~~1300~~ 1257					0.00					DIUF
Method Blank											DIUF and Ferrous Iron Reagent
DA-MW-105B-062810	1211	1258	clear 9	Colorless	1X	0.11	NA	colorless			
DA-MW-03B-062810	1310	1311	3.00	colorless	1X	0.41	NA	colorless			
DA-MW-DUP01-062810	1310	1316	3.00	colorless	1X	0.74	NA	colorless			MW-03B
DA-MW-09B-062910	1340	1342	18	rusty	1X	3.30	NA	orange			
DA-MW-09B-062910-A	1340	1616	18	rusty	2.5X	0.45					
DA-MW-11-062910	1700	1715	1	Clear	1X	0.53		Clear			

Notes:

- Rinse beakers, flasks, and pipettes thoroughly w/DIUF, distilled water, or Poland spring water prior to start, air dry
- HACH DR/890 Colorimeter, S/N=_____; Program 33; Est. detection limit is 0.03 mg/L.
- Using HACH Ferrous Iron Accuvac Ampoules, Lot _____; Expiration_____
- Using NERL Reagent Grade Water, Lot_____; Expiration _____
- Zeroing the instrument initially and screening a method blank once daily with DIUF or Poland Spring water.
- Zeroing the instrument using an aliquot of sample water prior to screening the sample.
- Field measurements for _____task. No laboratory standard solution prepared or used.

TETRA TECH NUS, INC.

Ferrous Iron Analysis
Method: Hach 1, 10-Phenanthroline

Site Name: Site 08 Disposal Area – NUSC Newport Naval Station
Event: Summer 2010
Date: 6/23/10 / 6-22-10
Analyst: Michael Alroy / Walt Pryor

Sample ID	Fe2+ Sample Time	Fe2+ Analysis Time	Turbidity prior to Fe2+ Sample (NTUs)	Sample Color Pre-Reaction	Dilution	~~Initial~~ Reading (mg/L)	x DF. Final Result (mg/L) *	Sample Color Post Reaction	Initials	Zero Blank Sample (Y/N)	Comments
Zeroing the Instrument											DIUF
Method Blank											DIUF and Ferrous Iron Reagent
DA-MW101B-062310	16:35	1639	48.6	CLEAR	N/A	0.0	0.0	CLEAR	MIA		
DA-MW74-062310	16:49	16:52	2.68	CLEAR	1:2.5	0.0	2.28	ORANGE	MIA	BY HAND	* ?
↓	16:55	16:58	2.68	CLEAR	1:2.5	0.0	>MDL	ORANGE	MIA	IN AMPULE	
↓	17:00	17:03	2.68	CLEAR	1:10	0.0	1.30	ORANGE	MIA	IN AMPULE	
DA-MW7B-062210	12:00	12:03	139	Cloudy	N/A	0.0	1.01	Cloudy	WP	in Ampule	

Notes:

- Rinse beakers, flasks, and pipettes thoroughly w/DIUF, distilled water, or Poland spring water prior to start, air dry
- HACH DR/890 Colorimeter, S/N=_____; Program 33; Est. detection limit is 0.03 mg/L.
- Using HACH Ferrous Iron Accuvac Ampoules, Lot _____; Expiration_____
- Using NERL Reagent Grade Water, Lot_____; Expiration _____
- Zeroing the instrument initially and screening a method blank once daily with DIUF or Poland Spring water.
- Zeroing the instrument using an aliquot of sample water prior to screening the sample.
- Field measurements for _____task. No laboratory standard solution prepared or used.

* need to multiply by DF.

TETRA TECH NUS, INC.

Ferrous Iron Analysis
Method: Hach 1, 10-Phenanthroline

Site Name: **Event:**

Date: 7/29/10 **Analyst:** RC/WP.

Sample ID	Fe2+ Sample Time	Fe2+ Analysis Time	Turbidity prior to Fe2+ Sample (NTUs)	Sample Color Pre-Reaction	Dilution (DL)	Instr. Reading (mg/L)	Sample Result (X DL) (mg/L)	Sample Color Post Reaction	Zero Blank Sample (Y/N)	Initials	Comments
Zeroing the Instrument											DIUF
Method Blank	1130										DIUF and Ferrous Iron Reagent
GW-B185A3-SB1	~~1205~~	1205	7.02		—		0			RMC	

Notes:

- Rinse beakers, flasks, and pipettes thoroughly w/DIUF, distilled water, or Poland spring water prior to start, air dry
- HACH DR/890 Colorimeter, S/N=_____; Program 33; Est. detection limit is 0.03 mg/L.
- Using HACH Ferrous Iron Accuvac Ampoules, Lot _____; Expiration_____
- Using NERL Reagent Grade Water, Lot_____; Expiration _____
- Zeroing the instrument initially and screening a method blank once daily with DIUF or Poland Spring water.
- Zeroing the instrument using an aliquot of sample water prior to screening the sample.
- Field measurements for _____task. No laboratory standard solution prepared or used.

TETRA TECH NUS, INC.

Mod # 1

FIELD MODIFICATION RECORD

Site Name: Site 08 NUWC Location: Newport RI

Project Number: 117G02124 Task Assignment:

To: J Forelli Location: Boston Date: July 6, 2010

Description: Work plan calls for soil VOC samples to be preserved w/ DI and frozen

Reason for Change: No freezer available

Recommended Action: replaced DI w/ Sodium bisulfate

Field Operations Leader (Signature): Robin Clark Date: 7/6/10

Disposition/Action: Proceed with action proposed

Project Manager (Signature): [signature] Date: 7/6/10

Distribution:

		Others as Required:
Program Manager:	John Trepanowski	
Project Manager:	Jim Forelli	
Quality Assurance Officer:	—	
Field Operations Leader:	Robin Clark	
Project File:	02124	

TtNUS Form 0003

Mod # 2

TETRA TECH NUS, INC.

FIELD MODIFICATION RECORD

Site Name: Site 08 NUWC Location: Newport RI

Project Number: 112G02124 Task Assignment: _____

To: J. Forelli Location: BOSTON Date: 7/14/10

Description: Work Plan States that MW-127 + 128 should be drilled 80ft below top of casing w/ 2 nested 1in wells installed

Reason for Change: Both locations were yielding over 55 gal in 5 minutes

Recommended Action: Stopped MW-127 at 46ft and MW-128 at 51 ft. Will Develop and See ~~how~~ if we need to drill further →

Field Operations Leader (Signature): Robert Clark Date: 7/14/10

Disposition/Action: approved

Project Manager (Signature): [signature] Date: 7/14/10

Distribution:

		Others as Required:
Program Manager:	J. Trepanowski	
Project Manager:	J. Forelli	
Quality Assurance Officer:	—	
Field Operations Leader:	R. Clark	
Project File:	02124	

TtNUS Form 0003

TETRA TECH NUS, INC.

Mod # 3

FIELD MODIFICATION RECORD

Site Name: Site 08 NUWC Location: NAVSTA Newport

Project Number: 112G02124 Task Assignment:

To: J Forelli Location: Boston Date: 7/14/10

Description: 3.2.1.11 3 wells in Bldg 179 area - R179-MW1, R179-MW2, R179-MW3 to be redeveloped + Sampled

Reason for Change: Wells could not be located

Recommended Action: Wells NOT developed or Sampled

Field Operations Leader (Signature): Rclark Date: 7/14/10

Disposition/Action: notified client & EPA & RIDEM in phone call

Project Manager (Signature): [signature] Date: 7/14/10

Distribution:

		Others as Required:
Program Manager:	J. Trepanowski	
Project Manager:	J. Forelli	
Quality Assurance Officer:	—	
Field Operations Leader:	R. Clark	
Project File:	02124	

TtNUS Form 0003

TETRA TECH NUS
FIELD TASK MODIFICATION REQUEST FORM

NAUSTA Newport	CTO WE19 112G08124	#4
Project/Installation Name	CTO & Project Number	Task Mod. Number
Work Plan Addendum	NUSC Disposal Area	7/27/10
Modification To (e.g. Work Plan)	Site/Sample Location	Date

Activity Description: Section 3.2.2 - During sediment sampling overlying water from each of the sediment samples will be analyzed for pH, DO, ammonia, temp, cond. hardness and alkalinity. Were not collected.

Reason for Change: Water quality parameters including pH, DO, Temp and conductivity were recorded during sampling of co-located SW sample. Ammonia, hardness and alkalinity analysis was not conducted because sample yielded little to no overlying water after homogenization.

Recommended Disposition: Move forward using water quality parameters recorded during SW sampling and do not sample for ammonia, hardness or alkalinity.

Field Operations Leader (Signature) — Date: 7/27/10

Approved Disposition: approved

Project/Task Order Manager (Signature) — Date: 7/27/10

Distribution:

Program/Project File – 02124
Project/Task Order Manager – M. Horton/R. Clark
Field Operations Leader –
Other: J. Forelli, J. Trepanowski

TETRA TECH NUS, INC.

FIELD MODIFICATION RECORD

Mod # 5.

Site Name: Site 08 NUWC Location: Newport RI

Project Number: 112G02124 Task Assignment:

To: J Forelli Location: Boston Date: 8/13/10

Description: SW/SD-B179-01 and 02 were marked wrong in the field prior to sampling. Samples were collected and labeled based on field markings

Reason for Change: See above

Recommended Action: Update field map to reflect actual samples collected

Field Operations Leader (Signature): Robin Clark Date: 8/13/10

Disposition/Action:

Project Manager (Signature): Date: 8/19/10

Distribution:

		Others as Required:
Program Manager:	John Trepanowski	
Project Manager:	Jim Forelli	
Quality Assurance Officer:		
Field Operations Leader:	Robin Clark	
Project File:	02124	

TtNUS Form 0003

ATTACHMENT D

LABORATORY REPORTS AND DATA VALIDATION MEMORANDA

TETRA TECH

INTERNAL CORRESPONDENCE

C-NAVY-09-10-3878W

Date: September 30, 2009

c: File G02124-4.10 (w/enc.-original)
D. Seiken (w/o enc.)

To: J. Forrelli (w/o enc.)

From: J. Cardinal (no copy)

Subject: Tier II Inorganic Data Validation, SDG WE19-7
Katahdin Analytical Services
CTO WE19, Site 08 – NUSC Disposal Area, Naval Station Newport, Middletown, RI

Metals:

8/Soils/	B179-SB1-0001	B179-SB1-0507
	B179-SB2-0001	B179-SB2-0709
	B179-SB3-0001	B179-SB3-0709
	B179-SB-DUP01	B179-SB-DUP02

(Field duplicate pairs: B179-SB3-0001/B179-SB-DUP01, B179-SB1-0001/B179-SB-DUP02)

Tetra Tech NUS, Inc. (TtNUS) performed a Tier II data validation on the metals analytical data for the soil samples collected at Site 08 at the Naval Undersea System Center (NUSC) Disposal Area, Naval Station Newport, Middletown, Rhode Island site on July 27, 2010. Sample analysis was performed according to the Work Plan for Remedial Investigation Revision 2 for Site 08 – NUSC Disposal Area, Naval Station Newport, Middletown, Rhode Island dated January 2007 and Addendum dated June 2010.

The metals analysis was performed according to USEPA SW-846 Methods 6010/6020/7471. The metals data validation was performed in accordance with the Region I EPA-NE Data Validation Functional Guidelines for Evaluating Environmental Analyses, Part IV, November 2008.

The sample results, validation qualifiers (VQL), and qualifier codes (QLCD) are presented in the enclosed data summary tables. A list of the qualifier codes, which provide the reasons for the validation qualifiers, is enclosed.

The data were evaluated based on the following parameters:

- Data Completeness
* • Holding Times
* • ICP-MS Tune
* • ICP-MS Internal Standard Performance
* • Calibration Verification
- Laboratory Blank Analyses
- ICP Interference Check Sample Results
- Matrix Spike
- Laboratory Duplicate Results
* • Laboratory Control Sample Results
- Field Duplicate Precision

- ICP Serial Dilution Results
* • Percent Solids
- Reporting Limits

* All criteria were met for this parameter.

Data Completeness

For select samples, the percent solids listed in the Form Is differ slightly from the actual percent solids in the raw data (by 0.1) due to software rounding. The data summary tables contain the correct percent solids per the raw data.

On September 27, 2010 the laboratory provided the Form 10 for the aqueous MDLs since they were not provided in the original data package.

Laboratory Blank Analyses

Metals

The following table summarizes the maximum levels of laboratory blank contamination and blank action levels applied to the soil samples:

Analyte	Max. Conc. (µg/L)	Action Level (mg/kg)	Affected Samples
Cadmium	0.32	0.16	B179-SB2-0709, B179-SB3-0001, B179-SB3-0709, B179-SB-DUP01
Molybdenum	1.60	0.8	B179-SB1-0507, B179-SB2-0001, B179-SB3-0001, B179-SB3-0709, B179-SB-DUP01, B179-SB-DUP02

The positive cadmium and molybdenum results below the blank action level and above the LOD are changed to non-detected values (U) due to laboratory blank contamination. Results below the blank action level and below the LOD are changed to non-detected values (U) at the sample-specific LOD.

Although cadmium and molybdenum were found in the laboratory blanks, the project sensitivity goals are not impacted since the affected sample results are lower than the project action limits. The cadmium and molybdenum results in the affected samples are usable as non-detected values.

ICP Interference Check Sample Results

The following results were qualified in the affected samples due to ICP interference attributed to the high concentration of iron in the samples:

Analyte	Action		Bias	Affected Samples
	(+)	ND		
Cadmium	J		High	B179-SB1-0001, B179-SB-DUP02
	UJ			B179-SB2-0709, B179-SB3-0709

Analyte	Action		Bias	Affected Samples
	(+)	ND		
Molybdenum	J		Low	B179-SB1-0001, B179-SB1-0507, B179-SB2-0709, B179-SB3-0709, B179-SB-DUP02
Silver	J	UJ	Low	B179-SB1-0001, B179-SB1-0507, B179-SB2-0709, B179-SB3-0709, B179-SB-DUP02

The positive results for cadmium in the affected samples are qualified as estimated (J) due to positive ICP interference attributed to iron. These results may be biased high.

The positive molybdenum results are qualified as estimated (J) in the affected samples due to negative ICP interference attributed to iron. The positive and non-detected silver results are qualified as estimated (J, UJ) in the affected samples due to negative ICP interference attributed to iron. These results may be biased low.

Professional judgment was used to change the positive cadmium results to estimated, non-detected values (UJ) in the affected samples because the reported concentrations may be due entirely (≥90%) to positive iron ICP interference. The results may be false positive.

Although there were positive ICP interferences attributed to the high concentration of iron that resulted in estimating the positive results for cadmium in the samples listed above, the project accuracy goals are not impacted since the affected sample results are much lower than the project action limit. The positive results for cadmium in the affected samples are usable as estimated values which may be biased high.

There were negative ICP interferences attributed to the high concentration of iron that resulted in estimating the results for molybdenum in the samples listed above; therefore, the project accuracy goals may be slightly impacted. The positive molybdenum results in the affected samples are usable as estimated values which may be biased low.

Although there were negative ICP interferences attributed to the high concentration of iron that resulted in estimating the results for silver in the samples listed above, the project accuracy goals are not impacted since the affected sample results are much lower than the project action limit. The positive and non-detected silver results in the affected samples are usable as estimated values and estimated reporting limits which may be biased low.

Although there were positive ICP interferences attributed to the high concentration of iron that resulted in changing the positive cadmium results to estimated, non-detected values in the samples listed above, the project sensitivity goals are not impacted since the affected sample results are much lower than the project action limit. The cadmium results in the affected samples are usable as estimated, non-detected values which may be false positive.

Matrix Spike

The following table summarizes the analytes that recovered outside of the 75-125% recovery limits in the matrix spike (MS) analysis of the sample B179-SB2-0001:

Analyte	MS %Recovery	Action	
		(+)	NDs
Antimony	50.9		UJ
Potassium	38.3	J	

The non-detected antimony results are estimated (UJ) in all samples due to a low MS recovery. The positive potassium results are estimated (J) in all samples due to a low MS recovery.

Although the percent recovery criteria were not met for antimony and potassium, the project accuracy goals are not impacted since the affected antimony results are much lower than the project action limit and there are no project action limits established for potassium for the soil samples. The non-detected antimony results in all samples are usable as estimated reporting limits which may be biased low. The positive potassium results in all samples are usable as estimated values which may be biased low.

Laboratory Duplicate Results

The following table summarizes the analyte which was outside the 35% RPD QC limit in the analysis of the laboratory duplicate of sample B179-SB2-0001:

Analyte	RPD	Action	
		(+)	NDs
Aluminum	42.8	J	
Arsenic	128.1	J	
Barium	49.4	J	
Magnesium	43.7	J	
Potassium	53.7	J	
Thallium	158.8	J	

The positive aluminum, arsenic, barium, magnesium, potassium, and thallium results are estimated (J) in all soil samples due to poor laboratory duplicate precision.

Although the results of the laboratory duplicate analysis exceeded the QC limits for magnesium and potassium, the project precision goals are not impacted since there are no project action limits established for magnesium and potassium for the soil samples. The positive magnesium and potassium results in all soil samples are usable as estimated values for which the bias is indeterminate.

Although the results of the laboratory duplicate analysis exceeded the QC limits for barium and thallium, the project precision goals are not impacted since the affected sample results are much lower than the project action limits. The positive barium and thallium results in all soil samples are usable as estimated values for which the bias is indeterminate.

The results of the laboratory duplicate analysis exceeded the QC limits for aluminum and arsenic; therefore, the project precision goals may be impacted. The positive aluminum and arsenic results in all soil samples are usable as estimated values for which the bias is indeterminate.

Field Duplicate Precision

The following table summarizes the analyte that recovered outside of the 50% RPD QC limit in the analysis of the field duplicate pair B179-SB3-0001/B179-SB-DUP01:

Analyte	Sample Result	Duplicate Result	RPD	Action	
	mg/kg	mg/kg		(+)	NDs
Calcium	1900	3260	52.7	J	

The positive calcium results are estimated (J) in all samples except for samples B179-SB1-0001 and B179-SB-DUP02 due to poor field duplicate precision. Samples B179-SB1-0001 and B179-SB-DUP02 have good field duplicate precision for calcium.

Although the results of the field duplicate analysis exceeded the QC limits for calcium, the project precision goals are not impacted since there are no project action limits established for calcium for the soil samples. The positive calcium results in affected samples are usable as estimated values for which the bias is indeterminate.

ICP Serial Dilution Results

The following table summarizes the results in the ICP serial dilution analysis of sample B179-SB2-0001 for which the percent difference between the initial and diluted results was above the 10% QC criterion when the initial sample result was above 50 times the method detection limit (MDL):

Analyte	% Difference	Bias	Action	
			(+)	NDs
Beryllium	12.4	Low	J	

The positive beryllium results are estimated (J) in all soil samples. Since the initial sample result was lower than the diluted result, the affected sample results may be biased low.

A sample matrix suppressing effect for beryllium was detected in the ICP serial dilution analysis; therefore, the project accuracy goals may be impacted. The positive beryllium results in the soil samples are usable as estimated values which may be biased low.

Reporting Limits

Non-detected metal results were reported to the limit of detection (LOD). Positive results below the limit of quantitation (LOQ) and above the method detection limit (MDL) were qualified as estimated (J) due to uncertainty below the LOQ.

All project quantitation limit (PQL) goals were met by the adjusted LOQs except for arsenic, calcium, and magnesium. All project action limits (PALs) were met by the adjusted LOQs except for arsenic, beryllium, chromium, and vanadium. However, all PALs were met by the adjusted LODs.

As discussed in the Laboratory Blanks section, select positive cadmium and molybdenum results were changed to non-detect or non-detect at the LOD due to laboratory blank contamination. Data usability is not impacted.

Select positive cadmium results were changed to non-detected, estimated values in select samples due to ICP interferences. As discussed above in the ICP Interference Check Sample Results section, data usability is not impacted.

Data Usability Assessment

The data usability assessment was performed to determine if the data met the project data quality objectives for acceptable accuracy, precision, sensitivity, and completeness; and to determine and define the impact of the exceeded quality control indicators on the technical usability of the data. Please refer to the specific sections in the above validation report for further details.

The project goals with respect to accuracy were met for the metals data set with the following exceptions. Molybdenum was qualified as estimated in select samples due to negative ICP interferences; the affected results may be biased low. Beryllium was qualified as estimated in all soil samples due to a sample matrix suppressing effect detected in the ICP serial dilution analysis; the affected results may be biased low. Although specific method criteria were not met in these instances, the affected positive results are usable as estimated values which may have a minor impact on data usability. In addition, cadmium was qualified as estimated in select samples due to positive ICP interferences. Silver was qualified as estimated in select samples due to negative ICP interferences. Antimony and potassium were qualified as estimated in all soil samples due to low MS recoveries. Although specific method criteria were not met in these instances, data usability was not impacted and the affected positive and non-detected results are usable as estimated values and estimated reporting limits.

The project goals with respect to precision were met for the metals data set with the following exception. Aluminum and arsenic were qualified as estimated in all soil samples due to poor laboratory duplicate precision. Although specific method criteria were not met in these instances, the affected positive results are usable as estimated values which may have a minor impact on data usability. In addition, magnesium, potassium, barium, and thallium were qualified as estimated in all soil samples due to poor laboratory duplicate precision. Calcium was qualified as estimated in affected samples due to poor field duplicate precision. Although specific method criteria were not met in these instances, data usability was not impacted and the affected positive results are usable as estimated values.

The project goals with respect to sensitivity were met for the metals data set with the following exceptions. All project quantitation limit (PQL) goals were met by the adjusted LOQs except for arsenic, calcium, and magnesium. All project action limits (PALs) were met by the adjusted LOQs except for arsenic, beryllium, chromium, and vanadium. However, all PALs were met by the adjusted LODs.

The project goals with respect to completeness were met for the metals data set. Data usability is not impacted with regards to completeness.

Tables: Data Summary Tables
Data Validation Qualifiers and Codes

Enclosures: Data Validation Worksheets

Data Validation Qualifiers and Codes

Data Validation Qualifiers:

= No qualifier attached to value (positive hit)
J = Value is estimated
U = Value is not detected
UJ = Value is not detected and estimated
R = Value (positive hit) is not usable
UR = Value was reported as ND but is not usable

Qualifier Codes:

A = Lab Blank Contamination
B = Field Blank Contamination
C = Calibration Noncompliance (e.g. % RSDs, %Ds, ICVs, CCVs, RRFs, etc.)
C01 = GC/MS Tuning Noncompliance
D = MS/MSD Recovery Noncompliance
E = LCS/LCSD Recovery Noncompliance
F = Lab Duplicate Imprecision
G = Field Duplicate Imprecision
H = Holding Time Exceedance
I = ICP Serial Dilution Noncompliance
J = GFAA PDS - GFAA MSA's $r < 0.995$
K = ICP Interference - includes ICS % R Noncompliance
L = Instrument Calibration Range Exceedance
M = Sample Preservation Noncompliance
N = Internal Standard Noncompliance
N01 = Internal Standard Recovery Noncompliance Dioxins
N02 = Recovery Standard Noncompliance Dioxins
N03 = Clean-up Standard Noncompliance Dioxins
O = Poor Instrument Performance (e.g. base-line drifting)
P = Uncertainty below quantitation limit (< QL but ≥ MDL)
Q = Other problems (can encompass a number of issues; e.g. chromatography,interferences, etc.)
R = Surrogates Recovery Noncompliance
S = Pesticide/PCB Resolution
T = % Breakdown Noncompliance for DDT and Endrin
U = % Difference between columns/detectors >25% for positive results determined via GC/HPLC
V = Non-linear calibrations; correlation coefficient $r < 0.995$
W = EMPC result
X = Signal to noise response drop
Y = Percent solids <30%
Z = Uncertainty at 2 sigma deviation is greater than sample activity

PROJ_NO: 02124	NSAMPLE	B179-SB1-0001			B179-SB1-0507			B179-SB2-0001			B179-SB2-0709		
SDG: WE19-7	LAB_ID	SD4698-001			SD4698-003			SD4698-007			SD4698-009		
FRACTION: M	SAMP_DATE	7/27/2010			7/27/2010			7/27/2010			7/27/2010		
MEDIA: SOIL	QC_TYPE	NM			NM			NM			NM		
	UNITS	MG/KG			MG/KG			MG/KG			MG/KG		
	PCT_SOLIDS	92.8			84.6			83.2			90.8		
	DUP_OF												
PARAMETER		RESULT	VQL	QLCD	RESULT	VQL	QLCD	RESULT	VQL	QLCD	RESULT	VQL	QLCD
ALUMINUM		8260	J	F	8230	J	F	4330	J	F	9120	J	F
ANTIMONY		0.4	UJ	D	0.48	UJ	D	0.45	UJ	D	0.69	UJ	D
ARSENIC		6.1	J	F	4.4	J	F	0.53	J	F	4.4	J	F
BARIUM		33.3	J	F	23.3	J	F	33.1	J	F	29.8	J	F
BERYLLIUM		0.42	J	I	0.38	J	IP	0.26	J	IP	0.3	J	IP
CADMIUM		1.2			0.048	U		0.045	U		0.069	UJ	AKP
CALCIUM		1510			1540	J	G	2380	J	G	2040	J	G
CHROMIUM		23.1			10.9			3.3			16.1		
COBALT		7.2			10.6			1.9	J	P	7.9		
COPPER		20.9			9.3			2.6			12.6		
IRON		17500			13300			7880			20000		
LEAD		47.7			7			3.2			7.5		
MAGNESIUM		2260	J	F	2120	J	F	1860	J	F	3330	J	F
MANGANESE		384			155			273			312		
MERCURY		1			0.019	U		0.016	U		0.017	U	
MOLYBDENUM		1.9	J	K	0.76	UJ	AKP	0.72	UJ	AP	1.5	J	K
NICKEL		17.6			13.6			2	J	P	15.3		
POTASSIUM		655	J	DF	464	J	DF	1510	J	DF	1200	J	DF
SELENIUM		0.56	U		0.67	U		0.63	U		0.72	J	P
SILVER		0.46	J	KP	0.48	J	KP	0.34	J	P	0.55	UJ	K
SODIUM		326			172			61	J	P	112		
THALLIUM		0.05	J	FP	0.05	J	FP	0.1	J	FP	0.09	J	FP
VANADIUM		14.4			20.2			9.2			15.1		
ZINC		121			32.5			25.5			42.4		

PROJ_NO: 02124	NSAMPLE	B179-SB3-0001			B179-SB3-0709			B179-SB-DUP01			B179-SB-DUP02		
SDG: WE19-7	LAB_ID	SD4698-011			SD4698-013			SD4698-015			SD4698-005		
FRACTION: M	SAMP_DATE	7/27/2010			7/27/2010			7/27/2010			7/27/2010		
MEDIA: SOIL	QC_TYPE	NM			NM			FD			FD		
	UNITS	MG/KG			MG/KG			MG/KG			MG/KG		
	PCT_SOLIDS	96.8			90.7			95.5			88.1		
	DUP_OF							B179-SB3-0001			B179-SB1-0001		
PARAMETER		RESULT	VQL	QLCD	RESULT	VQL	QLCD	RESULT	VQL	QLCD	RESULT	VQL	QLCD
ALUMINUM		2890	J	F	12300	J	F	3680	J	F	8160	J	F
ANTIMONY		0.42	UJ	D	1	UJ	D	0.4	UJ	D	0.42	UJ	D
ARSENIC		0.47	J	F	19.1	J	F	1.2	J	F	3.9	J	F
BARIUM		18.9	J	F	24.3	J	F	22.1	J	F	30.8	J	F
BERYLLIUM		0.2	J	IP	0.38	J	I	0.21	J	IP	0.36	J	IP
CADMIUM		0.09	UJ	AP	0.1	UJ	AKP	0.08	UJ	AP	0.61	J	KP
CALCIUM		1900	J	G	1310	J	G	3260	J	G	1520		
CHROMIUM		4.2			18.1			6.8			14.3		
COBALT		1.6	J	P	15			2.4			6.1		
COPPER		4.3			26.5			4.4			16.8		
IRON		6330			37400			7650			15700		
LEAD		4.7			11.4			4.4			36.9		
MAGNESIUM		1210	J	F	4290	J	F	1560	J	F	2440	J	F
MANGANESE		225			606			268			264		
MERCURY		0.016	U		0.018	U		0.018	U		1.5		
MOLYBDENUM		0.67	UJ	AP	1.7	UJ	AKP	0.63	UJ	AP	0.67	UJ	AKP
NICKEL		3.1	J	P	26			8.4			12.2		
POTASSIUM		782	J	DF	676	J	DF	856	J	DF	672	J	DF
SELENIUM		0.58	U		1.9	J	P	0.56	U		0.59	U	
SILVER		0.28	J	P	0.83	UJ	K	0.26	J	P	0.46	J	KP
SODIUM		48.3	J	P	107			46.7	J	P	181		
THALLIUM		0.05	J	FP	0.08	J	FP	0.05	J	FP	0.05	J	FP
VANADIUM		5.7			19			5.5			14.3		
ZINC		31.8			62.7			35.5			83.8		

TETRA TECH

INTERNAL CORRESPONDENCE

C-NAVY-09-10-3877W

Date: September 30, 2009

c: File G02124-4.10 (w/enc.-original)
D. Seiken (w/o enc.)

To: J. Forrelli (w/o enc.)

From: J. Cardinal (no copy) JC (for)

Subject: Tier II Organic Data Validation, SDG WE19-7
Katahdin Analytical Services
CTO WE19, Site 08 – NUSC Disposal Area, Naval Station Newport, Middletown, RI

VOC/SVOC/PAH/Pesticide/PCB:

8/Soils/	B179-SB1-0001	B179-SB1-0507
	B179-SB2-0001	B179-SB2-0709
	B179-SB3-0001	B179-SB3-0709
	B179-SB-DUP01	B179-SB-DUP02

(Field duplicate pairs: B179-SB3-0001/B179-SB-DUP01, B179-SB1-0001/B179-SB-DUP02)

VOC:

1/Trip blank/	TB-SB-072710

Tetra Tech NUS, Inc. (TtNUS) performed a Tier II data validation on the volatile organic compound (VOC), semivolatile organic compound (SVOC), polycyclic aromatic hydrocarbon (PAH), pesticide, and polychlorinated biphenyl (PCB) analytical data for the soil samples collected at Site 08 at the Naval Undersea System Center (NUSC) Disposal Area, Naval Station Newport, Middletown, Rhode Island site on July 27, 2010. Sample analysis was performed according to the Work Plan for Remedial Investigation Revision 2 for Site 08 – NUSC Disposal Area, Naval Station Newport, Middletown, Rhode Island dated January 2007 and Addendum dated June 2010.

The VOC and SVOC analyses were performed according to USEPA SW-846 Methods 8260B and 8270C, respectively. PAHs were analyzed by Method 8270C in the selective ion monitoring (SIM) mode. (In this report, PAHs are included under SVOC-SIM.) The pesticides and PCB analyses were performed according to USEPA SW-846 Methods 8081 and 8082, respectively.

The VOC, SVOC, and PAH data validation was performed in accordance with the Region I EPA-NE Data Validation Functional Guidelines for Evaluating Environmental Analyses, December 1996. The pesticides and PCB validation was performed in accordance with the Region I, EPA-NE Data Validation Functional Guidelines for Evaluating Organic Analyses, Part III, February 2004.

The sample results, validation qualifiers (VQL), and qualifier codes (QLCD) are presented in the enclosed data summary tables. A list of the qualifier codes, which provide the reasons for the validation qualifiers, is enclosed.

The data were evaluated based on the following parameters:

- Data Completeness
- Preservation and Technical Holding Times

* • GC/MS Instrument Performance Check (Tuning)
* • Pesticide Degradation
• Initial and Continuing Calibrations
• Blanks
• Surrogate Compounds
• Internal Standards
• Matrix Spike/Matrix Spike Duplicate
• Laboratory Control Sample/Laboratory Control Sample Duplicate
• Field Duplicates
• Analyte Identification/Quantitation
* • Percent Solids
• Reporting Limits

* All criteria were met for this parameter.

Data Completeness

The laboratory noted that select samples were received two days later than the rest of the shipment. Mistakenly some samples were went to APPL laboratory first.

Volatiles

The laboratory noted that the concentrations of detected compounds in the initial analysis and reanalysis of sample B179-SB1-0507 did not match well. This may be due to sample heterogeneity.

Pesticides

The laboratory noted that the analyte hexachlorobenzene coelutes with alpha-BHC on Channel B, but the two analytes are resolved on Channel A. Therefore, these analytes are quantitated using the results from Channel A for the LCS/LCSD and MS/MSD.

On September 23, 2010 the laboratory clarified that the extraction date listed on select pesticide Form Is was not correct due to software error. On September 27, 2010 the laboratory resubmitted the affected forms with the correct extraction dates.

Initial and Continuing Calibrations

Volatiles

The following table summarizes the volatile compound that failed to meet the CC criterion of %D < 25:

Compound	%D	Action		Affected Samples
		(+)	NDs	
Bromomethane	39.01, 30.44		UJ	All soil samples and TB-SB-072710

Although the %D was outside of the QC limit for bromomethane, the project accuracy goals are not impacted since there are no project action limits established for bromomethane for the soil samples. The non-detected bromomethane results for the affected samples are usable as estimated reporting limits.

Semivolatiles - SIM

The following table summarizes the PAH compound that failed to meet the CC criterion of %D < 25:

Compound	%D	Action		Affected Samples
		(+)	NDs	
2-Methylnaphthalene	46.10	J		B179-SB-DUP01RA

Although the %D was outside of the QC limit for 2-methylnaphthalene, the project accuracy goals are not impacted since the affected sample result is much lower than the project action limit. The positive 2-methylnaphthalene result for the affected sample is usable as an estimated value.

Blanks

Volatiles

The following table summarizes the level of blank contamination detected in the laboratory blank associated with the samples.

Compound	Type of Blank	Maximum Conc. (µg/Kg)	Action Level (µg/Kg)	Affected Samples
Acetone	Method	11	110	B179-SB1-0507, B179-SB2-0001, B179-SB2-0709RA, B179-SB3-0709 TB-SB-072710

Blank actions were applied to the affected samples due to acetone method blank contamination. The 10x rule applies for this volatile compound. The positive results for acetone in the affected samples were changed to non-detected values.

Although acetone contamination was found in the laboratory method blank, the project sensitivity goals are not impacted since the non-detected values do not exceed the project action limit for acetone. The results in the affected samples are usable as non-detected values.

Surrogate Compounds

Volatiles

The following samples had surrogate spike recoveries outside of the recovery limits:

Sample	Surrogate	% Recovery	QC Limits	Action	
				(+)	NDs
B179-SB1-0507	1,2-Dichloroethane-d4	137	58-134	J	
	Toluene-d8	123	67-118		
B179-SB2-0001	1,2-Dichloroethane-d4	141	58-134	J	
B179-SB3-0709	1,2-Dichloroethane-d4	145	58-134	J	
	Toluene-d8	119	67-118		
B179-SB1-0001RA	1,2-Dichloroethane-d4	144	58-134	J	

Sample	Surrogate	% Recovery	QC Limits	Action	
				(+)	NDs
B179-SB-DUP02RA	1,2-Dichloroethane-d4	144	58-134	J	
B179-SB2-0709RA	1,2-Dichloroethane-d4	144	58-134	J	
	Toluene-d8	120	67-118		
B179-SB3-0001RA	1,2-Dichloroethane-d4	145	58-134	J	
TB-SB-072710	Dibromofluoromethane	136	64-130	J	
	1,2-Dichloroethane-d4	158	58-134		
	Toluene-d8	133	67-118		
	p-Bromofluorobenzene	133	47-119		
B179-SB-DUP01RA	1,2-Dichloroethane-d4	146	58-134	J	

The surrogates dibromofluoromethane, 1,2-dichloroethane-d4, toluene-d8, and p-bromofluorobenzene recovered above the QC limits in the samples listed above. All positive VOC results are estimated (J) in the affected sample due to high surrogate recoveries.

Although the surrogate recovery QC criteria were not met for dibromofluoromethane, 1,2-dichloroethane-d4, toluene-d8, and p-bromofluorobenzene, the project accuracy goals are not impacted since the affected sample results are much lower than the project action limits and there are no project action limits established for the trip blank sample. The positive results the affected samples are usable as estimated values which may be biased high.

Internal Standards

Volatiles

The following table summarizes the volatile internal standard that failed to meet the acceptance criteria:

Internal Standard	IS Area	Acceptable Range	Action		Affected Samples
			(+)	NDs	
1,4-Dichlorobenzene-d4	438046	554169-2216676		UJ	B179-SB1-0001RA
	445223			UJ	B179-SB-DUP02RA

The internal standard areas of 1,4-dichlorobenzene-d4 failed to meet the acceptable range for the samples listed above. All non-detected results for the associated compounds are estimated (UJ) in the affected samples due to poor internal standard performance.

The target compounds associated with 1,4-dichlorobenzene-d4 are 1,1,2,2-tetrachloroethane, 1,2,3-trichloropropane, isopropylbenzene, bromobenzene, 2-chlorotoluene, 4-chlorotoluene, 1,3,5-trimethylbenzene, tert-butylbenzene, 1,2,4-trimethylbenzene, sec-butylbenzene, 1,3-dichlorobenzene, 4-isopropyltoluene, 1,4-dichlorobenzene, 1,2-dichlorobenzene, n-propylbenzene, 1,2-dibromo-3-chloropropane, 1,2,4-trichlorobenzene, hexachlorobutadiene, 1,2,3-trichlorobenzene, and n-butylbenzene.

Although the QC criteria were not met for the internal standard areas of 1,4-dichlorobenzene-d4 for the above samples, the project accuracy goals are not impacted since the affected sample results are below the project action limits, or there are no project action limits established for the affected compounds. The non-detected results in the affected samples are usable as estimated reporting limits.

Semivolatiles - SIM

The following table summarizes the semivolatile-SIM internal standards that failed to meet the acceptance criteria:

Internal Standard	IS Area	Acceptable Range	Action		Affected Samples
			(+)	NDs	
Chrysene-d12	30308	35267-141068	J		B179-SB-DUP01*
Chrysene-d12	31908	35267-141068	J		B179-SB-DUP01RA**
Perylene-d12	18883	22809-91234			

*Only pyrene is reported from this sample. Pyrene is estimated due to the chrysene-d12 non-compliance.
**All compounds except pyrene are reported from this sample.

The internal standard areas of chrysene-d12 and perylene-d12 failed to meet the acceptable range for the samples listed above. All positive results for the associated reported compounds are estimated (J) in the affected samples due to poor internal standard performance.

The target compounds associated with chrysene-d12 are pyrene, benzo(a)anthracene, and chrysene. The target compounds associated with perylene-d12 are benzo(b)fluoranthene, benzo(k)fluoranthene, benzo(a)pyrene, indeno(1,2,3-cd)pyrene, dibenzo(a,h)anthracene, and benzo(g,h,i)perylene.

The QC criteria were not met for the internal standard areas of chrysene-d12 and perylene-d12 for the above samples; therefore, the project accuracy goals for the associated compounds may be impacted. The positive results for the associated compounds in the affected samples are usable as estimated values.

Matrix Spike/Matrix Spike Duplicate

Volatiles

The following table summarizes the results of the matrix spike and/or matrix spike duplicate (MS/MSD) analysis of sample B179-SB2-0001 that were outside of the QC limits:

Compound	RPD	RPD QC Limit	MS/MSD % Recovery	% Recovery QC Limits	Action	
					(+)	NDs
Acetone	-	-	173 / 182	20-160	J	
2-Butanone	-	-	172 / 195	30-135	J	
Hexachlorobutadiene	37	30	-	-		UJ

-Criterion met

Although the MS/MSD recoveries for acetone and 2-butanone were above the QC limits, the project accuracy goals are not impacted since the affected sample results are much lower than the project action limits. The positive acetone and 2-butanone results in sample B179-SB2-0001 are usable as estimated values which may be biased high.

Although the relative percent difference (RPD) for hexachlorobutadiene was outside of the QC limit, the project precision goals are not impacted since there are no project action limits established for hexachlorobutadiene for the soil samples. The non-detected hexachlorobutadiene result in sample B179-SB2-0001 is usable as an estimated reporting limit for which the bias is indeterminate.

Semivolatiles – Full Scan

The following table summarizes the results of the matrix spike and/or matrix spike duplicate (MS/MSD) analysis of sample B179-SB2-0001 that were outside of the QC limits:

Compound	RPD	RPD QC Limit	MS/MSD % Recovery	% Recovery QC Limits	Action	
					(+)	NDs
Benzoic acid	200	30	20.8 / 0	40-100		UR
Benzidine	-	-	0 / 0	10-100		UR

-Criterion met

The matrix spike/matrix spike duplicate results for sample B179-SB2-0001 recovered very low or did not recover for benzoic acid and benzidine. The non-detected benzoic acid and benzidine results are rejected (UR) in sample B179-SB2-0001 due to no or low MS/MSD recovery. These results should not be used for project decisions and the data completeness goals may be impacted.

Semivolatiles - SIM

The following table summarizes the results of the matrix spike and/or matrix spike duplicate (MS/MSD) analysis of sample B179-SB2-0001 that were outside of the QC limits:

Compound	MS/MSD % Recovery	% Recovery QC Limits	Action	
			(+)	NDs
Fluoranthene	56.5 / 56.1	68-126	J	

Although the MS/MSD recoveries for fluoranthene were below the QC limits, the project accuracy goals are not impacted since the affected sample result is much lower than the project action limit. The positive fluoranthene result in sample B179-SB2-0001 is usable as an estimated value which may be biased low.

Laboratory Control Sample/Laboratory Control Sample Duplicates

Volatiles

The following table summarizes the compounds that failed to meet the statistically derived laboratory control sample (LCS) recovery QC limits:

Compound	LCS % Rec.	QC Limits	Action		Affected Samples
			(+)	NDs	
Bromochloromethane	81.4	84-115		UJ	All samples except TB-SB-072710 and B179-SB-DUP01RA
Dibromomethane	83.8	85-118		UJ	
Chlorobenzene	84.4	85-111		UJ	
2-Butanone	76.4	78-148	J	UJ	TB-SB-072710 and B179-SB-DUP01RA
4-Methyl-2-pentanone	73.8	75-137		UJ	
1,2-Dibromoethane	79.4	81-119		UJ	
2-Hexanone	61.6	72-149		UJ	

Although the LCS recovery criteria were not met for bromochloromethane, dibromomethane, chlorobenzene, 2-butanone, 4-methyl-2-pentanone, 1,2-dibromoethane, and 2-hexanone; the project accuracy goals are not impacted since either the affected sample results are much lower than the project action limits, there are no project action limits established for the affected compounds, or there are no project action limits established for the trip blank sample. The positive and non-detected bromochloromethane, dibromomethane, chlorobenzene, 2-butanone, 4-methyl-2-pentanone, 1,2-dibromoethane, and 2-hexanone results in the affected samples are usable as estimated values and estimated reporting limits which may be biased low.

Semivolatiles – Full Scan

The following table summarizes the compounds that failed to meet the statistically derived laboratory control sample/laboratory control sample duplicate (LCS/LCSD) recovery QC limits:

Compound	LCS/LCSD % Rec.	QC Limits	Action		Affected Samples
			(+)	NDs	
Benzoic acid	0 / 0	40-100		UR	All samples
Benzidine	0 / 0	10-100		UR	

The LCS/LCSD did not recover benzoic acid and benzidine. The non-detected benzoic acid and benzidine results are rejected (UR) in all samples due to no LCS/LCSD recoveries. These results should not be used for project decisions and the data completeness goals may be impacted.

Semivolatiles - SIM

The following table summarizes the compounds that failed to meet the statistically derived laboratory control sample/laboratory control sample duplicate (LCS/LCSD) recovery QC limits:

Compound	LCS/LCSD % Rec.	QC Limits	Action		Affected Samples
			(+)	NDs	
Fluorene	- / 60.3	61-103	J	UJ	All samples

-Criterion met

Although the LCS/LCSD recovery criteria were not met for fluorene; the project accuracy goals are not impacted since the affected sample results are much lower than the project action limit. The positive and non-detected fluorene results in the affected samples are usable as estimated values and estimated reporting limits which may be biased low.

Field Duplicates

Semivolatiles – Full Scan

The field duplicate pair B179-SB1-0001/B179-SB-DUP02 exceeded the relative percent difference QC criterion of 50% for the following compound:

Analyte	Sample Result (µg/kg)	Duplicate Result (µg/kg)	RPD	Action	
				(+)	NDs
Di-n-butylphthalate	120 J	480	120	J	

J – Estimated value

Although the field duplicate relative percent difference (RPD) for di-n-butylphthalate exceeded the QC criterion; the project precision goals are not impacted since the affected sample results are much lower than the project action limit. The positive di-n-butylphthalate results in samples B179-SB1-0001 and B179-SB-DUP02 are usable as estimated values for which the bias is indeterminate.

Semivolatiles – SIM

The field duplicate pair B179-SB1-0001/B179-SB-DUP02 exceeded the relative percent difference QC criterion of 50% for the following compounds:

Analyte	Sample Result (µg/kg)	Duplicate Result (µg/kg)	RPD	Action	
				(+)	NDs
2-Methylnaphthalene	210	490	80	J	
Benzo(a)anthracene	2600	4600	56	J	
Benzo(a)pyrene	1800	3300	59	J	
Benzo(b)fluoranthene	2700	4800	56	J	
Benzo(g,h,i)perylene	1000	1700	52	J	
Chrysene	2400	4300	57	J	
Dibenzo(a,h)anthracene	270	620 J	79	J	
Fluoranthene	4500	9200	69	J	
Phenanthrene	5700	12000	71	J	
Pyrene	4500	7800	54	J	

J – Estimated value

The field duplicate relative percent differences (RPD) for benzo(a)anthracene, benzo(a)pyrene, benzo(b)fluoranthene, benzo(g,h,i)perylene, chrysene, dibenzo(a,h)anthracene, fluoranthene, phenanthrene, and pyrene exceeded the QC criterion; therefore, the project precision goals may be impacted. The positive benzo(a)anthracene, benzo(a)pyrene, benzo(b)fluoranthene, benzo(g,h,i)perylene, chrysene, dibenzo(a,h)anthracene, fluoranthene, phenanthrene, and pyrene results in samples B179-SB1-0001 and B179-SB-DUP02 are usable as estimated values for which the bias is indeterminate.

Although the field duplicate relative percent difference (RPD) for 2-methylnaphthalene exceeded the QC criterion, the project precision goals are not impacted since the affected sample results are much lower than the project action limit. The positive 2-methylnapthalene results in samples B179-SB1-0001 and B179-SB-DUP02 are usable as estimated values for which the bias is indeterminate.

Pesticides

The field duplicate pair B179-SB1-0001/B179-SB-DUP02 did not meet the QC criterion for the following compound:

Analyte	Sample Result (µg/kg)	Duplicate Result (µg/kg)	RPD	Action	
				(+)	NDs
Gamma-BHC	ND	17	NC	J	UJ

ND – Value is not detected.
NC – RPD is not calculated.

The gamma-BHC results in samples B179-SB1-0001 and B179-SB-DUP02 did not meet the QC criterion since the sample result was not detected (0.88 ug/L) while the duplicate result was greater than 2x the LOQ (LOQ = 1.8 µg/kg).

Although the field duplicate relative percent difference for gamma-BHC exceeded the QC criterion; the project precision goals are not impacted since there are no project action limits established for gamma-BHC for the soil samples. The positive and non-detected gamma-BHC results in samples B179-SB1-0001 and B179-SB-DUP02 are usable as estimated values and estimated reporting limits for which the bias is indeterminate.

Analyte Identification/Quantitation

Pesticides

The %RPD between the results of analytical columns 1 and 2 exceeded the 40% RPD QC criterion for the compounds in the following samples:

Sample	Analyte	%RPD	Action (+)
B179-SB1-0001	4,4'-DDT	136	UJ* at 5.33
B179-SB1-0507	4,4'-DDD	44	J
	Endosulfan II	64	J
	4,4'-DDT	108	UJ* at 1.89
B179-SB-DUP02	4,4'-DDE	98	J
	4,4'-DDT	131	UJ* at 5.72
B179-SB3-0001	4,4'-DDE	43	J
	Dieldrin	82	J
B179-SB-DUP01	Dieldrin	81	J
	4,4'-DDT	62	J

*Professional judgment was used to report the positive result as an estimated, non-detected (UJ) value.

Although the analyte quantitation relative percent differences (RPD) exceeded the 40% QC limit for 4,4'-DDT, 4,4'-DDD, endosulfan II, and 4,4'-DDE; the samples listed above; the project accuracy goals are not impacted since either the affected sample results are much lower than the project action limits or there are no project action limits established for the affected compounds. The positive 4,4'-DDT, 4,4'-DDD, endosulfan II, and 4,4'-DDE results in the affected compounds are usable as estimated values.

The analyte quantitation RPD exceeded the 40% QC limit for dieldrin; therefore, the project accuracy may be affected due to analytical interferences detected in the dual column analysis. The positive dieldrin results in the affected samples are usable as estimated values.

Although the analyte quantitation relative percent differences exceeded the 100% RPD QC limit for 4,4'-DDT for the samples listed above and professional judgment was applied to report the positive result as a estimated non-detected value, the project sensitivity goals are not impacted since the affected sample results are much lower than the project action limit. The estimated, non-detected values for the 4,4'-DDT in the affected samples are usable as estimated quantitation limits.

Reporting Limits

Non-detected results were reported to the limit of detection (LOD). Positive results below the limit of quantitation (LOQ) and above the method detection limit (MDL) were qualified as estimated (J) due to uncertainty below the LOQ.

Volatiles

For select samples, the project quantitation limit (PQL) goals were not met by the adjusted LOQs due to percent moisture of the samples. All project action limits (PALs) were met by the adjusted LOQs except for vinyl chloride. However, all PALs were met by the adjusted LODs (reporting limits).

Although acetone contamination was found in the laboratory method blank, data usability is not impacted since the non-detected values do not exceed the project action limit for acetone.

Semivolatiles – Full Scan

For select samples, the PQL goals were not met by the adjusted LOQs due to percent moisture of the samples. All PALs were met by the adjusted LOQs and LODs except for bis(2-ethylhexyl)phthalate and diethylphthalate as highlighted in the analytical specification. Data usability may be impacted for these compounds.

Semivolatiles – SIM

For select samples, the PQL goals were not met by the adjusted LOQs due to percent moisture of the samples. However, all PALs were met by the adjusted LOQs and LODs.

Pesticides

For select samples, the PQL goals were not met by the adjusted LOQs due to percent moisture of the samples. All PALs were met by the adjusted LOQs and LODs except alpha-chlordane, dieldrin, and gamma-chlordane as highlighted in the analytical specification. Data usability may be impacted for these compounds.

The sample reporting limit was elevated as a result of data validation action due to analyte RPDs exceeding the 100% RPD QC limit for 4,4'-DDT in select samples. Data usability is not impacted since the non-detected values are much lower than the project action limit.

PCBs

For select samples, the PQL goals were not met by the adjusted LOQs due to percent moisture of the samples. However, all PALS were met by the adjusted LOQs and LODs.

Volatiles / Semivolatiles – Full Scan

1,2,4-Trichlorobenzene, 1,2-dichlorobenzene, 1,3-dichlorobenzene, and 1,4-dichlorobenzene were reported by both Methods 8260B and 8270C. Results from Method 8260B were selected for reporting since this method provides a lower LOD.

Semivolatiles – Full Scan / Pesticides

Hexachlorobenzene was reported by both Methods 8270C and 8081. Results from 8081 were selected for reporting since this method provides a lower LOD.

Data Usability Assessment

The data usability assessment was performed to determine if the data met the project data quality objectives for acceptable accuracy, precision, sensitivity, and completeness; and to determine and define the impact of the exceeded quality control indicators on the technical usability of the data. Please refer to the specific sections in the above validation report for further details.

Volatiles

The project goals with respect to accuracy were met for the volatiles data set. Bromomethane was qualified as estimated in select samples due to instrument calibration variability. The positive results in select samples were qualified as estimated due to high surrogate recoveries. Several compounds were qualified as estimated in select samples due to poor internal standard performance. Acetone and 2-butanone were qualified as estimated in sample B179-SB2-0001 due to high MS/MSD recoveries. Bromochloromethane, dibromomethane, chlorobenzene, 2-butanone, 4-methyl-2-pentanone, 1,2-dibromoethane, and 2-hexanone were qualified as estimated in select samples due to low LCS recoveries. Although specific method criteria were not met in these instances, data usability was not impacted and the affected positive and non-detected results are usable as estimated values and estimated reporting limits.

The project goals with respect to precision were met for the volatiles data set. Hexachlorobutadiene was qualified as estimated in sample B179-SB2-0001 due to poor MS/MSD precision. Although specific method criteria were not met in this instance, data usability was not impacted and the affected non-detected result is usable as an estimated reporting limit.

The project goals with respect to sensitivity were met for the volatiles data set with the following exceptions. For select samples, the project quantitation limit (PQL) goals were not met by the adjusted LOQs due to percent moisture of the samples. All project action limits (PALs) were met by the adjusted LOQs except for vinyl chloride. However, all PALs were met by the adjusted LODs (reporting limits).

The project goals with respect to completeness were met for the volatiles data set. Data usability is not impacted with regards to completeness.

Semivolatiles – Full Scan

The project goals with respect to accuracy were met for the semivolatiles – full scan data set. Data usability is not impacted with regards to accuracy.

The project goals with respect to precision were met for the semivolatiles – full scan data set. Di-n-butylphthalate was qualified as estimated in samples B179-SB1-0001 and B179-SB-DUP02 due to poor field duplicate precision. Although specific method criteria were not met in this instance, data usability was not impacted and the affected positive results are usable as estimated values.

The project goals with respect to sensitivity were met for the semivolatiles – full scan data set with the following exceptions. For select samples, the PQL goals were not met by the adjusted LOQs due to

percent moisture of the samples. All PALs were met by the adjusted LOQs and LODs except for bis(2-ethylhexyl)phthalate and diethylphthalate as highlighted in the analytical specification. Data usability may be impacted for these compounds.

The project goals with respect to completeness were met for the semivolatiles – full scan data set with the following exceptions. The non-detected benzoic acid and benzidine results are rejected in sample B179-SB2-0001 due to no or low MS/MSD recovery. In addition, the non-detected benzoic acid and benzidine results are rejected in all samples due to no LCS/LCSD recoveries. These results should not be used for project decisions.

Semivolatiles – SIM

The project goals with respect to accuracy were met for the semivolatiles – SIM data set with the following exception. Several compounds were qualified as estimated in sample B179-SB-DUP01 due to poor internal standard performance. Although specific method criteria were not met in this instance, data usability was not impacted and the affected positive results are usable as estimated values. In addition, 2-methylnapthalene was qualified as estimated in select samples due to instrument calibration variability. Fluoranthene was qualified as estimated in sample B179-SB2-0001 due to low MS/MSD recoveries. Fluorene was qualified as estimated in select samples due to a low LCSD recovery. Although specific method criteria were not met in these instances, data usability was not impacted and the affected positive and non-detected results are usable as estimated values and estimated reporting limits.

The project goals with respect to precision were met for the semivolatiles – SIM data set with the following exception. Benzo(a)anthracene, benzo(a)pyrene, benzo(b)fluoranthene, benzo(g,h,i)perylene, chrysene, dibenzo(a,h)anthracene, fluoranthene, phenanthrene, and pyrene were qualified as estimated in samples B179-SB1-0001 and B179-SB-DUP02 due to poor field duplicate precision. Although specific method criteria were not met in this instance, data usability was not impacted and the affected positive results are usable as estimated values. In addition, 2-methylnaphthalene was qualified as estimated in samples B179-SB1-0001 and B179-SB-DUP02 due to poor field duplicate precision. Although specific method criteria were not met in this instance, data usability was not impacted and the affected positive results are usable as estimated values.

The project goals with respect to sensitivity and completeness were met for the semivolatiles – SIM data set. Data usability is not impacted with regards to sensitivity and completeness.

Pesticides

The project goals with respect to accuracy were met for the pesticides data set with the following exception. Dieldrin was qualified as estimated in select samples due to analytical interferences detected in the dual column analysis. Although specific method criteria were not met in this instance, the affected positive results are usable as estimated values which may have a minor impact on data usability. In addition, 4,4'-DDT, 4,4'-DDD, endosulfan II, and 4,4'-DDE were qualified as estimated in select samples due to analytical interferences detected in the dual column analysis. Although specific method criteria were not met in this instance, data usability is not impacted and the affected positive results are usable as estimated values.

The project goals with respect to precision were met for the pesticides data set. Gamma-BHC was qualified as estimated in samples B179-SB1-0001 and B179-SB-DUP02 due to poor field duplicate precision. Although specific method criteria were not met in this instance, data usability was not

impacted and the affected positive and non-detected results are usable as estimated values and estimated reporting limits.

The project goals with respect to sensitivity were met for the pesticides data set with the following exception. For select samples, the PQL goals were not met by the adjusted LOQs due to percent moisture of the samples. All PALs were met by the adjusted LOQs and LODs except alpha-chlordane, dieldrin, and gamma-chlordane as highlighted in the analytical specification. Data usability may be impacted for these compounds.

The project goals with respect to completeness were met for the pesticides data set. Data usability is not impacted with regards to completeness.

PCBs

The project goals with respect to accuracy, precision, sensitivity, and completeness were met for the PCB data set. Data usability is not impacted with regards to accuracy, precision, sensitivity, and completeness.

Tables: Data Summary Tables
Data Validation Qualifiers and Codes

Enclosures: Data Validation Worksheets

Data Validation Qualifiers and Codes

Data Validation Qualifiers:

= No qualifier attached to value (positive hit)
J = Value is estimated
U = Value is not detected
UJ = Value is not detected and estimated
R = Value (positive hit) is not usable
UR = Value was reported as ND but is not usable

Qualifier Codes:

A = Lab Blank Contamination
B = Field Blank Contamination
C = Calibration Noncompliance (e.g. % RSDs, %Ds, ICVs, CCVs, RRFs, etc.)
C01 = GC/MS Tuning Noncompliance
D = MS/MSD Recovery Noncompliance
E = LCS/LCSD Recovery Noncompliance
F = Lab Duplicate Imprecision
G = Field Duplicate Imprecision
H = Holding Time Exceedance
I = ICP Serial Dilution Noncompliance
J = GFAA PDS - GFAA MSA's $r < 0.995$
K = ICP Interference - includes ICS % R Noncompliance
L = Instrument Calibration Range Exceedance
M = Sample Preservation Noncompliance
N = Internal Standard Noncompliance
N01 = Internal Standard Recovery Noncompliance Dioxins
N02 = Recovery Standard Noncompliance Dioxins
N03 = Clean-up Standard Noncompliance Dioxins
O = Poor Instrument Performance (e.g. base-line drifting)
P = Uncertainty below quantitation limit (< QL but ≥ MDL)
Q = Other problems (can encompass a number of issues; e.g. chromatography,interferences, etc.)
R = Surrogates Recovery Noncompliance
S = Pesticide/PCB Resolution
T = % Breakdown Noncompliance for DDT and Endrin
U = % Difference between columns/detectors >25% for positive results determined via GC/HPLC
V = Non-linear calibrations; correlation coefficient $r < 0.995$
W = EMPC result
X = Signal to noise response drop
Y = Percent solids <30%
Z = Uncertainty at 2 sigma deviation is greater than sample activity

PROJ_NO: 02124	NSAMPLE	B179-SB1-0001-RE			B179-SB1-0507			B179-SB2-0001			B179-SB2-0709-RE		
SDG: WE19-7	LAB_ID	SD4698-2RA			SD4698-4			SD4698-8			SD4698-10RA		
FRACTION: OV	SAMP_DATE	7/27/2010			7/27/2010			7/27/2010			7/27/2010		
MEDIA: SOIL	QC_TYPE	NM			NM			NM			NM		
	UNITS	UG/KG			UG/KG			UG/KG			UG/KG		
	PCT_SOLIDS	90.9			74.7			94.8			86.4		
	DUP_OF												
PARAMETER		RESULT	VQL	QLCD	RESULT	VQL	QLCD	RESULT	VQL	QLCD	RESULT	VQL	QLCD
1,1,1,2-TETRACHLOROETHANE		2.4	U		2.8	U		2.4	U		2.2	U	
1,1,1-TRICHLOROETHANE		2	J	PR	2.8	U		2.4	U		0.45	J	PR
1,1,2,2-TETRACHLOROETHANE		2.4	UJ	N	2.8	U		2.4	U		2.2	U	
1,1,2-TRICHLOROETHANE		2.4	U		2.8	U		2.4	U		2.2	U	
1,1-DICHLOROETHANE		2.4	U		2.8	U		2.4	U		2.2	U	
1,1-DICHLOROETHENE		2.4	U		2.8	U		2.4	U		2.2	U	
1,1-DICHLOROPROPENE		2.4	U		2.8	U		2.4	U		2.2	U	
1,2,3-TRICHLOROBENZENE		2.4	UJ	N	2.8	U		2.4	U		2.2	U	
1,2,3-TRICHLOROPROPANE		2.4	UJ	N	2.8	U		2.4	U		2.2	U	
1,2,4-TRICHLOROBENZENE		2.4	UJ	N	2.8	U		2.4	U		2.2	U	
1,2,4-TRIMETHYLBENZENE		2.4	UJ	N	4.2	J	PR	2.4	U		2.2	U	
1,2-DIBROMO-3-CHLOROPROPANE		2.4	UJ	N	2.8	U		2.4	U		2.2	U	
1,2-DIBROMOETHANE		2.4	U		2.8	U		2.4	U		2.2	U	
1,2-DICHLOROBENZENE		2.4	UJ	N	2.8	U		2.4	U		2.2	U	
1,2-DICHLOROETHANE		2.4	U		2.8	U		2.4	U		2.2	U	
1,2-DICHLOROPROPANE		2.4	U		2.8	U		2.4	U		2.2	U	
1,3,5-TRIMETHYLBENZENE		2.4	UJ	N	2.8	U		2.4	U		2.2	U	
1,3-DICHLOROBENZENE		2.4	UJ	N	2.8	U		2.4	U		2.2	U	
1,3-DICHLOROPROPANE		2.4	U		2.8	U		2.4	U		2.2	U	
1,4-DICHLOROBENZENE		2.4	UJ	N	2.8	U		2.4	U		2.2	U	
2,2-DICHLOROPROPANE		2.4	U		2.8	U		2.4	U		2.2	U	
2-BUTANONE		17	J	PR	14	U		5.8	J	DPR	11	U	
2-CHLOROTOLUENE		2.4	UJ	N	2.8	U		2.4	U		2.2	U	
2-HEXANONE		12	U		14	U		12	U		11	U	
4-CHLOROTOLUENE		2.4	UJ	N	2.8	U		2.4	U		2.2	U	
4-ISOPROPYLTOLUENE		2.4	UJ	N	2.8	U		2.4	U		2.2	U	
4-METHYL-2-PENTANONE		12	U		14	U		12	U		11	U	
ACETONE		230	J	R	51	UJ	AR	74	UJ	ADR	44	UJ	AR
BENZENE		2.4	U		2.8	U		2.4	U		2.2	U	
BROMOBENZENE		2.4	UJ	N	2.8	U		2.4	U		2.2	U	
BROMOCHLOROMETHANE		2.4	UJ	E	2.8	UJ	E	2.4	UJ	E	2.2	UJ	E
BROMODICHLOROMETHANE		2.4	U		2.8	U		2.4	U		2.2	U	
BROMOFORM		2.4	U		2.8	U		2.4	U		2.2	U	
BROMOMETHANE		4.8	UJ	C	5.5	UJ	C	4.9	UJ	C	4.3	UJ	C
CARBON DISULFIDE		2.4	U		5.6	J	R	2.4	U		2.2	U	

PROJ_NO: 02124	NSAMPLE	B179-SB3-0001-RE			B179-SB3-0709			B179-SB-DUP01-RE			B179-SB-DUP02-RE		
SDG: WE19-7	LAB_ID	SD4698-12RA			SD4698-14			SD4698-16RA			SD4698-6RA		
FRACTION: OV	SAMP_DATE	7/27/2010			7/27/2010			7/27/2010			7/27/2010		
MEDIA: SOIL	QC_TYPE	NM			NM			FD			FD		
	UNITS	UG/KG			UG/KG			UG/KG			UG/KG		
	PCT_SOLIDS	86.0			90.4			94.9			86.7		
	DUP_OF							B179-SB3-0001			B179-SB1-0001		
PARAMETER	RESULT	VQL	QLCD	RESULT	VQL	QLCD	RESULT	VQL	QLCD	RESULT	VQL	QLCD	
1,1,1,2-TETRACHLOROETHANE	3	U		2.2	U		2.8	U		2.5	U		
1,1,1-TRICHLOROETHANE	3	U		1.5	J	PR	2.8	U		1.6	J	PR	
1,1,2,2-TETRACHLOROETHANE	3	U		2.2	U		2.8	U		2.5	UJ	N	
1,1,2-TRICHLOROETHANE	3	U		2.2	U		2.8	U		2.5	U		
1,1-DICHLOROETHANE	3	U		3.4	J	PR	2.8	U		2.5	U		
1,1-DICHLOROETHENE	3	U		2.2	U		2.8	U		2.5	U		
1,1-DICHLOROPROPENE	3	U		2.2	U		2.8	U		2.5	U		
1,2,3-TRICHLOROBENZENE	3	U		2.2	U		2.8	U		2.5	UJ	N	
1,2,3-TRICHLOROPROPANE	3	U		2.2	U		2.8	U		2.5	UJ	N	
1,2,4-TRICHLOROBENZENE	3	U		2.2	U		2.8	U		2.5	UJ	N	
1,2,4-TRIMETHYLBENZENE	3	U		2.2	U		2.8	U		2.5	UJ	N	
1,2-DIBROMO-3-CHLOROPROPANE	3	U		2.2	U		2.8	U		2.5	UJ	N	
1,2-DIBROMOETHANE	3	U		2.2	U		2.8	UJ	E	2.5	U		
1,2-DICHLOROBENZENE	3	U		2.2	U		2.8	U		2.5	UJ	N	
1,2-DICHLOROETHANE	3	U		2.2	U		2.8	U		2.5	U		
1,2-DICHLOROPROPANE	3	U		2.2	U		2.8	U		2.5	U		
1,3,5-TRIMETHYLBENZENE	3	U		2.2	U		2.8	U		2.5	UJ	N	
1,3-DICHLOROBENZENE	3	U		2.2	U		2.8	U		2.5	UJ	N	
1,3-DICHLOROPROPANE	3	U		2.2	U		2.8	U		2.5	U		
1,4-DICHLOROBENZENE	3	U		2.2	U		2.8	U		2.5	UJ	N	
2,2-DICHLOROPROPANE	3	U		2.2	U		2.8	U		2.5	U		
2-BUTANONE	14	J	PR	11	U		8.4	J	EPR	18	J	PR	
2-CHLOROTOLUENE	3	U		2.2	U		2.8	U		2.5	UJ	N	
2-HEXANONE	15	U		11	U		14	UJ	E	12	U		
4-CHLOROTOLUENE	3	U		2.2	U		2.8	U		2.5	UJ	N	
4-ISOPROPYLTOLUENE	3	U		2.2	U		2.8	U		2.5	UJ	N	
4-METHYL-2-PENTANONE	15	U		11	U		14	UJ	E	12	U		
ACETONE	220	J	R	12	UJ	APR	140	J	R	270	J	R	
BENZENE	3	U		2.2	U		2.8	U		2.5	U		
BROMOBENZENE	3	U		2.2	U		2.8	U		2.5	UJ	N	
BROMOCHLOROMETHANE	3	UJ	E	2.2	UJ	E	2.8	U		2.5	UJ	E	
BROMODICHLOROMETHANE	3	U		2.2	U		2.8	U		2.5	U		
BROMOFORM	3	U		2.2	U		2.8	U		2.5	U		
BROMOMETHANE	6	UJ	C	4.4	UJ	C	5.5	UJ	C	5	UJ	C	
CARBON DISULFIDE	3	U		2.2	U		2.8	U		2.5	U		

PROJ_NO: 02124	NSAMPLE	TB-SB-072710
SDG: WE19-7	LAB_ID	SD4698-17
FRACTION: OV	SAMP_DATE	7/27/2010
MEDIA: SOIL	QC_TYPE	TB
	UNITS	UG/KG
	PCT_SOLIDS	
	DUP_OF	

PARAMETER	RESULT	VQL	QLCD
1,1,1,2-TETRACHLOROETHANE	2.5	U	
1,1,1-TRICHLOROETHANE	2.5	U	
1,1,2,2-TETRACHLOROETHANE	2.5	U	
1,1,2-TRICHLOROETHANE	2.5	U	
1,1-DICHLOROETHANE	2.5	U	
1,1-DICHLOROETHENE	2.5	U	
1,1-DICHLOROPROPENE	2.5	U	
1,2,3-TRICHLOROBENZENE	2.5	U	
1,2,3-TRICHLOROPROPANE	2.5	U	
1,2,4-TRICHLOROBENZENE	2.5	U	
1,2,4-TRIMETHYLBENZENE	2.5	U	
1,2-DIBROMO-3-CHLOROPROPANE	2.5	U	
1,2-DIBROMOETHANE	2.5	UJ	E
1,2-DICHLOROBENZENE	2.5	U	
1,2-DICHLOROETHANE	2.5	U	
1,2-DICHLOROPROPANE	2.5	U	
1,3,5-TRIMETHYLBENZENE	2.5	U	
1,3-DICHLOROBENZENE	2.5	U	
1,3-DICHLOROPROPANE	2.5	U	
1,4-DICHLOROBENZENE	2.5	U	
2,2-DICHLOROPROPANE	2.5	U	
2-BUTANONE	12	UJ	E
2-CHLOROTOLUENE	2.5	U	
2-HEXANONE	12	UJ	E
4-CHLOROTOLUENE	2.5	U	
4-ISOPROPYLTOLUENE	2.5	U	
4-METHYL-2-PENTANONE	12	UJ	E
ACETONE	13	UJ	APR
BENZENE	2.5	U	
BROMOBENZENE	2.5	U	
BROMOCHLOROMETHANE	2.5	U	
BROMODICHLOROMETHANE	2.5	U	
BROMOFORM	2.5	U	
BROMOMETHANE	5	UJ	C
CARBON DISULFIDE	2.5	U	

PROJ_NO: 02124	NSAMPLE	B179-SB1-0001-RE			B179-SB1-0507			B179-SB2-0001			B179-SB2-0709-RE		
SDG: WE19-7	LAB_ID	SD4698-2RA			SD4698-4			SD4698-8			SD4698-10RA		
FRACTION: OV	SAMP_DATE	7/27/2010			7/27/2010			7/27/2010			7/27/2010		
MEDIA: SOIL	QC_TYPE	NM			NM			NM			NM		
	UNITS	UG/KG			UG/KG			UG/KG			UG/KG		
	PCT_SOLIDS	90.9			74.7			94.8			86.4		
	DUP_OF												
PARAMETER		RESULT	VQL	QLCD	RESULT	VQL	QLCD	RESULT	VQL	QLCD	RESULT	VQL	QLCD
CARBON TETRACHLORIDE		2.4	U		2.8	U		2.4	U		2.2	U	
CHLOROBENZENE		2.4	UJ	E	2.8	UJ	E	2.4	UJ	E	2.2	UJ	E
CHLORODIBROMOMETHANE		2.4	U		2.8	U		2.4	U		2.2	U	
CHLOROETHANE		4.8	U		5.5	U		4.9	U		4.3	U	
CHLOROFORM		0.52	J	PR	2.8	U		2.4	U		2.2	U	
CHLOROMETHANE		4.8	U		5.5	U		4.9	U		4.3	U	
CIS-1,2-DICHLOROETHENE		2.4	U		2.8	U		2.4	U		2.2	U	
CIS-1,3-DICHLOROPROPENE		2.4	U		2.8	U		2.4	U		2.2	U	
DIBROMOMETHANE		2.4	UJ	E	2.8	UJ	E	2.4	UJ	E	2.2	UJ	E
DICHLORODIFLUOROMETHANE		4.8	U		5.5	U		4.9	U		4.3	U	
ETHYLBENZENE		2.4	U		0.76	J	PR	2.4	U		2.2	U	
HEXACHLOROBUTADIENE		2.4	UJ	N	2.8	U		2.4	UJ	D	2.2	U	
ISOPROPYLBENZENE		2.4	UJ	N	4.5	J	PR	2.4	U		2.2	U	
M+P-XYLENES		4.8	U		5.5	U		4.9	U		4.3	U	
METHYL TERT-BUTYL ETHER		2.4	U		2.8	U		2.4	U		2.2	U	
METHYLENE CHLORIDE		12	U		14	U		12	U		11	U	
N-BUTYLBENZENE		2.4	UJ	N	1.4	J	PR	2.4	U		2.2	U	
N-PROPYLBENZENE		2.4	UJ	N	2.2	J	PR	2.4	U		2.2	U	
O-XYLENE		2.4	U		2.8	U		2.4	U		2.2	U	
SEC-BUTYLBENZENE		2.4	UJ	N	13	J	R	2.4	U		1	J	PR
STYRENE		2.4	U		2.8	U		2.4	U		2.2	U	
TERT-BUTYLBENZENE		2.4	UJ	N	2.2	J	PR	2.4	U		2.2	U	
TETRACHLOROETHENE		2.4	U		2.8	U		2.4	U		2.2	U	
TOLUENE		2.4	U		2.8	U		2.4	U		2.2	U	
TRANS-1,2-DICHLOROETHENE		2.4	U		2.8	U		2.4	U		2.2	U	
TRANS-1,3-DICHLOROPROPENE		2.4	U		2.8	U		2.4	U		2.2	U	
TRICHLOROETHENE		2.4	U		2.8	U		2.4	U		2.2	U	
TRICHLOROFLUOROMETHANE		4.8	U		5.5	U		4.9	U		4.3	U	
VINYL CHLORIDE		4.8	U		5.5	U		4.9	U		4.3	U	

PROJ_NO: 02124	NSAMPLE	B179-SB3-0001-RE			B179-SB3-0709			B179-SB-DUP01-RE			B179-SB-DUP02-RE		
SDG: WE19-7	LAB_ID	SD4698-12RA			SD4698-14			SD4698-16RA			SD4698-6RA		
FRACTION: OV	SAMP_DATE	7/27/2010			7/27/2010			7/27/2010			7/27/2010		
MEDIA: SOIL	QC_TYPE	NM			NM			FD			FD		
	UNITS	UG/KG			UG/KG			UG/KG			UG/KG		
	PCT_SOLIDS	86.0			90.4			94.9			86.7		
	DUP_OF							B179-SB3-0001			B179-SB1-0001		
PARAMETER		RESULT	VQL	QLCD	RESULT	VQL	QLCD	RESULT	VQL	QLCD	RESULT	VQL	QLCD
CARBON TETRACHLORIDE		3	U		2.2	U		2.8	U		2.5	U	
CHLOROBENZENE		3	UJ	E	2.2	UJ	E	2.8	U		2.5	UJ	E
CHLORODIBROMOMETHANE		3	U		2.2	U		2.8	U		2.5	U	
CHLOROETHANE		6	U		4.4	U		5.5	U		5	U	
CHLOROFORM		3	U		2.2	U		2.8	U		1.4	J	PR
CHLOROMETHANE		6	U		4.4	U		5.5	U		5	U	
CIS-1,2-DICHLOROETHENE		3	U		2.2	U		2.8	U		2.5	U	
CIS-1,3-DICHLOROPROPENE		3	U		2.2	U		2.8	U		2.5	U	
DIBROMOMETHANE		3	UJ	E	2.2	UJ	E	2.8	U		2.5	UJ	E
DICHLORODIFLUOROMETHANE		6	U		4.4	U		5.5	U		5	U	
ETHYLBENZENE		3	U		2.2	U		2.8	U		2.5	U	
HEXACHLOROBUTADIENE		3	U		2.2	U		2.8	U		2.5	UJ	N
ISOPROPYLBENZENE		3	U		2.2	U		2.8	U		2.5	UJ	N
M+P-XYLENES		6	U		4.4	U		5.5	U		5	U	
METHYL TERT-BUTYL ETHER		3	U		2.2	U		2.8	U		2.5	U	
METHYLENE CHLORIDE		15	U		11	U		14	U		12	U	
N-BUTYLBENZENE		3	U		2.2	U		2.8	U		2.5	UJ	N
N-PROPYLBENZENE		3	U		2.2	U		2.8	U		2.5	UJ	N
O-XYLENE		3	U		2.2	U		2.8	U		2.5	U	
SEC-BUTYLBENZENE		3	U		2.2	U		2.8	U		2.5	UJ	N
STYRENE		3	U		2.2	U		2.8	U		2.5	U	
TERT-BUTYLBENZENE		3	U		2.2	U		2.8	U		2.5	UJ	N
TETRACHLOROETHENE		3	U		2.2	U		2.8	U		2.5	U	
TOLUENE		3	U		2.2	U		2.8	U		2.5	U	
TRANS-1,2-DICHLOROETHENE		3	U		2.2	U		2.8	U		2.5	U	
TRANS-1,3-DICHLOROPROPENE		3	U		2.2	U		2.8	U		2.5	U	
TRICHLOROETHENE		3	U		2.2	U		2.8	U		0.84	J	PR
TRICHLOROFLUOROMETHANE		6	U		4.4	U		5.5	U		5	U	
VINYL CHLORIDE		6	U		4.4	U		5.5	U		5	U	

PROJ_NO: 02124	NSAMPLE	TB-SB-072710
SDG: WE19-7	LAB_ID	SD4698-17
FRACTION: OV	SAMP_DATE	7/27/2010
MEDIA: SOIL	QC_TYPE	TB
	UNITS	UG/KG
	PCT_SOLIDS	
	DUP_OF	

PARAMETER	RESULT	VQL	QLCD
CARBON TETRACHLORIDE	2.5	U	
CHLOROBENZENE	2.5	U	
CHLORODIBROMOMETHANE	2.5	U	
CHLOROETHANE	5	U	
CHLOROFORM	2.5	U	
CHLOROMETHANE	5	U	
CIS-1,2-DICHLOROETHENE	2.5	U	
CIS-1,3-DICHLOROPROPENE	2.5	U	
DIBROMOMETHANE	2.5	U	
DICHLORODIFLUOROMETHANE	5	U	
ETHYLBENZENE	2.5	U	
HEXACHLOROBUTADIENE	2.5	U	
ISOPROPYLBENZENE	2.5	U	
M+P-XYLENES	5	U	
METHYL TERT-BUTYL ETHER	2.5	U	
METHYLENE CHLORIDE	12	U	
N-BUTYLBENZENE	2.5	U	
N-PROPYLBENZENE	2.5	U	
O-XYLENE	2.5	U	
SEC-BUTYLBENZENE	2.5	U	
STYRENE	2.5	U	
TERT-BUTYLBENZENE	2.5	U	
TETRACHLOROETHENE	2.5	U	
TOLUENE	2.5	U	
TRANS-1,2-DICHLOROETHENE	2.5	U	
TRANS-1,3-DICHLOROPROPENE	2.5	U	
TRICHLOROETHENE	2.5	U	
TRICHLOROFLUOROMETHANE	5	U	
VINYL CHLORIDE	5	U	

PROJ_NO: 02124	NSAMPLE	B179-SB1-0001			B179-SB1-0507			B179-SB2-0001			B179-SB2-0709		
SDG: WE19-7	LAB_ID	SD4698-1			SD4698-3			SD4698-7			SD4698-9		
FRACTION: OS	SAMP_DATE	7/27/2010			7/27/2010			7/27/2010			7/27/2010		
MEDIA: SOIL	QC_TYPE	NM			NM			NM			NM		
	UNITS	UG/KG			UG/KG			UG/KG			UG/KG		
	PCT_SOLIDS	92.8			84.6			83.2			90.8		
	DUP_OF												
PARAMETER		RESULT	VQL	QLCD	RESULT	VQL	QLCD	RESULT	VQL	QLCD	RESULT	VQL	QLCD
1,1-BIPHENYL		120	J	P	290	U		280	U		260	U	
1,2-DIPHENYLHYDRAZINE		530	U		580	U		570	U		530	U	
2,2'-OXYBIS(1-CHLOROPROPANE)		260	U		290	U		280	U		260	U	
2,4,5-TRICHLOROPHENOL		660	U		730	U		710	U		660	U	
2,4,6-TRICHLOROPHENOL		260	U		290	U		280	U		260	U	
2,4-DICHLOROPHENOL		260	U		290	U		280	U		260	U	
2,4-DIMETHYLPHENOL		260	U		290	U		280	U		260	U	
2,4-DINITROPHENOL		660	U		730	U		710	U		660	U	
2,4-DINITROTOLUENE		260	U		290	U		280	U		260	U	
2,6-DICHLOROPHENOL		260	U		290	U		280	U		260	U	
2,6-DINITROTOLUENE		260	U		290	U		280	U		260	U	
2-CHLORONAPHTHALENE		260	U		290	U		280	U		260	U	
2-CHLOROPHENOL		260	U		290	U		280	U		260	U	
2-METHYLPHENOL		260	U		290	U		280	U		260	U	
2-NITROANILINE		660	U		730	U		710	U		660	U	
2-NITROPHENOL		260	U		290	U		280	U		260	U	
3&4-METHYLPHENOL		260	U		290	U		280	U		260	U	
3,3'-DICHLOROBENZIDINE		260	U		290	U		280	U		260	U	
3-NITROANILINE		660	U		730	U		710	U		660	U	
4,6-DINITRO-2-METHYLPHENOL		660	U		730	U		710	U		660	U	
4-BROMOPHENYL PHENYL ETHER		260	U		290	U		280	U		260	U	
4-CHLORO-3-METHYLPHENOL		260	U		290	U		280	U		260	U	
4-CHLOROANILINE		260	U		290	U		280	U		260	U	
4-CHLOROPHENYL PHENYL ETHER		260	U		290	U		280	U		260	U	
4-NITROANILINE		660	U		730	U		710	U		660	U	
4-NITROPHENOL		660	U		730	U		710	U		660	U	
BENZIDINE		1200	UR	E	1300	UR	E	1300	UR	DE	1200	UR	E
BENZOIC ACID		660	UR	E	730	UR	E	710	UR	DE	660	UR	E
BENZYL ALCOHOL		530	U		580	U		570	U		530	U	
BIS(2-CHLOROETHOXY)METHANE		260	U		290	U		280	U		260	U	
BIS(2-CHLOROETHYL)ETHER		260	U		290	U		280	U		260	U	
BIS(2-ETHYLHEXYL)PHTHALATE		180	J	P	290	U		280	U		230	J	P
BUTYL BENZYL PHTHALATE		260	U		290	U		280	U		260	U	
CARBAZOLE		900			290	U		280	U		260	U	
DIBENZOFURAN		600			290	U		280	U		260	U	

PROJ_NO: 02124	NSAMPLE	B179-SB3-0001			B179-SB3-0709			B179-SB-DUP01			B179-SB-DUP02		
SDG: WE19-7	LAB_ID	SD4698-11			SD4698-13			SD4698-15			SD4698-5		
FRACTION: OS	SAMP_DATE	7/27/2010			7/27/2010			7/27/2010			7/27/2010		
MEDIA: SOIL	QC_TYPE	NM			NM			FD			FD		
	UNITS	UG/KG			UG/KG			UG/KG			UG/KG		
	PCT_SOLIDS	96.8			90.7			95.5			88.1		
	DUP_OF							B179-SB3-0001			B179-SB1-0001		
PARAMETER	RESULT	VQL	QLCD	RESULT	VQL	QLCD	RESULT	VQL	QLCD	RESULT	VQL	QLCD	
1,1-BIPHENYL	240	U		270	U		250	U		160	J	P	
1,2-DIPHENYLHYDRAZINE	490	U		540	U		500	U		550	U		
2,2'-OXYBIS(1-CHLOROPROPANE)	240	U		270	U		250	U		280	U		
2,4,5-TRICHLOROPHENOL	610	U		670	U		620	U		690	U		
2,4,6-TRICHLOROPHENOL	240	U		270	U		250	U		280	U		
2,4-DICHLOROPHENOL	240	U		270	U		250	U		280	U		
2,4-DIMETHYLPHENOL	240	U		270	U		250	U		280	U		
2,4-DINITROPHENOL	610	U		670	U		620	U		690	U		
2,4-DINITROTOLUENE	240	U		270	U		250	U		280	U		
2,6-DICHLOROPHENOL	240	U		270	U		250	U		280	U		
2,6-DINITROTOLUENE	240	U		270	U		250	U		280	U		
2-CHLORONAPHTHALENE	240	U		270	U		250	U		280	U		
2-CHLOROPHENOL	240	U		270	U		250	U		280	U		
2-METHYLPHENOL	240	U		270	U		250	U		280	U		
2-NITROANILINE	610	U		670	U		620	U		690	U		
2-NITROPHENOL	240	U		270	U		250	U		280	U		
3&4-METHYLPHENOL	240	U		270	U		250	U		280	U		
3,3'-DICHLOROBENZIDINE	240	U		270	U		250	U		280	U		
3-NITROANILINE	610	U		670	U		620	U		690	U		
4,6-DINITRO-2-METHYLPHENOL	610	U		670	U		620	U		690	U		
4-BROMOPHENYL PHENYL ETHER	240	U		270	U		250	U		280	U		
4-CHLORO-3-METHYLPHENOL	240	U		270	U		250	U		280	U		
4-CHLOROANILINE	240	U		270	U		250	U		280	U		
4-CHLOROPHENYL PHENYL ETHER	240	U		270	U		250	U		280	U		
4-NITROANILINE	610	U		670	U		620	U		690	U		
4-NITROPHENOL	610	U		670	U		620	U		690	U		
BENZIDINE	1100	UR	E	1200	UR	E	1100	UR	E	1300	UR	E	
BENZOIC ACID	610	UR	E	670	UR	E	620	UR	E	690	UR	E	
BENZYL ALCOHOL	490	U		540	U		500	U		550	U		
BIS(2-CHLOROETHOXY)METHANE	240	U		270	U		250	U		280	U		
BIS(2-CHLOROETHYL)ETHER	240	U		270	U		250	U		280	U		
BIS(2-ETHYLHEXYL)PHTHALATE	240	U		270	U		140	J	P	120	J	P	
BUTYL BENZYL PHTHALATE	240	U		270	U		250	U		280	U		
CARBAZOLE	240	U		270	U		250	U		1400			
DIBENZOFURAN	240	U		270	U		250	U		1000			

PROJ_NO: 02124	NSAMPLE	B179-SB1-0001			B179-SB1-0507			B179-SB2-0001			B179-SB2-0709		
SDG: WE19-7	LAB_ID	SD4698-1			SD4698-3			SD4698-7			SD4698-9		
FRACTION: OS	SAMP_DATE	7/27/2010			7/27/2010			7/27/2010			7/27/2010		
MEDIA: SOIL	QC_TYPE	NM			NM			NM			NM		
	UNITS	UG/KG			UG/KG			UG/KG			UG/KG		
	PCT_SOLIDS	92.8			84.6			83.2			90.8		
	DUP_OF												
PARAMETER		RESULT	VQL	QLCD	RESULT	VQL	QLCD	RESULT	VQL	QLCD	RESULT	VQL	QLCD
DIETHYL PHTHALATE		260	U		290	U		280	U		260	U	
DIMETHYL PHTHALATE		260	U		290	U		280	U		260	U	
DI-N-BUTYL PHTHALATE		120	J	GP	290	U		280	U		260	U	
DI-N-OCTYL PHTHALATE		260	U		290	U		280	U		260	U	
HEXACHLOROBUTADIENE		260	U		290	U		280	U		260	U	
HEXACHLOROETHANE		260	U		290	U		280	U		260	U	
ISOPHORONE		260	U		290	U		280	U		260	U	
NITROBENZENE		260	U		290	U		280	U		260	U	
N-NITROSODIMETHYLAMINE		260	U		290	U		280	U		260	U	
N-NITROSO-DI-N-PROPYLAMINE		260	U		290	U		280	U		260	U	
N-NITROSODIPHENYLAMINE		260	U		290	U		280	U		260	U	
N-NITROSOPYRROLIDINE		260	U		290	U		280	U		260	U	
PENTACHLOROPHENOL		660	U		730	U		710	U		660	U	
PHENOL		260	U		290	U		280	U		260	U	

PROJ_NO: 02124	NSAMPLE	B179-SB3-0001			B179-SB3-0709			B179-SB-DUP01			B179-SB-DUP02		
SDG: WE19-7	LAB_ID	SD4698-11			SD4698-13			SD4698-15			SD4698-5		
FRACTION: OS	SAMP_DATE	7/27/2010			7/27/2010			7/27/2010			7/27/2010		
MEDIA: SOIL	QC_TYPE	NM			NM			FD			FD		
	UNITS	UG/KG			UG/KG			UG/KG			UG/KG		
	PCT_SOLIDS	96.8			90.7			95.5			88.1		
	DUP_OF							B179-SB3-0001			B179-SB1-0001		
PARAMETER		RESULT	VQL	QLCD	RESULT	VQL	QLCD	RESULT	VQL	QLCD	RESULT	VQL	QLCD
DIETHYL PHTHALATE		240	U		270	U		250	U		280	U	
DIMETHYL PHTHALATE		240	U		270	U		250	U		280	U	
DI-N-BUTYL PHTHALATE		240	U		270	U		250	U		480	J	G
DI-N-OCTYL PHTHALATE		240	U		270	U		250	U		280	U	
HEXACHLOROBUTADIENE		240	U		270	U		250	U		280	U	
HEXACHLOROETHANE		240	U		270	U		250	U		280	U	
ISOPHORONE		240	U		270	U		250	U		280	U	
NITROBENZENE		240	U		270	U		250	U		280	U	
N-NITROSODIMETHYLAMINE		240	U		270	U		250	U		280	U	
N-NITROSO-DI-N-PROPYLAMINE		240	U		270	U		250	U		280	U	
N-NITROSODIPHENYLAMINE		240	U		270	U		250	U		280	U	
N-NITROSOPYRROLIDINE		240	U		270	U		250	U		280	U	
PENTACHLOROPHENOL		610	U		670	U		620	U		690	U	
PHENOL		240	U		270	U		250	U		280	U	

PROJ_NO: 02124	NSAMPLE	B179-SB1-0001			B179-SB1-0001-DL			B179-SB1-0507			B179-SB2-0001		
SDG: WE19-7	LAB_ID	SD4698-1			SD4698-1DL			SD4698-3			SD4698-7		
FRACTION: PAH	SAMP_DATE	7/27/2010			7/27/2010			7/27/2010			7/27/2010		
MEDIA: SOIL	QC_TYPE	NM			NM			NM			NM		
	UNITS	UG/KG			UG/KG			UG/KG			UG/KG		
	PCT_SOLIDS	92.8			92.8			84.6			83.2		
	DUP_OF												
PARAMETER		RESULT	VQL	QLCD	RESULT	VQL	QLCD	RESULT	VQL	QLCD	RESULT	VQL	QLCD
2-METHYLNAPHTHALENE		210	J	G				12	U		12	U	
ACENAPHTHENE					700	J	P	2.3	J	P	12	U	
ACENAPHTHYLENE		11	U					12	U		12	U	
ANTHRACENE					1100			4.9	J	P	3.2	J	P
BENZO(A)ANTHRACENE					2600	J	G	16	J	P	19	J	P
BENZO(A)PYRENE					1800	J	G	16	J	P	19	J	P
BENZO(B)FLUORANTHENE					2700	J	G	25			28		
BENZO(G,H,I)PERYLENE					1000	J	G	9.2	J	P	13	J	P
BENZO(K)FLUORANTHENE					960			8.2	J	P	9.7	J	P
CHRYSENE					2400	J	G	17	J	P	20	J	P
DIBENZO(A,H)ANTHRACENE		270	J	G				5.5	J	P	12	U	
FLUORANTHENE					4500	J	G	46			30	J	D
FLUORENE					800	J	EP	12	UJ	E	12	UJ	E
INDENO(1,2,3-CD)PYRENE					1400			16	J	P	16	J	P
NAPHTHALENE					1000			12	U		12	U	
PHENANTHRENE					5700	J	G	24	J	P	23	J	P
PYRENE					4500	J	G	32			31		

PROJ_NO: 02124	NSAMPLE	B179-SB2-0709			B179-SB3-0001			B179-SB3-0001-DL			B179-SB3-0709		
SDG: WE19-7	LAB_ID	SD4698-9			SD4698-11			SD4698-11DL			SD4698-13		
FRACTION: PAH	SAMP_DATE	7/27/2010			7/27/2010			7/27/2010			7/27/2010		
MEDIA: SOIL	QC_TYPE	NM			NM			NM			NM		
	UNITS	UG/KG			UG/KG			UG/KG			UG/KG		
	PCT_SOLIDS	90.8			96.8			96.8			90.7		
	DUP_OF												
PARAMETER		RESULT	VQL	QLCD	RESULT	VQL	QLCD	RESULT	VQL	QLCD	RESULT	VQL	QLCD
2-METHYLNAPHTHALENE		11	U		6.6	J	P				11	U	
ACENAPHTHENE		11	U		17	J	P				11	U	
ACENAPHTHYLENE		11	U		9.9	U					11	U	
ANTHRACENE		2.7	J	P	33						11	U	
BENZO(A)ANTHRACENE		15	J	P	160						11	J	P
BENZO(A)PYRENE		16	J	P	140						9	J	P
BENZO(B)FLUORANTHENE		26			220						22	J	P
BENZO(G,H,I)PERYLENE		10	J	P	80						7.9	J	P
BENZO(K)FLUORANTHENE		8.3	J	P	72						8.9	J	P
CHRYSENE		18	J	P	150						15	J	P
DIBENZO(A,H)ANTHRACENE		2.5	J	P	26						2.3	J	P
FLUORANTHENE		25			230						15	J	P
FLUORENE		11	UJ	E	22	J	E				11	UJ	E
INDENO(1,2,3-CD)PYRENE		12	J	P	110						12	J	P
NAPHTHALENE		11	U		14	J	P				11	U	
PHENANTHRENE		20	J	P	220						2.7	J	P
PYRENE		33						340			18	J	P

PROJ_NO: 02124	NSAMPLE	B179-SB-DUP01			B179-SB-DUP01-RE			B179-SB-DUP02			B179-SB-DUP02-DL		
SDG: WE19-7	LAB_ID	SD4698-15			SD4698-15RA			SD4698-5			SD4698-5DL		
FRACTION: PAH	SAMP_DATE	7/27/2010			7/27/2010			7/27/2010			7/27/2010		
MEDIA: SOIL	QC_TYPE	FD			FD			FD			FD		
	UNITS	UG/KG			UG/KG			UG/KG			UG/KG		
	PCT_SOLIDS	95.5			95.5			88.1			88.1		
	DUP_OF	B179-SB3-0001			B179-SB3-0001			B179-SB1-0001			B179-SB1-0001		
PARAMETER		RESULT	VQL	QLCD	RESULT	VQL	QLCD	RESULT	VQL	QLCD	RESULT	VQL	QLCD
2-METHYLNAPHTHALENE					4.3	J	CP				490	J	GP
ACENAPHTHENE					13	J	P				1100	J	P
ACENAPHTHYLENE					10	U		11	U				
ANTHRACENE					26						2000		
BENZO(A)ANTHRACENE					140	J	N				4600	J	G
BENZO(A)PYRENE					120	J	N				3300	J	G
BENZO(B)FLUORANTHENE					180	J	N				4800	J	G
BENZO(G,H,I)PERYLENE					68	J	N				1700	J	G
BENZO(K)FLUORANTHENE					70	J	N				1500		
CHRYSENE					140	J	N				4300	J	G
DIBENZO(A,H)ANTHRACENE					20	J	NP				620	J	GP
FLUORANTHENE					220						9200	J	G
FLUORENE					16	J	EP				1500	J	E
INDENO(1,2,3-CD)PYRENE					91	J	N				2200		
NAPHTHALENE					9.6	J	P				1800		
PHENANTHRENE					180						12000	J	G
PYRENE		260	J	N							7800	J	G

PROJ_NO: 02124	NSAMPLE	B179-SB1-0001			B179-SB1-0507			B179-SB2-0001			B179-SB2-0709		
SDG: WE19-7	LAB_ID	SD4698-1			SD4698-3			SD4698-7			SD4698-9		
FRACTION: PEST/PCB	SAMP_DATE	7/27/2010			7/27/2010			7/27/2010			7/27/2010		
MEDIA: SOIL	QC_TYPE	NM			NM			NM			NM		
	UNITS	UG/KG			UG/KG			UG/KG			UG/KG		
	PCT_SOLIDS	92.8			84.6			83.2			90.8		
	DUP_OF												
PARAMETER		RESULT	VQL	QLCD	RESULT	VQL	QLCD	RESULT	VQL	QLCD	RESULT	VQL	QLCD
4,4'-DDD		1.7	U		3.2	J	PU	1.9	U		1.8	U	
4,4'-DDE		1.7	U		1.5	J	P	1.9	U		1.8	U	
4,4'-DDT		5.3	UJ	U	1.9	UJ	PU	1.9	U		1.8	U	
ALDRIN		0.88	U		1	U		0.98	U		0.91	U	
ALPHA-BHC		0.88	U		1	U		0.98	U		0.91	U	
ALPHA-CHLORDANE		0.88	U		1	U		0.98	U		0.91	U	
AROCLOR-1016		9.1	U		10	U		9.8	U		9.1	U	
AROCLOR-1221		9.1	U		10	U		9.8	U		9.1	U	
AROCLOR-1232		11	U		12	U		12	U		11	U	
AROCLOR-1242		9.1	U		10	U		9.8	U		9.1	U	
AROCLOR-1248		9.1	U		10	U		9.8	U		9.1	U	
AROCLOR-1254		9.1	U		10	U		9.8	U		9.1	U	
AROCLOR-1260		9.1	U		10	U		9.8	U		9.1	U	
AROCLOR-1268		9.1	U		10	U		9.8	U		9.1	U	
BETA-BHC		0.88	U		1	U		0.98	U		0.91	U	
DELTA-BHC		0.88	U		1	U		0.98	U		0.91	U	
DIELDRIN		1.7	U		0.52	J	P	1.9	U		1.8	U	
ENDOSULFAN I		0.88	U		1	U		0.98	U		0.91	U	
ENDOSULFAN II		1.7	U		0.84	J	PU	1.9	U		1.8	U	
ENDOSULFAN SULFATE		10			1.9	U		1.9	U		1.8	U	
ENDRIN		1.7	U		1.9	U		1.9	U		1.8	U	
ENDRIN ALDEHYDE		1.7	U		1.9	U		1.9	U		1.8	U	
ENDRIN KETONE		1.7	U		1.9	U		1.9	U		0.56	J	P
GAMMA-BHC (LINDANE)		0.88	UJ	G	1	U		0.98	U		0.91	U	
GAMMA-CHLORDANE		0.88	U		1	U		0.98	U		0.91	U	
HEPTACHLOR		0.88	U		1	U		0.98	U		0.91	U	
HEPTACHLOR EPOXIDE		0.88	U		1	U		0.98	U		0.91	U	
HEXACHLOROBENZENE		1.7	U		1.9	U		1.9	U		1.8	U	
METHOXYCHLOR		8.8	U		10	U		9.8	U		9.1	U	
TOXAPHENE		16	U		19	U		18	U		17	U	

PROJ_NO: 02124	NSAMPLE	B179-SB3-0001			B179-SB3-0709			B179-SB-DUP01			B179-SB-DUP02		
SDG: WE19-7	LAB_ID	SD4698-11			SD4698-13			SD4698-15			SD4698-5		
FRACTION: PEST/PCB	SAMP_DATE	7/27/2010			7/27/2010			7/27/2010			7/27/2010		
MEDIA: SOIL	QC_TYPE	NM			NM			FD			FD		
	UNITS	UG/KG			UG/KG			UG/KG			UG/KG		
	PCT_SOLIDS	96.8			90.7			95.5			88.1		
	DUP_OF							B179-SB3-0001			B179-SB1-0001		
PARAMETER		RESULT	VQL	QLCD	RESULT	VQL	QLCD	RESULT	VQL	QLCD	RESULT	VQL	QLCD
4,4'-DDD		1.7	U		1.7	U		1.6	U		1.8	U	
4,4'-DDE		0.38	J	PU	1.7	U		0.41	J	P	1.4	J	PU
4,4'-DDT		1.7	U		1.7	U		0.79	J	PU	5.7	UJ	U
ALDRIN		0.86	U		0.9	U		0.85	U		0.91	U	
ALPHA-BHC		0.86	U		0.9	U		0.85	U		0.91	U	
ALPHA-CHLORDANE		0.86	U		0.9	U		0.85	U		0.91	U	
AROCLOR-1016		8.6	U		9	U		8.5	U		9.1	U	
AROCLOR-1221		8.6	U		9	U		8.5	U		9.1	U	
AROCLOR-1232		10	U		10	U		10	U		11	U	
AROCLOR-1242		8.6	U		9	U		8.5	U		9.1	U	
AROCLOR-1248		8.6	U		9	U		8.5	U		9.1	U	
AROCLOR-1254		8.6	U		9	U		8.5	U		9.1	U	
AROCLOR-1260		8.6	U		9	U		8.5	U		9.1	U	
AROCLOR-1268		8.6	U		9	U		8.5	U		9.1	U	
BETA-BHC		0.86	U		0.9	U		0.85	U		0.91	U	
DELTA-BHC		0.86	U		0.9	U		0.85	U		0.91	U	
DIELDRIN		0.7	J	PU	1.7	U		0.74	J	PU	1.8	U	
ENDOSULFAN I		0.86	U		0.9	U		0.85	U		0.91	U	
ENDOSULFAN II		1.7	U		1.7	U		1.6	U		1.8	U	
ENDOSULFAN SULFATE		1.3	J	P	1.7	U		1.4	J	P	12		
ENDRIN		1.7	U		1.7	U		1.6	U		1.8	U	
ENDRIN ALDEHYDE		1.7	U		1.7	U		1.6	U		1.8	U	
ENDRIN KETONE		1.7	U		1.7	U		1.6	U		1.8	U	
GAMMA-BHC (LINDANE)		0.86	U		0.9	U		0.85	U		17	J	G
GAMMA-CHLORDANE		0.86	U		0.9	U		0.85	U		0.91	U	
HEPTACHLOR		0.86	U		0.9	U		0.85	U		0.91	U	
HEPTACHLOR EPOXIDE		0.86	U		0.9	U		0.85	U		0.91	U	
HEXACHLOROBENZENE		0.34	J	P	1.7	U		1.6	U		1.8	U	
METHOXYCHLOR		8.6	U		9	U		8.5	U		9.1	U	
TOXAPHENE		16	U		17	U		16	U		17	U	

Tetra Tech NUS **INTERNAL CORRESPONDENCE**

TO: **J. FORRELLI** **DATE: AUGUST 18, 2010**

FROM: **EDWARD SEDLMYER** **COPIES: DV FILE**

SUBJECT: **ORGANIC DATA VALIDATION: 1,2-PROPYLENE GLYCOL DINITRATE (PGDN)**
NAVSTA NEWPORT, CTO WE19
SDG 61902

SAMPLES: 1/Aqueous

DA-MW104B-061810

Overview

The sample set for NAVSTA NEWPORT, CTO WE19, SDG 61902 consists of one (1) environmental aqueous sample. The environmental sample was analyzed for 1,2-propylene glycol dinitrate (PGDN).

The sample was collected by Tetra Tech NUS, Inc. on June 18, 2010 and analyzed by APPL Inc. All analyses were conducted in accordance with Naval Facilities Engineering Service Center (NFESC) Quality Assurance/Quality Control (QA/QC) criteria using USEPA SW-846 Method 8330B analytical and reporting protocol. A Tier II data validation was performed on the sample. The data contained in this SDG were validated with regard to the following parameters:

* • Data Completeness
* • Holding Times
* • Initial and Continuing Calibration
* • Laboratory Method and/or Field Quality Control Blanks
* • Surrogate Spike Recoveries
* • Blank Spike / Blank Spike Duplicate Recoveries
* • Matrix Spike/Matrix Spike Duplicate Results
* • Detection Limits

The asterisk (*) indicates that all quality control criteria were met for this parameter. Qualified (if applicable) analytical results are summarized in Appendix A. Results as reported by the laboratory are presented in Appendix B. Appendix C contains Region I worksheets, and Appendix D contains the documentation to support the findings as discussed in this data validation report.

ADDITIONAL COMMENTS

No data quality noncompliances were noted for this SDG that required qualification of the data.

OVERALL ASSESSMENT

Laboratory Performance: None.

Other Factors Affecting Data Quality: None.

The data for these analyses were reviewed with reference to the Region I EPA "Data Validation Functional Guidelines - Part II" (12/96) and the Department of Defense (DoD) document entitled "Quality Systems Manual (QSM) for Environmental Laboratories" (January 2006).

TetraTech NUS
Edward Sedlmyer
Chemist/Data Validator

TetraTech NUS
Joseph A. Samchuck
Data Validation Quality Assurance Officer

Attachments:

1. Appendix A - Qualified Analytical Results
2. Appendix B - Results as Reported by the Laboratory
3. Appendix C - Regional Worksheets
4. Appendix D - Support Documentation

APPENDIX A

QUALIFIED LABORATORY RESULTS

Data Validation Qualifier Codes:

A = Lab Blank Contamination
B = Field Blank Contamination
C = Calibration Noncompliance (e.g. % RSDs, %Ds, ICVs, CCVs, RRFs, etc.)
C01 = GC/MS Tuning Noncompliance
D = MS/MSD Recovery Noncompliance
E = LCS/LCSD Recovery Noncompliance
F = Lab Duplicate Imprecision
G = Field Duplicate Imprecision
H = Holding Time Exceedance
I = ICP Serial Dilution Noncompliance
J = GFAA PDS - GFAA MSA's $r < 0.995$ / ICP PDS Recovery Noncompliance
K = ICP Interference - includes ICS % R Noncompliance
L = Instrument Calibration Range Exceedance
M = Sample Preservation Noncompliance
N = Internal Standard Noncompliance
N01 = Internal Standard Recovery Noncompliance Dioxins
N02 = Recovery Standard Noncompliance Dioxins
N03 = Clean-up Standard Noncompliance Dioxins
O = Poor Instrument Performance (e.g. base-line drifting)
P = Uncertainty near detection limit (< 2 x IDL for inorganics and <CRQL for organics)
Q = Other problems (can encompass a number of issues; e.g. chromatography,interferences, etc.)
R = Surrogates Recovery Noncompliance
S = Pesticide/PCB Resolution
T = % Breakdown Noncompliance for DDT and Endrin
U = % Difference between columns/detectors >25% for positive results determined via GC/HPLC
V = Non-linear calibrations; correlation coefficient $r < 0.995$
W = EMPC result
X = Signal to noise response drop
Y = Percent solids <30%
Z = Uncertainty at 2 sigma deviation is greater than sample activity

PROJ_NO: 02124	NSAMPLE	DA-MW104B-061810		
SDG: 61902	LAB_ID	AY17078		
FRACTION: EXP	SAMP_DATE	6/18/2010		
MEDIA: WATER	QC_TYPE	NM		
	UNITS	UG/L		
	PCT_SOLIDS	0.0		
	DUP_OF			
PARAMETER		RESULT	VQL	QLCD
1,2-PROPYLENE GLYCOL DINITRATE		0.1	U	

APPENDIX B

RESULTS AS REPORTED BY THE LABORATORY

EPA 8330B PGDN-Water

Tetra Tech NUS, inc.
55 Jonspin Rd
Wilmington, MA 01887

Attn: Dabra Seiken

Project: 112G02124 Site 08 NUSC, CTO WE 19

Sample ID: DA-MW-122-063010

Sample Collection Date: 06/30/10

APPL Inc.
908 North Temperance Avenue
Clovis, CA 93611

ARF: 61996

APPL ID: AY17578

QCG: #PGDNW-100706B-144858

Method	Analyte	Result	LOQ	LOD	DL	Units	Extraction Date	Analysis Date
EPA 8330	Propylene glycol dinitrate (PGDN)	0.100 U	0.20	0.100	0.050	ug/L	07/06/10	07/08/10
EPA 8330	Surrogate: 1,2-Dinitrobenzene (S)	90.9	70-130			%	07/06/10	07/08/10

Quant Method: PGDNPFP2.M
Run #: 0708_016.D
Instrument: FRANK
Sequence: 100703
Dilution Factor: 1
Initials: RJB

Printed: 07/15/10 10:18:30 AM
APPL-F1-SC-NoMC-REG MDLs

Tetra Tech NUS **INTERNAL CORRESPONDENCE**

TO: **J. FORRELLI** **DATE: AUGUST 18, 2010**

FROM: **EDWARD SEDLMYER** **COPIES: DV FILE**

SUBJECT: **ORGANIC DATA VALIDATION: 1,2-PROPYLENE GLYCOL DINITRATE (PGDN)**
NAVSTA NEWPORT, CTO WE19
SDG 61952

SAMPLES: 2/Aqueous

DA-MW101B-062310 DA-MW7A-062310

Overview

The sample set for NAVSTA NEWPORT, CTO WE19, SDG 61952 consists of two (2) environmental aqueous samples. All environmental samples were analyzed for 1,2-propylene glycol dinitrate (PGDN).

The samples were collected by Tetra Tech NUS, Inc. on June 23, 2010 and analyzed by APPL Inc. All analyses were conducted in accordance with Naval Facilities Engineering Service Center (NFESC) Quality Assurance/Quality Control (QA/QC) criteria using USEPA SW-846 Method 8330B analytical and reporting protocol. A Tier II data validation was performed on all samples. The data contained in this SDG were validated with regard to the following parameters:

* • Data Completeness
* • Holding Times
* • Initial and Continuing Calibration
* • Laboratory Method and/or Field Quality Control Blanks
* • Surrogate Spike Recoveries
* • Blank Spike / Blank Spike Duplicate Recoveries
* • Matrix Spike/Matrix Spike Duplicate Results
* • Detection Limits

The asterisk (*) indicates that all quality control criteria were met for this parameter. Qualified (if applicable) analytical results are summarized in Appendix A. Results as reported by the laboratory are presented in Appendix B. Appendix C contains Region I worksheets, and Appendix D contains the documentation to support the findings as discussed in this data validation report.

ADDITIONAL COMMENTS

No data quality noncompliances were noted for this SDG that required qualification of the data.

OVERALL ASSESSMENT

Laboratory Performance: None.

Other Factors Affecting Data Quality: None.

The data for these analyses were reviewed with reference to the Region I EPA "Data Validation Functional Guidelines - Part II" (12/96) and the Department of Defense (DoD) document entitled "Quality Systems Manual (QSM) for Environmental Laboratories" (January 2006).

TetraTech NUS
Edward Sedlmyer
Chemist/Data Validator

TetraTech NUS
Joseph A. Samchuck
Data Validation Quality Assurance Officer

Attachments:

1. Appendix A - Qualified Analytical Results
2. Appendix B - Results as Reported by the Laboratory
3. Appendix C - Regional Worksheets
4. Appendix D - Support Documentation

APPENDIX A

QUALIFIED LABORATORY RESULTS

Data Validation Qualifier Codes:

A = Lab Blank Contamination
B = Field Blank Contamination
C = Calibration Noncompliance (e.g. % RSDs, %Ds, ICVs, CCVs, RRFs, etc.)
C01 = GC/MS Tuning Noncompliance
D = MS/MSD Recovery Noncompliance
E = LCS/LCSD Recovery Noncompliance
F = Lab Duplicate Imprecision
G = Field Duplicate Imprecision
H = Holding Time Exceedance
I = ICP Serial Dilution Noncompliance
J = GFAA PDS - GFAA MSA's $r < 0.995$ / ICP PDS Recovery Noncompliance
K = ICP Interference - includes ICS % R Noncompliance
L = Instrument Calibration Range Exceedance
M = Sample Preservation Noncompliance
N = Internal Standard Noncompliance
N01 = Internal Standard Recovery Noncompliance Dioxins
N02 = Recovery Standard Noncompliance Dioxins
N03 = Clean-up Standard Noncompliance Dioxins
O = Poor Instrument Performance (e.g. base-line drifting)
P = Uncertainty near detection limit (< 2 x IDL for inorganics and <CRQL for organics)
Q = Other problems (can encompass a number of issues; e.g. chromatography,interferences, etc.)
R = Surrogates Recovery Noncompliance
S = Pesticide/PCB Resolution
T = % Breakdown Noncompliance for DDT and Endrin
U = % Difference between columns/detectors >25% for positive results determined via GC/HPLC
V = Non-linear calibrations; correlation coefficient $r < 0.995$
W = EMPC result
X = Signal to noise response drop
Y = Percent solids <30%
Z = Uncertainty at 2 sigma deviation is greater than sample activity

PROJ_NO: 02124	NSAMPLE	DA-MW101B-062310			DA-MW7A-062310		
SDG: 61952	LAB_ID	AY17296			AY17295		
FRACTION: EXP	SAMP_DATE	6/23/2010			6/23/2010		
MEDIA: WATER	QC_TYPE	NM			NM		
	UNITS	UG/L			UG/L		
	PCT_SOLIDS	0.0			0.0		
	DUP_OF						
PARAMETER		RESULT	VQL	QLCD	RESULT	VQL	QLCD
1,2-PROPYLENE GLYCOL DINITRATE		0.1	U		0.1	U	

APPENDIX B

RESULTS AS REPORTED BY THE LABORATORY

EPA 8330B PGDN-Water

Tetra Tech NUS, inc.
55 Jonspin Rd
Wilmington, MA 01887

Attn: Lucy Guzman

APPL Inc.
908 North Temperance Avenue
Clovis, CA 93611

Project: 112G02124 Site 08 NUSC, CTO WE 19

ARF: 61952

Sample ID: DA-MW101B-062310

APPL ID: AY17296

Sample Collection Date: 06/23/10

QCG: #PGDNW-100628A-144629

Method	Analyte	Result	LOQ	LOD	DL	Units	Extraction Date	Analysis Date
EPA 8330	Propylene glycol dinitrate (PGDN)	0.100 U	0.20	0.100	0.050	ug/L	06/28/10	07/06/10
EPA 8330	Surrogate: 1,2-Dinitrobenzene (S)	103	70-130			%	06/28/10	07/06/10

Quant Method:	PGDNARO2.M
Run #:	0706_034.D
Instrument:	FRANK
Sequence:	100706
Dilution Factor:	1
Initials:	RJB

Printed: 07/14/10 8:46:52 AM
APPL-F1-SC-NoMC-REG MDLs

EPA 8330B PGDN-Water

Tetra Tech NUS, inc.
55 Jonspin Rd
Wilmington, MA 01887

Attn: Lucy Guzman
Project: 112G02124 Site 08 NUSC, CTO WE 19
Sample ID: DA-MW7A-062310
Sample Collection Date: 06/23/10

APPL Inc.
908 North Temperance Avenue
Clovis, CA 93611

ARF: 61952
APPL ID: AY17295
QCG: #PGDNW-100628A-144629

Method	Analyte	Result	LOQ	LOD	DL	Units	Extraction Date	Analysis Date
EPA 8330	Propylene glycol dinitrate (PGDN)	0.40 U	0.40	0.100	0.050	ug/L	06/28/10	07/06/10
EPA 8330	Surrogate: 1,2-Dinitrobenzene (S)	124	70-130			%	06/28/10	07/06/10

Quant Method: PGDNARO2.M
Run #: 0706_033.D
Instrument: FRANK
Sequence: 100706
Dilution Factor: 1
Initials: RJB

Printed: 07/16/10 11:09:54 AM
APPL-F1-SC-MCRes/MCPQL-REG MDLs

Tetra Tech NUS **INTERNAL CORRESPONDENCE**

TO: **J. FORRELLI** **DATE: AUGUST 18, 2010**

FROM: **EDWARD SEDLMYER** **COPIES: DV FILE**

SUBJECT: **ORGANIC DATA VALIDATION: 1,2-PROPYLENE GLYCOL DINITRATE (PGDN)**
NAVSTA NEWPORT, CTO WE19
SDG 61927

SAMPLES: 1/Aqueous

DA-MW7B-062210

Overview

The sample set for NAVSTA NEWPORT, CTO WE19, SDG 61927 consists of one (1) environmental aqueous sample. The environmental sample was analyzed for 1,2-propylene glycol dinitrate (PGDN).

The sample was collected by Tetra Tech NUS, Inc. on June 22, 2010 and analyzed by APPL Inc. All analyses were conducted in accordance with Naval Facilities Engineering Service Center (NFESC) Quality Assurance/Quality Control (QA/QC) criteria using USEPA SW-846 Method 8330B analytical and reporting protocol. A Tier II data validation was performed on the sample. The data contained in this SDG were validated with regard to the following parameters:

* • Data Completeness
* • Holding Times
* • Initial and Continuing Calibration
* • Laboratory Method and/or Field Quality Control Blanks
* • Surrogate Spike Recoveries
* • Blank Spike / Blank Spike Duplicate Recoveries
* • Matrix Spike/Matrix Spike Duplicate Results
* • Detection Limits

The asterisk (*) indicates that all quality control criteria were met for this parameter. Qualified (if applicable) analytical results are summarized in Appendix A. Results as reported by the laboratory are presented in Appendix B. Appendix C contains Region I worksheets, and Appendix D contains the documentation to support the findings as discussed in this data validation report.

No data quality noncompliances were noted for this SDG that required qualification of the data.

ADDITIONAL COMMENTS

No data quality noncompliances were noted for this SDG that required qualification of the data.

OVERALL ASSESSMENT

Laboratory Performance: None.

Other Factors Affecting Data Quality: None.

The data for these analyses were reviewed with reference to the Region I EPA "Data Validation Functional Guidelines - Part II" (12/96) and the Department of Defense (DoD) document entitled "Quality Systems Manual (QSM) for Environmental Laboratories" (January 2006).

TetraTech NUS
Edward Sedlmyer
Chemist/Data Validator

TetraTech NUS
Joseph A. Samchuck
Data Validation Quality Assurance Officer

Attachments:

1. Appendix A - Qualified Analytical Results
2. Appendix B - Results as Reported by the Laboratory
3. Appendix C - Regional Worksheets
4. Appendix D - Support Documentation

APPENDIX A

QUALIFIED LABORATORY RESULTS

Data Validation Qualifier Codes:

A = Lab Blank Contamination
B = Field Blank Contamination
C = Calibration Noncompliance (e.g. % RSDs, %Ds, ICVs, CCVs, RRFs, etc.)
C01 = GC/MS Tuning Noncompliance
D = MS/MSD Recovery Noncompliance
E = LCS/LCSD Recovery Noncompliance
F = Lab Duplicate Imprecision
G = Field Duplicate Imprecision
H = Holding Time Exceedance
I = ICP Serial Dilution Noncompliance
J = GFAA PDS - GFAA MSA's $r < 0.995$ / ICP PDS Recovery Noncompliance
K = ICP Interference - includes ICS % R Noncompliance
L = Instrument Calibration Range Exceedance
M = Sample Preservation Noncompliance
N = Internal Standard Noncompliance
N01 = Internal Standard Recovery Noncompliance Dioxins
N02 = Recovery Standard Noncompliance Dioxins
N03 = Clean-up Standard Noncompliance Dioxins
O = Poor Instrument Performance (e.g. base-line drifting)
P = Uncertainty near detection limit (< 2 x IDL for inorganics and <CRQL for organics)
Q = Other problems (can encompass a number of issues; e.g. chromatography,interferences, etc.)
R = Surrogates Recovery Noncompliance
S = Pesticide/PCB Resolution
T = % Breakdown Noncompliance for DDT and Endrin
U = % Difference between columns/detectors >25% for positive results determined via GC/HPLC
V = Non-linear calibrations; correlation coefficient $r < 0.995$
W = EMPC result
X = Signal to noise response drop
Y = Percent solids <30%
Z = Uncertainty at 2 sigma deviation is greater than sample activity

PROJ_NO: 02124	NSAMPLE	DA-MW7B-062210		
SDG: 61927	LAB_ID	AY17198		
FRACTION: EXP	SAMP_DATE	6/22/2010		
MEDIA: WATER	QC_TYPE	NM		
	UNITS	UG/L		
	PCT_SOLIDS	0.0		
	DUP_OF			
PARAMETER		RESULT	VQL	QLCD
1,2-PROPYLENE GLYCOL DINITRATE		0.1	U	

APPENDIX B

RESULTS AS REPORTED BY THE LABORATORY

EPA 8330B PGDN-Water

Tetra Tech NUS, Inc.
55 Jonspin Rd
Wilmington, MA 01887

Attn: Lucy Guzman

APPL Inc.
908 North Temperance Avenue
Clovis, CA 93611

Project: 112G02124 Site 08 NUSC, CTO WE 19
Sample ID: DA-MW7B-062210
Sample Collection Date: 06/22/10

ARF: 61927
APPL ID: AY17198
QCG: #PGDNW-100628A-144629

Method	Analyte	Result	LOQ	LOD	DL	Units	Extraction Date	Analysis Date
EPA 8330	Propylene glycol dinitrate (PGDN)	0.100 U	0.20	0.100	0.050	ug/L	06/28/10	07/07/10
EPA 8330	Surrogate: 1,2-Dinitrobenzene (S)	90.2	70-130			%	06/28/10	07/07/10

Quant Method: PGDNARO2.M
Run #: 0706_032.D
Instrument: FRANK
Sequence: 100706
Dilution Factor: 1
Initials: RJB

Printed: 07/12/10 10:35:26 AM
APPL-F1-SC-NoMC-REG MDLs

Tetra Tech NUS **INTERNAL CORRESPONDENCE**

TO: **J. FORRELLI** **DATE: AUGUST 18, 2010**

FROM: **EDWARD SEDLMYER** **COPIES: DV FILE**

SUBJECT: **ORGANIC DATA VALIDATION: 1,2-PROPYLENE GLYCOL DINITRATE (PGDN)**
NAVSTA NEWPORT, CTO WE19
SDG 61979

SAMPLES: 6/Aqueous

DA-MW-03B-062810 DA-MW-09B-062910 DA-MW-105B-062810
DA-MW-11-062910 DA-MW-DUP01-062810 DA-MW-DUP02-062910

Overview

The sample set for NAVSTA NEWPORT, CTO WE19, SDG 61979 consists of six (6) environmental aqueous samples. Two field duplicates were associated with this SDG: DA-MW-03B-062810 / DA-MW-DUP01-062810 and DA-MW-11-062910 / DA-MW-DUP02-062910. All environmental samples were analyzed for 1,2-propylene glycol dinitrate (PGDN).

The samples were collected by Tetra Tech NUS, Inc. on June 28 and 29, 2010 and analyzed by APPL Inc. All analyses were conducted in accordance with Naval Facilities Engineering Service Center (NFESC) Quality Assurance/Quality Control (QA/QC) criteria using USEPA SW-846 Method 8330B analytical and reporting protocol. A Tier II data validation was performed on all samples. The data contained in this SDG were validated with regard to the following parameters:

* • Data Completeness
* • Holding Times
* • Initial and Continuing Calibration
* • Laboratory Method and/or Field Quality Control Blanks
* • Surrogate Spike Recoveries
* • Blank Spike / Blank Spike Duplicate Recoveries
* • Matrix Spike/Matrix Spike Duplicate Results
* • Detection Limits

The asterisk (*) indicates that all quality control criteria were met for this parameter. Qualified (if applicable) analytical results are summarized in Appendix A. Results as reported by the laboratory are presented in Appendix B. Appendix C contains Region I worksheets, and Appendix D contains the documentation to support the findings as discussed in this data validation report.

ADDITIONAL COMMENTS

No data quality noncompliances were noted for this SDG that required qualification of the data.

OVERALL ASSESSMENT

Laboratory Performance: None.

Other Factors Affecting Data Quality: None.

The data for these analyses were reviewed with reference to the Region I EPA "Data Validation Functional Guidelines - Part II" (12/96) and the Department of Defense (DoD) document entitled "Quality Systems Manual (QSM) for Environmental Laboratories" (January 2006).

TetraTech NUS
Edward Sedlmyer
Chemist/Data Validator

TetraTech NUS
Joseph A. Samchuck
Data Validation Quality Assurance Officer

Attachments:

1. Appendix A - Qualified Analytical Results
2. Appendix B - Results as Reported by the Laboratory
3. Appendix C - Regional Worksheets
4. Appendix D - Support Documentation

APPENDIX A

QUALIFIED LABORATORY RESULTS

Data Validation Qualifier Codes:

A = Lab Blank Contamination
B = Field Blank Contamination
C = Calibration Noncompliance (e.g. % RSDs, %Ds, ICVs, CCVs, RRFs, etc.)
C01 = GC/MS Tuning Noncompliance
D = MS/MSD Recovery Noncompliance
E = LCS/LCSD Recovery Noncompliance
F = Lab Duplicate Imprecision
G = Field Duplicate Imprecision
H = Holding Time Exceedance
I = ICP Serial Dilution Noncompliance
J = GFAA PDS - GFAA MSA's $r < 0.995$ / ICP PDS Recovery Noncompliance
K = ICP Interference - includes ICS % R Noncompliance
L = Instrument Calibration Range Exceedance
M = Sample Preservation Noncompliance
N = Internal Standard Noncompliance
N01 = Internal Standard Recovery Noncompliance Dioxins
N02 = Recovery Standard Noncompliance Dioxins
N03 = Clean-up Standard Noncompliance Dioxins
O = Poor Instrument Performance (e.g. base-line drifting)
P = Uncertainty near detection limit (< 2 x IDL for inorganics and <CRQL for organics)
Q = Other problems (can encompass a number of issues; e.g. chromatography,interferences, etc.)
R = Surrogates Recovery Noncompliance
S = Pesticide/PCB Resolution
T = % Breakdown Noncompliance for DDT and Endrin
U = % Difference between columns/detectors >25% for positive results determined via GC/HPLC
V = Non-linear calibrations; correlation coefficient $r < 0.995$
W = EMPC result
X = Signal to noise response drop
Y = Percent solids <30%
Z = Uncertainty at 2 sigma deviation is greater than sample activity

PROJ_NO: 02124	NSAMPLE	DA-MW-03B-062810			DA-MW-09B-062910			DA-MW-105B-062810			DA-MW-11-062910		
SDG: 61979	LAB_ID	AY17502			AY17504			AY17501			AY17505		
FRACTION: EXP	SAMP_DATE	6/28/2010			6/29/2010			6/28/2010			6/29/2010		
MEDIA: WATER	QC_TYPE	NM			NM			NM			NM		
	UNITS	UG/L			UG/L			UG/L			UG/L		
	PCT_SOLIDS	0.0			0.0			0.0			0.0		
	DUP_OF												
PARAMETER		RESULT	VQL	QLCD	RESULT	VQL	QLCD	RESULT	VQL	QLCD	RESULT	VQL	QLCD
1,2-PROPYLENE GLYCOL DINITRATE		0.1	U		0.1	U		0.1	U		0.1	U	

PROJ_NO: 02124 SDG: 61979 FRACTION: EXP MEDIA: WATER	NSAMPLE	DA-MW-DUP01-062810			DA-MW-DUP02-062910		
	LAB_ID	AY17503			AY17506		
	SAMP_DATE	6/28/2010			6/29/2010		
	QC_TYPE	NM			NM		
	UNITS	UG/L			UG/L		
	PCT_SOLIDS	0.0			0.0		
	DUP_OF	DA-MW-03B-062810			DA-MW-11-062910		
PARAMETER		RESULT	VQL	QLCD	RESULT	VQL	QLCD
1,2-PROPYLENE GLYCOL DINITRATE		0.1	U		0.1	U	

APPENDIX B

RESULTS AS REPORTED BY THE LABORATORY

EPA 8330B PGDN-Water

Tetra Tech NUS, inc.
55 Jonspin Rd
Wilmington, MA 01887

Attn: Lucy Guzman

APPL Inc.
908 North Temperance Avenue
Clovis, CA 93611

Project: 112G02124 NUSC Site 08 CTO WE19

ARF: 61979

Sample ID: DA-MW-03B-062810

APPL ID: AY17502

Sample Collection Date: 06/28/10

QCG: #PGDNW-100701A-144630

Method	Analyte	Result	LOQ	LOD	DL	Units	Extraction Date	Analysis Date
EPA 8330	Propylene glycol dinitrate (PGDN)	0.100 U	0.20	0.100	0.050	ug/L	07/01/10	07/06/10
EPA 8330	Surrogate: 1,2-Dinitrobenzene (S)	110	70-130			%	07/01/10	07/06/10

Quant Method:	PGDNARO2.M
Run #:	0706_037.D
Instrument:	FRANK
Sequence:	100706
Dilution Factor:	1
Initials:	RJB

Printed: 07/19/10 2:28:06 PM
APPL-F1-SC-MCRes/MCPQL-REG MDLs

EPA 8330B PGDN-Water

Tetra Tech NUS, inc.
55 Jonspin Rd
Wilmington, MA 01887

Attn: Lucy Guzman

APPL Inc.
908 North Temperance Avenue
Clovis, CA 93611

Project: 112G02124 NUSC Site 08 CTO WE19
Sample ID: DA-MW-09B-062910
Sample Collection Date: 06/29/10

ARF: 61979
APPL ID: AY17504
QCG: #PGDNW-100701A-144630

Method	Analyte	Result	LOQ	LOD	DL	Units	Extraction Date	Analysis Date
EPA 8330	Propylene glycol dinitrate (PGDN)	0.100 U	0.20	0.100	0.050	ug/L	07/01/10	07/06/10
EPA 8330	Surrogate: 1,2-Dinitrobenzene (S)	105	70-130			%	07/01/10	07/06/10

Quant Method: PGDNARO2.M
Run #: 0706_039.D
Instrument: FRANK
Sequence: 100706
Dilution Factor: 1
Initials: RJB

Printed: 07/19/10 2:28:06 PM
APPL-F1-SC-MCRes/MCPQL-REG MDLs

EPA 8330B PGDN-Water

Tetra Tech NUS, inc.
55 Jonspin Rd
Wilmington, MA 01887

Attn: Lucy Guzman

APPL Inc.
908 North Temperance Avenue
Clovis, CA 93611

Project: 112G02124 NUSC Site 08 CTO WE19
Sample ID: DA-MW-105B-062810
Sample Collection Date: 06/28/10

ARF: 61979
APPL ID: AY17501
QCG: #PGDNW-100701A-144630

Method	Analyte	Result	LOQ	LOD	DL	Units	Extraction Date	Analysis Date
EPA 8330	Propylene glycol dinitrate (PGDN)	0.100 U	0.20	0.100	0.050	ug/L	07/01/10	07/06/10
EPA 8330	Surrogate: 1,2-Dinitrobenzene (S)	108	70-130			%	07/01/10	07/06/10

Quant Method: PGDNARO2.M
Run #: 0706_036.D
Instrument: FRANK
Sequence: 100706
Dilution Factor: 1
Initials: RJB

Printed: 07/19/10 2:28:06 PM
APPL-F1-SC-MCRes/MCPQL-REG MDLs

EPA 8330B PGDN-Water

Tetra Tech NUS, inc.
55 Jonspin Rd
Wilmington, MA 01887

APPL Inc.
908 North Temperance Avenue
Clovis, CA 93611

Attn: Lucy Guzman

Project: 112G02124 NUSC Site 08 CTO WE19

ARF: 61979

Sample ID: DA-MW-11-062910

APPL ID: AY17505

Sample Collection Date: 06/29/10

QCG: #PGDNW-100701A-144630

Method	Analyte	Result	LOQ	LOD	DL	Units	Extraction Date	Analysis Date
EPA 8330	Propylene glycol dinitrate (PGDN)	0.100 U	0.20	0.100	0.050	ug/L	07/01/10	07/06/10
EPA 8330	Surrogate: 1,2-Dinitrobenzene (S)	94.9	70-130			%	07/01/10	07/06/10

Quant Method:	PGDNARO2.M
Run #:	0706_040.D
Instrument:	FRANK
Sequence:	100706
Dilution Factor:	1
Initials:	RJB

Printed: 07/19/10 2:28:06 PM

APPL-F1-SC-MCRes/MCPQL-REG MDLs

EPA 8330B PGDN-Water

Tetra Tech NUS, Inc.
55 Jonspin Rd
Wilmington, MA 01887

Attn: Lucy Guzman

APPL Inc.
908 North Temperance Avenue
Clovis, CA 93611

Project: 112G02124 NUSC Site 08 CTO WE19
Sample ID: DA-MW-DUP01-062810
Sample Collection Date: 06/28/10

ARF: 61979
APPL ID: AY17503
QCG: #PGDNW-100701A-144630

Method	Analyte	Result	LOQ	LOD	DL	Units	Extraction Date	Analysis Date
EPA 8330	Propylene glycol dinitrate (PGDN)	0.100 U	0.20	0.100	0.050	ug/L	07/01/10	07/06/10
EPA 8330	Surrogate: 1,2-Dinitrobenzene (S)	98.7	70-130			%	07/01/10	07/06/10

Quant Method: PGDNARO2.M
Run #: 0706_038.D
Instrument: FRANK
Sequence: 100706
Dilution Factor: 1
Initials: RJB

Printed: 07/19/10 2:28:06 PM
APPL-F1-SC-MCRes/MCPQL-REG MDLs

EPA 8330B PGDN-Water

Tetra Tech NUS, inc.
55 Jonspin Rd
Wilmington, MA 01887

Attn: Lucy Guzman

APPL Inc.
908 North Temperance Avenue
Clovis, CA 93611

Project: 112G02124 NUSC Site 08 CTO WE19

ARF: 61979

Sample ID: DA-MW-DUP02-062910

APPL ID: AY17506

Sample Collection Date: 06/29/10

QCG: #PGDNW-100701A-144630

Method	Analyte	Result	LOQ	LOD	DL	Units	Extraction Date	Analysis Date
EPA 8330	Propylene glycol dinitrate (PGDN)	0.100 U	0.20	0.100	0.050	ug/L	07/01/10	07/07/10
EPA 8330	Surrogate: 1,2-Dinitrobenzene (S)	90.3	70-130			%	07/01/10	07/07/10

Quant Method:	PGDNARO2.M
Run #:	0706_041.D
Instrument:	FRANK
Sequence:	100706
Dilution Factor:	1
Initials:	RJB

Printed: 07/19/10 2:28:06 PM

APPL-F1-SC-MCRes/MCPQL-REG MDLs

Tetra Tech NUS **INTERNAL CORRESPONDENCE**

TO: **J. FORRELLI** **DATE: AUGUST 18, 2010**

FROM: **EDWARD SEDLMYER** **COPIES: DV FILE**

SUBJECT: **ORGANIC DATA VALIDATION: 1,2-PROPYLENE GLYCOL DINITRATE (PGDN)**
NAVSTA NEWPORT, CTO WE19
SDG 61996

SAMPLES: 4/Aqueous

DA-MW-103B-070110 DA-MW-12-060310 DA-MW-122-063010
DA-MW-13B-063010

Overview

The sample set for NAVSTA NEWPORT, CTO WE19, SDG 61996 consists of four (4) environmental aqueous samples. All environmental samples were analyzed for 1,2-propylene glycol dinitrate (PGDN).

The samples were collected by Tetra Tech NUS, Inc. on June 30 and July 1, 2010 and analyzed by APPL Inc. All analyses were conducted in accordance with Naval Facilities Engineering Service Center (NFESC) Quality Assurance/Quality Control (QA/QC) criteria using USEPA SW-846 Method 8330B analytical and reporting protocol. A Tier II data validation was performed on all samples. The data contained in this SDG were validated with regard to the following parameters:

* • Data Completeness
* • Holding Times
* • Initial and Continuing Calibration
* • Laboratory Method and/or Field Quality Control Blanks
* • Surrogate Spike Recoveries
* • Blank Spike / Blank Spike Duplicate Recoveries
* • Matrix Spike/Matrix Spike Duplicate Results
* • Detection Limits

The asterisk (*) indicates that all quality control criteria were met for this parameter. Qualified (if applicable) analytical results are summarized in Appendix A. Results as reported by the laboratory are presented in Appendix B. Appendix C contains Region I worksheets, and Appendix D contains the documentation to support the findings as discussed in this data validation report.

ADDITIONAL COMMENTS

No data quality noncompliances were noted for this SDG that required qualification of the data.

OVERALL ASSESSMENT

Laboratory Performance: None.

Other Factors Affecting Data Quality: None.

The data for these analyses were reviewed with reference to the Region I EPA "Data Validation Functional Guidelines - Part II" (12/96) and the Department of Defense (DoD) document entitled "Quality Systems Manual (QSM) for Environmental Laboratories" (January 2006).

TetraTech NUS
Edward Sedlmyer
Chemist/Data Validator

TetraTech NUS
Joseph A. Samchuck
Data Validation Quality Assurance Officer

Attachments:

1. Appendix A - Qualified Analytical Results
2. Appendix B - Results as Reported by the Laboratory
3. Appendix C - Regional Worksheets
4. Appendix D - Support Documentation

APPENDIX A

QUALIFIED LABORATORY RESULTS

Data Validation Qualifier Codes:

A = Lab Blank Contamination
B = Field Blank Contamination
C = Calibration Noncompliance (e.g. % RSDs, %Ds, ICVs, CCVs, RRFs, etc.)
C01 = GC/MS Tuning Noncompliance
D = MS/MSD Recovery Noncompliance
E = LCS/LCSD Recovery Noncompliance
F = Lab Duplicate Imprecision
G = Field Duplicate Imprecision
H = Holding Time Exceedance
I = ICP Serial Dilution Noncompliance
J = GFAA PDS - GFAA MSA's $r < 0.995$ / ICP PDS Recovery Noncompliance
K = ICP Interference - includes ICS % R Noncompliance
L = Instrument Calibration Range Exceedance
M = Sample Preservation Noncompliance
N = Internal Standard Noncompliance
N01 = Internal Standard Recovery Noncompliance Dioxins
N02 = Recovery Standard Noncompliance Dioxins
N03 = Clean-up Standard Noncompliance Dioxins
O = Poor Instrument Performance (e.g. base-line drifting)
P = Uncertainty near detection limit (< 2 x IDL for inorganics and <CRQL for organics)
Q = Other problems (can encompass a number of issues; e.g. chromatography,interferences, etc.)
R = Surrogates Recovery Noncompliance
S = Pesticide/PCB Resolution
T = % Breakdown Noncompliance for DDT and Endrin
U = % Difference between columns/detectors >25% for positive results determined via GC/HPLC
V = Non-linear calibrations; correlation coefficient $r < 0.995$
W = EMPC result
X = Signal to noise response drop
Y = Percent solids <30%
Z = Uncertainty at 2 sigma deviation is greater than sample activity

PROJ_NO: 02124 SDG: 61996 FRACTION: EXP MEDIA: WATER	NSAMPLE	DA-MW-103B-070110			DA-MW-12-063010			DA-MW-122-063010			DA-MW-13B-063010		
	LAB_ID	AY17581			AY17579			AY17578			AY17580		
	SAMP_DATE	7/1/2010			6/30/2010			6/30/2010			6/30/2010		
	QC_TYPE	NM			NM			NM			NM		
	UNITS	UG/L			UG/L			UG/L			UG/L		
	PCT_SOLIDS	0.0			0.0			0.0			0.0		
	DUP_OF												
PARAMETER		RESULT	VQL	QLCD	RESULT	VQL	QLCD	RESULT	VQL	QLCD	RESULT	VQL	QLCD
1,2-PROPYLENE GLYCOL DINITRATE		0.1	U		0.1	U		0.1	U		0.1	U	

APPENDIX B

RESULTS AS REPORTED BY THE LABORATORY

EPA 8330B PGDN-Water

Tetra Tech NUS, inc.
55 Jonspin Rd
Wilmington, MA 01887

Attn: Dabra Seiken

APPL Inc.
908 North Temperance Avenue
Clovis, CA 93611

Project: 112G02124 Site 08 NUSC, CTO WE 19
Sample ID: DA-MW-103B-070110
Sample Collection Date: 07/01/10

ARF: 61996
APPL ID: AY17581
QCG: #PGDNW-100706B-144858

Method	Analyte	Result	LOQ	LOD	DL	Units	Extraction Date	Analysis Date
EPA 8330	Propylene glycol dinitrate (PGDN)	0.100 U	0.20	0.100	0.050	ug/L	07/06/10	07/08/10
EPA 8330	Surrogate: 1,2-Dinitrobenzene (S)	98.8	70-130			%	07/06/10	07/08/10

Quant Method: PGDNPFP2.M
Run #: 0708_019.D
Instrument: FRANK
Sequence: 100703
Dilution Factor: 1
Initials: RJB

Printed: 07/15/10 10:18:30 AM
APPL-F1-SC-NoMC-REG MDLs

EPA 8330B PGDN-Water

Tetra Tech NUS, inc.
55 Jonspin Rd
Wilmington, MA 01887

APPL Inc.
908 North Temperance Avenue
Clovis, CA 93611

Attn: Dabra Seiken
Project: 112G02124 Site 08 NUSC, CTO WE 19
Sample ID: DA-MW-12-063010
Sample Collection Date: 06/30/10

ARF: 61996
APPL ID: AY17579
QCG: #PGDNW-100706B-144858

Method	Analyte	Result	LOQ	LOD	DL	Units	Extraction Date	Analysis Date
EPA 8330	Propylene glycol dinitrate (PGDN)	0.100 U	0.20	0.100	0.050	ug/L	07/06/10	07/08/10
EPA 8330	Surrogate: 1,2-Dinitrobenzene (S)	92.5	70-130			%	07/06/10	07/08/10

Quant Method: PGDNPFP2.M
Run #: 0708_017.D
Instrument: FRANK
Sequence: 100703
Dilution Factor: 1
Initials: RJB

Printed: 07/15/10 10:18:30 AM
APPL-F1-SC-NoMC-REG MDLs

EPA 8330B PGDN-Water

Tetra Tech NUS, inc.
55 Jonspin Rd
Wilmington, MA 01887

Attn: Dabra Seiken

Project: 112G02124 Site 08 NUSC, CTO WE 19

Sample ID: DA-MW-122-063010

Sample Collection Date: 06/30/10

APPL Inc.
908 North Temperance Avenue
Clovis, CA 93611

ARF: 61996

APPL ID: AY17578

QCG: #PGDNW-100706B-144858

Method	Analyte	Result	LOQ	LOD	DL	Units	Extraction Date	Analysis Date
EPA 8330	Propylene glycol dinitrate (PGDN)	0.100 U	0.20	0.100	0.050	ug/L	07/06/10	07/08/10
EPA 8330	Surrogate: 1,2-Dinitrobenzene (S)	90.9	70-130			%	07/06/10	07/08/10

Quant Method: PGDNPFP2.M
Run #: 0708_016.D
Instrument: FRANK
Sequence: 100703
Dilution Factor: 1
Initials: RJB

Printed: 07/15/10 10:18:30 AM
APPL-F1-SC-NoMC-REG MDLs

EPA 8330B PGDN-Water

Tetra Tech NUS, inc.
55 Jonspin Rd
Wilmington, MA 01887

Attn: Dabra Selken ,

APPL Inc.
908 North Temperance Avenue
Clovis, CA 93611

Project: 112G02124 Site 08 NUSC, CTO WE 19
Sample ID: DA-MW-13B-063010
Sample Collection Date: 06/30/10

ARF: 61996
APPL ID: AY17580
QCG: #PGDNW-100706B-144858

Method	Analyte	Result	LOQ	LOD	DL	Units	Extraction Date	Analysis Date
EPA 8330	Propylene glycol dinitrate (PGDN)	0.100 U	0.20	0.100	0.050	ug/L	07/06/10	07/08/10
EPA 8330	Surrogate: 1,2-Dinitrobenzene (S)	94.7	70-130			%	07/06/10	07/08/10

Quant Method: PGDNPFP2.M
Run #: 0708_018.D
Instrument: FRANK
Sequence: 100703
Dilution Factor: 1
Initials: RJB

Printed: 07/15/10 10:18:30 AM
APPL-F1-SC-NoMC-REG MDLs

Tetra Tech NUS **INTERNAL CORRESPONDENCE**

TO: J. FORRELLI **DATE:** August 20, 2010

FROM: MEGAN CARSON **COPIES:** DV FILE

SUBJECT: ORGANIC DATA VALIDATION- VOC, SVOC, 1,4-DIOXANE, OVG, ANIONS, TOC, AMMOINA, CYANIDE
CTO WE19, NAVSTA NEWPORT
SAMPLE DELIVERY GROUP (SDG) WE19-1

SAMPLES: 17/Water/

DA-DW-15-0610	DA-DW-16-0610
DA-MW101B-062310	DA-MW104B-061810
DA-MW6A-062310	DA-MW6B-061710
DA-MW7A-062310	DA-MW7B-062210
DA-MW8B-062210	DA-SW-B179-01-0610
DA-SW-B179-02-0610	DA-SW-B179-04-0610
DA-SW-DUP01-062510	DA-TB01-061710
DA-TB02-062210	DA-TB04-062510
DA-TB062310	

OVERVIEW

The sample set for CTO WE19, NAVSTA Newport, SDG WE19-1, consists of thirteen (13) aqueous environmental samples and four (4) trip blanks. This SDG contained one field duplicate pair: DA-SW-DUP01-062510/DA-SW-B179-01-0610.

Samples DA-MW101B-062310, DA-MW104B-061810, DA-MW6A-062310, DA-MW6B-061710, DA-MW7A-062310, DA-MW7B-062210, DA-MW8B-062210, DA-TB01-061710, DA-TB02-062210, and DA-TB062310 were analyzed for volatile organic compounds (VOC). Samples DA-SW-B179-01-0610, DA-SW-B179-02-0610, DA-SW-B179-04-0610, and DA-SW-DUP01-062510 were analyzed for semi-volatile compounds (SVOC). Samples DA-DW-15-0610, DA-DW-16-0610, DA-MW101B-062310, DA-MW104B-061810, DA-MW7A-062310 DA-MW7B-062210, DA-SW-B179-01-0610, DA-SW-B179-02-0610, DA-SW-B179-04-0610, DA-SW-DUP01-062510, and DA-TB04-062510 were analyzed for 1,4-Dioxane. Samples DA-MW101B-062310, DA-MW7A-062310, DA-MW7B-062210 were also analyzed for volatile organic gases (OVG), ammonia-N, cyanide, nitrate-N, Nitrite-N, orthophosphate-P, sulfate, sulfide, and total organic carbon (TOC). The samples were collected by Tetra Tech NUS on June 17th, 18th, 22nd, 23rd, and 25th, 2010 and analyzed by Katahdin Analytical Services. VOC analyses were conducted by SW846 method 8260. SVOC analyses were conducted by SW846 method 8270. OVG analyses were conducted by method RSK SOP175. 1,4-dioxane analyses were conducted by methods SW846 8260SIM and 8270SIM. Anion analyses were conducted by method EPA 300.0. Ammonia analyses were conducted by method EPA350.1. Sulfide analyses were conducted by method SM4500SE. Cyanide analyses were conducted by method SW846M9012A. TOC analyses were conducted by methos EPA 415.1. A Tier 2 data validation was performed on the following analyses: VOC, SVOC,1,4-dioxane, OVG, and cyanide. A Tier 1 validation was performed on the following analyses: anions, ammonia, and TOC. The data contained in this SDG were validated with regard to the following parameters:

* • Data Completeness
* • Holding Times
* • GC/MS Tuning
• Initial/Continuing Calibrations
• Laboratory Method/Field Blank Results
• Surrogate Recoveries

TO: JFORRELLI
SDG: WE19-1
DATE: 8/20/2010

- Laboratory Control Spike/Laboratory Control Spike Duplicate Results
* • Matrix Spike/Matrix Spike Duplicate Results
* • Internal Standards
* • Field Duplicate Precision
* • Compound Quantitation
* • Compound Identification
* • Detection Limits

The asterisk (*) indicates that all quality control criteria were met for this parameter. Qualified (if applicable) analytical results are summarized in Appendix A. Results as reported by the laboratory are presented in Appendix B. Appendix C contains Region I worksheets, and Appendix D contains the documentation to support the findings as discussed in this data validation report. The attached Table summarizes the validation qualifications which are based on the following information:

VOC:

The laboratory control spike WG79069-2 had a percent recovery less than the lower limit (LL) of method QC acceptance criteria for 4-methyl-2-pentanone. Samples DA-TB01-061710, DA-TB02-062210, DA-MW6B-061710, DA-MW7B-062210, and DA-MW104B-061810 were affected. Non-detect sample results were qualified as estimated (UJ).

The laboratory control spike WG79109-2 had a percent recovery less than the lower limit (LL) of method QC acceptance criteria for 4-methyl-2-pentanone and 1,2,3-trichlorobenzene. Samples DA-MW7B-062210 (DL) and DA-MW8B-062210 were affected. Non-detect sample results were qualified as estimated (UJ) for sample DA-MW8B-062210.

The laboratory control spike WG79333-1 had a percent recovery less than the lower limit (LL) of method QC acceptance criteria for 4-methyl-2-pentanone, 1,1-dichloroethene, and 1,2-dibromomethane. Samples DA-MW101B-062310, DA-MW7A-062310, DA-TB062310, and DA-MW6A-062310 were affected. Positive results were qualified as estimated (J) and non-detect results were qualified as estimated (UJ).

Sample DA-MW104B-061810(DL) had a percent recovery greater than the upper limit (UL) of method QC acceptance criteria for surrogate dibromofluoromethane. The positive result for 1,1-dichloroethene was the only result affected and was qualified as estimated (J).

The initial calibration analyzed on instrument GCMS-F on 6/24/10 had a relative standard deviation >15% for acetone. Samples DA-MW104B-061810, DA-MW6B-061710, DA-MW7B-062210(DL), DA-MW8B-062210, DA-TB01-061710, and DA-TB02-062210 were affected. Positive results were qualified as estimated (J) and non-detect results were qualified as estimated (UJ) for the aforementioned samples except DA-MW7B-062210(DL).

The continuing calibration analyzed on instrument GCMS-F on 6/28/10 had a percent difference > 20% for acetone, 2-butanone, 2-hexanone, 1,2-dibromo-3-chloropropane, and 1,2,3-trichlorobenzene. Samples DA-MW7B-062210(DL) and DA-MW8B-062210 were affected. Non-detect results were qualified as estimated (UJ) for sample DA-MW8B-062210.

The initial calibration analyzed on instrument GCMS-F on 7/2/10 had a relative percent difference >15% for 1,2,3-trichloropropane. Samples DA-MW101B-062310, DA-MW101B-062310(DL), DA-MW6A-062310, DA-MW7A-062310, DA-MW7A-062310(DL), and DA-TB062310 were affected. Non-detect results were qualified as estimated (UJ) in the undiluted samples.

TO: JFORRELLI
SDG: WE19-1
DATE: 8/20/2010

SVOC:

The following compounds were detected in the method blank at the following maximum concentrations:

Compound	Maximum Concentration	Action Level
Bis(2-ethylhexyl)phthalate	18.0 ug/L	180 ug/L

Action levels of 10X the maximum contaminant concentration for were established to evaluate blank contamination. Dilution factors and sample aliquots were taken into consideration during the application of all action levels. Positive results less than the blank action level were qualified as non-detect (U).

Laboratory control sample WG79112-2 had a 0% recovery for benzidine. Samples DA-SW-B179-01-0610, DA-SW-B179-02-0610, DA-SW-B179-04-0610, and DA-SW-DUP01-062510 were affected. Non-detect results were qualified as rejected (UR).

The continuing calibration analyzed on instrument GCMS-U on 6/29/10 had a relative response factor <0.05 for benzoic acid. Samples DA-SW-B179-01-0610, DA-SW-B179-02-0610, DA-SW-B179-04-0610, and DA-SW-DUP01-062510 were affected. Non-detect results were qualified as rejected (UR).

1,4-dioxane 8260:

The continuing calibration analyzed on instrument GCMS-M on 7/8/10 had relative response factor <0.05 for 1,4-dioxane. Samples DA-TB04-062510, DA-DW-15-0610, and DA-DW-16-0610 were affected. Non-detect results were qualified as rejected (UR).

1,4-dioxane 8270:

All sample results were within quality control limits.

OVG:

The initial calibration analyzed on 2/9/10 had a relative standard deviation > 15% for methane. Samples DA-MW101B-062310, DA-MW7A-062310, and DA-MW7B-062210 were affected. Positive results were qualified as estimated (J).

Cyanide:

All sample results were within quality control limits.

All Other Miscellaneous parameters:

All other parameters were complete.

ADDITIONAL COMMENTS

Positive results greater than the MDL but less than the LOQ were qualified as estimated (J).

The following compounds were detected in the method blank at the following maximum concentrations:

Compound	Maximum Concentration	Action Level
1,2,3-trichlorobenzene [1]	0.46 ug/L	2.3 ug/L
Tetrachloroethene [2]	0.44 ug/L	2.2 ug/L

TO: JFORRELLI
SDG: WE19-1
DATE: 8/20/2010

(1) Maximum concentration found in a method blank affecting samples DA-MW101B-062310, DA-MW7A-062310, DA-TB062310, and DA-MW6A-062310

(2) Maximum concentration found in a method blank affecting samples DA-MW101B-062310 and DA-MW7A-062310.

Action levels of 5X the maximum contaminant concentration for were established to evaluate blank contamination. Dilution factors and sample aliquots were taken into consideration during the application of all action levels. No validation action was taken as sample results were either non-detect or greater than the blank action level.

The continuing calibration analyzed on instrument GCMS-F on 7/1/10 had a percent difference > 20% for chloroethane. Sample DA-MW104B-061810(DL) was affected. No action validation action was warranted as chloroethane was not reported from this analysis.

SVOC laboratory control spike were not spiked with n-nitrosopyrrolidine.

The following samples were analyzed at dilutions to bring target compounds into linear calibration range:

Sample ID	Dilution Factor	Compound
DA-MW101B-062310	10X	1,1-dichloroethane
DA-MW104B-061810	2X	1,1-dichloroethane
DA-MW7A-062310	10X	1,1,1-trichloroethane, 1,1-dichloroethane, chloroethane, tetrachloroethene, trichloroethene
DA-MW7B-062210	4X	1,1,1-trichloroethane, 1,1-dichloroethane

EXECUTIVE SUMMARY

Laboratory Performance Issues: Several initial and continuing calibration non-compliances resulted in the qualification of VOC and SVOC data. SVOC blank contamination resulted in the qualification of data. Several VOC and SVOC laboratory control spike non-compliances resulted in the qualification of data. A surrogate noncompliance for sample DA-MW104B-061810 resulted in the qualification of a sample result.

Other Factors Affecting Data Quality: None.

The data for these analyses were reviewed with reference to the Region I EPA "Data Validation Functional Guidelines - Part II" (12/96) and the Department of Defense (DoD) document entitled "Quality Systems Manual (QSM) for Environmental Laboratories" (January 2006). The text of this report has been formulated to address only those problem areas affecting data quality.

Megan Carson

Tetra Tech NUS
Megan Carson
Chemist 1/ Data Validator

TO: JFORRELLI
SDG: WE19-1
DATE: 8/20/2010

Edward Hedlund /for

TetraTech NUS
Joseph A. Samchuck
Data Validation Quality Assurance Officer

Attachments:

Appendix A – Qualified Analytical Results
Appendix B – Results as Reported by the Laboratory
Appendix C – Regional Worksheets
Appendix D – Support Documentation

APPENDIX A

QUALIFIED ANALYTICAL RESULTS

PROJ_NO: 02124	NSAMPLE	DA-MW101B-062310			DA-MW101B-062310DL			DA-MW104B-061810			DA-MW104B-061810DL		
SDG: WE19-1	LAB_ID	SD3717-4			SD3717-4DL			SD3583-2			SD3583-2DL		
FRACTION: OV	SAMP_DATE	6/23/2010			6/23/2010			6/18/2010			6/18/2010		
MEDIA: WATER	QC_TYPE	NM			NM			NM			NM		
	UNITS	UG/L			UG/L			UG/L			UG/L		
	PCT_SOLIDS	0.0			0.0			0.0			0.0		
	DUP_OF												
PARAMETER	RESULT	VQL	QLCD	RESULT	VQL	QLCD	RESULT	VQL	QLCD	RESULT	VQL	QLCD
1,1,1,2-TETRACHLOROETHANE	0.5	U					0.5	U				
1,1,1-TRICHLOROETHANE	96						7.5					
1,1,2,2-TETRACHLOROETHANE	0.5	U					0.5	U				
1,1,2-TRICHLOROETHANE	0.5	U					0.5	U				
1,1-DICHLOROETHANE				510						230	J	R
1,1-DICHLOROETHENE	52	J	E				14					
1,1-DICHLOROPROPENE	0.5	U					0.5	U				
1,2,3-TRICHLOROBENZENE	0.5	U					0.5	U				
1,2,3-TRICHLOROPROPANE	0.5	UJ	C				0.5	U				
1,2,4-TRICHLOROBENZENE	0.5	U					0.5	U				
1,2,4-TRIMETHYLBENZENE	0.5	U					0.5	U				
1,2-DIBROMO-3-CHLOROPROPANE	0.75	U					0.75	U				
1,2-DIBROMOETHANE	0.5	UJ	E				0.5	U				
1,2-DICHLOROBENZENE	0.5	U					0.5	U				
1,2-DICHLOROETHANE	0.5	U					0.5	U				
1,2-DICHLOROPROPANE	0.5	U					0.5	U				
1,3,5-TRIMETHYLBENZENE	0.5	U					0.5	U				
1,3-DICHLOROBENZENE	0.5	U					0.5	U				
1,3-DICHLOROPROPANE	0.5	U					0.5	U				
1,4-DICHLOROBENZENE	0.5	U					0.5	U				
2,2-DICHLOROPROPANE	0.5	U					0.5	U				
2-BUTANONE	2.5	U					2.5	U				
2-CHLOROTOLUENE	0.5	U					0.5	U				
2-HEXANONE	2.5	U					2.5	U				
4-CHLOROTOLUENE	0.5	U					0.5	U				
4-ISOPROPYLTOLUENE	0.5	U					0.5	U				
4-METHYL-2-PENTANONE	2.5	UJ	E				2.5	UJ	E			
ACETONE	2.5	U					2.5	UJ	C			
BENZENE	0.5	U					0.5	U				
BROMOBENZENE	0.5	U					0.5	U				
BROMOCHLOROMETHANE	0.5	U					0.5	U				
BROMODICHLOROMETHANE	0.5	U					0.5	U				
BROMOFORM	0.5	U					0.5	U				
BROMOMETHANE	1	U					1	U				
CARBON DISULFIDE	0.5	U					0.5	U				
CARBON TETRACHLORIDE	0.5	U					0.5	U				

PROJ_NO: 02124	NSAMPLE	DA-MW6A-062310			DA-MW6B-061710			DA-MW7A-062310			DA-MW7A-062310DL		
SDG: WE19-1	LAB_ID	SD3717-2			SD3583-1			SD3717-3			SD3717-3DL		
FRACTION: OV	SAMP_DATE	6/23/2010			6/17/2010			6/23/2010			6/23/2010		
MEDIA: WATER	QC_TYPE	NM			NM			NM			NM		
	UNITS	UG/L			UG/L			UG/L			UG/L		
	PCT_SOLIDS	0.0			0.0			0.0			0.0		
	DUP_OF												

PARAMETER	RESULT	VQL	QLCD	RESULT	VQL	QLCD	RESULT	VQL	QLCD	RESULT	VQL	QLCD
1,1,1,2-TETRACHLOROETHANE	0.5	U		0.5	U		0.5	U				
1,1,1-TRICHLOROETHANE	0.5	U		0.5	U					440		
1,1,2,2-TETRACHLOROETHANE	0.5	U		0.5	U		0.5	U				
1,1,2-TRICHLOROETHANE	0.5	U		0.5	U		0.5	U				
1,1-DICHLOROETHANE	0.5	U		0.5	U					1000		
1,1-DICHLOROETHENE	0.5	UJ	E	0.5	U		11	J	E			
1,1-DICHLOROPROPENE	0.5	U		0.5	U		0.5	U				
1,2,3-TRICHLOROBENZENE	0.5	U		0.5	U		0.5	U				
1,2,3-TRICHLOROPROPANE	0.5	UJ	C	0.5	U		0.5	UJ	C			
1,2,4-TRICHLOROBENZENE	0.5	U		0.5	U		0.5	U				
1,2,4-TRIMETHYLBENZENE	0.5	U		0.5	U		0.51	J	P			
1,2-DIBROMO-3-CHLOROPROPANE	0.75	U		0.75	U		0.75	U				
1,2-DIBROMOETHANE	0.5	UJ	E	0.5	U		0.5	UJ	E			
1,2-DICHLOROBENZENE	0.5	U		0.5	U		0.5	U				
1,2-DICHLOROETHANE	0.5	U		0.5	U		0.5	U				
1,2-DICHLOROPROPANE	0.5	U		0.5	U		0.5	U				
1,3,5-TRIMETHYLBENZENE	0.5	U		0.5	U		0.5	U				
1,3-DICHLOROBENZENE	0.5	U		0.5	U		0.5	U				
1,3-DICHLOROPROPANE	0.5	U		0.5	U		0.5	U				
1,4-DICHLOROBENZENE	0.5	U		0.5	U		0.5	U				
2,2-DICHLOROPROPANE	0.5	U		0.5	U		0.5	U				
2-BUTANONE	2.5	U		2.5	U		2.5	U				
2-CHLOROTOLUENE	0.5	U		0.5	U		0.5	U				
2-HEXANONE	2.5	U		2.5	U		2.5	U				
4-CHLOROTOLUENE	0.5	U		0.5	U		0.5	U				
4-ISOPROPYLTOLUENE	0.5	U		0.5	U		0.5	U				
4-METHYL-2-PENTANONE	2.5	UJ	E	2.5	UJ	E	2.5	UJ	E			
ACETONE	11			3.6	J	CP	9.6					
BENZENE	0.5	U		0.5	U		0.5	U				
BROMOBENZENE	0.5	U		0.5	U		0.5	U				
BROMOCHLOROMETHANE	0.5	U		0.5	U		0.5	U				
BROMODICHLOROMETHANE	0.5	U		0.5	U		0.5	U				
BROMOFORM	0.5	U		0.5	U		0.5	U				
BROMOMETHANE	1	U		1	U		1	U				
CARBON DISULFIDE	0.5	U		0.5	U		0.5	U				
CARBON TETRACHLORIDE	0.5	U		0.5	U		0.5	U				

PROJ_NO: 02124	NSAMPLE	DA-MW7B-062210			DA-MW7B-062210DL			DA-MW8B-062210			DA-TB01-061710		
SDG: WE19-1	LAB_ID	SD3639-2			SD3639-2DL			SD3639-3			SD3583-3		
FRACTION: OV	SAMP_DATE	6/22/2010			6/22/2010			6/22/2010			6/17/2010		
MEDIA: WATER	QC_TYPE	NM			NM			NM			NM		
	UNITS	UG/L			UG/L			UG/L			UG/L		
	PCT_SOLIDS	0.0			0.0			0.0			0.0		
	DUP_OF												
PARAMETER		RESULT	VQL	QLCD	RESULT	VQL	QLCD	RESULT	VQL	QLCD	RESULT	VQL	QLCD
1,1,1,2-TETRACHLOROETHANE		0.5	U					0.5	U		0.5	U	
1,1,1-TRICHLOROETHANE					290			0.5	U		0.5	U	
1,1,2,2-TETRACHLOROETHANE		0.5	U					0.5	U		0.5	U	
1,1,2-TRICHLOROETHANE		0.5	U					0.5	U		0.5	U	
1,1-DICHLOROETHANE					440			0.5	U		0.5	U	
1,1-DICHLOROETHENE		15						0.5	U		0.5	U	
1,1-DICHLOROPROPENE		0.5	U					0.5	U		0.5	U	
1,2,3-TRICHLOROBENZENE		0.5	U					0.5	UJ	CE	0.5	U	
1,2,3-TRICHLOROPROPANE		0.5	U					0.5	U		0.5	U	
1,2,4-TRICHLOROBENZENE		0.5	U					0.5	U		0.5	U	
1,2,4-TRIMETHYLBENZENE		3.6						0.5	U		0.5	U	
1,2-DIBROMO-3-CHLOROPROPANE		0.75	U					0.75	UJ	C	0.75	U	
1,2-DIBROMOETHANE		0.5	U					0.5	U		0.5	U	
1,2-DICHLOROBENZENE		0.5	U					0.5	U		0.5	U	
1,2-DICHLOROETHANE		0.5	U					0.5	U		0.5	U	
1,2-DICHLOROPROPANE		0.5	U					0.5	U		0.5	U	
1,3,5-TRIMETHYLBENZENE		0.66	J	P				0.5	U		0.5	U	
1,3-DICHLOROBENZENE		0.5	U					0.5	U		0.5	U	
1,3-DICHLOROPROPANE		0.5	U					0.5	U		0.5	U	
1,4-DICHLOROBENZENE		0.5	U					0.5	U		0.5	U	
2,2-DICHLOROPROPANE		0.5	U					0.5	U		0.5	U	
2-BUTANONE		2.5	U					2.5	UJ	C	2.5	U	
2-CHLOROTOLUENE		0.5	U					0.5	U		0.5	U	
2-HEXANONE		2.5	U					2.5	UJ	C	2.5	U	
4-CHLOROTOLUENE		0.5	U					0.5	U		0.5	U	
4-ISOPROPYLTOLUENE		0.5	U					0.5	U		0.5	U	
4-METHYL-2-PENTANONE		2.5	UJ	E				2.5	UJ	E	2.5	UJ	E
ACETONE		5.2						2.5	UJ	C	2.5	UJ	C
BENZENE		0.5	U					0.5	U		0.5	U	
BROMOBENZENE		0.5	U					0.5	U		0.5	U	
BROMOCHLOROMETHANE		0.5	U					0.5	U		0.5	U	
BROMODICHLOROMETHANE		0.5	U					0.5	U		0.5	U	
BROMOFORM		0.5	U					0.5	U		0.5	U	
BROMOMETHANE		1	U					1	U		1	U	
CARBON DISULFIDE		0.5	U					0.5	U		0.5	U	
CARBON TETRACHLORIDE		0.5	U					0.5	U		0.5	U	

PROJ_NO: 02124	NSAMPLE	DA-TB02-062210			DA-TB062310		
SDG: WE19-1	LAB_ID	SD3639-1			SD3717-1		
FRACTION: OV	SAMP_DATE	6/22/2010			6/23/2010		
MEDIA: WATER	QC_TYPE	NM			NM		
	UNITS	UG/L			UG/L		
	PCT_SOLIDS	0.0			0.0		
	DUP_OF						
PARAMETER		RESULT	VQL	QLCD	RESULT	VQL	QLCD
1,1,1,2-TETRACHLOROETHANE		0.5	U		0.5	U	
1,1,1-TRICHLOROETHANE		0.5	U		0.5	U	
1,1,2,2-TETRACHLOROETHANE		0.5	U		0.5	U	
1,1,2-TRICHLOROETHANE		0.5	U		0.5	U	
1,1-DICHLOROETHANE		0.5	U		0.5	U	
1,1-DICHLOROETHENE		0.5	U		0.5	UJ	E
1,1-DICHLOROPROPENE		0.5	U		0.5	U	
1,2,3-TRICHLOROBENZENE		0.5	U		0.5	U	
1,2,3-TRICHLOROPROPANE		0.5	U		0.5	UJ	C
1,2,4-TRICHLOROBENZENE		0.5	U		0.5	U	
1,2,4-TRIMETHYLBENZENE		0.5	U		0.5	U	
1,2-DIBROMO-3-CHLOROPROPANE		0.75	U		0.75	U	
1,2-DIBROMOETHANE		0.5	U		0.5	UJ	E
1,2-DICHLOROBENZENE		0.5	U		0.5	U	
1,2-DICHLOROETHANE		0.5	U		0.5	U	
1,2-DICHLOROPROPANE		0.5	U		0.5	U	
1,3,5-TRIMETHYLBENZENE		0.5	U		0.5	U	
1,3-DICHLOROBENZENE		0.5	U		0.5	U	
1,3-DICHLOROPROPANE		0.5	U		0.5	U	
1,4-DICHLOROBENZENE		0.5	U		0.5	U	
2,2-DICHLOROPROPANE		0.5	U		0.5	U	
2-BUTANONE		2.5	U		2.5	U	
2-CHLOROTOLUENE		0.5	U		0.5	U	
2-HEXANONE		2.5	U		2.5	U	
4-CHLOROTOLUENE		0.5	U		0.5	U	
4-ISOPROPYLTOLUENE		0.5	U		0.5	U	
4-METHYL-2-PENTANONE		2.5	UJ	E	2.5	UJ	E
ACETONE		2.5	UJ	C	2.5	U	
BENZENE		0.5	U		0.5	U	
BROMOBENZENE		0.5	U		0.5	U	
BROMOCHLOROMETHANE		0.5	U		0.5	U	
BROMODICHLOROMETHANE		0.5	U		0.5	U	
BROMOFORM		0.5	U		0.5	U	
BROMOMETHANE		1	U		1	U	
CARBON DISULFIDE		0.5	U		0.5	U	
CARBON TETRACHLORIDE		0.5	U		0.5	U	

PROJ_NO: 02124 SDG: WE19-1 FRACTION: OV MEDIA: WATER	NSAMPLE	DA-MW101B-062310			DA-MW101B-062310DL			DA-MW104B-061810			DA-MW104B-061810DL		
	LAB_ID	SD3717-4			SD3717-4DL			SD3583-2			SD3583-2DL		
	SAMP_DATE	6/23/2010			6/23/2010			6/18/2010			6/18/2010		
	QC_TYPE	NM			NM			NM			NM		
	UNITS	UG/L			UG/L			UG/L			UG/L		
	PCT_SOLIDS	0.0			0.0			0.0			0.0		
	DUP_OF												
PARAMETER		RESULT	VQL	QLCD	RESULT	VQL	QLCD	RESULT	VQL	QLCD	RESULT	VQL	QLCD
CHLOROBENZENE		0.5	U					0.5	U				
CHLORODIBROMOMETHANE		0.5	U					0.5	U				
CHLOROETHANE		94						1	U				
CHLOROFORM		0.5	U					0.5	U				
CHLOROMETHANE		1	U					1	U				
CIS-1,2-DICHLOROETHENE		0.37	J	P				8.9					
CIS-1,3-DICHLOROPROPENE		0.5	U					0.5	U				
DIBROMOMETHANE		0.5	U					0.5	U				
DICHLORODIFLUOROMETHANE		1	U					1	U				
ETHYLBENZENE		0.5	U					0.5	U				
HEXACHLOROBUTADIENE		0.5	U					0.5	U				
ISOPROPYLBENZENE		0.5	U					0.5	U				
M+P-XYLENES		1	U					1	U				
METHYL TERT-BUTYL ETHER		0.5	U					0.5	U				
METHYLENE CHLORIDE		2.5	U					2.5	U				
N-BUTYLBENZENE		0.5	U					0.5	U				
N-PROPYLBENZENE		0.5	U					0.5	U				
O-XYLENE		0.5	U					0.5	U				
SEC-BUTYLBENZENE		0.5	U					0.5	U				
STYRENE		0.5	U					0.5	U				
TERT-BUTYLBENZENE		0.5	U					0.5	U				
TETRACHLOROETHENE		0.5	U					2.7					
TOLUENE		0.5	U					0.5	U				
TRANS-1,2-DICHLOROETHENE		0.5	U					0.5	U				
TRANS-1,3-DICHLOROPROPENE		0.5	U					0.5	U				
TRICHLOROETHENE		3.5						6.3					
TRICHLOROFLUOROMETHANE		1	U					1	U				
VINYL CHLORIDE		1.6	J	P				1.4	J	P			

PROJ_NO: 02124	NSAMPLE	DA-MW6A-062310			DA-MW6B-061710			DA-MW7A-062310			DA-MW7A-062310DL		
SDG: WE19-1	LAB_ID	SD3717-2			SD3583-1			SD3717-3			SD3717-3DL		
FRACTION: OV	SAMP_DATE	6/23/2010			6/17/2010			6/23/2010			6/23/2010		
MEDIA: WATER	QC_TYPE	NM			NM			NM			NM		
	UNITS	UG/L			UG/L			UG/L			UG/L		
	PCT_SOLIDS	0.0			0.0			0.0			0.0		
	DUP_OF												
PARAMETER	RESULT	VQL	QLCD	RESULT	VQL	QLCD	RESULT	VQL	QLCD	RESULT	VQL	QLCD
CHLOROBENZENE	0.5	U		0.5	U		0.5	U				
CHLORODIBROMOMETHANE	0.5	U		0.5	U		0.5	U				
CHLOROETHANE	1	U		1	U					1000		
CHLOROFORM	0.5	U		0.5	U		0.5	U				
CHLOROMETHANE	1	U		1	U		1	U				
CIS-1,2-DICHLOROETHENE	0.5	U		0.5	U		2.2					
CIS-1,3-DICHLOROPROPENE	0.5	U		0.5	U		0.5	U				
DIBROMOMETHANE	0.5	U		0.5	U		0.5	U				
DICHLORODIFLUOROMETHANE	1	U		1	U		1	U				
ETHYLBENZENE	0.5	U		0.5	U		0.5	U				
HEXACHLOROBUTADIENE	0.5	U		0.5	U		0.5	U				
ISOPROPYLBENZENE	0.5	U		0.5	U		1.3					
M+P-XYLENES	1	U		1	U		1	U				
METHYL TERT-BUTYL ETHER	0.5	U		0.5	U		0.5	U				
METHYLENE CHLORIDE	2.5	U		2.5	U		2.5	U				
N-BUTYLBENZENE	0.5	U		0.5	U		0.5	U				
N-PROPYLBENZENE	0.5	U		0.5	U		0.5	U				
O-XYLENE	0.5	U		0.5	U		0.34	J	P			
SEC-BUTYLBENZENE	0.5	U		0.5	U		0.89	J	P			
STYRENE	0.5	U		0.5	U		0.5	U				
TERT-BUTYLBENZENE	0.5	U		0.5	U		0.34	J	P			
TETRACHLOROETHENE	0.5	U		0.5	U		8.3					
TOLUENE	0.5	U		0.5	U		0.5	U				
TRANS-1,2-DICHLOROETHENE	0.5	U		0.5	U		0.5	U				
TRANS-1,3-DICHLOROPROPENE	0.5	U		0.5	U		0.5	U				
TRICHLOROETHENE	0.5	U		0.5	U		3.9					
TRICHLOROFLUOROMETHANE	1	U		1	U		1	U				
VINYL CHLORIDE	1	U		1	U		1	U				

PROJ_NO: 02124 SDG: WE19-1 FRACTION: OV MEDIA: WATER	NSAMPLE	DA-MW7B-062210			DA-MW7B-062210DL			DA-MW8B-062210			DA-TB01-061710		
	LAB_ID	SD3639-2			SD3639-2DL			SD3639-3			SD3583-3		
	SAMP_DATE	6/22/2010			6/22/2010			6/22/2010			6/17/2010		
	QC_TYPE	NM			NM			NM			NM		
	UNITS	UG/L			UG/L			UG/L			UG/L		
	PCT_SOLIDS	0.0			0.0			0.0			0.0		
	DUP_OF												
PARAMETER		RESULT	VQL	QLCD	RESULT	VQL	QLCD	RESULT	VQL	QLCD	RESULT	VQL	QLCD
CHLOROBENZENE		0.5	U					0.5	U		0.5	U	
CHLORODIBROMOMETHANE		0.5	U					0.5	U		0.5	U	
CHLOROETHANE		1	U					1	U		1	U	
CHLOROFORM		0.5	U					0.5	U		0.5	U	
CHLOROMETHANE		1	U					1	U		1	U	
CIS-1,2-DICHLOROETHENE		0.5	U					0.5	U		0.5	U	
CIS-1,3-DICHLOROPROPENE		0.5	U					0.5	U		0.5	U	
DIBROMOMETHANE		0.5	U					0.5	U		0.5	U	
DICHLORODIFLUOROMETHANE		1	U					1	U		1	U	
ETHYLBENZENE		0.76	J	P				0.5	U		0.5	U	
HEXACHLOROBUTADIENE		0.5	U					0.5	U		0.5	U	
ISOPROPYLBENZENE		0.51	J	P				0.5	U		0.5	U	
M+P-XYLENES		1	U					1	U		1	U	
METHYL TERT-BUTYL ETHER		0.5	U					0.5	U		0.5	U	
METHYLENE CHLORIDE		2.5	U					2.5	U		2.5	U	
N-BUTYLBENZENE		0.39	J	P				0.5	U		0.5	U	
N-PROPYLBENZENE		0.9	J	P				0.5	U		0.5	U	
O-XYLENE		0.79	J	P				0.5	U		0.5	U	
SEC-BUTYLBENZENE		0.48	J	P				0.5	U		0.5	U	
STYRENE		0.5	U					0.5	U		0.5	U	
TERT-BUTYLBENZENE		0.5	U					0.5	U		0.5	U	
TETRACHLOROETHENE		0.53	J	P				0.5	U		0.5	U	
TOLUENE		0.68	J	P				0.5	U		0.5	U	
TRANS-1,2-DICHLOROETHENE		0.5	U					0.5	U		0.5	U	
TRANS-1,3-DICHLOROPROPENE		0.5	U					0.5	U		0.5	U	
TRICHLOROETHENE		1	J	P				0.5	U		0.5	U	
TRICHLOROFLUOROMETHANE		1	U					1	U		1	U	
VINYL CHLORIDE		0.7	J	P				1	U		1	U	

PROJ_NO: 02124 SDG: WE19-1 FRACTION: OV MEDIA: WATER	NSAMPLE	DA-TB02-062210			DA-TB062310		
	LAB_ID	SD3639-1			SD3717-1		
	SAMP_DATE	6/22/2010			6/23/2010		
	QC_TYPE	NM			NM		
	UNITS	UG/L			UG/L		
	PCT_SOLIDS	0.0			0.0		
	DUP_OF						
PARAMETER		RESULT	VQL	QLCD	RESULT	VQL	QLCD
CHLOROBENZENE		0.5	U		0.5	U	
CHLORODIBROMOMETHANE		0.5	U		0.5	U	
CHLOROETHANE		1	U		1	U	
CHLOROFORM		0.5	U		0.5	U	
CHLOROMETHANE		1	U		1	U	
CIS-1,2-DICHLOROETHENE		0.5	U		0.5	U	
CIS-1,3-DICHLOROPROPENE		0.5	U		0.5	U	
DIBROMOMETHANE		0.5	U		0.5	U	
DICHLORODIFLUOROMETHANE		1	U		1	U	
ETHYLBENZENE		0.5	U		0.5	U	
HEXACHLOROBUTADIENE		0.5	U		0.5	U	
ISOPROPYLBENZENE		0.5	U		0.5	U	
M+P-XYLENES		1	U		1	U	
METHYL TERT-BUTYL ETHER		0.5	U		0.5	U	
METHYLENE CHLORIDE		2.5	U		2.5	U	
N-BUTYLBENZENE		0.5	U		0.5	U	
N-PROPYLBENZENE		0.5	U		0.5	U	
O-XYLENE		0.5	U		0.5	U	
SEC-BUTYLBENZENE		0.5	U		0.5	U	
STYRENE		0.5	U		0.5	U	
TERT-BUTYLBENZENE		0.5	U		0.5	U	
TETRACHLOROETHENE		0.5	U		0.5	U	
TOLUENE		0.5	U		0.5	U	
TRANS-1,2-DICHLOROETHENE		0.5	U		0.5	U	
TRANS-1,3-DICHLOROPROPENE		0.5	U		0.5	U	
TRICHLOROETHENE		0.5	U		0.5	U	
TRICHLOROFLUOROMETHANE		1	U		1	U	
VINYL CHLORIDE		1	U		1	U	

PROJ_NO: 02124 SDG: WE19-1 FRACTION: OS MEDIA: WATER	NSAMPLE	DA-SW-B179-01-0610			DA-SW-B179-02-0610			DA-SW-B179-04-0610			DA-SW-DUP01-062510		
	LAB_ID	SD3756-1			SD3756-2			SD3756-3			SD3756-4		
	SAMP_DATE	6/25/2010			6/25/2010			6/25/2010			6/25/2010		
	QC_TYPE	NM			NM			NM			NM		
	UNITS	UG/L			UG/L			UG/L			UG/L		
	PCT_SOLIDS	0.0			0.0			0.0			0.0		
	DUP_OF										DA-SW-B179-01-0610		
PARAMETER		RESULT	VQL	QLCD	RESULT	VQL	QLCD	RESULT	VQL	QLCD	RESULT	VQL	QLCD
1,1-BIPHENYL		7.2	U		7.6	U		7.8	U		7.3	U	
1,2,4-TRICHLOROBENZENE		7.2	U		7.6	U		7.8	U		7.3	U	
1,2-DICHLOROBENZENE		7.2	U		7.6	U		7.8	U		7.3	U	
1,2-DIPHENYLHYDRAZINE		14	U		15	U		16	U		14	U	
1,3-DICHLOROBENZENE		7.2	U		7.6	U		7.8	U		7.3	U	
1,4-DICHLOROBENZENE		7.2	U		7.6	U		7.8	U		7.3	U	
2,2'-OXYBIS(1-CHLOROPROPANE)		7.2	U		7.6	U		7.8	U		7.3	U	
2,4,5-TRICHLOROPHENOL		18	U		19	U		20	U		18	U	
2,4,6-TRICHLOROPHENOL		7.2	U		7.6	U		7.8	U		7.3	U	
2,4-DICHLOROPHENOL		7.2	U		7.6	U		7.8	U		7.3	U	
2,4-DIMETHYLPHENOL		7.2	U		7.6	U		7.8	U		7.3	U	
2,4-DINITROPHENOL		18	U		19	U		20	U		18	U	
2,4-DINITROTOLUENE		7.2	U		7.6	U		7.8	U		7.3	U	
2,6-DICHLOROPHENOL		7.2	U		7.6	U		7.8	U		7.3	U	
2,6-DINITROTOLUENE		7.2	U		7.6	U		7.8	U		7.3	U	
2-CHLORONAPHTHALENE		7.2	U		7.6	U		7.8	U		7.3	U	
2-CHLOROPHENOL		7.2	U		7.6	U		7.8	U		7.3	U	
2-METHYLNAPHTHALENE		7.2	U		7.6	U		7.8	U		7.3	U	
2-METHYLPHENOL		7.2	U		7.6	U		7.8	U		7.3	U	
2-NITROANILINE		18	U		19	U		20	U		18	U	
2-NITROPHENOL		7.2	U		7.6	U		7.8	U		7.3	U	
3&4-METHYLPHENOL		7.2	U		7.6	U		7.8	U		7.3	U	
3,3'-DICHLOROBENZIDINE		7.2	U		7.6	U		7.8	U		7.3	U	
3-NITROANILINE		18	U		19	U		20	U		18	U	
4,6-DINITRO-2-METHYLPHENOL		18	U		19	U		20	U		18	U	
4-BROMOPHENYL PHENYL ETHER		7.2	U		7.6	U		7.8	U		7.3	U	
4-CHLORO-3-METHYLPHENOL		7.2	U		7.6	U		7.8	U		7.3	U	
4-CHLOROANILINE		7.2	U		7.6	U		7.8	U		7.3	U	
4-CHLOROPHENYL PHENYL ETHER		7.2	U		7.6	U		7.8	U		7.3	U	
4-NITROANILINE		18	U		19	U		20	U		18	U	
4-NITROPHENOL		18	U		19	U		20	U		18	U	
ACENAPHTHENE		7.2	U		7.6	U		7.8	U		7.3	U	
ACENAPHTHYLENE		7.2	U		7.6	U		7.8	U		7.3	U	
ANTHRACENE		7.2	U		7.6	U		7.8	U		7.3	U	
BENZIDINE		36	UR	E	38	UR	E	39	UR	E	36	UR	E
BENZO(A)ANTHRACENE		7.2	U		7.6	U		7.8	U		7.3	U	

PROJ_NO: 02124 SDG: WE19-1 FRACTION: OS MEDIA: WATER	NSAMPLE	DA-SW-B179-01-0610			DA-SW-B179-02-0610			DA-SW-B179-04-0610			DA-SW-DUP01-062510		
	LAB_ID	SD3756-1			SD3756-2			SD3756-3			SD3756-4		
	SAMP_DATE	6/25/2010			6/25/2010			6/25/2010			6/25/2010		
	QC_TYPE	NM			NM			NM			NM		
	UNITS	UG/L			UG/L			UG/L			UG/L		
	PCT_SOLIDS	0.0			0.0			0.0			0.0		
	DUP_OF										DA-SW-B179-01-0610		
PARAMETER		RESULT	VQL	QLCD	RESULT	VQL	QLCD	RESULT	VQL	QLCD	RESULT	VQL	QLCD
BENZO(A)PYRENE		7.2	U		7.6	U		7.8	U		7.3	U	
BENZO(B)FLUORANTHENE		7.2	U		7.6	U		7.8	U		7.3	U	
BENZO(G,H,I)PERYLENE		7.2	U		7.6	U		7.8	U		7.3	U	
BENZO(K)FLUORANTHENE		7.2	U		7.6	U		7.8	U		7.3	U	
BENZOIC ACID		18	UR	C	19	UR	C	20	UR	C	18	UR	C
BENZYL ALCOHOL		14	U		15	U		16	U		14	U	
BIS(2-CHLOROETHOXY)METHANE		7.2	U		7.6	U		7.8	U		7.3	U	
BIS(2-CHLOROETHYL)ETHER		7.2	U		7.6	U		7.8	U		7.3	U	
BIS(2-ETHYLHEXYL)PHTHALATE		3.8	U	A	9.1	U	A	6.5	U	A	7.3	U	
BUTYL BENZYL PHTHALATE		7.2	U		7.6	U		7.8	U		7.3	U	
CARBAZOLE		7.2	U		7.6	U		7.8	U		7.3	U	
CHRYSENE		7.2	U		7.6	U		7.8	U		7.3	U	
DIBENZO(A,H)ANTHRACENE		7.2	U		7.6	U		7.8	U		7.3	U	
DIBENZOFURAN		7.2	U		7.6	U		7.8	U		7.3	U	
DIETHYL PHTHALATE		7.2	U		7.6	U		7.8	U		7.3	U	
DIMETHYL PHTHALATE		7.2	U		7.6	U		7.8	U		7.3	U	
DI-N-BUTYL PHTHALATE		7.2	U		7.6	U		7.8	U		7.3	U	
DI-N-OCTYL PHTHALATE		7.2	U		7.6	U		7.8	U		7.3	U	
FLUORANTHENE		7.2	U		7.6	U		7.8	U		7.3	U	
FLUORENE		7.2	U		7.6	U		7.8	U		7.3	U	
HEXACHLOROBENZENE		7.2	U		7.6	U		7.8	U		7.3	U	
HEXACHLOROBUTADIENE		7.2	U		7.6	U		7.8	U		7.3	U	
HEXACHLOROETHANE		7.2	U		7.6	U		7.8	U		7.3	U	
INDENO(1,2,3-CD)PYRENE		7.2	U		7.6	U		7.8	U		7.3	U	
ISOPHORONE		7.2	U		7.6	U		7.8	U		7.3	U	
NAPHTHALENE		7.2	U		7.6	U		7.8	U		7.3	U	
NITROBENZENE		7.2	U		7.6	U		7.8	U		7.3	U	
N-NITROSODIMETHYLAMINE		7.2	U		7.6	U		7.8	U		7.3	U	
N-NITROSO-DI-N-PROPYLAMINE		7.2	U		7.6	U		7.8	U		7.3	U	
N-NITROSODIPHENYLAMINE		7.2	U		7.6	U		7.8	U		7.3	U	
N-NITROSOPYRROLIDINE		7.2	U		7.6	U		7.8	U		7.3	U	
PENTACHLOROPHENOL		18	U		19	U		20	U		18	U	
PHENANTHRENE		7.2	U		7.6	U		7.8	U		7.3	U	
PHENOL		7.2	U		7.6	U		7.8	U		7.3	U	
PYRENE		7.2	U		7.6	U		7.8	U		7.3	U	

PROJ_NO: 02124 SDG: WE19-1 FRACTION: OVSIM MEDIA: WATER	NSAMPLE	DA-DW-15-0610			DA-DW-16-0610			DA-TB04-062510		
	LAB_ID	SD3756-5			SD3756-6			SD3756-7		
	SAMP_DATE	6/25/2010			6/25/2010			6/25/2010		
	QC_TYPE	NM			NM			NM		
	UNITS	UG/L			UG/L			UG/L		
	PCT_SOLIDS	0.0			0.0			0.0		
	DUP_OF									
PARAMETER		RESULT	VQL	QLCD	RESULT	VQL	QLCD	RESULT	VQL	QLCD
1,4-DIOXANE		1	UR	C	1	UR	C	1	UR	C

PROJ_NO: 02124 SDG: WE19-1 FRACTION: OSSIM MEDIA: WATER	NSAMPLE	DA-MW101B-062310			DA-MW104B-061810			DA-MW7A-062310			DA-MW7B-062210		
	LAB_ID	SD3717-4			SD3583-2			SD3717-3			SD3639-2		
	SAMP_DATE	6/23/2010			6/18/2010			6/23/2010			6/22/2010		
	QC_TYPE	NM			NM			NM			NM		
	UNITS	UG/L			UG/L			UG/L			UG/L		
	PCT_SOLIDS	0.0			0.0			0.0			0.0		
	DUP_OF												
PARAMETER		RESULT	VQL	QLCD	RESULT	VQL	QLCD	RESULT	VQL	QLCD	RESULT	VQL	QLCD
1,4-DIOXANE		4			2.4			0.47	U		0.054	J	P

PROJ_NO: 02124	NSAMPLE	DA-SW-B179-01-0610			DA-SW-B179-02-0610			DA-SW-B179-04-0610			DA-SW-DUP01-062510		
SDG: WE19-1	LAB_ID	SD3756-1			SD3756-2			SD3756-3			SD3756-4		
FRACTION: OSSIM	SAMP_DATE	6/25/2010			6/25/2010			6/25/2010			6/25/2010		
MEDIA: WATER	QC_TYPE	NM			NM			NM			NM		
	UNITS	UG/L			UG/L			UG/L			UG/L		
	PCT_SOLIDS	0.0			0.0			0.0			0.0		
	DUP_OF										DA-SW-B179-01-0610		
PARAMETER		RESULT	VQL	QLCD	RESULT	VQL	QLCD	RESULT	VQL	QLCD	RESULT	VQL	QLCD
1,4-DIOXANE		0.48	U		0.51	U		0.52	U		0.48	U	

PROJ_NO: 02124	NSAMPLE	DA-MW101B-062310			DA-MW7A-062310			DA-MW7B-062210		
SDG: WE19-1	LAB_ID	SD3717-4			SD3717-3			SD3639-2		
FRACTION: OVG	SAMP_DATE	6/23/2010			6/23/2010			6/22/2010		
MEDIA: WATER	QC_TYPE	NM			NM			NM		
	UNITS	UG/L			UG/L			UG/L		
	PCT_SOLIDS	0.0			0.0			0.0		
	DUP_OF									
PARAMETER		RESULT	VQL	QLCD	RESULT	VQL	QLCD	RESULT	VQL	QLCD
ETHANE		2	U		2	U		2	U	
ETHENE		2	U		2	U		2	U	
METHANE		400	J	C	160	J	C	14	J	C

PROJ_NO: 02124 SDG: WE19-1 FRACTION: MISC MEDIA: WATER	NSAMPLE	DA-MW101B-062310						DA-MW7A-062310					
	LAB_ID	SD3717-4						SD3717-3					
	SAMP_DATE	6/23/2010						6/23/2010					
	QC_TYPE	NM						NM					
	UNITS	MG/L			UG/L			MG/L			UG/L		
	PCT_SOLIDS	0.0			0.0			0.0			0.0		
	DUP_OF												
PARAMETER		RESULT	VQL	QLCD	RESULT	VQL	QLCD	RESULT	VQL	QLCD	RESULT	VQL	QLCD
AMMONIA-N		0.05	U					2.4					
CYANIDE					5	U					5	U	
NITRATE-N		0.025	U					0.025	U				
NITRITE-N		0.025	U					0.025	U				
ORTHOPHOSPHATE-P		0.05	U					0.05	U				
SULFATE		14						9					
SULFIDE		2.2						1					
TOTAL ORGANIC CARBON		1.1						10					

PROJ_NO: 02124	NSAMPLE	DA-MW7B-062210					
SDG: WE19-1	LAB_ID	SD3639-2					
FRACTION: MISC	SAMP_DATE	6/22/2010					
MEDIA: WATER	QC_TYPE	NM					
	UNITS	MG/L			UG/L		
	PCT_SOLIDS	0.0			0.0		
	DUP_OF						
PARAMETER		RESULT	VQL	QLCD	RESULT	VQL	QLCD
AMMONIA-N		0.05	U				
CYANIDE					5	U	
NITRATE-N		0.02	J	P			
NITRITE-N		0.025	U				
ORTHOPHOSPHATE-P		0.05	U				
SULFATE		5.4					
SULFIDE		0.8	U				
TOTAL ORGANIC CARBON		1.8					

APPENDIX B

RESULTS AS REPORTED BY THE LABORATORY

Katahdin
ANALYTICAL SERVICES

Cert No E87604

Report of Analytical Results

Client: Tetra Tech NUS, Inc.
Lab ID: SD3717-4
Client ID: DA-MW101B-062310
Project: CTO WE19 NS Newport, SW
SDG: WE19-1

Sample Date: 23-JUN-10
Received Date: 25-JUN-10
Extract Date: 02-JUL-10
Extracted By: DJP
Extraction Method:
Lab Prep Batch: WG79439

Analysis Date: 02-JUL-10
Analyst: DJP
Analysis Method: SW846 8260B
Matrix: AQ
% Solids: NA
Report Date: 15-JUL-10

Compound	Qualifier	Result	Units	Dilution	LOQ	ADJ LOQ	ADJ MDL	ADJ LOD
Dichlorodifluoromethane	U	1.0	ug/L	1	2	2.0	0.24	1.0
Chloromethane	U	1.0	ug/L	1	2	2.0	0.36	1.0
Vinyl Chloride	J	1.6	ug/L	1	2	2.0	0.25	1.0
Bromomethane	U	1.0	ug/L	1	2	2.0	0.49	1.0
Chloroethane		94.	ug/L	1	2	2.0	0.55	1.0
Trichlorofluoromethane	U	1.0	ug/L	1	2	2.0	0.24	1.0
1,1-Dichloroethene		52.	ug/L	1	1	1.0	0.35	0.50
Carbon Disulfide	U	0.50	ug/L	1	1	1.0	0.25	0.50
Methylene Chloride	U	2.5	ug/L	1	5	5.0	1.1	2.5
Acetone	U	2.5	ug/L	1	5	5.0	2.2	2.5
trans-1,2-Dichloroethene	U	0.50	ug/L	1	1	1.0	0.25	0.50
Methyl tert-butyl Ether	U	0.50	ug/L	1	1	1.0	0.36	0.50
1,1-Dichloroethane	E	480	ug/L	1	1	1.0	0.21	0.50
cis-1,2-Dichloroethene	J	0.37	ug/L	1	1	1.0	0.21	0.50
2,2-Dichloropropane	U	0.50	ug/L	1	1	1.0	0.25	0.50
Bromochloromethane	U	0.50	ug/L	1	1	1.0	0.21	0.50
Chloroform	U	0.50	ug/L	1	1	1.0	0.32	0.50
Carbon Tetrachloride	U	0.50	ug/L	1	1	1.0	0.22	0.50
1,1,1-Trichloroethane		96.	ug/L	1	1	1.0	0.20	0.50
1,1-Dichloropropene	U	0.50	ug/L	1	1	1.0	0.21	0.50
2-Butanone	U	2.5	ug/L	1	5	5.0	1.3	2.5
Benzene	U	0.50	ug/L	1	1	1.0	0.26	0.50
1,2-Dichloroethane	U	0.50	ug/L	1	1	1.0	0.20	0.50
Trichloroethene		3.5	ug/L	1	1	1.0	0.28	0.50
Dibromomethane	U	0.50	ug/L	1	1	1.0	0.46	0.50
1,2-Dichloropropane	U	0.50	ug/L	1	1	1.0	0.25	0.50
Bromodichloromethane	U	0.50	ug/L	1	1	1.0	0.33	0.50
cis-1,3-Dichloropropene	U	0.50	ug/L	1	1	1.0	0.19	0.50
Toluene	U	0.50	ug/L	1	1	1.0	0.27	0.50
4-Methyl-2-Pentanone	U	2.5	ug/L	1	5	5.0	1.3	2.5
Tetrachloroethene	U	0.50	ug/L	1	1	1.0	0.40	0.50
trans-1,3-Dichloropropene	U	0.50	ug/L	1	1	1.0	0.20	0.50
1,1,2-Trichloroethane	U	0.50	ug/L	1	1	1.0	0.33	0.50
Dibromochloromethane	U	0.50	ug/L	1	1	1.0	0.30	0.50
1,3-Dichloropropane	U	0.50	ug/L	1	1	1.0	0.22	0.50

600 Technology Way
P.O. Box 540, Scarborough, ME 04070
Tel:(207) 874-2400 Fax:(207) 775-4029

Report of Analytical Results

Client: Tetra Tech NUS, Inc.
Lab ID: SD3717-4
Client ID: DA-MW101B-062310
Project: CTO WE19 NS Newport, SW
SDG: WE19-1

Sample Date: 23-JUN-10
Received Date: 25-JUN-10
Extract Date: 02-JUL-10
Extracted By: DJP
Extraction Method:
Lab Prep Batch: WG79439

Analysis Date: 02-JUL-10
Analyst: DJP
Analysis Method: SW846 8260B
Matrix: AQ
% Solids: NA
Report Date: 15-JUL-10

Compound	Qualifier	Result	Units	Dilution	LOQ	ADJ LOQ	ADJ MDL	ADJ LOD
1,2-Dibromoethane	U	0.50	ug/L	1	1	1.0	0.22	0.50
2-Hexanone	U	2.5	ug/L	1	5	5.0	1.7	2.5
Chlorobenzene	U	0.50	ug/L	1	1	1.0	0.22	0.50
Ethylbenzene	U	0.50	ug/L	1	1	1.0	0.21	0.50
1,1,1,2-Tetrachloroethane	U	0.50	ug/L	1	1	1.0	0.19	0.50
m+p-Xylenes	U	1.0	ug/L	1	2	2.0	0.59	1.0
o-Xylene	U	0.50	ug/L	1	1	1.0	0.25	0.50
Styrene	U	0.50	ug/L	1	1	1.0	0.23	0.50
Bromoform	U	0.50	ug/L	1	1	1.0	0.23	0.50
Isopropylbenzene	U	0.50	ug/L	1	1	1.0	0.23	0.50
Bromobenzene	U	0.50	ug/L	1	1	1.0	0.24	0.50
N-Propylbenzene	U	0.50	ug/L	1	1	1.0	0.26	0.50
1,1,2,2-Tetrachloroethane	U	0.50	ug/L	1	1	1.0	0.38	0.50
1,3,5-Trimethylbenzene	U	0.50	ug/L	1	1	1.0	0.20	0.50
2-Chlorotoluene	U	0.50	ug/L	1	1	1.0	0.20	0.50
1,2,3-Trichloropropane	U	0.50	ug/L	1	1	1.0	0.19	0.50
4-Chlorotoluene	U	0.50	ug/L	1	1	1.0	0.26	0.50
tert-Butylbenzene	U	0.50	ug/L	1	1	1.0	0.31	0.50
1,2,4-Trimethylbenzene	U	0.50	ug/L	1	1	1.0	0.19	0.50
P-Isopropyltoluene	U	0.50	ug/L	1	1	1.0	0.25	0.50
1,3-Dichlorobenzene	U	0.50	ug/L	1	1	1.0	0.26	0.50
1,4-Dichlorobenzene	U	0.50	ug/L	1	1	1.0	0.24	0.50
N-Butylbenzene	U	0.50	ug/L	1	1	1.0	0.23	0.50
sec-Butylbenzene	U	0.50	ug/L	1	1	1.0	0.21	0.50
1,2-Dichlorobenzene	U	0.50	ug/L	1	1	1.0	0.15	0.50
1,2-Dibromo-3-Chloropropane	U	0.75	ug/L	1	1	1.0	0.50	0.75
Hexachlorobutadiene	U	0.50	ug/L	1	1	1.0	0.52	0.50
1,2,4-Trichlorobenzene	U	0.50	ug/L	1	1	1.0	0.37	0.50
1,2,3-Trichlorobenzene	U	0.50	ug/L	1	1	1.0	0.20	0.50
P-Bromofluorobenzene		105.	%					
Toluene-d8		107.	%					
1,2-Dichloroethane-d4		104.	%					
Dibromofluoromethane		101.	%					

600 Technology Way
P.O. Box 540, Scarborough, ME 04070
Tel:(207) 874-2400 Fax:(207) 775-4029

http://www.katahdinlab.com

Katahdin
ANALYTICAL SERVICES

Cert No E87604

Report of Analytical Results

Client: Tetra Tech NUS, Inc.
Lab ID: SD3717-4DL
Client ID: DA-MW101B-062310
Project: CTO WE19 NS Newport, SW
SDG: WE19-1

Sample Date: 23-JUN-10
Received Date: 25-JUN-10
Extract Date: 07-JUL-10
Extracted By: HCG
Extraction Method:
Lab Prep Batch: WG79439

Analysis Date: 07-JUL-10
Analyst: HCG
Analysis Method: SW846 8260B
Matrix: AQ
% Solids: NA
Report Date: 15-JUL-10

Compound	Qualifier	Result	Units	Dilution	LOQ	ADJ LOQ	ADJ MDL	ADJ LOD
Dichlorodifluoromethane	U	10.	ug/L	10	2	20.	2.4	10.
Chloromethane	U	10.	ug/L	10	2	20.	3.6	10.
Vinyl Chloride	U	10.	ug/L	10	2	20.	2.5	10.
Bromomethane	U	10.	ug/L	10	2	20.	4.9	10.
Chloroethane		68.	ug/L	10	2	20.	5.5	10.
Trichlorofluoromethane	U	10.	ug/L	10	2	20.	2.4	10.
1,1-Dichloroethene		50.	ug/L	10	1	10.	3.5	5.0
Carbon Disulfide	U	5.0	ug/L	10	1	10.	2.5	5.0
Methylene Chloride	U	25.	ug/L	10	5	50.	11.	25.
Acetone	U	25.	ug/L	10	5	50.	22.	25.
trans-1,2-Dichloroethene	U	5.0	ug/L	10	1	10.	2.5	5.0
Methyl tert-butyl Ether	U	5.0	ug/L	10	1	10.	3.6	5.0
1,1-Dichloroethane only		510	ug/L	10	1	10.	2.1	5.0
cis-1,2-Dichloroethene	U	5.0	ug/L	10	1	10.	2.1	5.0
2,2-Dichloropropane	U	5.0	ug/L	10	1	10.	2.5	5.0
Bromochloromethane	U	5.0	ug/L	10	1	10.	2.1	5.0
Chloroform	U	5.0	ug/L	10	1	10.	3.2	5.0
Carbon Tetrachloride	U	5.0	ug/L	10	1	10.	2.2	5.0
1,1,1-Trichloroethane		92.	ug/L	10	1	10.	2.0	5.0
1,1-Dichloropropene	U	5.0	ug/L	10	1	10.	2.1	5.0
2-Butanone	U	25.	ug/L	10	5	50.	13.	25.
Benzene	U	5.0	ug/L	10	1	10.	2.6	5.0
1,2-Dichloroethane	U	5.0	ug/L	10	1	10.	2.0	5.0
Trichloroethene	J	2.9	ug/L	10	1	10.	2.8	5.0
Dibromomethane	U	5.0	ug/L	10	1	10.	4.6	5.0
1,2-Dichloropropane	U	5.0	ug/L	10	1	10.	2.5	5.0
Bromodichloromethane	U	5.0	ug/L	10	1	10.	3.3	5.0
cis-1,3-Dichloropropene	U	5.0	ug/L	10	1	10.	1.9	5.0
Toluene	U	5.0	ug/L	10	1	10.	2.7	5.0
4-Methyl-2-Pentanone	U	25.	ug/L	10	5	50.	12.	25.
Tetrachloroethene	U	5.0	ug/L	10	1	10.	4.0	5.0
trans-1,3-Dichloropropene	U	5.0	ug/L	10	1	10.	2.0	5.0
1,1,2-Trichloroethane	U	5.0	ug/L	10	1	10.	3.3	5.0
Dibromochloromethane	U	5.0	ug/L	10	1	10.	3.0	5.0
1,3-Dichloropropane	U	5.0	ug/L	10	1	10.	2.2	5.0

600 Technology Way
P.O. Box 540, Scarborough, ME 04070
Tel:(207) 874-2400 Fax:(207) 775-4029

http://www.katahdinlab.com

Report of Analytical Results

Client: Tetra Tech NUS, Inc.
Lab ID: SD3717-4DL
Client ID: DA-MW101B-062310
Project: CTO WE19 NS Newport, SW
SDG: WE19-1

Sample Date: 23-JUN-10
Received Date: 25-JUN-10
Extract Date: 07-JUL-10
Extracted By: HCG
Extraction Method:
Lab Prep Batch: WG79439

Analysis Date: 07-JUL-10
Analyst: HCG
Analysis Method: SW846 8260B
Matrix: AQ
% Solids: NA
Report Date: 15-JUL-10

Compound	Qualifier	Result	Units	Dilution	LOQ	ADJ LOQ	ADJ MDL	ADJ LOD
1,2-Dibromoethane	U	5.0	ug/L	10	1	10.	2.2	5.0
2-Hexanone	U	25.	ug/L	10	5	50.	17.	25.
Chlorobenzene	U	5.0	ug/L	10	1	10.	2.2	5.0
Ethylbenzene	U	5.0	ug/L	10	1	10.	2.1	5.0
1,1,1,2-Tetrachloroethane	U	5.0	ug/L	10	1	10.	1.9	5.0
m+p-Xylenes	U	10.	ug/L	10	2	20.	5.9	10.
o-Xylene	U	5.0	ug/L	10	1	10.	2.5	5.0
Styrene	U	5.0	ug/L	10	1	10.	2.3	5.0
Bromoform	U	5.0	ug/L	10	1	10.	2.3	5.0
Isopropylbenzene	U	5.0	ug/L	10	1	10.	2.3	5.0
Bromobenzene	U	5.0	ug/L	10	1	10.	2.4	5.0
N-Propylbenzene	U	5.0	ug/L	10	1	10.	2.6	5.0
1,1,2,2-Tetrachloroethane	U	5.0	ug/L	10	1	10.	3.8	5.0
1,3,5-Trimethylbenzene	U	5.0	ug/L	10	1	10.	2.0	5.0
2-Chlorotoluene	U	5.0	ug/L	10	1	10.	2.0	5.0
1,2,3-Trichloropropane	U	5.0	ug/L	10	1	10.	1.9	5.0
4-Chlorotoluene	U	5.0	ug/L	10	1	10.	2.6	5.0
tert-Butylbenzene	U	5.0	ug/L	10	1	10.	3.1	5.0
1,2,4-Trimethylbenzene	U	5.0	ug/L	10	1	10.	1.9	5.0
P-Isopropyltoluene	U	5.0	ug/L	10	1	10.	2.5	5.0
1,3-Dichlorobenzene	U	5.0	ug/L	10	1	10.	2.6	5.0
1,4-Dichlorobenzene	U	5.0	ug/L	10	1	10.	2.4	5.0
N-Butylbenzene	U	5.0	ug/L	10	1	10.	2.3	5.0
sec-Butylbenzene	U	5.0	ug/L	10	1	10.	2.1	5.0
1,2-Dichlorobenzene	U	5.0	ug/L	10	1	10.	1.5	5.0
1,2-Dibromo-3-Chloropropane	U	7.5	ug/L	10	1	10.	5.0	7.5
Hexachlorobutadiene	U	5.0	ug/L	10	1	10.	5.2	5.0
1,2,4-Trichlorobenzene	U	5.0	ug/L	10	1	10.	3.7	5.0
1,2,3-Trichlorobenzene	U	5.0	ug/L	10	1	10.	2.0	5.0
P-Bromofluorobenzene		89.4	%					
Toluene-d8		106.	%					
1,2-Dichloroethane-d4		107.	%					
Dibromofluoromethane		111.	%					

600 Technology Way
P.O. Box 540, Scarborough, ME 04070
Tel:(207) 874-2400 Fax:(207) 775-4029

Report of Analytical Results

Client: Tetra Tech NUS, Inc.
Lab ID: SD3583-2
Client ID: DA-MW104B-061810
Project: CTO WE19 NS Newport, SW
SDG: WE19-1

Sample Date: 18-JUN-10
Received Date: 19-JUN-10
Extract Date: 25-JUN-10
Extracted By: DJP
Extraction Method:
Lab Prep Batch: WG79253

Analysis Date: 25-JUN-10
Analyst: DJP
Analysis Method: SW846 8260B
Matrix: AQ
% Solids: NA
Report Date: 15-JUL-10

Compound	Qualifier	Result	Units	Dilution	LOQ	ADJ LOQ	ADJ MDL	ADJ LOD
Dichlorodifluoromethane	U	1.0	ug/L	1	2	2.0	0.24	1.0
Chloromethane	U	1.0	ug/L	1	2	2.0	0.36	1.0
Vinyl Chloride	J	1.4	ug/L	1	2	2.0	0.25	1.0
Bromomethane	U	1.0	ug/L	1	2	2.0	0.49	1.0
Chloroethane	U	1.0	ug/L	1	2	2.0	0.55	1.0
Trichlorofluoromethane	U	1.0	ug/L	1	2	2.0	0.24	1.0
1,1-Dichloroethene		14.	ug/L	1	1	1.0	0.35	0.50
Carbon Disulfide	U	0.50	ug/L	1	1	1.0	0.25	0.50
Methylene Chloride	U	2.5	ug/L	1	5	5.0	1.1	2.5
Acetone	U	2.5	ug/L	1	5	5.0	2.2	2.5
trans-1,2-Dichloroethene	U	0.50	ug/L	1	1	1.0	0.25	0.50
Methyl tert-butyl Ether	U	0.50	ug/L	1	1	1.0	0.36	0.50
1,1-Dichloroethane	(E)	240	ug/L	1	1	1.0	0.21	0.50
cis-1,2-Dichloroethene		8.9	ug/L	1	1	1.0	0.21	0.50
2,2-Dichloropropane	U	0.50	ug/L	1	1	1.0	0.25	0.50
Bromochloromethane	U	0.50	ug/L	1	1	1.0	0.21	0.50
Chloroform	U	0.50	ug/L	1	1	1.0	0.32	0.50
Carbon Tetrachloride	U	0.50	ug/L	1	1	1.0	0.22	0.50
1,1,1-Trichloroethane		7.5	ug/L	1	1	1.0	0.20	0.50
1,1-Dichloropropene	U	0.50	ug/L	1	1	1.0	0.21	0.50
2-Butanone	U	2.5	ug/L	1	5	5.0	1.3	2.5
Benzene	U	0.50	ug/L	1	1	1.0	0.26	0.50
1,2-Dichloroethane	U	0.50	ug/L	1	1	1.0	0.20	0.50
Trichloroethene		6.3	ug/L	1	1	1.0	0.28	0.50
Dibromomethane	U	0.50	ug/L	1	1	1.0	0.46	0.50
1,2-Dichloropropane	U	0.50	ug/L	1	1	1.0	0.25	0.50
Bromodichloromethane	U	0.50	ug/L	1	1	1.0	0.33	0.50
cis-1,3-Dichloropropene	U	0.50	ug/L	1	1	1.0	0.19	0.50
Toluene	U	0.50	ug/L	1	1	1.0	0.27	0.50
4-Methyl-2-Pentanone	U	2.5	ug/L	1	5	5.0	1.3	2.5
Tetrachloroethene		2.7	ug/L	1	1	1.0	0.40	0.50
trans-1,3-Dichloropropene	U	0.50	ug/L	1	1	1.0	0.20	0.50
1,1,2-Trichloroethane	U	0.50	ug/L	1	1	1.0	0.33	0.50
Dibromochloromethane	U	0.50	ug/L	1	1	1.0	0.30	0.50
1,3-Dichloropropane	U	0.50	ug/L	1	1	1.0	0.22	0.50

600 Technology Way
P.O. Box 540, Scarborough, ME 04070
Tel:(207) 874-2400 Fax:(207) 775-4029

Report of Analytical Results

Client: Tetra Tech NUS, Inc.
Lab ID: SD3583-2
Client ID: DA-MW104B-061810
Project: CTO WE19 NS Newport, SW
SDG: WE19-1

Sample Date: 18-JUN-10
Received Date: 19-JUN-10
Extract Date: 25-JUN-10
Extracted By: DJP
Extraction Method:
Lab Prep Batch: WG79253

Analysis Date: 25-JUN-10
Analyst: DJP
Analysis Method: SW846 8260B
Matrix: AQ
% Solids: NA
Report Date: 15-JUL-10

Compound	Qualifier	Result	Units	Dilution	LOQ	ADJ LOQ	ADJ MDL	ADJ LOD
1,2-Dibromoethane	U	0.50	ug/L	1	1	1.0	0.22	0.50
2-Hexanone	U	2.5	ug/L	1	5	5.0	1.7	2.5
Chlorobenzene	U	0.50	ug/L	1	1	1.0	0.22	0.50
Ethylbenzene	U	0.50	ug/L	1	1	1.0	0.21	0.50
1,1,1,2-Tetrachloroethane	U	0.50	ug/L	1	1	1.0	0.19	0.50
m+p-Xylenes	U	1.0	ug/L	1	2	2.0	0.59	1.0
o-Xylene	U	0.50	ug/L	1	1	1.0	0.25	0.50
Styrene	U	0.50	ug/L	1	1	1.0	0.23	0.50
Bromoform	U	0.50	ug/L	1	1	1.0	0.23	0.50
Isopropylbenzene	U	0.50	ug/L	1	1	1.0	0.23	0.50
Bromobenzene	U	0.50	ug/L	1	1	1.0	0.24	0.50
N-Propylbenzene	U	0.50	ug/L	1	1	1.0	0.26	0.50
1,1,2,2-Tetrachloroethane	U	0.50	ug/L	1	1	1.0	0.38	0.50
1,3,5-Trimethylbenzene	U	0.50	ug/L	1	1	1.0	0.20	0.50
2-Chlorotoluene	U	0.50	ug/L	1	1	1.0	0.20	0.50
1,2,3-Trichloropropane	U	0.50	ug/L	1	1	1.0	0.19	0.50
4-Chlorotoluene	U	0.50	ug/L	1	1	1.0	0.26	0.50
tert-Butylbenzene	U	0.50	ug/L	1	1	1.0	0.31	0.50
1,2,4-Trimethylbenzene	U	0.50	ug/L	1	1	1.0	0.19	0.50
P-Isopropyltoluene	U	0.50	ug/L	1	1	1.0	0.25	0.50
1,3-Dichlorobenzene	U	0.50	ug/L	1	1	1.0	0.26	0.50
1,4-Dichlorobenzene	U	0.50	ug/L	1	1	1.0	0.24	0.50
N-Butylbenzene	U	0.50	ug/L	1	1	1.0	0.23	0.50
sec-Butylbenzene	U	0.50	ug/L	1	1	1.0	0.21	0.50
1,2-Dichlorobenzene	U	0.50	ug/L	1	1	1.0	0.15	0.50
1,2-Dibromo-3-Chloropropane	U	0.75	ug/L	1	1	1.0	0.50	0.75
Hexachlorobutadiene	U	0.50	ug/L	1	1	1.0	0.52	0.50
1,2,4-Trichlorobenzene	U	0.50	ug/L	1	1	1.0	0.37	0.50
1,2,3-Trichlorobenzene	U	0.50	ug/L	1	1	1.0	0.20	0.50
P-Bromofluorobenzene		110.	%					
Toluene-d8		115.	%					
1,2-Dichloroethane-d4		132.	%					
Dibromofluoromethane		125.	%					

600 Technology Way
P.O. Box 540, Scarborough, ME 04070
Tel:(207) 874-2400 Fax:(207) 775-4029

Katahdin
ANALYTICAL SERVICES

Cert No E87604

Report of Analytical Results

Client: Tetra Tech NUS, Inc.
Lab ID: SD3583-2DL
Client ID: DA-MW104B-061810
Project: CTO WE19 NS Newport, SW
SDG: WE19-1

Sample Date: 18-JUN-10
Received Date: 19-JUN-10
Extract Date: 01-JUL-10
Extracted By: DJP
Extraction Method:
Lab Prep Batch: WG79253

Analysis Date: 01-JUL-10
Analyst: DJP
Analysis Method: SW846 8260B
Matrix: AQ
% Solids: NA
Report Date: 15-JUL-10

Compound	Qualifier	Result	Units	Dilution	LOQ	ADJ LOQ	ADJ MDL	ADJ LOD
Dichlorodifluoromethane	U	2.0	ug/L	2	2	4.0	0.48	2.0
Chloromethane	U	2.0	ug/L	2	2	4.0	0.72	2.0
Vinyl Chloride	J	1.3	ug/L	2	2	4.0	0.50	2.0
Bromomethane	U	2.0	ug/L	2	2	4.0	0.98	2.0
Chloroethane	U	2.0	ug/L	2	2	4.0	1.1	2.0
Trichlorofluoromethane	U	2.0	ug/L	2	2	4.0	0.48	2.0
1,1-Dichloroethene		13.	ug/L	2	1	2.0	0.70	1.0
Carbon Disulfide	U	1.0	ug/L	2	1	2.0	0.50	1.0
Methylene Chloride	U	5.0	ug/L	2	5	10.	2.3	5.0
Acetone	U	5.0	ug/L	2	5	10.	4.4	5.0
trans-1,2-Dichloroethene	U	1.0	ug/L	2	1	2.0	0.50	1.0
Methyl tert-butyl Ether	U	1.0	ug/L	2	1	2.0	0.72	1.0
1,1-Dichloroethane only		230	ug/L	2	1	2.0	0.42	1.0
cis-1,2-Dichloroethene		8.7	ug/L	2	1	2.0	0.42	1.0
2,2-Dichloropropane	U	1.0	ug/L	2	1	2.0	0.50	1.0
Bromochloromethane	U	1.0	ug/L	2	1	2.0	0.42	1.0
Chloroform	U	1.0	ug/L	2	1	2.0	0.64	1.0
Carbon Tetrachloride	U	1.0	ug/L	2	1	2.0	0.44	1.0
1,1,1-Trichloroethane		6.7	ug/L	2	1	2.0	0.40	1.0
1,1-Dichloropropene	U	1.0	ug/L	2	1	2.0	0.42	1.0
2-Butanone	U	5.0	ug/L	2	5	10.	2.6	5.0
Benzene	U	1.0	ug/L	2	1	2.0	0.52	1.0
1,2-Dichloroethane	U	1.0	ug/L	2	1	2.0	0.40	1.0
Trichloroethene		5.3	ug/L	2	1	2.0	0.56	1.0
Dibromomethane	U	1.0	ug/L	2	1	2.0	0.92	1.0
1,2-Dichloropropane	U	1.0	ug/L	2	1	2.0	0.50	1.0
Bromodichloromethane	U	1.0	ug/L	2	1	2.0	0.66	1.0
cis-1,3-Dichloropropene	U	1.0	ug/L	2	1	2.0	0.38	1.0
Toluene	U	1.0	ug/L	2	1	2.0	0.54	1.0
4-Methyl-2-Pentanone	U	5.0	ug/L	2	5	10.	2.6	5.0
Tetrachloroethene		2.2	ug/L	2	1	2.0	0.80	1.0
trans-1,3-Dichloropropene	U	1.0	ug/L	2	1	2.0	0.40	1.0
1,1,2-Trichloroethane	U	1.0	ug/L	2	1	2.0	0.66	1.0
Dibromochloromethane	U	1.0	ug/L	2	1	2.0	0.60	1.0
1,3-Dichloropropane	U	1.0	ug/L	2	1	2.0	0.44	1.0

600 Technology Way
P.O. Box 540, Scarborough, ME 04070
Tel:(207) 874-2400 Fax:(207) 775-4029

Report of Analytical Results

Client: Tetra Tech NUS, Inc.
Lab ID: SD3583-2DL
Client ID: DA-MW104B-061810
Project: CTO WE19 NS Newport, SW
SDG: WE19-1

Sample Date: 18-JUN-10
Received Date: 19-JUN-10
Extract Date: 01-JUL-10
Extracted By: DJP
Extraction Method:
Lab Prep Batch: WG79253

Analysis Date: 01-JUL-10
Analyst: DJP
Analysis Method: SW846 8260B
Matrix: AQ
% Solids: NA
Report Date: 15-JUL-10

Compound	Qualifier	Result	Units	Dilution	LOQ	ADJ LOQ	ADJ MDL	ADJ LOD
1,2-Dibromoethane	U	1.0	ug/L	2	1	2.0	0.44	1.0
2-Hexanone	U	5.0	ug/L	2	5	10.	3.4	5.0
Chlorobenzene	U	1.0	ug/L	2	1	2.0	0.44	1.0
Ethylbenzene	U	1.0	ug/L	2	1	2.0	0.42	1.0
1,1,1,2-Tetrachloroethane	U	1.0	ug/L	2	1	2.0	0.38	1.0
m+p-Xylenes	U	2.0	ug/L	2	2	4.0	1.2	2.0
o-Xylene	U	1.0	ug/L	2	1	2.0	0.50	1.0
Styrene	U	1.0	ug/L	2	1	2.0	0.46	1.0
Bromoform	U	1.0	ug/L	2	1	2.0	0.46	1.0
Isopropylbenzene	U	1.0	ug/L	2	1	2.0	0.46	1.0
Bromobenzene	U	1.0	ug/L	2	1	2.0	0.48	1.0
N-Propylbenzene	U	1.0	ug/L	2	1	2.0	0.52	1.0
1,1,2,2-Tetrachloroethane	U	1.0	ug/L	2	1	2.0	0.76	1.0
1,3,5-Trimethylbenzene	U	1.0	ug/L	2	1	2.0	0.40	1.0
2-Chlorotoluene	U	1.0	ug/L	2	1	2.0	0.40	1.0
1,2,3-Trichloropropane	U	1.0	ug/L	2	1	2.0	0.38	1.0
4-Chlorotoluene	U	1.0	ug/L	2	1	2.0	0.52	1.0
tert-Butylbenzene	U	1.0	ug/L	2	1	2.0	0.62	1.0
1,2,4-Trimethylbenzene	U	1.0	ug/L	2	1	2.0	0.38	1.0
P-Isopropyltoluene	U	1.0	ug/L	2	1	2.0	0.50	1.0
1,3-Dichlorobenzene	U	1.0	ug/L	2	1	2.0	0.52	1.0
1,4-Dichlorobenzene	U	1.0	ug/L	2	1	2.0	0.48	1.0
N-Butylbenzene	U	1.0	ug/L	2	1	2.0	0.46	1.0
sec-Butylbenzene	U	1.0	ug/L	2	1	2.0	0.42	1.0
1,2-Dichlorobenzene	U	1.0	ug/L	2	1	2.0	0.30	1.0
1,2-Dibromo-3-Chloropropane	U	1.5	ug/L	2	1	2.0	1.0	1.5
Hexachlorobutadiene	U	1.0	ug/L	2	1	2.0	1.0	1.0
1,2,4-Trichlorobenzene	U	1.0	ug/L	2	1	2.0	0.74	1.0
1,2,3-Trichlorobenzene	U	1.0	ug/L	2	1	2.0	0.40	1.0
P-Bromofluorobenzene		109.	%					
Toluene-d8		114.	%					
1,2-Dichloroethane-d4		133.	%					
Dibromofluoromethane	*	130.	%					

600 Technology Way
P.O. Box 540, Scarborough, ME 04070
Tel:(207) 874-2400 Fax:(207) 775-4029

Katahdin
ANALYTICAL SERVICES

Accredited in accordance with the nelac
Cert No E87604

Report of Analytical Results

Client: Tetra Tech NUS, Inc.
Lab ID: SD3717-2
Client ID: DA-MW6A-062310
Project: CTO WE19 NS Newport, SW
SDG: WE19-1

Sample Date: 23-JUN-10
Received Date: 25-JUN-10
Extract Date: 03-JUL-10
Extracted By: DJP
Extraction Method:
Lab Prep Batch: WG79333

Analysis Date: 03-JUL-10
Analyst: DJP
Analysis Method: SW846 8260B
Matrix: AQ
% Solids: NA
Report Date: 15-JUL-10

Compound	Qualifier	Result	Units	Dilution	LOQ	ADJ LOQ	ADJ MDL	ADJ LOD
Dichlorodifluoromethane	U	1.0	ug/L	1	2	2.0	0.24	1.0
Chloromethane	U	1.0	ug/L	1	2	2.0	0.36	1.0
Vinyl Chloride	U	1.0	ug/L	1	2	2.0	0.25	1.0
Bromomethane	U	1.0	ug/L	1	2	2.0	0.49	1.0
Chloroethane	U	1.0	ug/L	1	2	2.0	0.55	1.0
Trichlorofluoromethane	U	1.0	ug/L	1	2	2.0	0.24	1.0
1,1-Dichloroethene	U	0.50	ug/L	1	1	1.0	0.35	0.50
Carbon Disulfide	U	0.50	ug/L	1	1	1.0	0.25	0.50
Methylene Chloride	U	2.5	ug/L	1	5	5.0	1.1	2.5
Acetone		11.	ug/L	1	5	5.0	2.2	2.5
trans-1,2-Dichloroethene	U	0.50	ug/L	1	1	1.0	0.25	0.50
Methyl tert-butyl Ether	U	0.50	ug/L	1	1	1.0	0.36	0.50
1,1-Dichloroethane	U	0.50	ug/L	1	1	1.0	0.21	0.50
cis-1,2-Dichloroethene	U	0.50	ug/L	1	1	1.0	0.21	0.50
2,2-Dichloropropane	U	0.50	ug/L	1	1	1.0	0.25	0.50
Bromochloromethane	U	0.50	ug/L	1	1	1.0	0.21	0.50
Chloroform	U	0.50	ug/L	1	1	1.0	0.32	0.50
Carbon Tetrachloride	U	0.50	ug/L	1	1	1.0	0.22	0.50
1,1,1-Trichloroethane	U	0.50	ug/L	1	1	1.0	0.20	0.50
1,1-Dichloropropene	U	0.50	ug/L	1	1	1.0	0.21	0.50
2-Butanone	U	2.5	ug/L	1	5	5.0	1.3	2.5
Benzene	U	0.50	ug/L	1	1	1.0	0.26	0.50
1,2-Dichloroethane	U	0.50	ug/L	1	1	1.0	0.20	0.50
Trichloroethene	U	0.50	ug/L	1	1	1.0	0.28	0.50
Dibromomethane	U	0.50	ug/L	1	1	1.0	0.46	0.50
1,2-Dichloropropane	U	0.50	ug/L	1	1	1.0	0.25	0.50
Bromodichloromethane	U	0.50	ug/L	1	1	1.0	0.33	0.50
cis-1,3-Dichloropropene	U	0.50	ug/L	1	1	1.0	0.19	0.50
Toluene	U	0.50	ug/L	1	1	1.0	0.27	0.50
4-Methyl-2-Pentanone	U	2.5	ug/L	1	5	5.0	1.3	2.5
Tetrachloroethene	U	0.50	ug/L	1	1	1.0	0.40	0.50
trans-1,3-Dichloropropene	U	0.50	ug/L	1	1	1.0	0.20	0.50
1,1,2-Trichloroethane	U	0.50	ug/L	1	1	1.0	0.33	0.50
Dibromochloromethane	U	0.50	ug/L	1	1	1.0	0.30	0.50
1,3-Dichloropropane	U	0.50	ug/L	1	1	1.0	0.22	0.50

600 Technology Way
P.O. Box 540, Scarborough, ME 04070
Tel:(207) 874-2400 Fax:(207) 775-4029

Katahdin Analytical Services A0000022

Report of Analytical Results

Client: Tetra Tech NUS, Inc.
Lab ID: SD3717-2
Client ID: DA-MW6A-062310
Project: CTO WE19 NS Newport, SW
SDG: WE19-1

Sample Date: 23-JUN-10
Received Date: 25-JUN-10
Extract Date: 03-JUL-10
Extracted By: DJP
Extraction Method:
Lab Prep Batch: WG79333

Analysis Date: 03-JUL-10
Analyst: DJP
Analysis Method: SW846 8260B
Matrix: AQ
% Solids: NA
Report Date: 15-JUL-10

Compound	Qualifier	Result	Units	Dilution	LOQ	ADJ LOQ	ADJ MDL	ADJ LOD
1,2-Dibromoethane	U	0.50	ug/L	1	1	1.0	0.22	0.50
2-Hexanone	U	2.5	ug/L	1	5	5.0	1.7	2.5
Chlorobenzene	U	0.50	ug/L	1	1	1.0	0.22	0.50
Ethylbenzene	U	0.50	ug/L	1	1	1.0	0.21	0.50
1,1,1,2-Tetrachloroethane	U	0.50	ug/L	1	1	1.0	0.19	0.50
m+p-Xylenes	U	1.0	ug/L	1	2	2.0	0.59	1.0
o-Xylene	U	0.50	ug/L	1	1	1.0	0.25	0.50
Styrene	U	0.50	ug/L	1	1	1.0	0.23	0.50
Bromoform	U	0.50	ug/L	1	1	1.0	0.23	0.50
Isopropylbenzene	U	0.50	ug/L	1	1	1.0	0.23	0.50
Bromobenzene	U	0.50	ug/L	1	1	1.0	0.24	0.50
N-Propylbenzene	U	0.50	ug/L	1	1	1.0	0.26	0.50
1,1,2,2-Tetrachloroethane	U	0.50	ug/L	1	1	1.0	0.38	0.50
1,3,5-Trimethylbenzene	U	0.50	ug/L	1	1	1.0	0.20	0.50
2-Chlorotoluene	U	0.50	ug/L	1	1	1.0	0.20	0.50
1,2,3-Trichloropropane	U	0.50	ug/L	1	1	1.0	0.19	0.50
4-Chlorotoluene	U	0.50	ug/L	1	1	1.0	0.26	0.50
tert-Butylbenzene	U	0.50	ug/L	1	1	1.0	0.31	0.50
1,2,4-Trimethylbenzene	U	0.50	ug/L	1	1	1.0	0.19	0.50
P-Isopropyltoluene	U	0.50	ug/L	1	1	1.0	0.25	0.50
1,3-Dichlorobenzene	U	0.50	ug/L	1	1	1.0	0.26	0.50
1,4-Dichlorobenzene	U	0.50	ug/L	1	1	1.0	0.24	0.50
N-Butylbenzene	U	0.50	ug/L	1	1	1.0	0.23	0.50
sec-Butylbenzene	U	0.50	ug/L	1	1	1.0	0.21	0.50
1,2-Dichlorobenzene	U	0.50	ug/L	1	1	1.0	0.15	0.50
1,2-Dibromo-3-Chloropropane	U	0.75	ug/L	1	1	1.0	0.50	0.75
Hexachlorobutadiene	U	0.50	ug/L	1	1	1.0	0.52	0.50
1,2,4-Trichlorobenzene	U	0.50	ug/L	1	1	1.0	0.37	0.50
1,2,3-Trichlorobenzene	U	0.50	ug/L	1	1	1.0	0.20	0.50
P-Bromofluorobenzene		102.	%					
Toluene-d8		110.	%					
1,2-Dichloroethane-d4		112.	%					
Dibromofluoromethane		112.	%					

600 Technology Way
P.O. Box 540, Scarborough, ME 04070
Tel:(207) 874-2400 Fax:(207) 775-4029

Report of Analytical Results

Client: Tetra Tech NUS, Inc.
Lab ID: SD3583-1
Client ID: DA-MW6B-061710
Project: CTO WE19 NS Newport, SW
SDG: WE19-1

Sample Date: 17-JUN-10
Received Date: 19-JUN-10
Extract Date: 25-JUN-10
Extracted By: DJP
Extraction Method:
Lab Prep Batch: WG79069

Analysis Date: 25-JUN-10
Analyst: DJP
Analysis Method: SW846 8260B
Matrix: AQ
% Solids: NA
Report Date: 15-JUL-10

Compound	Qualifier	Result	Units	Dilution	LOQ	ADJ LOQ	ADJ MDL	ADJ LOD
Dichlorodifluoromethane	U	1.0	ug/L	1	2	2.0	0.24	1.0
Chloromethane	U	1.0	ug/L	1	2	2.0	0.36	1.0
Vinyl Chloride	U	1.0	ug/L	1	2	2.0	0.25	1.0
Bromomethane	U	1.0	ug/L	1	2	2.0	0.49	1.0
Chloroethane	U	1.0	ug/L	1	2	2.0	0.55	1.0
Trichlorofluoromethane	U	1.0	ug/L	1	2	2.0	0.24	1.0
1,1-Dichloroethene	U	0.50	ug/L	1	1	1.0	0.35	0.50
Carbon Disulfide	U	0.50	ug/L	1	1	1.0	0.25	0.50
Methylene Chloride	U	2.5	ug/L	1	5	5.0	1.1	2.5
Acetone	J	3.6	ug/L	1	5	5.0	2.2	2.5
trans-1,2-Dichloroethene	U	0.50	ug/L	1	1	1.0	0.25	0.50
Methyl tert-butyl Ether	U	0.50	ug/L	1	1	1.0	0.36	0.50
1,1-Dichloroethane	U	0.50	ug/L	1	1	1.0	0.21	0.50
cis-1,2-Dichloroethene	U	0.50	ug/L	1	1	1.0	0.21	0.50
2,2-Dichloropropane	U	0.50	ug/L	1	1	1.0	0.25	0.50
Bromochloromethane	U	0.50	ug/L	1	1	1.0	0.21	0.50
Chloroform	U	0.50	ug/L	1	1	1.0	0.32	0.50
Carbon Tetrachloride	U	0.50	ug/L	1	1	1.0	0.22	0.50
1,1,1-Trichloroethane	U	0.50	ug/L	1	1	1.0	0.20	0.50
1,1-Dichloropropene	U	0.50	ug/L	1	1	1.0	0.21	0.50
2-Butanone	U	2.5	ug/L	1	5	5.0	1.3	2.5
Benzene	U	0.50	ug/L	1	1	1.0	0.26	0.50
1,2-Dichloroethane	U	0.50	ug/L	1	1	1.0	0.20	0.50
Trichloroethene	U	0.50	ug/L	1	1	1.0	0.28	0.50
Dibromomethane	U	0.50	ug/L	1	1	1.0	0.46	0.50
1,2-Dichloropropane	U	0.50	ug/L	1	1	1.0	0.25	0.50
Bromodichloromethane	U	0.50	ug/L	1	1	1.0	0.33	0.50
cis-1,3-Dichloropropene	U	0.50	ug/L	1	1	1.0	0.19	0.50
Toluene	U	0.50	ug/L	1	1	1.0	0.27	0.50
4-Methyl-2-Pentanone	U	2.5	ug/L	1	5	5.0	1.3	2.5
Tetrachloroethene	U	0.50	ug/L	1	1	1.0	0.40	0.50
trans-1,3-Dichloropropene	U	0.50	ug/L	1	1	1.0	0.20	0.50
1,1,2-Trichloroethane	U	0.50	ug/L	1	1	1.0	0.33	0.50
Dibromochloromethane	U	0.50	ug/L	1	1	1.0	0.30	0.50
1,3-Dichloropropane	U	0.50	ug/L	1	1	1.0	0.22	0.50

600 Technology Way
P.O. Box 540, Scarborough, ME 04070
Tel:(207) 874-2400 Fax:(207) 775-4029

http://www.katahdinlab.com

Report of Analytical Results

Client: Tetra Tech NUS, Inc.
Lab ID: SD3583-1
Client ID: DA-MW6B-061710
Project: CTO WE19 NS Newport, SW
SDG: WE19-1

Sample Date: 17-JUN-10
Received Date: 19-JUN-10
Extract Date: 25-JUN-10
Extracted By: DJP
Extraction Method:
Lab Prep Batch: WG79069

Analysis Date: 25-JUN-10
Analyst: DJP
Analysis Method: SW846 8260B
Matrix: AQ
% Solids: NA
Report Date: 15-JUL-10

Compound	Qualifier	Result	Units	Dilution	LOQ	ADJ LOQ	ADJ MDL	ADJ LOD
1,2-Dibromoethane	U	0.50	ug/L	1	1	1.0	0.22	0.50
2-Hexanone	U	2.5	ug/L	1	5	5.0	1.7	2.5
Chlorobenzene	U	0.50	ug/L	1	1	1.0	0.22	0.50
Ethylbenzene	U	0.50	ug/L	1	1	1.0	0.21	0.50
1,1,1,2-Tetrachloroethane	U	0.50	ug/L	1	1	1.0	0.19	0.50
m+p-Xylenes	U	1.0	ug/L	1	2	2.0	0.59	1.0
o-Xylene	U	0.50	ug/L	1	1	1.0	0.25	0.50
Styrene	U	0.50	ug/L	1	1	1.0	0.23	0.50
Bromoform	U	0.50	ug/L	1	1	1.0	0.23	0.50
Isopropylbenzene	U	0.50	ug/L	1	1	1.0	0.23	0.50
Bromobenzene	U	0.50	ug/L	1	1	1.0	0.24	0.50
N-Propylbenzene	U	0.50	ug/L	1	1	1.0	0.26	0.50
1,1,2,2-Tetrachloroethane	U	0.50	ug/L	1	1	1.0	0.38	0.50
1,3,5-Trimethylbenzene	U	0.50	ug/L	1	1	1.0	0.20	0.50
2-Chlorotoluene	U	0.50	ug/L	1	1	1.0	0.20	0.50
1,2,3-Trichloropropane	U	0.50	ug/L	1	1	1.0	0.19	0.50
4-Chlorotoluene	U	0.50	ug/L	1	1	1.0	0.26	0.50
tert-Butylbenzene	U	0.50	ug/L	1	1	1.0	0.31	0.50
1,2,4-Trimethylbenzene	U	0.50	ug/L	1	1	1.0	0.19	0.50
P-Isopropyltoluene	U	0.50	ug/L	1	1	1.0	0.25	0.50
1,3-Dichlorobenzene	U	0.50	ug/L	1	1	1.0	0.26	0.50
1,4-Dichlorobenzene	U	0.50	ug/L	1	1	1.0	0.24	0.50
N-Butylbenzene	U	0.50	ug/L	1	1	1.0	0.23	0.50
sec-Butylbenzene	U	0.50	ug/L	1	1	1.0	0.21	0.50
1,2-Dichlorobenzene	U	0.50	ug/L	1	1	1.0	0.15	0.50
1,2-Dibromo-3-Chloropropane	U	0.75	ug/L	1	1	1.0	0.50	0.75
Hexachlorobutadiene	U	0.50	ug/L	1	1	1.0	0.52	0.50
1,2,4-Trichlorobenzene	U	0.50	ug/L	1	1	1.0	0.37	0.50
1,2,3-Trichlorobenzene	U	0.50	ug/L	1	1	1.0	0.20	0.50
P-Bromofluorobenzene		112.	%					
Toluene-d8		119.	%					
1,2-Dichloroethane-d4		131.	%					
Dibromofluoromethane		125.	%					

600 Technology Way
P.O. Box 540, Scarborough, ME 04070
Tel:(207) 874-2400 Fax:(207) 775-4029

http://www.katahdinlab.com

Katahdin
ANALYTICAL SERVICES

Cert No E87604

Report of Analytical Results

Client: Tetra Tech NUS, Inc.
Lab ID: SD3717-3
Client ID: DA-MW7A-062310
Project: CTO WE19 NS Newport, SW
SDG: WE19-1

Sample Date: 23-JUN-10
Received Date: 25-JUN-10
Extract Date: 02-JUL-10
Extracted By: DJP
Extraction Method:
Lab Prep Batch: WG79439

Analysis Date: 02-JUL-10
Analyst: DJP
Analysis Method: SW846 8260B
Matrix: AQ
% Solids: NA
Report Date: 15-JUL-10

Compound	Qualifier	Result	Units	Dilution	LOQ	ADJ LOQ	ADJ MDL	ADJ LOD
Dichlorodifluoromethane	U	1.0	ug/L	1	2	2.0	0.24	1.0
Chloromethane	U	1.0	ug/L	1	2	2.0	0.36	1.0
Vinyl Chloride	U	1.0	ug/L	1	2	2.0	0.25	1.0
Bromomethane	U	1.0	ug/L	1	2	2.0	0.49	1.0
Chloroethane	E	690	ug/L	1	2	2.0	0.55	1.0
Trichlorofluoromethane	U	1.0	ug/L	1	2	2.0	0.24	1.0
1,1-Dichloroethene		11.	ug/L	1	1	1.0	0.35	0.50
Carbon Disulfide	U	0.50	ug/L	1	1	1.0	0.25	0.50
Methylene Chloride	U	2.5	ug/L	1	5	5.0	1.1	2.5
Acetone		9.6	ug/L	1	5	5.0	2.2	2.5
trans-1,2-Dichloroethene	U	0.50	ug/L	1	1	1.0	0.25	0.50
Methyl tert-butyl Ether	U	0.50	ug/L	1	1	1.0	0.36	0.50
1,1-Dichloroethane	E	760	ug/L	1	1	1.0	0.21	0.50
cis-1,2-Dichloroethene		2.2	ug/L	1	1	1.0	0.21	0.50
2,2-Dichloropropane	U	0.50	ug/L	1	1	1.0	0.25	0.50
Bromochloromethane	U	0.50	ug/L	1	1	1.0	0.21	0.50
Chloroform	U	0.50	ug/L	1	1	1.0	0.32	0.50
Carbon Tetrachloride	U	0.50	ug/L	1	1	1.0	0.22	0.50
1,1,1-Trichloroethane	E	370	ug/L	1	1	1.0	0.20	0.50
1,1-Dichloropropene	U	0.50	ug/L	1	1	1.0	0.21	0.50
2-Butanone	U	2.5	ug/L	1	5	5.0	1.3	2.5
Benzene	U	0.50	ug/L	1	1	1.0	0.26	0.50
1,2-Dichloroethane	U	0.50	ug/L	1	1	1.0	0.20	0.50
Trichloroethene		3.9	ug/L	1	1	1.0	0.28	0.50
Dibromomethane	U	0.50	ug/L	1	1	1.0	0.46	0.50
1,2-Dichloropropane	U	0.50	ug/L	1	1	1.0	0.25	0.50
Bromodichloromethane	U	0.50	ug/L	1	1	1.0	0.33	0.50
cis-1,3-Dichloropropene	U	0.50	ug/L	1	1	1.0	0.19	0.50
Toluene	U	0.50	ug/L	1	1	1.0	0.27	0.50
4-Methyl-2-Pentanone	U	2.5	ug/L	1	5	5.0	1.3	2.5
Tetrachloroethene		8.3	ug/L	1	1	1.0	0.40	0.50
trans-1,3-Dichloropropene	U	0.50	ug/L	1	1	1.0	0.20	0.50
1,1,2-Trichloroethane	U	0.50	ug/L	1	1	1.0	0.33	0.50
Dibromochloromethane	U	0.50	ug/L	1	1	1.0	0.30	0.50
1,3-Dichloropropane	U	0.50	ug/L	1	1	1.0	0.22	0.50

600 Technology Way
P.O. Box 540, Scarborough, ME 04070
Tel:(207) 874-2400 Fax:(207) 775-4029

Report of Analytical Results

Client: Tetra Tech NUS, Inc.
Lab ID: SD3717-3
Client ID: DA-MW7A-062310
Project: CTO WE19 NS Newport, SW
SDG: WE19-1

Sample Date: 23-JUN-10
Received Date: 25-JUN-10
Extract Date: 02-JUL-10
Extracted By: DJP
Extraction Method:
Lab Prep Batch: WG79439

Analysis Date: 02-JUL-10
Analyst: DJP
Analysis Method: SW846 8260B
Matrix: AQ
% Solids: NA
Report Date: 15-JUL-10

Compound	Qualifier	Result	Units	Dilution	LOQ	ADJ LOQ	ADJ MDL	ADJ LOD
1,2-Dibromoethane	U	0.50	ug/L	1	1	1.0	0.22	0.50
2-Hexanone	U	2.5	ug/L	1	5	5.0	1.7	2.5
Chlorobenzene	U	0.50	ug/L	1	1	1.0	0.22	0.50
Ethylbenzene	U	0.50	ug/L	1	1	1.0	0.21	0.50
1,1,1,2-Tetrachloroethane	U	0.50	ug/L	1	1	1.0	0.19	0.50
m+p-Xylenes	U	1.0	ug/L	1	2	2.0	0.59	1.0
o-Xylene	J	0.34	ug/L	1	1	1.0	0.25	0.50
Styrene	U	0.50	ug/L	1	1	1.0	0.23	0.50
Bromoform	U	0.50	ug/L	1	1	1.0	0.23	0.50
Isopropylbenzene		1.3	ug/L	1	1	1.0	0.23	0.50
Bromobenzene	U	0.50	ug/L	1	1	1.0	0.24	0.50
N-Propylbenzene	U	0.50	ug/L	1	1	1.0	0.26	0.50
1,1,2,2-Tetrachloroethane	U	0.50	ug/L	1	1	1.0	0.38	0.50
1,3,5-Trimethylbenzene	U	0.50	ug/L	1	1	1.0	0.20	0.50
2-Chlorotoluene	U	0.50	ug/L	1	1	1.0	0.20	0.50
1,2,3-Trichloropropane	U	0.50	ug/L	1	1	1.0	0.19	0.50
4-Chlorotoluene	U	0.50	ug/L	1	1	1.0	0.26	0.50
tert-Butylbenzene	J	0.34	ug/L	1	1	1.0	0.31	0.50
1,2,4-Trimethylbenzene	J	0.51	ug/L	1	1	1.0	0.19	0.50
P-Isopropyltoluene	U	0.50	ug/L	1	1	1.0	0.25	0.50
1,3-Dichlorobenzene	U	0.50	ug/L	1	1	1.0	0.26	0.50
1,4-Dichlorobenzene	U	0.50	ug/L	1	1	1.0	0.24	0.50
N-Butylbenzene	U	0.50	ug/L	1	1	1.0	0.23	0.50
sec-Butylbenzene	J	0.89	ug/L	1	1	1.0	0.21	0.50
1,2-Dichlorobenzene	U	0.50	ug/L	1	1	1.0	0.15	0.50
1,2-Dibromo-3-Chloropropane	U	0.75	ug/L	1	1	1.0	0.50	0.75
Hexachlorobutadiene	U	0.50	ug/L	1	1	1.0	0.52	0.50
1,2,4-Trichlorobenzene	U	0.50	ug/L	1	1	1.0	0.37	0.50
1,2,3-Trichlorobenzene	U	0.50	ug/L	1	1	1.0	0.20	0.50
P-Bromofluorobenzene		107.	%					
Toluene-d8		109.	%					
1,2-Dichloroethane-d4		105.	%					
Dibromofluoromethane		99.6	%					

600 Technology Way
P.O. Box 540, Scarborough, ME 04070
Tel:(207) 874-2400 Fax:(207) 775-4029

Katahdin
ANALYTICAL SERVICES

Cert No E87604

Report of Analytical Results

Client: Tetra Tech NUS, Inc.
Lab ID: SD3717-3DL
Client ID: DA-MW7A-062310
Project: CTO WE19 NS Newport, SW
SDG: WE19-1

Sample Date: 23-JUN-10
Received Date: 25-JUN-10
Extract Date: 07-JUL-10
Extracted By: HCG
Extraction Method:
Lab Prep Batch: WG79439

Analysis Date: 07-JUL-10
Analyst: HCG
Analysis Method: SW846 8260B
Matrix: AQ
% Solids: NA
Report Date: 15-JUL-10

Compound	Qualifier	Result	Units	Dilution	LOQ	ADJ LOQ	ADJ MDL	ADJ LOD
Dichlorodifluoromethane	U	10.	ug/L	10	2	20.	2.4	10.
Chloromethane	U	10.	ug/L	10	2	20.	3.6	10.
Vinyl Chloride	U	10.	ug/L	10	2	20.	2.5	10.
Bromomethane	U	10.	ug/L	10	2	20.	4.9	10.
Chloroethane		1000	ug/L	10	2	20.	5.5	10.
Trichlorofluoromethane	U	10.	ug/L	10	2	20.	2.4	10.
1,1-Dichloroethene		13.	ug/L	10	1	10.	3.5	5.0
Carbon Disulfide	U	5.0	ug/L	10	1	10.	2.5	5.0
Methylene Chloride	U	25.	ug/L	10	5	50.	11.	25.
Acetone	U	25.	ug/L	10	5	50.	22.	25.
trans-1,2-Dichloroethene	U	5.0	ug/L	10	1	10.	2.5	5.0
Methyl tert-butyl Ether	U	5.0	ug/L	10	1	10.	3.6	5.0
1,1-Dichloroethane		1000	ug/L	10	1	10.	2.1	5.0
cis-1,2-Dichloroethene	J	3.1	ug/L	10	1	10.	2.1	5.0
2,2-Dichloropropane	U	5.0	ug/L	10	1	10.	2.5	5.0
Bromochloromethane	U	5.0	ug/L	10	1	10.	2.1	5.0
Chloroform	U	5.0	ug/L	10	1	10.	3.2	5.0
Carbon Tetrachloride	U	5.0	ug/L	10	1	10.	2.2	5.0
1,1,1-Trichloroethane		440	ug/L	10	1	10.	2.0	5.0
1,1-Dichloropropene	U	5.0	ug/L	10	1	10.	2.1	5.0
2-Butanone	U	25.	ug/L	10	5	50.	13.	25.
Benzene	U	5.0	ug/L	10	1	10.	2.6	5.0
1,2-Dichloroethane	U	5.0	ug/L	10	1	10.	2.0	5.0
Trichloroethene	J	3.6	ug/L	10	1	10.	2.8	5.0
Dibromomethane	U	5.0	ug/L	10	1	10.	4.6	5.0
1,2-Dichloropropane	U	5.0	ug/L	10	1	10.	2.5	5.0
Bromodichloromethane	U	5.0	ug/L	10	1	10.	3.3	5.0
cis-1,3-Dichloropropene	U	5.0	ug/L	10	1	10.	1.9	5.0
Toluene	U	5.0	ug/L	10	1	10.	2.7	5.0
4-Methyl-2-Pentanone	U	25.	ug/L	10	5	50.	13.	25.
Tetrachloroethene		11.	ug/L	10	1	10.	4.0	5.0
trans-1,3-Dichloropropene	U	5.0	ug/L	10	1	10.	2.0	5.0
1,1,2-Trichloroethane	U	5.0	ug/L	10	1	10.	3.3	5.0
Dibromochloromethane	U	5.0	ug/L	10	1	10.	3.0	5.0
1,3-Dichloropropane	U	5.0	ug/L	10	1	10.	2.2	5.0

600 Technology Way
P.O. Box 540, Scarborough, ME 04070
Tel:(207) 874-2400 Fax:(207) 775-4029

http://www.katahdinlab.com

Report of Analytical Results

Client: Tetra Tech NUS, Inc.
Lab ID: SD3717-3DL
Client ID: DA-MW7A-062310
Project: CTO WE19 NS Newport, SW
SDG: WE19-1

Sample Date: 23-JUN-10
Received Date: 25-JUN-10
Extract Date: 07-JUL-10
Extracted By: HCG
Extraction Method:
Lab Prep Batch: WG79439

Analysis Date: 07-JUL-10
Analyst: HCG
Analysis Method: SW846 8260B
Matrix: AQ
% Solids: NA
Report Date: 15-JUL-10

Compound	Qualifier	Result	Units	Dilution	LOQ	ADJ LOQ	ADJ MDL	ADJ LOD
1,2-Dibromoethane	U	5.0	ug/L	10	1	10.	2.2	5.0
2-Hexanone	U	25.	ug/L	10	5	50.	17.	25.
Chlorobenzene	U	5.0	ug/L	10	1	10.	2.2	5.0
Ethylbenzene	U	5.0	ug/L	10	1	10.	2.1	5.0
1,1,1,2-Tetrachloroethane	U	5.0	ug/L	10	1	10.	1.9	5.0
m+p-Xylenes	U	10.	ug/L	10	2	20.	5.9	10.
o-Xylene	U	5.0	ug/L	10	1	10.	2.5	5.0
Styrene	U	5.0	ug/L	10	1	10.	2.3	5.0
Bromoform	U	5.0	ug/L	10	1	10.	2.3	5.0
Isopropylbenzene	U	5.0	ug/L	10	1	10.	2.3	5.0
Bromobenzene	U	5.0	ug/L	10	1	10.	2.4	5.0
N-Propylbenzene	U	5.0	ug/L	10	1	10.	2.6	5.0
1,1,2,2-Tetrachloroethane	U	5.0	ug/L	10	1	10.	3.8	5.0
1,3,5-Trimethylbenzene	U	5.0	ug/L	10	1	10.	2.0	5.0
2-Chlorotoluene	U	5.0	ug/L	10	1	10.	2.0	5.0
1,2,3-Trichloropropane	U	5.0	ug/L	10	1	10.	1.9	5.0
4-Chlorotoluene	U	5.0	ug/L	10	1	10.	2.6	5.0
tert-Butylbenzene	U	5.0	ug/L	10	1	10.	3.1	5.0
1,2,4-Trimethylbenzene	U	5.0	ug/L	10	1	10.	1.9	5.0
P-Isopropyltoluene	U	5.0	ug/L	10	1	10.	2.5	5.0
1,3-Dichlorobenzene	U	5.0	ug/L	10	1	10.	2.6	5.0
1,4-Dichlorobenzene	U	5.0	ug/L	10	1	10.	2.4	5.0
N-Butylbenzene	U	5.0	ug/L	10	1	10.	2.3	5.0
sec-Butylbenzene	U	5.0	ug/L	10	1	10.	2.1	5.0
1,2-Dichlorobenzene	U	5.0	ug/L	10	1	10.	1.5	5.0
1,2-Dibromo-3-Chloropropane	U	7.5	ug/L	10	1	10.	5.0	7.5
Hexachlorobutadiene	U	5.0	ug/L	10	1	10.	5.2	5.0
1,2,4-Trichlorobenzene	U	5.0	ug/L	10	1	10.	3.7	5.0
1,2,3-Trichlorobenzene	U	5.0	ug/L	10	1	10.	2.0	5.0
P-Bromofluorobenzene		82.8	%					
Toluene-d8		75.8	%					
1,2-Dichloroethane-d4		120.	%					
Dibromofluoromethane		127.	%					

600 Technology Way
P.O. Box 540, Scarborough, ME 04070
Tel:(207) 874-2400 Fax:(207) 775-4029

http://www.katahdinlab.com

Katahdin
ANALYTICAL SERVICES

Cert No E87604

Report of Analytical Results

Client: Tetra Tech NUS, Inc.
Lab ID: SD3639-2
Client ID: DA-MW7B-062210
Project: CTO WE19 NS Newport, SW
SDG: WE19-1

Sample Date: 22-JUN-10
Received Date: 23-JUN-10
Extract Date: 25-JUN-10
Extracted By: DJP
Extraction Method:
Lab Prep Batch: WG79109

Analysis Date: 25-JUN-10
Analyst: DJP
Analysis Method: SW846 8260B
Matrix: AQ
% Solids: NA
Report Date: 15-JUL-10

Compound	Qualifier	Result	Units	Dilution	LOQ	ADJ LOQ	ADJ MDL	ADJ LOD
Dichlorodifluoromethane	U	1.0	ug/L	1	2	2.0	0.24	1.0
Chloromethane	U	1.0	ug/L	1	2	2.0	0.36	1.0
Vinyl Chloride	J	0.70	ug/L	1	2	2.0	0.25	1.0
Bromomethane	U	1.0	ug/L	1	2	2.0	0.49	1.0
Chloroethane	U	1.0	ug/L	1	2	2.0	0.55	1.0
Trichlorofluoromethane	U	1.0	ug/L	1	2	2.0	0.24	1.0
1,1-Dichloroethene		15.	ug/L	1	1	1.0	0.35	0.50
Carbon Disulfide	U	0.50	ug/L	1	1	1.0	0.25	0.50
Methylene Chloride	U	2.5	ug/L	1	5	5.0	1.1	2.5
Acetone		5.2	ug/L	1	5	5.0	2.2	2.5
trans-1,2-Dichloroethene	U	0.50	ug/L	1	1	1.0	0.25	0.50
Methyl tert-butyl Ether	U	0.50	ug/L	1	1	1.0	0.36	0.50
1,1-Dichloroethane	E	440	ug/L	1	1	1.0	0.21	0.50
cis-1,2-Dichloroethene	U	0.50	ug/L	1	1	1.0	0.21	0.50
2,2-Dichloropropane	U	0.50	ug/L	1	1	1.0	0.25	0.50
Bromochloromethane	U	0.50	ug/L	1	1	1.0	0.21	0.50
Chloroform	U	0.50	ug/L	1	1	1.0	0.32	0.50
Carbon Tetrachloride	U	0.50	ug/L	1	1	1.0	0.22	0.50
1,1,1-Trichloroethane	E	300	ug/L	1	1	1.0	0.20	0.50
1,1-Dichloropropene	U	0.50	ug/L	1	1	1.0	0.21	0.50
2-Butanone	U	2.5	ug/L	1	5	5.0	1.3	2.5
Benzene	U	0.50	ug/L	1	1	1.0	0.26	0.50
1,2-Dichloroethane	U	0.50	ug/L	1	1	1.0	0.20	0.50
Trichloroethene	J	1.0	ug/L	1	1	1.0	0.28	0.50
Dibromomethane	U	0.50	ug/L	1	1	1.0	0.46	0.50
1,2-Dichloropropane	U	0.50	ug/L	1	1	1.0	0.25	0.50
Bromodichloromethane	U	0.50	ug/L	1	1	1.0	0.33	0.50
cis-1,3-Dichloropropene	U	0.50	ug/L	1	1	1.0	0.19	0.50
Toluene	J	0.68	ug/L	1	1	1.0	0.27	0.50
4-Methyl-2-Pentanone	U	2.5	ug/L	1	5	5.0	1.3	2.5
Tetrachloroethene	J	0.53	ug/L	1	1	1.0	0.40	0.50
trans-1,3-Dichloropropene	U	0.50	ug/L	1	1	1.0	0.20	0.50
1,1,2-Trichloroethane	U	0.50	ug/L	1	1	1.0	0.33	0.50
Dibromochloromethane	U	0.50	ug/L	1	1	1.0	0.30	0.50
1,3-Dichloropropane	U	0.50	ug/L	1	1	1.0	0.22	0.50

600 Technology Way
P.O. Box 540, Scarborough, ME 04070
Tel:(207) 874-2400 Fax:(207) 775-4029

Katahdin Analytical Services A0000014

Report of Analytical Results

Client: Tetra Tech NUS, Inc.
Lab ID: SD3639-2
Client ID: DA-MW7B-062210
Project: CTO WE19 NS Newport, SW
SDG: WE19-1

Sample Date: 22-JUN-10
Received Date: 23-JUN-10
Extract Date: 25-JUN-10
Extracted By: DJP
Extraction Method:
Lab Prep Batch: WG79109

Analysis Date: 25-JUN-10
Analyst: DJP
Analysis Method: SW846 8260B
Matrix: AQ
% Solids: NA
Report Date: 15-JUL-10

Compound	Qualifier	Result	Units	Dilution	LOQ	ADJ LOQ	ADJ MDL	ADJ LOD
1,2-Dibromoethane	U	0.50	ug/L	1	1	1.0	0.22	0.50
2-Hexanone	U	2.5	ug/L	1	5	5.0	1.7	2.5
Chlorobenzene	U	0.50	ug/L	1	1	1.0	0.22	0.50
Ethylbenzene	J	0.76	ug/L	1	1	1.0	0.21	0.50
1,1,1,2-Tetrachloroethane	U	0.50	ug/L	1	1	1.0	0.19	0.50
m+p-Xylenes	U	1.0	ug/L	1	2	2.0	0.59	1.0
o-Xylene	J	0.79	ug/L	1	1	1.0	0.25	0.50
Styrene	U	0.50	ug/L	1	1	1.0	0.23	0.50
Bromoform	U	0.50	ug/L	1	1	1.0	0.23	0.50
Isopropylbenzene	J	0.51	ug/L	1	1	1.0	0.23	0.50
Bromobenzene	U	0.50	ug/L	1	1	1.0	0.24	0.50
N-Propylbenzene	J	0.90	ug/L	1	1	1.0	0.26	0.50
1,1,2,2-Tetrachloroethane	U	0.50	ug/L	1	1	1.0	0.38	0.50
1,3,5-Trimethylbenzene	J	0.66	ug/L	1	1	1.0	0.20	0.50
2-Chlorotoluene	U	0.50	ug/L	1	1	1.0	0.20	0.50
1,2,3-Trichloropropane	U	0.50	ug/L	1	1	1.0	0.19	0.50
4-Chlorotoluene	U	0.50	ug/L	1	1	1.0	0.26	0.50
tert-Butylbenzene	U	0.50	ug/L	1	1	1.0	0.31	0.50
1,2,4-Trimethylbenzene		3.6	ug/L	1	1	1.0	0.19	0.50
P-Isopropyltoluene	U	0.50	ug/L	1	1	1.0	0.25	0.50
1,3-Dichlorobenzene	U	0.50	ug/L	1	1	1.0	0.26	0.50
1,4-Dichlorobenzene	U	0.50	ug/L	1	1	1.0	0.24	0.50
N-Butylbenzene	J	0.39	ug/L	1	1	1.0	0.23	0.50
sec-Butylbenzene	J	0.48	ug/L	1	1	1.0	0.21	0.50
1,2-Dichlorobenzene	U	0.50	ug/L	1	1	1.0	0.15	0.50
1,2-Dibromo-3-Chloropropane	U	0.75	ug/L	1	1	1.0	0.50	0.75
Hexachlorobutadiene	U	0.50	ug/L	1	1	1.0	0.52	0.50
1,2,4-Trichlorobenzene	U	0.50	ug/L	1	1	1.0	0.37	0.50
1,2,3-Trichlorobenzene	U	0.50	ug/L	1	1	1.0	0.20	0.50
P-Bromofluorobenzene		109.	%					
Toluene-d8		116.	%					
1,2-Dichloroethane-d4		122.	%					
Dibromofluoromethane		121.	%					

600 Technology Way
P.O. Box 540, Scarborough, ME 04070
Tel:(207) 874-2400 Fax:(207) 775-4029

http://www.katahdinlab.com

Katahdin
ANALYTICAL SERVICES

ACCREDITED IN ACCORDANCE WITH nelac
Cert No E87604

Report of Analytical Results

Client: Tetra Tech NUS, Inc.
Lab ID: SD3639-2DL
Client ID: DA-MW7B-062210
Project: CTO WE19 NS Newport, SW
SDG: WE19-1

Sample Date: 22-JUN-10
Received Date: 23-JUN-10
Extract Date: 28-JUN-10
Extracted By: DJP
Extraction Method:
Lab Prep Batch: WG79109

Analysis Date: 28-JUN-10
Analyst: DJP
Analysis Method: SW846 8260B
Matrix: AQ
% Solids: NA
Report Date: 15-JUL-10

Compound	Qualifier	Result	Units	Dilution	LOQ	ADJ LOQ	ADJ MDL	ADJ LOD
Dichlorodifluoromethane	U	4.0	ug/L	4	2	8.0	0.96	4.0
Chloromethane	U	4.0	ug/L	4	2	8.0	1.4	4.0
Vinyl Chloride	U	4.0	ug/L	4	2	8.0	1.0	4.0
Bromomethane	U	4.0	ug/L	4	2	8.0	2.0	4.0
Chloroethane	U	4.0	ug/L	4	2	8.0	2.2	4.0
Trichlorofluoromethane	U	4.0	ug/L	4	2	8.0	0.96	4.0
1,1-Dichloroethene		14.	ug/L	4	1	4.0	1.4	2.0
Carbon Disulfide	U	2.0	ug/L	4	1	4.0	1.0	2.0
Methylene Chloride	U	10.	ug/L	4	5	20.	4.5	10.
Acetone	U	10.	ug/L	4	5	20.	8.8	10.
trans-1,2-Dichloroethene	U	2.0	ug/L	4	1	4.0	1.0	2.0
Methyl tert-butyl Ether	U	2.0	ug/L	4	1	4.0	1.4	2.0
1,1-Dichloroethane		440	ug/L	4	1	4.0	0.84	2.0
cis-1,2-Dichloroethene	U	2.0	ug/L	4	1	4.0	0.84	2.0
2,2-Dichloropropane	U	2.0	ug/L	4	1	4.0	1.0	2.0
Bromochloromethane	U	2.0	ug/L	4	1	4.0	0.84	2.0
Chloroform	U	2.0	ug/L	4	1	4.0	1.3	2.0
Carbon Tetrachloride	U	2.0	ug/L	4	1	4.0	0.88	2.0
1,1,1-Trichloroethane		290	ug/L	4	1	4.0	0.80	2.0
1,1-Dichloropropene	U	2.0	ug/L	4	1	4.0	0.84	2.0
2-Butanone	U	10.	ug/L	4	5	20.	5.2	10.
Benzene	U	2.0	ug/L	4	1	4.0	1.0	2.0
1,2-Dichloroethane	U	2.0	ug/L	4	1	4.0	0.80	2.0
Trichloroethene	U	2.0	ug/L	4	1	4.0	1.1	2.0
Dibromomethane	U	2.0	ug/L	4	1	4.0	1.8	2.0
1,2-Dichloropropane	U	2.0	ug/L	4	1	4.0	1.0	2.0
Bromodichloromethane	U	2.0	ug/L	4	1	4.0	1.3	2.0
cis-1,3-Dichloropropene	U	2.0	ug/L	4	1	4.0	0.76	2.0
Toluene	U	2.0	ug/L	4	1	4.0	1.1	2.0
4-Methyl-2-Pentanone	U	10.	ug/L	4	5	20.	5.3	10.
Tetrachloroethene	U	2.0	ug/L	4	1	4.0	1.6	2.0
trans-1,3-Dichloropropene	U	2.0	ug/L	4	1	4.0	0.80	2.0
1,1,2-Trichloroethane	U	2.0	ug/L	4	1	4.0	1.3	2.0
Dibromochloromethane	U	2.0	ug/L	4	1	4.0	1.2	2.0
1,3-Dichloropropane	U	2.0	ug/L	4	1	4.0	0.88	2.0

only

600 Technology Way
P.O. Box 540, Scarborough, ME 04070
Tel:(207) 874-2400 Fax:(207) 775-4029

Report of Analytical Results

Client: Tetra Tech NUS, Inc.
Lab ID: SD3639-2DL
Client ID: DA-MW7B-062210
Project: CTO WE19 NS Newport, SW
SDG: WE19-1

Sample Date: 22-JUN-10
Received Date: 23-JUN-10
Extract Date: 28-JUN-10
Extracted By: DJP
Extraction Method:
Lab Prep Batch: WG79109

Analysis Date: 28-JUN-10
Analyst: DJP
Analysis Method: SW846 8260B
Matrix: AQ
% Solids: NA
Report Date: 15-JUL-10

Compound	Qualifier	Result	Units	Dilution	LOQ	ADJ LOQ	ADJ MDL	ADJ LOD
1,2-Dibromoethane	U	2.0	ug/L	4	1	4.0	0.88	2.0
2-Hexanone	U	10.	ug/L	4	5	20.	6.8	10.
Chlorobenzene	U	2.0	ug/L	4	1	4.0	0.88	2.0
Ethylbenzene	U	2.0	ug/L	4	1	4.0	0.84	2.0
1,1,1,2-Tetrachloroethane	U	2.0	ug/L	4	1	4.0	0.76	2.0
m+p-Xylenes	U	4.0	ug/L	4	2	8.0	2.4	4.0
o-Xylene	U	2.0	ug/L	4	1	4.0	1.0	2.0
Styrene	U	2.0	ug/L	4	1	4.0	0.92	2.0
Bromoform	U	2.0	ug/L	4	1	4.0	0.92	2.0
Isopropylbenzene	U	2.0	ug/L	4	1	4.0	0.92	2.0
Bromobenzene	U	2.0	ug/L	4	1	4.0	0.96	2.0
N-Propylbenzene	U	2.0	ug/L	4	1	4.0	1.0	2.0
1,1,2,2-Tetrachloroethane	U	2.0	ug/L	4	1	4.0	1.5	2.0
1,3,5-Trimethylbenzene	U	2.0	ug/L	4	1	4.0	0.80	2.0
2-Chlorotoluene	U	2.0	ug/L	4	1	4.0	0.80	2.0
1,2,3-Trichloropropane	U	2.0	ug/L	4	1	4.0	0.76	2.0
4-Chlorotoluene	U	2.0	ug/L	4	1	4.0	1.0	2.0
tert-Butylbenzene	U	2.0	ug/L	4	1	4.0	1.2	2.0
1,2,4-Trimethylbenzene	J	3.2	ug/L	4	1	4.0	0.76	2.0
P-Isopropyltoluene	U	2.0	ug/L	4	1	4.0	1.0	2.0
1,3-Dichlorobenzene	U	2.0	ug/L	4	1	4.0	1.0	2.0
1,4-Dichlorobenzene	U	2.0	ug/L	4	1	4.0	0.96	2.0
N-Butylbenzene	U	2.0	ug/L	4	1	4.0	0.92	2.0
sec-Butylbenzene	U	2.0	ug/L	4	1	4.0	0.84	2.0
1,2-Dichlorobenzene	U	2.0	ug/L	4	1	4.0	0.60	2.0
1,2-Dibromo-3-Chloropropane	U	3.0	ug/L	4	1	4.0	2.0	3.0
Hexachlorobutadiene	U	2.0	ug/L	4	1	4.0	2.1	2.0
1,2,4-Trichlorobenzene	U	2.0	ug/L	4	1	4.0	1.5	2.0
1,2,3-Trichlorobenzene	U	2.0	ug/L	4	1	4.0	0.80	2.0
P-Bromofluorobenzene		112.	%					
Toluene-d8		112.	%					
1,2-Dichloroethane-d4		126.	%					
Dibromofluoromethane		121.	%					

600 Technology Way
P.O. Box 540, Scarborough, ME 04070
Tel:(207) 874-2400 Fax:(207) 775-4029

http://www.katahdinlab.com

Report of Analytical Results

Client: Tetra Tech NUS, Inc.
Lab ID: SD3639-3
Client ID: DA-MW8B-062210
Project: CTO WE19 NS Newport, SW
SDG: WE19-1

Sample Date: 22-JUN-10
Received Date: 23-JUN-10
Extract Date: 28-JUN-10
Extracted By: DJP
Extraction Method:
Lab Prep Batch: WG79109

Analysis Date: 28-JUN-10
Analyst: DJP
Analysis Method: SW846 8260B
Matrix: AQ
% Solids: NA
Report Date: 15-JUL-10

Compound	Qualifier	Result	Units	Dilution	LOQ	ADJ LOQ	ADJ MDL	ADJ LOD
Dichlorodifluoromethane	U	1.0	ug/L	1	2	2.0	0.24	1.0
Chloromethane	U	1.0	ug/L	1	2	2.0	0.36	1.0
Vinyl Chloride	U	1.0	ug/L	1	2	2.0	0.25	1.0
Bromomethane	U	1.0	ug/L	1	2	2.0	0.49	1.0
Chloroethane	U	1.0	ug/L	1	2	2.0	0.55	1.0
Trichlorofluoromethane	U	1.0	ug/L	1	2	2.0	0.24	1.0
1,1-Dichloroethene	U	0.50	ug/L	1	1	1.0	0.35	0.50
Carbon Disulfide	U	0.50	ug/L	1	1	1.0	0.25	0.50
Methylene Chloride	U	2.5	ug/L	1	5	5.0	1.1	2.5
Acetone	U	2.5	ug/L	1	5	5.0	2.2	2.5
trans-1,2-Dichloroethene	U	0.50	ug/L	1	1	1.0	0.25	0.50
Methyl tert-butyl Ether	U	0.50	ug/L	1	1	1.0	0.36	0.50
1,1-Dichloroethane	U	0.50	ug/L	1	1	1.0	0.21	0.50
cis-1,2-Dichloroethene	U	0.50	ug/L	1	1	1.0	0.21	0.50
2,2-Dichloropropane	U	0.50	ug/L	1	1	1.0	0.25	0.50
Bromochloromethane	U	0.50	ug/L	1	1	1.0	0.21	0.50
Chloroform	U	0.50	ug/L	1	1	1.0	0.32	0.50
Carbon Tetrachloride	U	0.50	ug/L	1	1	1.0	0.22	0.50
1,1,1-Trichloroethane	U	0.50	ug/L	1	1	1.0	0.20	0.50
1,1-Dichloropropene	U	0.50	ug/L	1	1	1.0	0.21	0.50
2-Butanone	U	2.5	ug/L	1	5	5.0	1.3	2.5
Benzene	U	0.50	ug/L	1	1	1.0	0.26	0.50
1,2-Dichloroethane	U	0.50	ug/L	1	1	1.0	0.20	0.50
Trichloroethene	U	0.50	ug/L	1	1	1.0	0.28	0.50
Dibromomethane	U	0.50	ug/L	1	1	1.0	0.46	0.50
1,2-Dichloropropane	U	0.50	ug/L	1	1	1.0	0.25	0.50
Bromodichloromethane	U	0.50	ug/L	1	1	1.0	0.33	0.50
cis-1,3-Dichloropropene	U	0.50	ug/L	1	1	1.0	0.19	0.50
Toluene	U	0.50	ug/L	1	1	1.0	0.27	0.50
4-Methyl-2-Pentanone	U	2.5	ug/L	1	5	5.0	1.3	2.5
Tetrachloroethene	U	0.50	ug/L	1	1	1.0	0.40	0.50
trans-1,3-Dichloropropene	U	0.50	ug/L	1	1	1.0	0.20	0.50
1,1,2-Trichloroethane	U	0.50	ug/L	1	1	1.0	0.33	0.50
Dibromochloromethane	U	0.50	ug/L	1	1	1.0	0.30	0.50
1,3-Dichloropropane	U	0.50	ug/L	1	1	1.0	0.22	0.50

600 Technology Way
P.O. Box 540, Scarborough, ME 04070
Tel:(207) 874-2400 Fax:(207) 775-4029

Report of Analytical Results

Client: Tetra Tech NUS, Inc.
Lab ID: SD3639-3
Client ID: DA-MW8B-062210
Project: CTO WE19 NS Newport, SW
SDG: WE19-1

Sample Date: 22-JUN-10
Received Date: 23-JUN-10
Extract Date: 28-JUN-10
Extracted By: DJP
Extraction Method:
Lab Prep Batch: WG79109

Analysis Date: 28-JUN-10
Analyst: DJP
Analysis Method: SW846 8260B
Matrix: AQ
% Solids: NA
Report Date: 15-JUL-10

Compound	Qualifier	Result	Units	Dilution	LOQ	ADJ LOQ	ADJ MDL	ADJ LOD
1,2-Dibromoethane	U	0.50	ug/L	1	1	1.0	0.22	0.50
2-Hexanone	U	2.5	ug/L	1	5	5.0	1.7	2.5
Chlorobenzene	U	0.50	ug/L	1	1	1.0	0.22	0.50
Ethylbenzene	U	0.50	ug/L	1	1	1.0	0.21	0.50
1,1,1,2-Tetrachloroethane	U	0.50	ug/L	1	1	1.0	0.19	0.50
m+p-Xylenes	U	1.0	ug/L	1	2	2.0	0.59	1.0
o-Xylene	U	0.50	ug/L	1	1	1.0	0.25	0.50
Styrene	U	0.50	ug/L	1	1	1.0	0.23	0.50
Bromoform	U	0.50	ug/L	1	1	1.0	0.23	0.50
Isopropylbenzene	U	0.50	ug/L	1	1	1.0	0.23	0.50
Bromobenzene	U	0.50	ug/L	1	1	1.0	0.24	0.50
N-Propylbenzene	U	0.50	ug/L	1	1	1.0	0.26	0.50
1,1,2,2-Tetrachloroethane	U	0.50	ug/L	1	1	1.0	0.38	0.50
1,3,5-Trimethylbenzene	U	0.50	ug/L	1	1	1.0	0.20	0.50
2-Chlorotoluene	U	0.50	ug/L	1	1	1.0	0.20	0.50
1,2,3-Trichloropropane	U	0.50	ug/L	1	1	1.0	0.19	0.50
4-Chlorotoluene	U	0.50	ug/L	1	1	1.0	0.26	0.50
tert-Butylbenzene	U	0.50	ug/L	1	1	1.0	0.31	0.50
1,2,4-Trimethylbenzene	U	0.50	ug/L	1	1	1.0	0.19	0.50
P-Isopropyltoluene	U	0.50	ug/L	1	1	1.0	0.25	0.50
1,3-Dichlorobenzene	U	0.50	ug/L	1	1	1.0	0.26	0.50
1,4-Dichlorobenzene	U	0.50	ug/L	1	1	1.0	0.24	0.50
N-Butylbenzene	U	0.50	ug/L	1	1	1.0	0.23	0.50
sec-Butylbenzene	U	0.50	ug/L	1	1	1.0	0.21	0.50
1,2-Dichlorobenzene	U	0.50	ug/L	1	1	1.0	0.15	0.50
1,2-Dibromo-3-Chloropropane	U	0.75	ug/L	1	1	1.0	0.50	0.75
Hexachlorobutadiene	U	0.50	ug/L	1	1	1.0	0.52	0.50
1,2,4-Trichlorobenzene	U	0.50	ug/L	1	1	1.0	0.37	0.50
1,2,3-Trichlorobenzene	U	0.50	ug/L	1	1	1.0	0.20	0.50
P-Bromofluorobenzene		103.	%					
Toluene-d8		108.	%					
1,2-Dichloroethane-d4		114.	%					
Dibromofluoromethane		115.	%					

600 Technology Way
P.O. Box 540, Scarborough, ME 04070
Tel:(207) 874-2400 Fax:(207) 775-4029

Katahdin
ANALYTICAL SERVICES

Cert No E87604

Report of Analytical Results

Client: Tetra Tech NUS, Inc.
Lab ID: SD3583-3
Client ID: DA-TB01-061710
Project: CTO WE19 NS Newport, SW
SDG: WE19-1

Sample Date: 17-JUN-10
Received Date: 19-JUN-10
Extract Date: 25-JUN-10
Extracted By: DJP
Extraction Method:
Lab Prep Batch: WG79069

Analysis Date: 25-JUN-10
Analyst: DJP
Analysis Method: SW846 8260B
Matrix: AQ
% Solids: NA
Report Date: 15-JUL-10

Compound	Qualifier	Result	Units	Dilution	LOQ	ADJ LOQ	ADJ MDL	ADJ LOD
Dichlorodifluoromethane	U	1.0	ug/L	1	2	2.0	0.24	1.0
Chloromethane	U	1.0	ug/L	1	2	2.0	0.36	1.0
Vinyl Chloride	U	1.0	ug/L	1	2	2.0	0.25	1.0
Bromomethane	U	1.0	ug/L	1	2	2.0	0.49	1.0
Chloroethane	U	1.0	ug/L	1	2	2.0	0.55	1.0
Trichlorofluoromethane	U	1.0	ug/L	1	2	2.0	0.24	1.0
1,1-Dichloroethene	U	0.50	ug/L	1	1	1.0	0.35	0.50
Carbon Disulfide	U	0.50	ug/L	1	1	1.0	0.25	0.50
Methylene Chloride	U	2.5	ug/L	1	5	5.0	1.1	2.5
Acetone	U	2.5	ug/L	1	5	5.0	2.2	2.5
trans-1,2-Dichloroethene	U	0.50	ug/L	1	1	1.0	0.25	0.50
Methyl tert-butyl Ether	U	0.50	ug/L	1	1	1.0	0.36	0.50
1,1-Dichloroethane	U	0.50	ug/L	1	1	1.0	0.21	0.50
cis-1,2-Dichloroethene	U	0.50	ug/L	1	1	1.0	0.21	0.50
2,2-Dichloropropane	U	0.50	ug/L	1	1	1.0	0.25	0.50
Bromochloromethane	U	0.50	ug/L	1	1	1.0	0.21	0.50
Chloroform	U	0.50	ug/L	1	1	1.0	0.32	0.50
Carbon Tetrachloride	U	0.50	ug/L	1	1	1.0	0.22	0.50
1,1,1-Trichloroethane	U	0.50	ug/L	1	1	1.0	0.20	0.50
1,1-Dichloropropene	U	0.50	ug/L	1	1	1.0	0.21	0.50
2-Butanone	U	2.5	ug/L	1	5	5.0	1.3	2.5
Benzene	U	0.50	ug/L	1	1	1.0	0.26	0.50
1,2-Dichloroethane	U	0.50	ug/L	1	1	1.0	0.20	0.50
Trichloroethene	U	0.50	ug/L	1	1	1.0	0.28	0.50
Dibromomethane	U	0.50	ug/L	1	1	1.0	0.46	0.50
1,2-Dichloropropane	U	0.50	ug/L	1	1	1.0	0.25	0.50
Bromodichloromethane	U	0.50	ug/L	1	1	1.0	0.33	0.50
cis-1,3-Dichloropropene	U	0.50	ug/L	1	1	1.0	0.19	0.50
Toluene	U	0.50	ug/L	1	1	1.0	0.27	0.50
4-Methyl-2-Pentanone	U	2.5	ug/L	1	5	5.0	1.3	2.5
Tetrachloroethene	U	0.50	ug/L	1	1	1.0	0.40	0.50
trans-1,3-Dichloropropene	U	0.50	ug/L	1	1	1.0	0.20	0.50
1,1,2-Trichloroethane	U	0.50	ug/L	1	1	1.0	0.33	0.50
Dibromochloromethane	U	0.50	ug/L	1	1	1.0	0.30	0.50
1,3-Dichloropropane	U	0.50	ug/L	1	1	1.0	0.22	0.50

600 Technology Way
P.O. Box 540, Scarborough, ME 04070
Tel:(207) 874-2400 Fax:(207) 775-4029

Report of Analytical Results

Client: Tetra Tech NUS, Inc.
Lab ID: SD3583-3
Client ID: DA-TB01-061710
Project: CTO WE19 NS Newport, SW
SDG: WE19-1

Sample Date: 17-JUN-10
Received Date: 19-JUN-10
Extract Date: 25-JUN-10
Extracted By: DJP
Extraction Method:
Lab Prep Batch: WG79069

Analysis Date: 25-JUN-10
Analyst: DJP
Analysis Method: SW846 8260B
Matrix: AQ
% Solids: NA
Report Date: 15-JUL-10

Compound	Qualifier	Result	Units	Dilution	LOQ	ADJ LOQ	ADJ MDL	ADJ LOD
1,2-Dibromoethane	U	0.50	ug/L	1	1	1.0	0.22	0.50
2-Hexanone	U	2.5	ug/L	1	5	5.0	1.7	2.5
Chlorobenzene	U	0.50	ug/L	1	1	1.0	0.22	0.50
Ethylbenzene	U	0.50	ug/L	1	1	1.0	0.21	0.50
1,1,1,2-Tetrachloroethane	U	0.50	ug/L	1	1	1.0	0.19	0.50
m+p-Xylenes	U	1.0	ug/L	1	2	2.0	0.59	1.0
o-Xylene	U	0.50	ug/L	1	1	1.0	0.25	0.50
Styrene	U	0.50	ug/L	1	1	1.0	0.23	0.50
Bromoform	U	0.50	ug/L	1	1	1.0	0.23	0.50
Isopropylbenzene	U	0.50	ug/L	1	1	1.0	0.23	0.50
Bromobenzene	U	0.50	ug/L	1	1	1.0	0.24	0.50
N-Propylbenzene	U	0.50	ug/L	1	1	1.0	0.26	0.50
1,1,2,2-Tetrachloroethane	U	0.50	ug/L	1	1	1.0	0.38	0.50
1,3,5-Trimethylbenzene	U	0.50	ug/L	1	1	1.0	0.20	0.50
2-Chlorotoluene	U	0.50	ug/L	1	1	1.0	0.20	0.50
1,2,3-Trichloropropane	U	0.50	ug/L	1	1	1.0	0.19	0.50
4-Chlorotoluene	U	0.50	ug/L	1	1	1.0	0.26	0.50
tert-Butylbenzene	U	0.50	ug/L	1	1	1.0	0.31	0.50
1,2,4-Trimethylbenzene	U	0.50	ug/L	1	1	1.0	0.19	0.50
P-Isopropyltoluene	U	0.50	ug/L	1	1	1.0	0.25	0.50
1,3-Dichlorobenzene	U	0.50	ug/L	1	1	1.0	0.26	0.50
1,4-Dichlorobenzene	U	0.50	ug/L	1	1	1.0	0.24	0.50
N-Butylbenzene	U	0.50	ug/L	1	1	1.0	0.23	0.50
sec-Butylbenzene	U	0.50	ug/L	1	1	1.0	0.21	0.50
1,2-Dichlorobenzene	U	0.50	ug/L	1	1	1.0	0.15	0.50
1,2-Dibromo-3-Chloropropane	U	0.75	ug/L	1	1	1.0	0.50	0.75
Hexachlorobutadiene	U	0.50	ug/L	1	1	1.0	0.52	0.50
1,2,4-Trichlorobenzene	U	0.50	ug/L	1	1	1.0	0.37	0.50
1,2,3-Trichlorobenzene	U	0.50	ug/L	1	1	1.0	0.20	0.50
P-Bromofluorobenzene		106.	%					
Toluene-d8		109.	%					
1,2-Dichloroethane-d4		117.	%					
Dibromofluoromethane		112.	%					

600 Technology Way
P.O. Box 540, Scarborough, ME 04070
Tel:(207) 874-2400 Fax:(207) 775-4029

http://www.katahdinlab.com

Katahdin
ANALYTICAL SERVICES

Cert No E87604

Report of Analytical Results

Client: Tetra Tech NUS, Inc.
Lab ID: SD3639-1
Client ID: DA-TB02-062210
Project: CTO WE19 NS Newport, SW
SDG: WE19-1

Sample Date: 22-JUN-10
Received Date: 23-JUN-10
Extract Date: 25-JUN-10
Extracted By: DJP
Extraction Method:
Lab Prep Batch: WG79069

Analysis Date: 25-JUN-10
Analyst: DJP
Analysis Method: SW846 8260B
Matrix: AQ
% Solids: NA
Report Date: 15-JUL-10

Compound	Qualifier	Result	Units	Dilution	LOQ	ADJ LOQ	ADJ MDL	ADJ LOD
Dichlorodifluoromethane	U	1.0	ug/L	1	2	2.0	0.24	1.0
Chloromethane	U	1.0	ug/L	1	2	2.0	0.36	1.0
Vinyl Chloride	U	1.0	ug/L	1	2	2.0	0.25	1.0
Bromomethane	U	1.0	ug/L	1	2	2.0	0.49	1.0
Chloroethane	U	1.0	ug/L	1	2	2.0	0.55	1.0
Trichlorofluoromethane	U	1.0	ug/L	1	2	2.0	0.24	1.0
1,1-Dichloroethene	U	0.50	ug/L	1	1	1.0	0.35	0.50
Carbon Disulfide	U	0.50	ug/L	1	1	1.0	0.25	0.50
Methylene Chloride	U	2.5	ug/L	1	5	5.0	1.1	2.5
Acetone	U	2.5	ug/L	1	5	5.0	2.2	2.5
trans-1,2-Dichloroethene	U	0.50	ug/L	1	1	1.0	0.25	0.50
Methyl tert-butyl Ether	U	0.50	ug/L	1	1	1.0	0.36	0.50
1,1-Dichloroethane	U	0.50	ug/L	1	1	1.0	0.21	0.50
cis-1,2-Dichloroethene	U	0.50	ug/L	1	1	1.0	0.21	0.50
2,2-Dichloropropane	U	0.50	ug/L	1	1	1.0	0.25	0.50
Bromochloromethane	U	0.50	ug/L	1	1	1.0	0.21	0.50
Chloroform	U	0.50	ug/L	1	1	1.0	0.32	0.50
Carbon Tetrachloride	U	0.50	ug/L	1	1	1.0	0.22	0.50
1,1,1-Trichloroethane	U	0.50	ug/L	1	1	1.0	0.20	0.50
1,1-Dichloropropene	U	0.50	ug/L	1	1	1.0	0.21	0.50
2-Butanone	U	2.5	ug/L	1	5	5.0	1.3	2.5
Benzene	U	0.50	ug/L	1	1	1.0	0.26	0.50
1,2-Dichloroethane	U	0.50	ug/L	1	1	1.0	0.20	0.50
Trichloroethene	U	0.50	ug/L	1	1	1.0	0.28	0.50
Dibromomethane	U	0.50	ug/L	1	1	1.0	0.46	0.50
1,2-Dichloropropane	U	0.50	ug/L	1	1	1.0	0.25	0.50
Bromodichloromethane	U	0.50	ug/L	1	1	1.0	0.33	0.50
cis-1,3-Dichloropropene	U	0.50	ug/L	1	1	1.0	0.19	0.50
Toluene	U	0.50	ug/L	1	1	1.0	0.27	0.50
4-Methyl-2-Pentanone	U	2.5	ug/L	1	5	5.0	1.3	2.5
Tetrachloroethene	U	0.50	ug/L	1	1	1.0	0.40	0.50
trans-1,3-Dichloropropene	U	0.50	ug/L	1	1	1.0	0.20	0.50
1,1,2-Trichloroethane	U	0.50	ug/L	1	1	1.0	0.33	0.50
Dibromochloromethane	U	0.50	ug/L	1	1	1.0	0.30	0.50
1,3-Dichloropropane	U	0.50	ug/L	1	1	1.0	0.22	0.50

600 Technology Way
P.O. Box 540, Scarborough, ME 04070
Tel:(207) 874-2400 Fax:(207) 775-4029

Report of Analytical Results

Client: Tetra Tech NUS, Inc.
Lab ID: SD3639-1
Client ID: DA-TB02-062210
Project: CTO WE19 NS Newport, SW
SDG: WE19-1

Sample Date: 22-JUN-10
Received Date: 23-JUN-10
Extract Date: 25-JUN-10
Extracted By: DJP
Extraction Method:
Lab Prep Batch: WG79069

Analysis Date: 25-JUN-10
Analyst: DJP
Analysis Method: SW846 8260B
Matrix: AQ
% Solids: NA
Report Date: 15-JUL-10

Compound	Qualifier	Result	Units	Dilution	LOQ	ADJ LOQ	ADJ MDL	ADJ LOD
1,2-Dibromoethane	U	0.50	ug/L	1	1	1.0	0.22	0.50
2-Hexanone	U	2.5	ug/L	1	5	5.0	1.7	2.5
Chlorobenzene	U	0.50	ug/L	1	1	1.0	0.22	0.50
Ethylbenzene	U	0.50	ug/L	1	1	1.0	0.21	0.50
1,1,1,2-Tetrachloroethane	U	0.50	ug/L	1	1	1.0	0.19	0.50
m+p-Xylenes	U	1.0	ug/L	1	2	2.0	0.59	1.0
o-Xylene	U	0.50	ug/L	1	1	1.0	0.25	0.50
Styrene	U	0.50	ug/L	1	1	1.0	0.23	0.50
Bromoform	U	0.50	ug/L	1	1	1.0	0.23	0.50
Isopropylbenzene	U	0.50	ug/L	1	1	1.0	0.23	0.50
Bromobenzene	U	0.50	ug/L	1	1	1.0	0.24	0.50
N-Propylbenzene	U	0.50	ug/L	1	1	1.0	0.26	0.50
1,1,2,2-Tetrachloroethane	U	0.50	ug/L	1	1	1.0	0.38	0.50
1,3,5-Trimethylbenzene	U	0.50	ug/L	1	1	1.0	0.20	0.50
2-Chlorotoluene	U	0.50	ug/L	1	1	1.0	0.20	0.50
1,2,3-Trichloropropane	U	0.50	ug/L	1	1	1.0	0.19	0.50
4-Chlorotoluene	U	0.50	ug/L	1	1	1.0	0.26	0.50
tert-Butylbenzene	U	0.50	ug/L	1	1	1.0	0.31	0.50
1,2,4-Trimethylbenzene	U	0.50	ug/L	1	1	1.0	0.19	0.50
P-Isopropyltoluene	U	0.50	ug/L	1	1	1.0	0.25	0.50
1,3-Dichlorobenzene	U	0.50	ug/L	1	1	1.0	0.26	0.50
1,4-Dichlorobenzene	U	0.50	ug/L	1	1	1.0	0.24	0.50
N-Butylbenzene	U	0.50	ug/L	1	1	1.0	0.23	0.50
sec-Butylbenzene	U	0.50	ug/L	1	1	1.0	0.21	0.50
1,2-Dichlorobenzene	U	0.50	ug/L	1	1	1.0	0.15	0.50
1,2-Dibromo-3-Chloropropane	U	0.75	ug/L	1	1	1.0	0.50	0.75
Hexachlorobutadiene	U	0.50	ug/L	1	1	1.0	0.52	0.50
1,2,4-Trichlorobenzene	U	0.50	ug/L	1	1	1.0	0.37	0.50
1,2,3-Trichlorobenzene	U	0.50	ug/L	1	1	1.0	0.20	0.50
P-Bromofluorobenzene		105.	%					
Toluene-d8		109.	%					
1,2-Dichloroethane-d4		119.	%					
Dibromofluoromethane		112.	%					

600 Technology Way
P.O. Box 540, Scarborough, ME 04070
Tel:(207) 874-2400 Fax:(207) 775-4029

http://www.katahdinlab.com

Katahdin
ANALYTICAL SERVICES

Cert No E87604

Report of Analytical Results

Client: Tetra Tech NUS, Inc.
Lab ID: SD3717-1
Client ID: DA-TB062310
Project: CTO WE19 NS Newport, SW
SDG: WE19-1

Sample Date: 23-JUN-10
Received Date: 25-JUN-10
Extract Date: 02-JUL-10
Extracted By: DJP
Extraction Method:
Lab Prep Batch: WG79333

Analysis Date: 02-JUL-10
Analyst: DJP
Analysis Method: SW846 8260B
Matrix: AQ
% Solids: NA
Report Date: 15-JUL-10

Compound	Qualifier	Result	Units	Dilution	LOQ	ADJ LOQ	ADJ MDL	ADJ LOD
Dichlorodifluoromethane	U	1.0	ug/L	1	2	2.0	0.24	1.0
Chloromethane	U	1.0	ug/L	1	2	2.0	0.36	1.0
Vinyl Chloride	U	1.0	ug/L	1	2	2.0	0.25	1.0
Bromomethane	U	1.0	ug/L	1	2	2.0	0.49	1.0
Chloroethane	U	1.0	ug/L	1	2	2.0	0.55	1.0
Trichlorofluoromethane	U	1.0	ug/L	1	2	2.0	0.24	1.0
1,1-Dichloroethene	U	0.50	ug/L	1	1	1.0	0.35	0.50
Carbon Disulfide	U	0.50	ug/L	1	1	1.0	0.25	0.50
Methylene Chloride	U	2.5	ug/L	1	5	5.0	1.1	2.5
Acetone	U	2.5	ug/L	1	5	5.0	2.2	2.5
trans-1,2-Dichloroethene	U	0.50	ug/L	1	1	1.0	0.25	0.50
Methyl tert-butyl Ether	U	0.50	ug/L	1	1	1.0	0.36	0.50
1,1-Dichloroethane	U	0.50	ug/L	1	1	1.0	0.21	0.50
cis-1,2-Dichloroethene	U	0.50	ug/L	1	1	1.0	0.21	0.50
2,2-Dichloropropane	U	0.50	ug/L	1	1	1.0	0.25	0.50
Bromochloromethane	U	0.50	ug/L	1	1	1.0	0.21	0.50
Chloroform	U	0.50	ug/L	1	1	1.0	0.32	0.50
Carbon Tetrachloride	U	0.50	ug/L	1	1	1.0	0.22	0.50
1,1,1-Trichloroethane	U	0.50	ug/L	1	1	1.0	0.20	0.50
1,1-Dichloropropene	U	0.50	ug/L	1	1	1.0	0.21	0.50
2-Butanone	U	2.5	ug/L	1	5	5.0	1.3	2.5
Benzene	U	0.50	ug/L	1	1	1.0	0.26	0.50
1,2-Dichloroethane	U	0.50	ug/L	1	1	1.0	0.20	0.50
Trichloroethene	U	0.50	ug/L	1	1	1.0	0.28	0.50
Dibromomethane	U	0.50	ug/L	1	1	1.0	0.46	0.50
1,2-Dichloropropane	U	0.50	ug/L	1	1	1.0	0.25	0.50
Bromodichloromethane	U	0.50	ug/L	1	1	1.0	0.33	0.50
cis-1,3-Dichloropropene	U	0.50	ug/L	1	1	1.0	0.19	0.50
Toluene	U	0.50	ug/L	1	1	1.0	0.27	0.50
4-Methyl-2-Pentanone	U	2.5	ug/L	1	5	5.0	1.3	2.5
Tetrachloroethene	U	0.50	ug/L	1	1	1.0	0.40	0.50
trans-1,3-Dichloropropene	U	0.50	ug/L	1	1	1.0	0.20	0.50
1,1,2-Trichloroethane	U	0.50	ug/L	1	1	1.0	0.33	0.50
Dibromochloromethane	U	0.50	ug/L	1	1	1.0	0.30	0.50
1,3-Dichloropropane	U	0.50	ug/L	1	1	1.0	0.22	0.50

600 Technology Way
P.O. Box 540, Scarborough, ME 04070
Tel:(207) 874-2400 Fax:(207) 775-4029

Report of Analytical Results

Client: Tetra Tech NUS, Inc.
Lab ID: SD3717-1
Client ID: DA-TB062310
Project: CTO WE19 NS Newport, SW
SDG: WE19-1

Sample Date: 23-JUN-10
Received Date: 25-JUN-10
Extract Date: 02-JUL-10
Extracted By: DJP
Extraction Method:
Lab Prep Batch: WG79333

Analysis Date: 02-JUL-10
Analyst: DJP
Analysis Method: SW846 8260B
Matrix: AQ
% Solids: NA
Report Date: 15-JUL-10

Compound	Qualifier	Result	Units	Dilution	LOQ	ADJ LOQ	ADJ MDL	ADJ LOD
1,2-Dibromoethane	U	0.50	ug/L	1	1	1.0	0.22	0.50
2-Hexanone	U	2.5	ug/L	1	5	5.0	1.7	2.5
Chlorobenzene	U	0.50	ug/L	1	1	1.0	0.22	0.50
Ethylbenzene	U	0.50	ug/L	1	1	1.0	0.21	0.50
1,1,1,2-Tetrachloroethane	U	0.50	ug/L	1	1	1.0	0.19	0.50
m+p-Xylenes	U	1.0	ug/L	1	2	2.0	0.59	1.0
o-Xylene	U	0.50	ug/L	1	1	1.0	0.25	0.50
Styrene	U	0.50	ug/L	1	1	1.0	0.23	0.50
Bromoform	U	0.50	ug/L	1	1	1.0	0.23	0.50
Isopropylbenzene	U	0.50	ug/L	1	1	1.0	0.23	0.50
Bromobenzene	U	0.50	ug/L	1	1	1.0	0.24	0.50
N-Propylbenzene	U	0.50	ug/L	1	1	1.0	0.26	0.50
1,1,2,2-Tetrachloroethane	U	0.50	ug/L	1	1	1.0	0.38	0.50
1,3,5-Trimethylbenzene	U	0.50	ug/L	1	1	1.0	0.20	0.50
2-Chlorotoluene	U	0.50	ug/L	1	1	1.0	0.20	0.50
1,2,3-Trichloropropane	U	0.50	ug/L	1	1	1.0	0.19	0.50
4-Chlorotoluene	U	0.50	ug/L	1	1	1.0	0.26	0.50
tert-Butylbenzene	U	0.50	ug/L	1	1	1.0	0.31	0.50
1,2,4-Trimethylbenzene	U	0.50	ug/L	1	1	1.0	0.19	0.50
P-Isopropyltoluene	U	0.50	ug/L	1	1	1.0	0.25	0.50
1,3-Dichlorobenzene	U	0.50	ug/L	1	1	1.0	0.26	0.50
1,4-Dichlorobenzene	U	0.50	ug/L	1	1	1.0	0.24	0.50
N-Butylbenzene	U	0.50	ug/L	1	1	1.0	0.23	0.50
sec-Butylbenzene	U	0.50	ug/L	1	1	1.0	0.21	0.50
1,2-Dichlorobenzene	U	0.50	ug/L	1	1	1.0	0.15	0.50
1,2-Dibromo-3-Chloropropane	U	0.75	ug/L	1	1	1.0	0.50	0.75
Hexachlorobutadiene	U	0.50	ug/L	1	1	1.0	0.52	0.50
1,2,4-Trichlorobenzene	U	0.50	ug/L	1	1	1.0	0.37	0.50
1,2,3-Trichlorobenzene	U	0.50	ug/L	1	1	1.0	0.20	0.50
P-Bromofluorobenzene		89.6	%					
Toluene-d8		113.	%					
1,2-Dichloroethane-d4		118.	%					
Dibromofluoromethane		117.	%					

600 Technology Way
P.O. Box 540, Scarborough, ME 04070
Tel:(207) 874-2400 Fax:(207) 775-4029

http://www.katahdinlab.com

Report of Analytical Results

Client: Tetra Tech NUS, Inc.
Lab ID: SD3756-1
Client ID: DA-SW-B179-01-0610
Project: CTO WE19 NS Newport, SW
SDG: WE19-1

Sample Date: 25-JUN-10
Received Date: 26-JUN-10
Extract Date: 29-JUN-10
Extracted By: WS
Extraction Method: SW846 3510
Lab Prep Batch: WG79112

Analysis Date: 29-JUN-10
Analyst: JCG
Analysis Method: SW846 8270C
Matrix: AQ
% Solids: NA
Report Date: 02-JUL-10

Compound	Qualifier	Result	Units	Dilution	LOQ	ADJ LOQ	ADJ MDL	ADJ LOD
N-Nitrosodimethylamine	U	7.2	ug/L	1	10	9.6	2.1	7.2
Phenol	U	7.2	ug/L	1	10	9.6	1.7	7.2
Bis(2-Chloroethyl) Ether	U	7.2	ug/L	1	10	9.6	1.9	7.2
2-Chlorophenol	U	7.2	ug/L	1	10	9.6	3.1	7.2
1,3-Dichlorobenzene	U	7.2	ug/L	1	10	9.6	2.0	7.2
1,4-Dichlorobenzene	U	7.2	ug/L	1	10	9.6	2.1	7.2
1,2-Dichlorobenzene	U	7.2	ug/L	1	10	9.6	2.3	7.2
Benzyl Alcohol	U	14.	ug/L	1	20	19.	1.2	14.
2,2'-Oxybis(1-Chloropropane)	U	7.2	ug/L	1	10	9.6	2.0	7.2
2-Methylphenol	U	7.2	ug/L	1	10	9.6	3.6	7.2
Hexachloroethane	U	7.2	ug/L	1	10	9.6	2.2	7.2
N-Nitroso-Di-N-Propylamine	U	7.2	ug/L	1	10	9.6	1.8	7.2
3&4-Methylphenol	U	7.2	ug/L	1	10	9.6	5.4	7.2
Nitrobenzene	U	7.2	ug/L	1	10	9.6	3.0	7.2
Isophorone	U	7.2	ug/L	1	10	9.6	1.6	7.2
2-Nitrophenol	U	7.2	ug/L	1	10	9.6	2.6	7.2
2,4-Dimethylphenol	U	7.2	ug/L	1	10	9.6	4.2	7.2
Bis(2-Chloroethoxy) Methane	U	7.2	ug/L	1	10	9.6	2.0	7.2
2,4-Dichlorophenol	U	7.2	ug/L	1	10	9.6	2.9	7.2
1,2,4-Trichlorobenzene	U	7.2	ug/L	1	10	9.6	2.0	7.2
Naphthalene	U	7.2	ug/L	1	10	9.6	2.1	7.2
Benzoic Acid	U	18.	ug/L	1	25	24.	2.9	18.
4-Chloroaniline	U	7.2	ug/L	1	10	9.6	1.8	7.2
Hexachlorobutadiene	U	7.2	ug/L	1	10	9.6	1.7	7.2
4-Chloro-3-Methylphenol	U	7.2	ug/L	1	10	9.6	3.5	7.2
2-Methylnaphthalene	U	7.2	ug/L	1	10	9.6	3.1	7.2
2,4,6-Trichlorophenol	U	7.2	ug/L	1	10	9.6	2.6	7.2
2,4,5-Trichlorophenol	U	18.	ug/L	1	25	24.	3.5	18.
2-Chloronaphthalene	U	7.2	ug/L	1	10	9.6	2.8	7.2
2-Nitroaniline	U	18.	ug/L	1	25	24.	1.7	18.
Acenaphthylene	U	7.2	ug/L	1	10	9.6	1.4	7.2
Dimethyl Phthalate	U	7.2	ug/L	1	10	9.6	1.9	7.2
2,6-Dinitrotoluene	U	7.2	ug/L	1	10	9.6	1.9	7.2
Acenaphthene	U	7.2	ug/L	1	10	9.6	1.4	7.2
3-Nitroaniline	U	18.	ug/L	1	25	24.	1.4	18.

600 Technology Way
P.O. Box 540, Scarborough, ME 04070
Tel:(207) 874-2400 Fax:(207) 775-4029

http://www.katahdinlab.com

Report of Analytical Results

Client: Tetra Tech NUS, Inc.
Lab ID: SD3756-1
Client ID: DA-SW-B179-01-0610
Project: CTO WE19 NS Newport, SW
SDG: WE19-1

Sample Date: 25-JUN-10
Received Date: 26-JUN-10
Extract Date: 29-JUN-10
Extracted By: WS
Extraction Method: SW846 3510
Lab Prep Batch: WG79112

Analysis Date: 29-JUN-10
Analyst: JCG
Analysis Method: SW846 8270C
Matrix: AQ
% Solids: NA
Report Date: 02-JUL-10

Compound	Qualifier	Result	Units	Dilution	LOQ	ADJ LOQ	ADJ MDL	ADJ LOD
2,4-Dinitrophenol	U	18.	ug/L	1	25	24.	0.96	18.
Dibenzofuran	U	7.2	ug/L	1	10	9.6	1.5	7.2
4-Nitrophenol	U	18.	ug/L	1	25	24.	1.7	18.
2,4-Dinitrotoluene	U	7.2	ug/L	1	10	9.6	2.1	7.2
Fluorene	U	7.2	ug/L	1	10	9.6	2.0	7.2
Diethylphthalate	U	7.2	ug/L	1	10	9.6	1.9	7.2
4-Chlorophenyl-Phenylether	U	7.2	ug/L	1	10	9.6	2.1	7.2
4-Nitroaniline	U	18.	ug/L	1	25	24.	1.5	18.
4,6-Dinitro-2-Methylphenol	U	18.	ug/L	1	25	24.	1.9	18.
N-Nitrosodiphenylamine	U	7.2	ug/L	1	10	9.6	3.6	7.2
1,2-Diphenylhydrazine	U	14.	ug/L	1	20	19.	1.9	14.
4-Bromophenyl-Phenylether	U	7.2	ug/L	1	10	9.6	1.8	7.2
Hexachlorobenzene	U	7.2	ug/L	1	10	9.6	2.0	7.2
Pentachlorophenol	U	18.	ug/L	1	25	24.	2.2	18.
Phenanthrene	U	7.2	ug/L	1	10	9.6	2.3	7.2
Anthracene	U	7.2	ug/L	1	10	9.6	1.6	7.2
Carbazole	U	7.2	ug/L	1	10	9.6	2.0	7.2
Di-N-Butylphthalate	U	7.2	ug/L	1	10	9.6	2.4	7.2
Fluoranthene	U	7.2	ug/L	1	10	9.6	2.3	7.2
Benzidine	U	36.	ug/L	1	50	48.	16.	36.
Pyrene	U	7.2	ug/L	1	10	9.6	1.8	7.2
Butylbenzylphthalate	U	7.2	ug/L	1	10	9.6	1.8	7.2
Benzo(a)anthracene	U	7.2	ug/L	1	10	9.6	1.5	7.2
Chrysene	U	7.2	ug/L	1	10	9.6	1.6	7.2
3,3'-Dichlorobenzidine	U	7.2	ug/L	1	10	9.6	1.0	7.2
Bis(2-Ethylhexyl) Phthalate	JB	3.8	ug/L	1	10	9.6	1.7	7.2
Di-N-Octylphthalate	U	7.2	ug/L	1	10	9.6	1.7	7.2
Benzo(b)fluoranthene	U	7.2	ug/L	1	10	9.6	1.2	7.2
Benzo(k)fluoranthene	U	7.2	ug/L	1	10	9.6	1.5	7.2
Benzo(a)pyrene	U	7.2	ug/L	1	10	9.6	1.2	7.2
Indeno(1,2,3-cd)pyrene	U	7.2	ug/L	1	10	9.6	1.8	7.2
Dibenzo(a,h)anthracene	U	7.2	ug/L	1	10	9.6	1.6	7.2
Benzo(g,h,i)perylene	U	7.2	ug/L	1	10	9.6	1.4	7.2
1,1'-Biphenyl	U	7.2	ug/L	1	10	9.6	2.6	7.2
2,6-Dichlorophenol	U	7.2	ug/L	1	10	9.6	3.8	7.2

600 Technology Way
P.O. Box 540, Scarborough, ME 04070
Tel:(207) 874-2400 Fax:(207) 775-4029

http://www.katahdinlab.com

Report of Analytical Results

Client: Tetra Tech NUS, Inc.
Lab ID: SD3756-1
Client ID: DA-SW-B179-01-0610
Project: CTO WE19 NS Newport, SW
SDG: WE19-1

Sample Date: 25-JUN-10
Received Date: 26-JUN-10
Extract Date: 29-JUN-10
Extracted By: WS
Extraction Method: SW846 3510
Lab Prep Batch: WG79112

Analysis Date: 29-JUN-10
Analyst: JCG
Analysis Method: SW846 8270C
Matrix: AQ
% Solids: NA
Report Date: 02-JUL-10

Compound	Qualifier	Result	Units	Dilution	LOQ	ADJ LOQ	ADJ MDL	ADJ LOD
N-Nitrosopyrrolidine	U	7.2	ug/L	1	10	9.6	1.2	7.2
2-Fluorophenol		40.8	%					
Phenol-D6		27.6	%					
Nitrobenzene-d5		70.0	%					
2-Fluorobiphenyl		76.5	%					
2,4,6-tribromophenol		82.9	%					
Terphenyl-d14		86.3	%					

600 Technology Way
P.O. Box 540, Scarborough, ME 04070
Tel:(207) 874-2400 Fax:(207) 775-4029

http://www.katahdinlab.com

Report of Analytical Results

Client: Tetra Tech NUS, Inc.
Lab ID: SD3756-2
Client ID: DA-SW-B179-02-0610
Project: CTO WE19 NS Newport, SW
SDG: WE19-1

Sample Date: 25-JUN-10
Received Date: 26-JUN-10
Extract Date: 29-JUN-10
Extracted By: WS
Extraction Method: SW846 3510
Lab Prep Batch: WG79112

Analysis Date: 29-JUN-10
Analyst: JCG
Analysis Method: SW846 8270C
Matrix: AQ
% Solids: NA
Report Date: 02-JUL-10

Compound	Qualifier	Result	Units	Dilution	LOQ	ADJ LOQ	ADJ MDL	ADJ LOD
N-Nitrosodimethylamine	U	7.6	ug/L	1	10	10.	2.2	7.6
Phenol	U	7.6	ug/L	1	10	10.	1.8	7.6
Bis(2-Chloroethyl) Ether	U	7.6	ug/L	1	10	10.	2.0	7.6
2-Chlorophenol	U	7.6	ug/L	1	10	10.	3.3	7.6
1,3-Dichlorobenzene	U	7.6	ug/L	1	10	10.	2.1	7.6
1,4-Dichlorobenzene	U	7.6	ug/L	1	10	10.	2.2	7.6
1,2-Dichlorobenzene	U	7.6	ug/L	1	10	10.	2.4	7.6
Benzyl Alcohol	U	15.	ug/L	1	20	20.	1.2	15.
2,2'-Oxybis(1-Chloropropane)	U	7.6	ug/L	1	10	10.	2.1	7.6
2-Methylphenol	U	7.6	ug/L	1	10	10.	3.9	7.6
Hexachloroethane	U	7.6	ug/L	1	10	10.	2.3	7.6
N-Nitroso-Di-N-Propylamine	U	7.6	ug/L	1	10	10.	1.9	7.6
3&4-Methylphenol	U	7.6	ug/L	1	10	10.	5.7	7.6
Nitrobenzene	U	7.6	ug/L	1	10	10.	3.2	7.6
Isophorone	U	7.6	ug/L	1	10	10.	1.7	7.6
2-Nitrophenol	U	7.6	ug/L	1	10	10.	2.8	7.6
2,4-Dimethylphenol	U	7.6	ug/L	1	10	10.	4.5	7.6
Bis(2-Chloroethoxy) Methane	U	7.6	ug/L	1	10	10.	2.1	7.6
2,4-Dichlorophenol	U	7.6	ug/L	1	10	10.	3.1	7.6
1,2,4-Trichlorobenzene	U	7.6	ug/L	1	10	10.	2.1	7.6
Naphthalene	U	7.6	ug/L	1	10	10.	2.2	7.6
Benzoic Acid	U	19.	ug/L	1	25	26.	3.1	19.
4-Chloroaniline	U	7.6	ug/L	1	10	10.	1.9	7.6
Hexachlorobutadiene	U	7.6	ug/L	1	10	10.	1.8	7.6
4-Chloro-3-Methylphenol	U	7.6	ug/L	1	10	10.	3.7	7.6
2-Methylnaphthalene	U	7.6	ug/L	1	10	10.	3.3	7.6
2,4,6-Trichlorophenol	U	7.6	ug/L	1	10	10.	2.8	7.6
2,4,5-Trichlorophenol	U	19.	ug/L	1	25	26.	3.7	19.
2-Chloronaphthalene	U	7.6	ug/L	1	10	10.	3.0	7.6
2-Nitroaniline	U	19.	ug/L	1	25	26.	1.8	19.
Acenaphthylene	U	7.6	ug/L	1	10	10.	1.5	7.6
Dimethyl Phthalate	U	7.6	ug/L	1	10	10.	2.0	7.6
2,6-Dinitrotoluene	U	7.6	ug/L	1	10	10.	2.0	7.6
Acenaphthene	U	7.6	ug/L	1	10	10.	1.5	7.6
3-Nitroaniline	U	19.	ug/L	1	25	26.	1.5	19.

600 Technology Way
P.O. Box 540, Scarborough, ME 04070
Tel:(207) 874-2400 Fax:(207) 775-4029

http://www.katahdinlab.com

Report of Analytical Results

Client: Tetra Tech NUS, Inc.
Lab ID: SD3756-2
Client ID: DA-SW-B179-02-0610
Project: CTO WE19 NS Newport, SW
SDG: WE19-1

Sample Date: 25-JUN-10
Received Date: 26-JUN-10
Extract Date: 29-JUN-10
Extracted By: WS
Extraction Method: SW846 3510
Lab Prep Batch: WG79112

Analysis Date: 29-JUN-10
Analyst: JCG
Analysis Method: SW846 8270C
Matrix: AQ
% Solids: NA
Report Date: 02-JUL-10

Compound	Qualifier	Result	Units	Dilution	LOQ	ADJ LOQ	ADJ MDL	ADJ LOD
2,4-Dinitrophenol	U	19.	ug/L	1	25	26.	1.0	19.
Dibenzofuran	U	7.6	ug/L	1	10	10.	1.6	7.6
4-Nitrophenol	U	19.	ug/L	1	25	26.	1.8	19.
2,4-Dinitrotoluene	U	7.6	ug/L	1	10	10.	2.2	7.6
Fluorene	U	7.6	ug/L	1	10	10.	2.1	7.6
Diethylphthalate	U	7.6	ug/L	1	10	10.	2.0	7.6
4-Chlorophenyl-Phenylether	U	7.6	ug/L	1	10	10.	2.2	7.6
4-Nitroaniline	U	19.	ug/L	1	25	26.	1.6	19.
4,6-Dinitro-2-Methylphenol	U	19.	ug/L	1	25	26.	2.0	19.
N-Nitrosodiphenylamine	U	7.6	ug/L	1	10	10.	3.8	7.6
1,2-Diphenylhydrazine	U	15.	ug/L	1	20	20.	2.0	15.
4-Bromophenyl-Phenylether	U	7.6	ug/L	1	10	10.	1.9	7.6
Hexachlorobenzene	U	7.6	ug/L	1	10	10.	2.1	7.6
Pentachlorophenol	U	19.	ug/L	1	25	26.	2.3	19.
Phenanthrene	U	7.6	ug/L	1	10	10.	2.4	7.6
Anthracene	U	7.6	ug/L	1	10	10.	1.7	7.6
Carbazole	U	7.6	ug/L	1	10	10.	2.1	7.6
Di-N-Butylphthalate	U	7.6	ug/L	1	10	10.	2.6	7.6
Fluoranthene	U	7.6	ug/L	1	10	10.	2.4	7.6
Benzidine	U	38.	ug/L	1	50	51.	16.	38.
Pyrene	U	7.6	ug/L	1	10	10.	1.9	7.6
Butylbenzylphthalate	U	7.6	ug/L	1	10	10.	1.9	7.6
Benzo(a)anthracene	U	7.6	ug/L	1	10	10.	1.6	7.6
Chrysene	U	7.6	ug/L	1	10	10.	1.7	7.6
3,3'-Dichlorobenzidine	U	7.6	ug/L	1	10	10.	1.1	7.6
Bis(2-Ethylhexyl) Phthalate	JB	9.1	ug/L	1	10	10.	1.8	7.6
Di-N-Octylphthalate	U	7.6	ug/L	1	10	10.	1.8	7.6
Benzo(b)fluoranthene	U	7.6	ug/L	1	10	10.	1.2	7.6
Benzo(k)fluoranthene	U	7.6	ug/L	1	10	10.	1.6	7.6
Benzo(a)pyrene	U	7.6	ug/L	1	10	10.	1.2	7.6
Indeno(1,2,3-cd)pyrene	U	7.6	ug/L	1	10	10.	1.9	7.6
Dibenzo(a,h)anthracene	U	7.6	ug/L	1	10	10.	1.7	7.6
Benzo(g,h,i)perylene	U	7.6	ug/L	1	10	10.	1.5	7.6
1,1'-Biphenyl	U	7.6	ug/L	1	10	10.	2.8	7.6
2,6-Dichlorophenol	U	7.6	ug/L	1	10	10.	4.1	7.6

600 Technology Way
P.O. Box 540, Scarborough, ME 04070
Tel:(207) 874-2400 Fax:(207) 775-4029

http://www.katahdinlab.com

Report of Analytical Results

Client: Tetra Tech NUS, Inc.
Lab ID: SD3756-2
Client ID: DA-SW-B179-02-0610
Project: CTO WE19 NS Newport, SW
SDG: WE19-1

Sample Date: 25-JUN-10
Received Date: 26-JUN-10
Extract Date: 29-JUN-10
Extracted By: WS
Extraction Method: SW846 3510
Lab Prep Batch: WG79112

Analysis Date: 29-JUN-10
Analyst: JCG
Analysis Method: SW846 8270C
Matrix: AQ
% Solids: NA
Report Date: 02-JUL-10

Compound	Qualifier	Result	Units	Dilution	LOQ	ADJ LOQ	ADJ MDL	ADJ LOD
N-Nitrosopyrrolidine	U	7.6	ug/L	1	10	10.	1.3	7.6
2-Fluorophenol		40.3	%					
Phenol-D6		27.4	%					
Nitrobenzene-d5		76.4	%					
2-Fluorobiphenyl		78.9	%					
2,4,6-tribromophenol		81.3	%					
Terphenyl-d14		84.0	%					

600 Technology Way
P.O. Box 540, Scarborough, ME 04070
Tel:(207) 874-2400 Fax:(207) 775-4029

http://www.katahdinlab.com

Katahdin
ANALYTICAL SERVICES

Cert No E87604

Report of Analytical Results

Client: Tetra Tech NUS, Inc.
Lab ID: SD3756-3
Client ID: DA-SW-B179-04-0610
Project: CTO WE19 NS Newport, SW
SDG: WE19-1

Sample Date: 25-JUN-10
Received Date: 26-JUN-10
Extract Date: 29-JUN-10
Extracted By: WS
Extraction Method: SW846 3510
Lab Prep Batch: WG79112

Analysis Date: 29-JUN-10
Analyst: JCG
Analysis Method: SW846 8270C
Matrix: AQ
% Solids: NA
Report Date: 02-JUL-10

Compound	Qualifier	Result	Units	Dilution	LOQ	ADJ LOQ	ADJ MDL	ADJ LOD
N-Nitrosodimethylamine	U	7.8	ug/L	1	10	10.	2.3	7.8
Phenol	U	7.8	ug/L	1	10	10.	1.9	7.8
Bis(2-Chloroethyl) Ether	U	7.8	ug/L	1	10	10.	2.1	7.8
2-Chlorophenol	U	7.8	ug/L	1	10	10.	3.3	7.8
1,3-Dichlorobenzene	U	7.8	ug/L	1	10	10.	2.2	7.8
1,4-Dichlorobenzene	U	7.8	ug/L	1	10	10.	2.3	7.8
1,2-Dichlorobenzene	U	7.8	ug/L	1	10	10.	2.5	7.8
Benzyl Alcohol	U	16.	ug/L	1	20	21.	1.2	16.
2,2'-Oxybis(1-Chloropropane)	U	7.8	ug/L	1	10	10.	2.2	7.8
2-Methylphenol	U	7.8	ug/L	1	10	10.	4.0	7.8
Hexachloroethane	U	7.8	ug/L	1	10	10.	2.4	7.8
N-Nitroso-Di-N-Propylamine	U	7.8	ug/L	1	10	10.	2.0	7.8
3&4-Methylphenol	U	7.8	ug/L	1	10	10.	5.8	7.8
Nitrobenzene	U	7.8	ug/L	1	10	10.	3.2	7.8
Isophorone	U	7.8	ug/L	1	10	10.	1.8	7.8
2-Nitrophenol	U	7.8	ug/L	1	10	10.	2.8	7.8
2,4-Dimethylphenol	U	7.8	ug/L	1	10	10.	4.6	7.8
Bis(2-Chloroethoxy) Methane	U	7.8	ug/L	1	10	10.	2.2	7.8
2,4-Dichlorophenol	U	7.8	ug/L	1	10	10.	3.1	7.8
1,2,4-Trichlorobenzene	U	7.8	ug/L	1	10	10.	2.2	7.8
Naphthalene	U	7.8	ug/L	1	10	10.	2.3	7.8
Benzoic Acid	U	20.	ug/L	1	25	26.	3.1	20.
4-Chloroaniline	U	7.8	ug/L	1	10	10.	2.0	7.8
Hexachlorobutadiene	U	7.8	ug/L	1	10	10.	1.9	7.8
4-Chloro-3-Methylphenol	U	7.8	ug/L	1	10	10.	3.8	7.8
2-Methylnaphthalene	U	7.8	ug/L	1	10	10.	3.3	7.8
2,4,6-Trichlorophenol	U	7.8	ug/L	1	10	10.	2.8	7.8
2,4,5-Trichlorophenol	U	20.	ug/L	1	25	26.	3.8	20.
2-Chloronaphthalene	U	7.8	ug/L	1	10	10.	3.0	7.8
2-Nitroaniline	U	20.	ug/L	1	25	26.	1.9	20.
Acenaphthylene	U	7.8	ug/L	1	10	10.	1.6	7.8
Dimethyl Phthalate	U	7.8	ug/L	1	10	10.	2.1	7.8
2,6-Dinitrotoluene	U	7.8	ug/L	1	10	10.	2.1	7.8
Acenaphthene	U	7.8	ug/L	1	10	10.	1.6	7.8
3-Nitroaniline	U	20.	ug/L	1	25	26.	1.6	20.

600 Technology Way
P.O. Box 540, Scarborough, ME 04070
Tel:(207) 874-2400 Fax:(207) 775-4029

http://www.katahdinlab.com

Report of Analytical Results

Client: Tetra Tech NUS, Inc.
Lab ID: SD3756-3
Client ID: DA-SW-B179-04-0610
Project: CTO WE19 NS Newport, SW
SDG: WE19-1

Sample Date: 25-JUN-10
Received Date: 26-JUN-10
Extract Date: 29-JUN-10
Extracted By: WS
Extraction Method: SW846 3510
Lab Prep Batch: WG79112

Analysis Date: 29-JUN-10
Analyst: JCG
Analysis Method: SW846 8270C
Matrix: AQ
% Solids: NA
Report Date: 02-JUL-10

Compound	Qualifier	Result	Units	Dilution	LOQ	ADJ LOQ	ADJ MDL	ADJ LOD
2,4-Dinitrophenol	U	20.	ug/L	1	25	26.	1.0	20.
Dibenzofuran	U	7.8	ug/L	1	10	10.	1.7	7.8
4-Nitrophenol	U	20.	ug/L	1	25	26.	1.9	20.
2,4-Dinitrotoluene	U	7.8	ug/L	1	10	10.	2.3	7.8
Fluorene	U	7.8	ug/L	1	10	10.	2.2	7.8
Diethylphthalate	U	7.8	ug/L	1	10	10.	2.1	7.8
4-Chlorophenyl-Phenylether	U	7.8	ug/L	1	10	10.	2.3	7.8
4-Nitroaniline	U	20.	ug/L	1	25	26.	1.7	20.
4,6-Dinitro-2-Methylphenol	U	20.	ug/L	1	25	26.	2.1	20.
N-Nitrosodiphenylamine	U	7.8	ug/L	1	10	10.	3.8	7.8
1,2-Diphenylhydrazine	U	16.	ug/L	1	20	21.	2.1	16.
4-Bromophenyl-Phenylether	U	7.8	ug/L	1	10	10.	2.0	7.8
Hexachlorobenzene	U	7.8	ug/L	1	10	10.	2.2	7.8
Pentachlorophenol	U	20.	ug/L	1	25	26.	2.4	20.
Phenanthrene	U	7.8	ug/L	1	10	10.	2.5	7.8
Anthracene	U	7.8	ug/L	1	10	10.	1.8	7.8
Carbazole	U	7.8	ug/L	1	10	10.	2.2	7.8
Di-N-Butylphthalate	U	7.8	ug/L	1	10	10.	2.6	7.8
Fluoranthene	U	7.8	ug/L	1	10	10.	2.5	7.8
Benzidine	U	39.	ug/L	1	50	52.	17.	39.
Pyrene	U	7.8	ug/L	1	10	10.	2.0	7.8
Butylbenzylphthalate	U	7.8	ug/L	1	10	10.	2.0	7.8
Benzo(a)anthracene	U	7.8	ug/L	1	10	10.	1.7	7.8
Chrysene	U	7.8	ug/L	1	10	10.	1.8	7.8
3,3'-Dichlorobenzidine	U	7.8	ug/L	1	10	10.	1.1	7.8
Bis(2-Ethylhexyl) Phthalate	JB	6.5	ug/L	1	10	10.	1.9	7.8
Di-N-Octylphthalate	U	7.8	ug/L	1	10	10.	1.9	7.8
Benzo(b)fluoranthene	U	7.8	ug/L	1	10	10.	1.2	7.8
Benzo(k)fluoranthene	U	7.8	ug/L	1	10	10.	1.7	7.8
Benzo(a)pyrene	U	7.8	ug/L	1	10	10.	1.2	7.8
Indeno(1,2,3-cd)pyrene	U	7.8	ug/L	1	10	10.	2.0	7.8
Dibenzo(a,h)anthracene	U	7.8	ug/L	1	10	10.	1.8	7.8
Benzo(g,h,i)perylene	U	7.8	ug/L	1	10	10.	1.6	7.8
1,1'-Biphenyl	U	7.8	ug/L	1	10	10.	2.8	7.8
2,6-Dichlorophenol	U	7.8	ug/L	1	10	10.	4.2	7.8

600 Technology Way
P.O. Box 540, Scarborough, ME 04070
Tel:(207) 874-2400 Fax:(207) 775-4029

http://www.katahdinlab.com

Report of Analytical Results

Client: Tetra Tech NUS, Inc.
Lab ID: SD3756-3
Client ID: DA-SW-B179-04-0610
Project: CTO WE19 NS Newport, SW
SDG: WE19-1

Sample Date: 25-JUN-10
Received Date: 26-JUN-10
Extract Date: 29-JUN-10
Extracted By: WS
Extraction Method: SW846 3510
Lab Prep Batch: WG79112

Analysis Date: 29-JUN-10
Analyst: JCG
Analysis Method: SW846 8270C
Matrix: AQ
% Solids: NA
Report Date: 02-JUL-10

Compound	Qualifier	Result	Units	Dilution	LOQ	ADJ LOQ	ADJ MDL	ADJ LOD
N-Nitrosopyrrolidine	U	7.8	ug/L	1	10	10.	1.4	7.8
2-Fluorophenol		35.8	%					
Phenol-D6		24.3	%					
Nitrobenzene-d5		65.2	%					
2-Fluorobiphenyl		66.6	%					
2,4,6-tribromophenol		72.4	%					
Terphenyl-d14		70.3	%					

600 Technology Way
P.O. Box 540, Scarborough, ME 04070
Tel:(207) 874-2400 Fax:(207) 775-4029

http://www.katahdinlab.com

Report of Analytical Results

Client: Tetra Tech NUS, Inc.
Lab ID: SD3756-4
Client ID: DA-SW-DUP01-062510
Project: CTO WE19 NS Newport, SW
SDG: WE19-1

Sample Date: 25-JUN-10
Received Date: 26-JUN-10
Extract Date: 29-JUN-10
Extracted By: WS
Extraction Method: SW846 3510
Lab Prep Batch: WG79112

Analysis Date: 29-JUN-10
Analyst: JCG
Analysis Method: SW846 8270C
Matrix: AQ
% Solids: NA
Report Date: 02-JUL-10

Compound	Qualifier	Result	Units	Dilution	LOQ	ADJ LOQ	ADJ MDL	ADJ LOD
N-Nitrosodimethylamine	U	7.3	ug/L	1	10	9.7	2.1	7.3
Phenol	U	7.3	ug/L	1	10	9.7	1.7	7.3
Bis(2-Chloroethyl) Ether	U	7.3	ug/L	1	10	9.7	1.9	7.3
2-Chlorophenol	U	7.3	ug/L	1	10	9.7	3.1	7.3
1,3-Dichlorobenzene	U	7.3	ug/L	1	10	9.7	2.0	7.3
1,4-Dichlorobenzene	U	7.3	ug/L	1	10	9.7	2.1	7.3
1,2-Dichlorobenzene	U	7.3	ug/L	1	10	9.7	2.3	7.3
Benzyl Alcohol	U	14.	ug/L	1	20	19.	1.2	14.
2,2'-Oxybis(1-Chloropropane)	U	7.3	ug/L	1	10	9.7	2.0	7.3
2-Methylphenol	U	7.3	ug/L	1	10	9.7	3.7	7.3
Hexachloroethane	U	7.3	ug/L	1	10	9.7	2.2	7.3
N-Nitroso-Di-N-Propylamine	U	7.3	ug/L	1	10	9.7	1.8	7.3
3&4-Methylphenol	U	7.3	ug/L	1	10	9.7	5.4	7.3
Nitrobenzene	U	7.3	ug/L	1	10	9.7	3.0	7.3
Isophorone	U	7.3	ug/L	1	10	9.7	1.6	7.3
2-Nitrophenol	U	7.3	ug/L	1	10	9.7	2.6	7.3
2,4-Dimethylphenol	U	7.3	ug/L	1	10	9.7	4.3	7.3
Bis(2-Chloroethoxy) Methane	U	7.3	ug/L	1	10	9.7	2.0	7.3
2,4-Dichlorophenol	U	7.3	ug/L	1	10	9.7	2.9	7.3
1,2,4-Trichlorobenzene	U	7.3	ug/L	1	10	9.7	2.0	7.3
Naphthalene	U	7.3	ug/L	1	10	9.7	2.1	7.3
Benzoic Acid	U	18.	ug/L	1	25	24.	2.9	18.
4-Chloroaniline	U	7.3	ug/L	1	10	9.7	1.8	7.3
Hexachlorobutadiene	U	7.3	ug/L	1	10	9.7	1.7	7.3
4-Chloro-3-Methylphenol	U	7.3	ug/L	1	10	9.7	3.5	7.3
2-Methylnaphthalene	U	7.3	ug/L	1	10	9.7	3.1	7.3
2,4,6-Trichlorophenol	U	7.3	ug/L	1	10	9.7	2.6	7.3
2,4,5-Trichlorophenol	U	18.	ug/L	1	25	24.	3.5	18.
2-Chloronaphthalene	U	7.3	ug/L	1	10	9.7	2.8	7.3
2-Nitroaniline	U	18.	ug/L	1	25	24.	1.7	18.
Acenaphthylene	U	7.3	ug/L	1	10	9.7	1.4	7.3
Dimethyl Phthalate	U	7.3	ug/L	1	10	9.7	2.0	7.3
2,6-Dinitrotoluene	U	7.3	ug/L	1	10	9.7	1.9	7.3
Acenaphthene	U	7.3	ug/L	1	10	9.7	1.4	7.3
3-Nitroaniline	U	18.	ug/L	1	25	24.	1.4	18.

600 Technology Way
P.O. Box 540, Scarborough, ME 04070
Tel:(207) 874-2400 Fax:(207) 775-4029

Report of Analytical Results

Client: Tetra Tech NUS, Inc.
Lab ID: SD3756-4
Client ID: DA-SW-DUP01-062510
Project: CTO WE19 NS Newport, SW
SDG: WE19-1

Sample Date: 25-JUN-10
Received Date: 26-JUN-10
Extract Date: 29-JUN-10
Extracted By: WS
Extraction Method: SW846 3510
Lab Prep Batch: WG79112

Analysis Date: 29-JUN-10
Analyst: JCG
Analysis Method: SW846 8270C
Matrix: AQ
% Solids: NA
Report Date: 02-JUL-10

Compound	Qualifier	Result	Units	Dilution	LOQ	ADJ LOQ	ADJ MDL	ADJ LOD
2,4-Dinitrophenol	U	18.	ug/L	1	25	24.	0.97	18.
Dibenzofuran	U	7.3	ug/L	1	10	9.7	1.6	7.3
4-Nitrophenol	U	18.	ug/L	1	25	24.	1.7	18.
2,4-Dinitrotoluene	U	7.3	ug/L	1	10	9.7	2.1	7.3
Fluorene	U	7.3	ug/L	1	10	9.7	2.0	7.3
Diethylphthalate	U	7.3	ug/L	1	10	9.7	1.9	7.3
4-Chlorophenyl-Phenylether	U	7.3	ug/L	1	10	9.7	2.1	7.3
4-Nitroaniline	U	18.	ug/L	1	25	24.	1.6	18.
4,6-Dinitro-2-Methylphenol	U	18.	ug/L	1	25	24.	1.9	18.
N-Nitrosodiphenylamine	U	7.3	ug/L	1	10	9.7	3.6	7.3
1,2-Diphenylhydrazine	U	14.	ug/L	1	20	19.	1.9	14.
4-Bromophenyl-Phenylether	U	7.3	ug/L	1	10	9.7	1.8	7.3
Hexachlorobenzene	U	7.3	ug/L	1	10	9.7	2.0	7.3
Pentachlorophenol	U	18.	ug/L	1	25	24.	2.2	18.
Phenanthrene	U	7.3	ug/L	1	10	9.7	2.3	7.3
Anthracene	U	7.3	ug/L	1	10	9.7	1.6	7.3
Carbazole	U	7.3	ug/L	1	10	9.7	2.0	7.3
Di-N-Butylphthalate	U	7.3	ug/L	1	10	9.7	2.4	7.3
Fluoranthene	U	7.3	ug/L	1	10	9.7	2.3	7.3
Benzidine	U	36.	ug/L	1	50	48.	16.	36.
Pyrene	U	7.3	ug/L	1	10	9.7	1.8	7.3
Butylbenzylphthalate	U	7.3	ug/L	1	10	9.7	1.8	7.3
Benzo(a)anthracene	U	7.3	ug/L	1	10	9.7	1.6	7.3
Chrysene	U	7.3	ug/L	1	10	9.7	1.6	7.3
3,3'-Dichlorobenzidine	U	7.3	ug/L	1	10	9.7	1.1	7.3
Bis(2-Ethylhexyl) Phthalate	U	7.3	ug/L	1	10	9.7	1.7	7.3
Di-N-Octylphthalate	U	7.3	ug/L	1	10	9.7	1.7	7.3
Benzo(b)fluoranthene	U	7.3	ug/L	1	10	9.7	1.2	7.3
Benzo(k)fluoranthene	U	7.3	ug/L	1	10	9.7	1.6	7.3
Benzo(a)pyrene	U	7.3	ug/L	1	10	9.7	1.2	7.3
Indeno(1,2,3-cd)pyrene	U	7.3	ug/L	1	10	9.7	1.8	7.3
Dibenzo(a,h)anthracene	U	7.3	ug/L	1	10	9.7	1.6	7.3
Benzo(g,h,i)perylene	U	7.3	ug/L	1	10	9.7	1.4	7.3
1,1'-Biphenyl	U	7.3	ug/L	1	10	9.7	2.6	7.3
2,6-Dichlorophenol	U	7.3	ug/L	1	10	9.7	3.9	7.3

600 Technology Way
P.O. Box 540, Scarborough, ME 04070
Tel:(207) 874-2400 Fax:(207) 775-4029

http://www.katahdinlab.com

Report of Analytical Results

Client: Tetra Tech NUS, Inc.
Lab ID: SD3756-4
Client ID: DA-SW-DUP01-062510
Project: CTO WE19 NS Newport, SW
SDG: WE19-1

Sample Date: 25-JUN-10
Received Date: 26-JUN-10
Extract Date: 29-JUN-10
Extracted By: WS
Extraction Method: SW846 3510
Lab Prep Batch: WG79112

Analysis Date: 29-JUN-10
Analyst: JCG
Analysis Method: SW846 8270C
Matrix: AQ
% Solids: NA
Report Date: 02-JUL-10

Compound	Qualifier	Result	Units	Dilution	LOQ	ADJ LOQ	ADJ MDL	ADJ LOD
N-Nitrosopyrrolidine	U	7.3	ug/L	1	10	9.7	1.3	7.3
2-Fluorophenol		34.4	%					
Phenol-D6		23.3	%					
Nitrobenzene-d5		72.1	%					
2-Fluorobiphenyl		73.9	%					
2,4,6-tribromophenol		73.1	%					
Terphenyl-d14		68.2	%					

600 Technology Way
P.O. Box 540, Scarborough, ME 04070
Tel:(207) 874-2400 Fax:(207) 775-4029

http://www.katahdinlab.com

Katahdin
ANALYTICAL SERVICES

Cert No E87604

Report of Analytical Results

Client: Tetra Tech NUS, Inc.
Lab ID: SD3717-4
Client ID: DA-MW101B-062310
Project: CTO WE19 NS Newport, SW
SDG: WE19-1

Sample Date: 23-JUN-10
Received Date: 25-JUN-10
Extract Date: 29-JUN-10
Extracted By: EKC
Extraction Method:
Lab Prep Batch: WG79124

Analysis Date: 29-JUN-10
Analyst: EKC
Analysis Method: RSK SOP 175
Matrix: AQ
% Solids: NA
Report Date: 13-JUL-10

Compound	Qualifier	Result	Units	Dilution	LOQ	ADJ LOQ	ADJ MDL	ADJ LOD
Methane		400	ug/L	1	10	10.	0.68	2.0
Ethane	U	2.0	ug/L	1	10	10.	0.58	2.0
Ethene	U	2.0	ug/L	1	10	10.	0.69	2.0

600 Technology Way
P.O. Box 540, Scarborough, ME 04070
Tel:(207) 874-2400 Fax:(207) 775-4029

http://www.katahdinlab.com

Katahdin
ANALYTICAL SERVICES

Cert No E87604

Report of Analytical Results

Client: Tetra Tech NUS, Inc.
Lab ID: SD3717-3
Client ID: DA-MW7A-062310
Project: CTO WE19 NS Newport, SW
SDG: WE19-1

Sample Date: 23-JUN-10
Received Date: 25-JUN-10
Extract Date: 29-JUN-10
Extracted By: EKC
Extraction Method:
Lab Prep Batch: WG79124

Analysis Date: 29-JUN-10
Analyst: EKC
Analysis Method: RSK SOP 175
Matrix: AQ
% Solids: NA
Report Date: 13-JUL-10

Compound	Qualifier	Result	Units	Dilution	LOQ	ADJ LOQ	ADJ MDL	ADJ LOD
Methane		160	ug/L	1	10	10.	0.68	2.0
Ethane	U	2.0	ug/L	1	10	10.	0.58	2.0
Ethene	U	2.0	ug/L	1	10	10.	0.69	2.0

600 Technology Way
P.O. Box 540, Scarborough, ME 04070
Tel:(207) 874-2400 Fax:(207) 775-4029

http://www.katahdinlab.com

Report of Analytical Results

Client: Tetra Tech NUS, Inc.
Lab ID: SD3639-2
Client ID: DA-MW7B-062210
Project: CTO WE19 NS Newport, SW
SDG: WE19-1

Sample Date: 22-JUN-10
Received Date: 23-JUN-10
Extract Date: 29-JUN-10
Extracted By: EKC
Extraction Method:
Lab Prep Batch: WG79124

Analysis Date: 29-JUN-10
Analyst: EKC
Analysis Method: RSK SOP 175
Matrix: AQ
% Solids: NA
Report Date: 13-JUL-10

Compound	Qualifier	Result	Units	Dilution	LOQ	ADJ LOQ	ADJ MDL	ADJ LOD
Methane		14.	ug/L	1	10	10.	0.68	2.0
Ethane	U	2.0	ug/L	1	10	10.	0.58	2.0
Ethene	U	2.0	ug/L	1	10	10.	0.69	2.0

600 Technology Way
P.O. Box 540, Scarborough, ME 04070
Tel:(207) 874-2400 Fax:(207) 775-4029

http://www.katahdinlab.com

Katahdin
ANALYTICAL SERVICES

Cert No E87604

Report of Analytical Results

Client: Tetra Tech NUS, Inc.
Lab ID: SD3756-7
Client ID: DA-TB04-062510
Project: CTO WE19 NS Newport, SW
SDG: WE19-1

Sample Date: 25-JUN-10
Received Date: 26-JUN-10
Extract Date: 08-JUL-10
Extracted By: HCG
Extraction Method:
Lab Prep Batch: WG79491

Analysis Date: 08-JUL-10
Analyst: HCG
Analysis Method: SW846 8260BSIM
Matrix: AQ
% Solids: NA
Report Date: 13-JUL-10

Compound	Qualifier	Result	Units	Dilution	LOQ	ADJ LOQ	ADJ MDL	ADJ LOD
1,4-Dioxane	U	1.0	ug/L	1	2	2.0	0.70	1.0
Fluorobenzene		120.	%					
1,4-Dioxane-D8		112.	%					

600 Technology Way
P.O. Box 540, Scarborough, ME 04070
Tel:(207) 874-2400 Fax:(207) 775-4029

http://www.katahdinlab.com

Report of Analytical Results

Client: Tetra Tech NUS, Inc.
Lab ID: SD3756-5
Client ID: DA-DW-15-0610
Project: CTO WE19 NS Newport, SW
SDG: WE19-1

Sample Date: 25-JUN-10
Received Date: 26-JUN-10
Extract Date: 08-JUL-10
Extracted By: HCG
Extraction Method:
Lab Prep Batch: WG79491

Analysis Date: 08-JUL-10
Analyst: HCG
Analysis Method: SW846 8260BSIM
Matrix: AQ
% Solids: NA
Report Date: 13-JUL-10

Compound	Qualifier	Result	Units	Dilution	LOQ	ADJ LOQ	ADJ MDL	ADJ LOD
1,4-Dioxane	U	1.0	ug/L	1	2	2.0	0.70	1.0
Fluorobenzene		96.0	%					
1,4-Dioxane-D8		71.5	%					

600 Technology Way
P.O. Box 540, Scarborough, ME 04070
Tel:(207) 874-2400 Fax:(207) 775-4029

http://www.katahdinlab.com

Katahdin
ANALYTICAL SERVICES

Cert No E87604

Report of Analytical Results

Client: Tetra Tech NUS, Inc.
Lab ID: SD3756-6
Client ID: DA-DW-16-0610
Project: CTO WE19 NS Newport, SW
SDG: WE19-1

Sample Date: 25-JUN-10
Received Date: 26-JUN-10
Extract Date: 08-JUL-10
Extracted By: HCG
Extraction Method:
Lab Prep Batch: WG79491

Analysis Date: 08-JUL-10
Analyst: HCG
Analysis Method: SW846 8260BSIM
Matrix: AQ
% Solids: NA
Report Date: 13-JUL-10

Compound	Qualifier	Result	Units	Dilution	LOQ	ADJ LOQ	ADJ MDL	ADJ LOD
1,4-Dioxane	U	1.0	ug/L	1	2	2.0	0.70	1.0
Fluorobenzene		100.	%					
1,4-Dioxane-D8		73.5	%					

600 Technology Way
P.O. Box 540, Scarborough, ME 04070
Tel:(207) 874-2400 Fax:(207) 775-4029

http://www.katahdinlab.com

Katahdin
ANALYTICAL SERVICES

Cert No E87604

Report of Analytical Results

Client: Tetra Tech NUS, Inc.
Lab ID: SD3717-4
Client ID: DA-MW101B-062310
Project: CTO WE19 NS Newport, SW
SDG: WE19-1

Sample Date: 23-JUN-10
Received Date: 25-JUN-10
Extract Date: 28-JUN-10
Extracted By: WS
Extraction Method: SW846 3510
Lab Prep Batch: WG79083

Analysis Date: 29-JUN-10
Analyst: JCG
Analysis Method: SW846 M8270C
Matrix: AQ
% Solids: NA
Report Date: 02-JUL-10

Compound	Qualifier	Result	Units	Dilution	LOQ	ADJ LOQ	ADJ MDL	ADJ LOD
1,4-Dioxane		4.0	ug/L	1	1	0.94	0.027	0.47
2-Methylnaphthalene-D10		70.4	%					

600 Technology Way
P.O. Box 540, Scarborough, ME 04070
Tel:(207) 874-2400 Fax:(207) 775-4029

http://www.katahdinlab.com

Report of Analytical Results

Client: Tetra Tech NUS, Inc.
Lab ID: SD3583-2
Client ID: DA-MW104B-061810
Project: CTO WE19 NS Newport, SW
SDG: WE19-1

Sample Date: 18-JUN-10
Received Date: 19-JUN-10
Extract Date: 23-JUN-10
Extracted By: WS
Extraction Method: SW846 3520
Lab Prep Batch: WG78940

Analysis Date: 25-JUN-10
Analyst: JCG
Analysis Method: SW846 M8270C
Matrix: AQ
% Solids: NA
Report Date: 02-JUL-10

Compound	Qualifier	Result	Units	Dilution	LOQ	ADJ LOQ	ADJ MDL	ADJ LOD
1,4-Dioxane		2.4	ug/L	1	1	1.0	0.029	0.50
2-Methylnaphthalene-D10		75.9	%					

600 Technology Way
P.O. Box 540, Scarborough, ME 04070
Tel:(207) 874-2400 Fax:(207) 775-4029

http://www.katahdinlab.com

Report of Analytical Results

Client: Tetra Tech NUS, Inc.
Lab ID: SD3717-3
Client ID: DA-MW7A-062310
Project: CTO WE19 NS Newport, SW
SDG: WE19-1

Sample Date: 23-JUN-10
Received Date: 25-JUN-10
Extract Date: 28-JUN-10
Extracted By: WS
Extraction Method: SW846 3510
Lab Prep Batch: WG79083

Analysis Date: 29-JUN-10
Analyst: JCG
Analysis Method: SW846 M8270C
Matrix: AQ
% Solids: NA
Report Date: 02-JUL-10

Compound	Qualifier	Result	Units	Dilution	LOQ	ADJ LOQ	ADJ MDL	ADJ LOD
1,4-Dioxane	U	0.47	ug/L	1	1	0.94	0.027	0.47
2-Methylnaphthalene-D10		60.3	%					

600 Technology Way
P.O. Box 540, Scarborough, ME 04070
Tel:(207) 874-2400 Fax:(207) 775-4029

http://www.katahdinlab.com

Katahdin
ANALYTICAL SERVICES

Cert No E87604

Report of Analytical Results

Client: Tetra Tech NUS, Inc.
Lab ID: SD3639-2
Client ID: DA-MW7B-062210
Project: CTO WE19 NS Newport, SW
SDG: WE19-1

Sample Date: 22-JUN-10
Received Date: 23-JUN-10
Extract Date: 24-JUN-10
Extracted By: GN
Extraction Method: SW846 3510
Lab Prep Batch: WG78955

Analysis Date: 25-JUN-10
Analyst: JCG
Analysis Method: SW846 M8270C
Matrix: AQ
% Solids: NA
Report Date: 02-JUL-10

Compound	Qualifier	Result	Units	Dilution	LOQ	ADJ LOQ	ADJ MDL	ADJ LOD
1,4-Dioxane	J	0.054	ug/L	1	1	0.95	0.028	0.48
2-Methylnaphthalene-D10		60.4	%					

600 Technology Way
P.O. Box 540, Scarborough, ME 04070
Tel:(207) 874-2400 Fax:(207) 775-4029

http://www.katahdinlab.com

Report of Analytical Results

Client: Tetra Tech NUS, Inc.
Lab ID: SD3756-1
Client ID: DA-SW-B179-01-0610
Project: CTO WE19 NS Newport, SW
SDG: WE19-1

Sample Date: 25-JUN-10
Received Date: 26-JUN-10
Extract Date: 29-JUN-10
Extracted By: WS
Extraction Method: SW846 3510
Lab Prep Batch: WG79113

Analysis Date: 29-JUN-10
Analyst: JCG
Analysis Method: SW846 M8270C
Matrix: AQ
% Solids: NA
Report Date: 02-JUL-10

Compound	Qualifier	Result	Units	Dilution	LOQ	ADJ LOQ	ADJ MDL	ADJ LOD
1,4-Dioxane	U	0.48	ug/L	1	1	0.96	0.028	0.48
2-Methylnaphthalene-D10		69.8	%					

600 Technology Way
P.O. Box 540, Scarborough, ME 04070
Tel:(207) 874-2400 Fax:(207) 775-4029

http://www.katahdinlab.com

Report of Analytical Results

Client: Tetra Tech NUS, Inc.
Lab ID: SD3756-2
Client ID: DA-SW-B179-02-0610
Project: CTO WE19 NS Newport, SW
SDG: WE19-1

Sample Date: 25-JUN-10
Received Date: 26-JUN-10
Extract Date: 29-JUN-10
Extracted By: WS
Extraction Method: SW846 3510
Lab Prep Batch: WG79113

Analysis Date: 29-JUN-10
Analyst: JCG
Analysis Method: SW846 M8270C
Matrix: AQ
% Solids: NA
Report Date: 02-JUL-10

Compound	Qualifier	Result	Units	Dilution	LOQ	ADJ LOQ	ADJ MDL	ADJ LOD
1,4-Dioxane	U	0.51	ug/L	1	1	1.0	0.030	0.51
2-Methylnaphthalene-D10		74.7	%					

600 Technology Way
P.O. Box 540, Scarborough, ME 04070
Tel:(207) 874-2400 Fax:(207) 775-4029

http://www.katahdinlab.com

Report of Analytical Results

Client: Tetra Tech NUS, Inc.
Lab ID: SD3756-3
Client ID: DA-SW-B179-04-0610
Project: CTO WE19 NS Newport, SW
SDG: WE19-1

Sample Date: 25-JUN-10
Received Date: 26-JUN-10
Extract Date: 29-JUN-10
Extracted By: WS
Extraction Method: SW846 3510
Lab Prep Batch: WG79113

Analysis Date: 29-JUN-10
Analyst: JCG
Analysis Method: SW846 M8270C
Matrix: AQ
% Solids: NA
Report Date: 02-JUL-10

Compound	Qualifier	Result	Units	Dilution	LOQ	ADJ LOQ	ADJ MDL	ADJ LOD
1,4-Dioxane	U	0.52	ug/L	1	1	1.0	0.030	0.52
2-Methylnaphthalene-D10		61.3	%					

600 Technology Way
P.O. Box 540, Scarborough, ME 04070
Tel:(207) 874-2400 Fax:(207) 775-4029

http://www.katahdinlab.com

Report of Analytical Results

Client: Tetra Tech NUS, Inc.
Lab ID: SD3756-4
Client ID: DA-SW-DUP01-062510
Project: CTO WE19 NS Newport, SW
SDG: WE19-1

Sample Date: 25-JUN-10
Received Date: 26-JUN-10
Extract Date: 29-JUN-10
Extracted By: WS
Extraction Method: SW846 3510
Lab Prep Batch: WG79113

Analysis Date: 29-JUN-10
Analyst: JCG
Analysis Method: SW846 M8270C
Matrix: AQ
% Solids: NA
Report Date: 02-JUL-10

Compound	Qualifier	Result	Units	Dilution	LOQ	ADJ LOQ	ADJ MDL	ADJ LOD
1,4-Dioxane	U	0.48	ug/L	1	1	0.97	0.028	0.48
2-Methylnaphthalene-D10		62.8	%					

600 Technology Way
P.O. Box 540, Scarborough, ME 04070
Tel:(207) 874-2400 Fax:(207) 775-4029

http://www.katahdinlab.com

Katahdin
ANALYTICAL SERVICES

Cert No E87604

Report of Analytical Results

Client: Lucy Guzman
Tetra Tech NUS
55 Jonspin Road
Wilmington,MA 01887-1020

Lab Sample ID: SD3717-4
Report Date: 13-JUL-10
Client PO: 1045366, 112G02124,
Project: CTO WE19 NS Newport,
SDG: WE19-1

Sample Description	Matrix	Date Sampled	Date Received
DA-MW101B-062310	AQ	23-JUN-10	25-JUN-10

Parameter	Result	Adj LOQ	Adj LOD	Anal. Method	QC.Batch	Anal. Date	Prep. Method	Prep. Date	Footnotes
Nitrate as N	U0.025 mg/L	.05	.025	EPA 300.0	WG79097	25-JUN-10 10:32:00	N/A	N/A	
Nitrite as N	U0.025 mg/L	.05	.025	EPA 300.0	WG79097	25-JUN-10 10:32:00	N/A	N/A	
Nitrogen-Ammonia As N	U0.050 mg/L	.1	.05	EPA 350.1	WG79101	28-JUN-10 11:23:33	N/A	N/A	
Ortho-Phosphate	U0.050 mg/L	.1	.05	EPA 300.0	WG79097	25-JUN-10 10:32:00	N/A	N/A	
Sulfate	14. mg/L	1	.5	EPA 300.0	WG79097	25-JUN-10 10:32:00	N/A	N/A	
Sulfide-Iodometric	2.2 mg/L	1	.8	SM4500S E	WG79272	29-JUN-10 08:30:00	N/A	N/A	
Total Cyanide	U5.0 ug/L	10	5	SW846 M9012A	WG79194	30-JUN-10 14:42:05	SW846 M9012	30-JUN-10	
Total Organic Carbon	1.1 mg/L	1	.5	EPA 415.1	WG79524	07-JUL-10 20:15:25	N/A	N/A	

Katahdin
ANALYTICAL SERVICES

Cert No E87604

Report of Analytical Results

Client: Lucy Guzman
Tetra Tech NUS
55 Jonspin Road
Wilmington,MA 01887-1020

Lab Sample ID: SD3717-3
Report Date: 13-JUL-10
Client PO: 1045366, 112G02124,
Project: CTO WE19 NS Newport,
SDG: WE19-1

Sample Description	Matrix	Date Sampled	Date Received
DA-MW7A-062310	AQ	23-JUN-10	25-JUN-10

Parameter	Result	Adj LOQ	Adj LOD	Anal. Method	QC.Batch	Anal. Date	Prep. Method	Prep. Date	Footnotes
Nitrate as N	U0.025 mg/L	.05	.025	EPA 300.0	WG79097	25-JUN-10 10:43:00	N/A	N/A	
Nitrite as N	U0.025 mg/L	.05	.025	EPA 300.0	WG79097	25-JUN-10 10:43:00	N/A	N/A	
Nitrogen-Ammonia As N	2.4 mg/L	.2	.1	EPA 350.1	WG79101	28-JUN-10 11:32:30	N/A	N/A	
Ortho-Phosphate	U0.050 mg/L	.1	.05	EPA 300.0	WG79097	25-JUN-10 10:43:00	N/A	N/A	
Sulfate	9.0 mg/L	1	.5	EPA 300.0	WG79097	25-JUN-10 10:43:00	N/A	N/A	
Sulfide-Iodometric	1.0 mg/L	1	.8	SM4500S E	WG79272	29-JUN-10 08:30:00	N/A	N/A	
Total Cyanide	U5.0 ug/L	10	5	SW846 M9012A	WG79194	30-JUN-10 14:42:04	SW846 M9012	30-JUN-10	
Total Organic Carbon	10. mg/L	1	.5	EPA 415.1	WG79524	07-JUL-10 20:02:49	N/A	N/A	

Report of Analytical Results

Client: Lucy Guzman
Tetra Tech NUS
55 Jonspin Road
Wilmington,MA 01887-1020

Lab Sample ID: SD3639-2
Report Date: 13-JUL-10
Client PO: 1045366, 112G02124,
Project: CTO WE19 NS Newport,
SDG: WE19-1

Sample Description	Matrix	Date Sampled	Date Received
DA-MW7B-062210	AQ	22-JUN-10	23-JUN-10

Parameter	Result	Adj LOQ	Adj LOD	Anal. Method	QC.Batch	Anal. Date	Prep. Method	Prep. Date	Footnotes
Nitrate as N	J0.020 mg/L	.05	.025	EPA 300.0	WG79095	23-JUN-10 13:46:00	N/A	N/A	
Nitrite as N	U0.025 mg/L	.05	.025	EPA 300.0	WG79095	23-JUN-10 13:46:00	N/A	N/A	
Nitrogen-Ammonia As N	U0.050 mg/L	.1	.05	EPA 350.1	WG79101	28-JUN-10 11:16:55	N/A	N/A	
Ortho-Phosphate	U0.050 mg/L	.1	.05	EPA 300.0	WG79095	23-JUN-10 13:46:00	N/A	N/A	
Sulfate	5.4 mg/L	1	.5	EPA 300.0	WG79095	23-JUN-10 13:46:00	N/A	N/A	
Sulfide-Iodometric	U0.80 mg/L	1	.8	SM4500S E	WG79266	25-JUN-10 15:42:00	N/A	N/A	
Total Cyanide	U5.0 ug/L	10	5	SW846 M9012A	WG79001	24-JUN-10 15:08:02	SW846 M9012	24-JUN-10	
Total Organic Carbon	1.8 mg/L	1	.5	EPA 415.1	WG79524	07-JUL-10 19:50:09	N/A	N/A	

Tetra Tech NUS **INTERNAL CORRESPONDENCE**

TO:	**J. FORRELLI**	**DATE:**	**August 20, 2010**
FROM:	**MEGAN CARSON**	**COPIES:**	**DV FILE**

SUBJECT: **ORGANIC DATA VALIDATION- VOC, SVOC, AND PAH**
CTO WE19, NAVSTA NEWPORT
SAMPLE DELIVERY GROUP (SDG) WE19-2

SAMPLES: 4/Sediment/

DA-SD-B179-01-0006	DA-SD-B179-02-0006
DA-SD-B179-04-0006	DA-SD-DUP01-062510

2/Aqueous/

DA-SD-RB01-070110	DA-TB04-062510

OVERVIEW

The sample set for CTO WE19, NAVSTA Newport, SDG WE19-2, consists of four (4) sediment environmental samples, one (1) rinsate blank, and one (1) trip blank. This SDG contained one field duplicate pair: DA-SD-B179-01-0006/DA-SD-DUP01-062510.

Samples DA-SD-B179-02-0006, DA-SD-B179-04-0006, DA-SD-RB01-070110, and DA-TB04-062510 were analyzed for volatile organic compounds (VOC). Samples DA-SD-B179-01-0006, DA-SD-B179-02-0006, DA-SD-B179-04-0006, DA-SD-DUP01-062510, and DA-SD-RB01-070110 were analyzed for semivolatile organic compounds (SVOC) and polycyclic aromatic hydrocarbons (PAH).

The samples were collected by Tetra Tech NUS on June 25th and July 1st , 2010 and analyzed by Katahdin Analytical Services. VOC analyses were conducted by SW846 method 8260. SVOC analyses were conducted by SW846 method 8270. PAH analyses were conducted by SW846 method 8270SIM. A Tier 2 data validation was performed on all analyses. The data contained in this SDG were validated with regard to the following parameters:

*	• Data Completeness
*	• Holding Times
*	• GC/MS Tuning
	• Initial/Continuing Calibrations
	• Laboratory Method/Field Blank Results
*	• Surrogate Recoveries
	• Laboratory Control Spike/Laboratory Control Spike Duplicate Results
*	• Matrix Spike/Matrix Spike Duplicate Results
*	• Internal Standards
	• Field Duplicate Precision
*	• Compound Quantitation
*	• Compound Identification
*	• Detection Limits

The asterisk (*) indicates that all quality control criteria were met for this parameter. Qualified (if applicable) analytical results are summarized in Appendix A. Results as reported by the laboratory are presented in Appendix B. Appendix C contains Region I worksheets, and Appendix D contains the documentation to

TO: JFORRELLI
SDG: WE19-2
DATE: 8/20/2010

support the findings as discussed in this data validation report. The attached Table summarizes the validation qualifications which are based on the following information:

VOC:

The following compounds were detected in the method blank at the following maximum concentrations:

Compound	Maximum Concentration	Action Level
Carbon disulfide [1]	1.4 ug/kg	7.0 ug/kg
Methylene chloride [2]	1.6 ug/L	16.0 ug/L

[1] Maximum concentration found in a method blank affecting all soil samples.
[2] Maximum concentration found in a method blank affecting sample all water samples.

Action levels of 5X and 10X (for methylene chloride and acetone) the maximum contaminant concentration for were established to evaluate blank contamination. Dilution factors and sample aliquots were taken into consideration during the application of all action levels. Positive results less than the blank action level were qualified as non-detect (U). The trip blank and rinsate blank was not qualified for blank contamination.

The initial calibration analyzed on instrument GCMS-C on 7/2/10 had a relative standard deviation >15% for acetone. All soil samples and the trip blank were affected. Positive results were qualified as estimated (J) and non-detect results were qualified as estimated (UJ).

The continuing calibration analyzed on instrument GCMS-C on 7/6/10 had a percent difference >20% for chloroethane, acetone, 2-butanone, and 2-hexanone. All soil samples and the trip blank were affected. Positive results were qualified as estimated (J) and non-detects were qualified as estimated (UJ).

The initial calibration analyzed on instrument GCMS-F on 7/9/10 had a relative standard deviation >15% for acetone and 1,2-dibromo-3-chloropropane. The rinsate blank was the only sample affected. Positive results were qualified as estimated (J) and non-detects were qualified as estimated (UJ).

SVOC:

The following compounds were detected in the method blank at the following maximum concentrations:

Compound	Maximum Concentration	Action Level
Bis(2-ethylhexyl)phthalate [1]	290 ug/kg	2900 ug/kg
Bis(2-ethylhexyl)phthalate [2]	4.0 ug/L	40 ug/L

[1] Maximum concentration found in method blanks affecting all soil samples
[2] Maximum concentration found in method blanks affecting all water samples.

Action levels of 5X the maximum contaminant concentration for were established to evaluate blank contamination. Dilution factors and sample aliquots were taken into consideration during the application of all action levels. Positive results less than the blank action level were qualified as non-detect (U). Rinsate blank results were not qualified due to method blank contamination.

Laboratory control sample WG79273-2 had a percent recovery less than the lower limit (LL) of method QC acceptance criteria for 1,2-dichlorobenzene, 2-methylphenol, 2,2-oxybis(1-chloropropane), 3&4-methylphenol, 2-nitrophenol, 2,4-dichlorophenol, 1,2,4-trichlorobenzene, 2,4,5-trichloropehnol, pentachlorophenol, 2-chloronanphthalene, and percent recoveries <10% for benzoic acid, and benzidine. All soil samples were affected. All nondetect results for benzoic acid and benzidine were qualified as rejected

(UR). All other non-detect sample results were qualified as estimated (UJ).

Laboratory control spike WG7974-2 had a 0% recovery for benzidine. Sample DA-SD-RB01-070110 was affected. The non-detect benzidine result was qualified as estimated (UJ).

The continuing calibration analyzed on instrument GCMS-U on 7/7/10 had a percent difference >20% for di-n-octylphthalate. Samples DA-SD-B179-01-0006, DA-SD-B179-02-0006, and DA-SD-B179-04-0006 were affected. Non-detect results were qualified as estimated (UJ).

The continuing calibration analyzed on instrument GCMS-U on 7/9/10 had a percent difference >20% for 2-nitroaniline. Sample DA-SD-DUP01-062510 was the only sample affected. The non-detect 2-nitroaniline result was qualified as estimated (UJ).

PAH

The field duplicate pair DA-SD-B179-01-0006/DA-SD-DUP01-062510 had a relative percent difference > 50% for 2-methylnaphthalene, acenaphthene, anthracene, benzo(a)pyrene, fluorene, naphthalene, fluoranthene, and phenanthrene. Positive results for DA-SD-B179-01-0006 and DA-SD-DUP01-062510 were qualified as estimated (J) .

ADDITIONAL COMMENTS

Positive results greater than the MDL but less than the LOQ were qualified as estimated (J).

SVOC laboratory control spike were not spiked with n-nitrosopyrrolidine.

The initial calibration analyzed on instrument GCMS-U on 6/28/10 had a relative standard deviation greater than 15% for benzoic acid. All soil samples were affected. No validation action was taken as sample results were already qualified as rejected (UR).

Laboratory control spike WG79373-2 had a percent recovery greater than the upper limit (UL) of method QC acceptance criteria for pyrene. Sample DA-SD-RB01-070110 was the only sample affected. No validation action was warranted as sample results were non-detect.

The following samples were analyzed at dilutions to bring target compounds into linear calibration range:

Sample ID	Dilution Factor	Compound
DA-SD-B179-01-0006	4X	benzo(a)anthrancene, benzo(b)fluotanthene, chrysene, fluoranthene, phenanthrene, pyrene
DA-SD-B179-02-0006	4X	fluoranthene, pyrene
DA-SD-DUP01-062510	7X	benxo(a)anthracene, benzo(a)pyrene, benzo(b)fluoranthene, chrysene, fluoranthene, phenanthrene, pyrene

EXECUTIVE SUMMARY

Laboratory Performance Issues: Several initial and continuing calibration non-compliances resulted in the qualification of VOC and SVOC data. VOC and SVOC blank contamination resulted in the qualification of data. Several VOC and SVOC laboratory control spike non-compliances resulted in the qualification of data.

Other Factors Affecting Data Quality: None.

TO: JFORRELLI
SDG: WE19-2
DATE: 8/20/2010

The data for these analyses were reviewed with reference to the Region I EPA "Data Validation Functional Guidelines - Part II" (12/96) and the Department of Defense (DoD) document entitled "Quality Systems Manual (QSM) for Environmental Laboratories" (January 2006). The text of this report has been formulated to address only those problem areas affecting data quality.

Megan Carson

Tetra Tech NUS
Megan Carson
Chemist 1/ Data Validator

Edward Sadlowski for

TetraTech NUS
Joseph A. Samchuck
Data Validation Quality Assurance Officer

Attachments:

Appendix A – Qualified Analytical Results
Appendix B – Results as Reported by the Laboratory
Appendix C – Regional Worksheets
Appendix D – Support Documentation

APPENDIX A

QUALIFIED ANALYTICAL RESULTS

PROJ_NO: 02124	NSAMPLE	DA-SD-B179-02-0006			DA-SD-B179-04-0006		
SDG: WE19-2	LAB_ID	SD3757-3			SD3757-5		
FRACTION: OV	SAMP_DATE	6/25/2010			6/25/2010		
MEDIA: SEDIMENT	QC_TYPE	NM			NM		
	UNITS	UG/KG			UG/KG		
	PCT_SOLIDS	61.6			82.6		
	DUP_OF						
PARAMETER		RESULT	VQL	QLCD	RESULT	VQL	QLCD
1,1,1,2-TETRACHLOROETHANE		3	U		2.2	U	
1,1,1-TRICHLOROETHANE		3	U		1.6	J	P
1,1,2,2-TETRACHLOROETHANE		3	U		2.2	U	
1,1,2-TRICHLOROETHANE		3	U		2.2	U	
1,1-DICHLOROETHANE		3	U		3.7	J	P
1,1-DICHLOROETHENE		3	U		2.2	U	
1,1-DICHLOROPROPENE		3	U		2.2	U	
1,2,3-TRICHLOROBENZENE		3	U		2.2	U	
1,2,3-TRICHLOROPROPANE		3	U		2.2	U	
1,2,4-TRICHLOROBENZENE		3	U		2.2	U	
1,2,4-TRIMETHYLBENZENE		3	U		2.2	U	
1,2-DIBROMO-3-CHLOROPROPANE		3	U		2.2	U	
1,2-DIBROMOETHANE		3	U		2.2	U	
1,2-DICHLOROBENZENE		3	U		2.2	U	
1,2-DICHLOROETHANE		3	U		2.2	U	
1,2-DICHLOROPROPANE		3	U		2.2	U	
1,3,5-TRIMETHYLBENZENE		3	U		2.2	U	
1,3-DICHLOROBENZENE		3	U		2.2	U	
1,3-DICHLOROPROPANE		3	U		2.2	U	
1,4-DICHLOROBENZENE		3	U		2.2	U	
2,2-DICHLOROPROPANE		3	U		2.2	U	
2-BUTANONE		15	UJ	C	11	UJ	C
2-CHLOROTOLUENE		3	U		2.2	U	
2-HEXANONE		15	UJ	C	11	UJ	C
4-CHLOROTOLUENE		3	U		2.2	U	
4-ISOPROPYLTOLUENE		3	U		2.2	U	
4-METHYL-2-PENTANONE		15	U		11	U	
ACETONE		27	J	CP	11	UJ	C
BENZENE		3	U		2.2	U	
BROMOBENZENE		3	U		2.2	U	
BROMOCHLOROMETHANE		3	U		2.2	U	
BROMODICHLOROMETHANE		3	U		2.2	U	
BROMOFORM		3	U		2.2	U	
BROMOMETHANE		6	U		4.4	U	
CARBON DISULFIDE		2.1	U	A	1.3	U	A
CARBON TETRACHLORIDE		3	U		2.2	U	

PROJ_NO: 02124	NSAMPLE	DA-SD-B179-02-0006			DA-SD-B179-04-0006		
SDG: WE19-2	LAB_ID	SD3757-3			SD3757-5		
FRACTION: OV	SAMP_DATE	6/25/2010			6/25/2010		
MEDIA: SEDIMENT	QC_TYPE	NM			NM		
	UNITS	UG/KG			UG/KG		
	PCT_SOLIDS	61.6			82.6		
	DUP_OF						
PARAMETER		RESULT	VQL	QLCD	RESULT	VQL	QLCD
CHLOROBENZENE		3	U		2.2	U	
CHLORODIBROMOMETHANE		3	U		2.2	U	
CHLOROETHANE		6	UJ	C	4.4	UJ	C
CHLOROFORM		3	U		2.2	U	
CHLOROMETHANE		6	U		4.4	U	
CIS-1,2-DICHLOROETHENE		3	U		2.2	U	
CIS-1,3-DICHLOROPROPENE		3	U		2.2	U	
DIBROMOMETHANE		3	U		2.2	U	
DICHLORODIFLUOROMETHANE		6	U		4.4	U	
ETHYLBENZENE		3	U		2.2	U	
HEXACHLOROBUTADIENE		3	U		2.2	U	
ISOPROPYLBENZENE		3	U		2.2	U	
M+P-XYLENES		6	U		4.4	U	
METHYL TERT-BUTYL ETHER		3	U		2.2	U	
METHYLENE CHLORIDE		15	U		11	U	
N-BUTYLBENZENE		3	U		2.2	U	
N-PROPYLBENZENE		3	U		2.2	U	
O-XYLENE		3	U		2.2	U	
SEC-BUTYLBENZENE		3	U		2.2	U	
STYRENE		3	U		2.2	U	
TERT-BUTYLBENZENE		3	U		2.2	U	
TETRACHLOROETHENE		3	U		2.2	U	
TOLUENE		3	U		2.2	U	
TRANS-1,2-DICHLOROETHENE		3	U		2.2	U	
TRANS-1,3-DICHLOROPROPENE		3	U		2.2	U	
TRICHLOROETHENE		3	U		2.2	U	
TRICHLOROFLUOROMETHANE		6	U		4.4	U	
VINYL CHLORIDE		6	U		4.4	U	

PROJ_NO: 02124	NSAMPLE	DA-SD-RB01-070110			DA-TB04-062510		
SDG: WE19-2	LAB_ID	SD3902-1			SD3757-8		
FRACTION: OV	SAMP_DATE	7/1/2010			6/25/2010		
MEDIA: WATER	QC_TYPE	NM			NM		
	UNITS	UG/L			UG/L		
	PCT_SOLIDS	0.0			0.0		
	DUP_OF						
PARAMETER		RESULT	VQL	QLCD	RESULT	VQL	QLCD
1,1,1,2-TETRACHLOROETHANE		0.5	U		2.5	U	
1,1,1-TRICHLOROETHANE		0.5	U		2.5	U	
1,1,2,2-TETRACHLOROETHANE		0.5	U		2.5	U	
1,1,2-TRICHLOROETHANE		0.5	U		2.5	U	
1,1-DICHLOROETHANE		0.5	U		2.5	U	
1,1-DICHLOROETHENE		0.5	U		2.5	U	
1,1-DICHLOROPROPENE		0.5	U		2.5	U	
1,2,3-TRICHLOROBENZENE		0.5	U		2.5	U	
1,2,3-TRICHLOROPROPANE		0.5	U		2.5	U	
1,2,4-TRICHLOROBENZENE		0.5	U		2.5	U	
1,2,4-TRIMETHYLBENZENE		0.5	U		2.5	U	
1,2-DIBROMO-3-CHLOROPROPANE		0.5	UJ	C	2.5	U	
1,2-DIBROMOETHANE		0.5	U		2.5	U	
1,2-DICHLOROBENZENE		0.5	U		2.5	U	
1,2-DICHLOROETHANE		0.5	U		2.5	U	
1,2-DICHLOROPROPANE		0.5	U		2.5	U	
1,3,5-TRIMETHYLBENZENE		0.5	U		2.5	U	
1,3-DICHLOROBENZENE		0.5	U		2.5	U	
1,3-DICHLOROPROPANE		0.5	U		2.5	U	
1,4-DICHLOROBENZENE		0.5	U		2.5	U	
2,2-DICHLOROPROPANE		0.5	U		2.5	U	
2-BUTANONE		2.2	J	P	12	UJ	C
2-CHLOROTOLUENE		0.5	U		2.5	U	
2-HEXANONE		2.5	U		12	UJ	C
4-CHLOROTOLUENE		0.5	U		2.5	U	
4-ISOPROPYLTOLUENE		0.5	U		2.5	U	
4-METHYL-2-PENTANONE		2.5	U		12	U	
ACETONE		35	J	C	12	UJ	C
BENZENE		0.5	U		2.5	U	
BROMOBENZENE		0.5	U		2.5	U	
BROMOCHLOROMETHANE		0.5	U		2.5	U	
BROMODICHLOROMETHANE		0.5	U		2.5	U	
BROMOFORM		0.5	U		2.5	U	
BROMOMETHANE		1	U		5	U	
CARBON DISULFIDE		0.5	U		1.7	U	A
CARBON TETRACHLORIDE		0.5	U		2.5	U	

PROJ_NO: 02124	NSAMPLE	DA-SD-RB01-070110			DA-TB04-062510		
SDG: WE19-2	LAB_ID	SD3902-1			SD3757-8		
FRACTION: OV	SAMP_DATE	7/1/2010			6/25/2010		
MEDIA: WATER	QC_TYPE	NM			NM		
	UNITS	UG/L			UG/L		
	PCT_SOLIDS	0.0			0.0		
	DUP_OF						
PARAMETER		RESULT	VQL	QLCD	RESULT	VQL	QLCD
CHLOROBENZENE		0.5	U		2.5	U	
CHLORODIBROMOMETHANE		0.5	U		2.5	U	
CHLOROETHANE		1	U		5	UJ	C
CHLOROFORM		0.36	J	P	2.5	U	
CHLOROMETHANE		1	U		5	U	
CIS-1,2-DICHLOROETHENE		0.5	U		2.5	U	
CIS-1,3-DICHLOROPROPENE		0.5	U		2.5	U	
DIBROMOMETHANE		0.5	U		2.5	U	
DICHLORODIFLUOROMETHANE		1	U		5	U	
ETHYLBENZENE		0.5	U		2.5	U	
HEXACHLOROBUTADIENE		0.5	U		2.5	U	
ISOPROPYLBENZENE		0.5	U		2.5	U	
M+P-XYLENES		1	U		5	U	
METHYL TERT-BUTYL ETHER		0.5	U		2.5	U	
METHYLENE CHLORIDE		2.5	U		12	U	
N-BUTYLBENZENE		0.5	U		2.5	U	
N-PROPYLBENZENE		0.5	U		2.5	U	
O-XYLENE		0.5	U		2.5	U	
SEC-BUTYLBENZENE		0.5	U		2.5	U	
STYRENE		0.5	U		2.5	U	
TERT-BUTYLBENZENE		0.5	U		2.5	U	
TETRACHLOROETHENE		0.5	U		2.5	U	
TOLUENE		0.5	U		2.5	U	
TRANS-1,2-DICHLOROETHENE		0.5	U		2.5	U	
TRANS-1,3-DICHLOROPROPENE		0.5	U		2.5	U	
TRICHLOROETHENE		0.5	U		2.5	U	
TRICHLOROFLUOROMETHANE		1	U		5	U	
VINYL CHLORIDE		1	U		5	U	

PROJ_NO: 02124	NSAMPLE	DA-SD-B179-01-0006			DA-SD-B179-02-0006			DA-SD-B179-04-0006			DA-SD-DUP01-062510		
SDG: WE19-2	LAB_ID	SD3757-1			SD3757-2			SD3757-4			SD3757-6		
FRACTION: OS	SAMP_DATE	6/25/2010			6/25/2010			6/25/2010			6/25/2010		
MEDIA: SEDIMENT	QC_TYPE	NM			NM			NM			NM		
	UNITS	UG/KG			UG/KG			UG/KG			UG/KG		
	PCT_SOLIDS	56.0			61.0			81.0			58.9		
	DUP_OF										DA-SD-B179-01-0006		
PARAMETER	RESULT	VQL	QLCD	RESULT	VQL	QLCD	RESULT	VQL	QLCD	RESULT	VQL	QLCD	
1,1-BIPHENYL	420	U		380	U		290	U		420	U		
1,2,4-TRICHLOROBENZENE	420	UJ	E	380	UJ	E	290	UJ	E	420	UJ	E	
1,2-DICHLOROBENZENE	420	UJ	E	380	UJ	E	290	UJ	E	420	UJ	E	
1,2-DIPHENYLHYDRAZINE	840	U		770	U		580	U		830	U		
1,3-DICHLOROBENZENE	420	U		380	U		290	U		420	U		
1,4-DICHLOROBENZENE	420	U		380	U		290	U		420	U		
2,2'-OXYBIS(1-CHLOROPROPANE)	420	UJ	E	380	UJ	E	290	UJ	E	420	UJ	E	
2,4,5-TRICHLOROPHENOL	1000	UJ	E	950	UJ	E	720	UJ	E	1000	UJ	E	
2,4,6-TRICHLOROPHENOL	420	U		380	U		290	U		420	U		
2,4-DICHLOROPHENOL	420	UJ	E	380	UJ	E	290	UJ	E	420	UJ	E	
2,4-DIMETHYLPHENOL	420	U		380	U		290	U		420	U		
2,4-DINITROPHENOL	1000	U		950	U		720	U		1000	U		
2,4-DINITROTOLUENE	420	U		380	U		290	U		420	U		
2,6-DICHLOROPHENOL	420	U		380	U		290	U		420	U		
2,6-DINITROTOLUENE	420	U		380	U		290	U		420	U		
2-CHLORONAPHTHALENE	420	UJ	E	380	UJ	E	290	UJ	E	420	UJ	E	
2-CHLOROPHENOL	420	U		380	U		290	U		420	U		
2-METHYLPHENOL	420	UJ	E	380	UJ	E	290	UJ	E	420	UJ	E	
2-NITROANILINE	1000	U		950	U		720	U		1000	UJ	C	
2-NITROPHENOL	420	UJ	E	380	UJ	E	290	UJ	E	420	UJ	E	
3&4-METHYLPHENOL	420	UJ	E	380	UJ	E	290	UJ	E	420	UJ	E	
3,3'-DICHLOROBENZIDINE	420	U		380	U		290	U		420	U		
3-NITROANILINE	1000	U		950	U		720	U		1000	U		
4,6-DINITRO-2-METHYLPHENOL	1000	U		950	U		720	U		1000	U		
4-BROMOPHENYL PHENYL ETHER	420	U		380	U		290	U		420	U		
4-CHLORO-3-METHYLPHENOL	420	U		380	U		290	U		420	U		
4-CHLOROANILINE	420	U		380	U		290	U		420	U		
4-CHLOROPHENYL PHENYL ETHER	420	U		380	U		290	U		420	U		
4-NITROANILINE	1000	U		950	U		720	U		1000	U		
4-NITROPHENOL	1000	U		950	U		720	U		1000	U		
BENZIDINE	1900	UR	E	1700	UR	E	1300	UR	E	1900	UR	E	
BENZOIC ACID	1000	UR	E	950	UR	E	720	UR	E	1000	UR	E	
BENZYL ALCOHOL	840	U		770	U		580	U		830	U		
BIS(2-CHLOROETHOXY)METHANE	420	U		380	U		290	U		420	U		
BIS(2-CHLOROETHYL)ETHER	420	U		380	U		290	U		420	U		
BIS(2-ETHYLHEXYL)PHTHALATE	420	U	A	230	U	A	290	U		170	U	A	

PROJ_NO: 02124 SDG: WE19-2 FRACTION: OS MEDIA: SEDIMENT	NSAMPLE	DA-SD-B179-01-0006			DA-SD-B179-02-0006			DA-SD-B179-04-0006			DA-SD-DUP01-062510		
	LAB_ID	SD3757-1			SD3757-2			SD3757-4			SD3757-6		
	SAMP_DATE	6/25/2010			6/25/2010			6/25/2010			6/25/2010		
	QC_TYPE	NM			NM			NM			NM		
	UNITS	UG/KG			UG/KG			UG/KG			UG/KG		
	PCT_SOLIDS	56.0			61.0			81.0			58.9		
	DUP_OF										DA-SD-B179-01-0006		
PARAMETER		RESULT	VQL	QLCD	RESULT	VQL	QLCD	RESULT	VQL	QLCD	RESULT	VQL	QLCD
BUTYL BENZYL PHTHALATE		420	U		380	U		290	U		420	U	
CARBAZOLE		420	U		380	U		290	U		250	J	P
DIBENZOFURAN		420	U		380	U		290	U		150	J	P
DIETHYL PHTHALATE		420	U		380	U		290	U		420	U	
DIMETHYL PHTHALATE		420	U		380	U		290	U		420	U	
DI-N-BUTYL PHTHALATE		420	U		380	U		290	U		420	U	
DI-N-OCTYL PHTHALATE		420	UJ	C	380	UJ	C	290	UJ	C	420	U	
HEXACHLOROBENZENE		420	U		380	U		290	U		420	U	
HEXACHLOROBUTADIENE		420	U		380	U		290	U		420	U	
HEXACHLOROETHANE		420	U		380	U		290	U		420	U	
ISOPHORONE		420	U		380	U		290	U		420	U	
NITROBENZENE		420	U		380	U		290	U		420	U	
N-NITROSODIMETHYLAMINE		420	U		380	U		290	U		420	U	
N-NITROSO-DI-N-PROPYLAMINE		420	U		380	U		290	U		420	U	
N-NITROSODIPHENYLAMINE		420	U		380	U		290	U		420	U	
N-NITROSOPYRROLIDINE		420	U		380	U		290	U		420	U	
PENTACHLOROPHENOL		1000	UJ	E	950	UJ	E	720	UJ	E	1000	UJ	E
PHENOL		420	U		380	U		290	U		420	U	

PROJ_NO: 02124	NSAMPLE	DA-SD-RB01-070110
SDG: WE19-2	LAB_ID	SD3902-1
FRACTION: OS	SAMP_DATE	7/1/2010
MEDIA: WATER	QC_TYPE	NM
	UNITS	UG/L
	PCT_SOLIDS	0.0
	DUP_OF	

PARAMETER	RESULT	VQL	QLCD
1,1-BIPHENYL	7.2	U	
1,2,4-TRICHLOROBENZENE	7.2	U	
1,2-DICHLOROBENZENE	7.2	U	
1,2-DIPHENYLHYDRAZINE	14	U	
1,3-DICHLOROBENZENE	7.2	U	
1,4-DICHLOROBENZENE	7.2	U	
2,2'-OXYBIS(1-CHLOROPROPANE)	7.2	U	
2,4,5-TRICHLOROPHENOL	18	U	
2,4,6-TRICHLOROPHENOL	7.2	U	
2,4-DICHLOROPHENOL	7.2	U	
2,4-DIMETHYLPHENOL	7.2	U	
2,4-DINITROPHENOL	18	U	
2,4-DINITROTOLUENE	7.2	U	
2,6-DICHLOROPHENOL	7.2	U	
2,6-DINITROTOLUENE	7.2	U	
2-CHLORONAPHTHALENE	7.2	U	
2-CHLOROPHENOL	7.2	U	
2-METHYLPHENOL	7.2	U	
2-NITROANILINE	18	U	
2-NITROPHENOL	7.2	U	
3&4-METHYLPHENOL	7.2	U	
3,3'-DICHLOROBENZIDINE	18	U	
3-NITROANILINE	18	U	
4,6-DINITRO-2-METHYLPHENOL	18	U	
4-BROMOPHENYL PHENYL ETHER	7.2	U	
4-CHLORO-3-METHYLPHENOL	7.2	U	
4-CHLOROANILINE	7.2	U	
4-CHLOROPHENYL PHENYL ETHER	7.2	U	
4-NITROANILINE	18	U	
4-NITROPHENOL	18	U	
BENZIDINE	36	UR	E
BENZOIC ACID	18	U	
BENZYL ALCOHOL	14	U	
BIS(2-CHLOROETHOXY)METHANE	7.2	U	
BIS(2-CHLOROETHYL)ETHER	7.2	U	
BIS(2-ETHYLHEXYL)PHTHALATE	3.9	U	A

PROJ_NO: 02124	NSAMPLE	DA-SD-RB01-070110
SDG: WE19-2	LAB_ID	SD3902-1
FRACTION: OS	SAMP_DATE	7/1/2010
MEDIA: WATER	QC_TYPE	NM
	UNITS	UG/L
	PCT_SOLIDS	0.0
	DUP_OF	

PARAMETER	RESULT	VQL	QLCD
BUTYL BENZYL PHTHALATE	7.2	U	
CARBAZOLE	7.2	U	
DIBENZOFURAN	7.2	U	
DIETHYL PHTHALATE	7.2	U	
DIMETHYL PHTHALATE	7.2	U	
DI-N-BUTYL PHTHALATE	7.2	U	
DI-N-OCTYL PHTHALATE	7.2	U	
HEXACHLOROBENZENE	7.2	U	
HEXACHLOROBUTADIENE	7.2	U	
HEXACHLOROETHANE	7.2	U	
ISOPHORONE	7.2	U	
NITROBENZENE	7.2	U	
N-NITROSODIMETHYLAMINE	7.2	U	
N-NITROSO-DI-N-PROPYLAMINE	7.2	U	
N-NITROSODIPHENYLAMINE	7.2	U	
N-NITROSOPYRROLIDINE	7.2	U	
PENTACHLOROPHENOL	18	U	
PHENOL	7.2	U	

PROJ_NO: 02124	NSAMPLE	DA-SD-B179-01-0006			DA-SD-B179-01-0006DL			DA-SD-B179-02-0006			DA-SD-B179-02-0006DL		
SDG: WE19-2	LAB_ID	SD3757-1			SD3757-1DL			SD3757-2			SD3757-2DL		
FRACTION: PAH	SAMP_DATE	6/25/2010			6/25/2010			6/25/2010			6/25/2010		
MEDIA: SEDIMENT	QC_TYPE	NM			NM			NM			NM		
	UNITS	UG/KG			UG/KG			UG/KG			UG/KG		
	PCT_SOLIDS	56.0			56.0			61.0			61.0		
	DUP_OF												
PARAMETER		RESULT	VQL	QLCD	RESULT	VQL	QLCD	RESULT	VQL	QLCD	RESULT	VQL	QLCD
2-METHYLNAPHTHALENE		12	J	GP				16	U				
ACENAPHTHENE		110	J	G				44					
ACENAPHTHYLENE		17	U					16	U				
ANTHRACENE		140	J	G				72					
BENZO(A)ANTHRACENE					630			250					
BENZO(A)PYRENE		420	J	G				250					
BENZO(B)FLUORANTHENE					690			400					
BENZO(G,H,I)PERYLENE		250						330					
BENZO(K)FLUORANTHENE		200						120					
CHRYSENE					560			220					
DIBENZO(A,H)ANTHRACENE		68						43					
FLUORANTHENE					1300	J	G				710		
FLUORENE		130	J	C				43					
INDENO(1,2,3-CD)PYRENE		270						230					
NAPHTHALENE		67	J	C				21	J	P			
PHENANTHRENE					950	J	G	380					
PYRENE					1200						850		

PROJ_NO: 02124	NSAMPLE	DA-SD-B179-04-0006			DA-SD-DUP01-062510			DA-SD-DUP01-062510DL		
SDG: WE19-2	LAB_ID	SD3757-4			SD3757-6			SD3757-6DL		
FRACTION: PAH	SAMP_DATE	6/25/2010			6/25/2010			6/25/2010		
MEDIA: SEDIMENT	QC_TYPE	NM			NM			NM		
	UNITS	UG/KG			UG/KG			UG/KG		
	PCT_SOLIDS	81.0			58.9			58.9		
	DUP_OF				DA-SD-B179-01-0006			DA-SD-B179-01-0006		
PARAMETER		RESULT	VQL	QLCD	RESULT	VQL	QLCD	RESULT	VQL	QLCD
2-METHYLNAPHTHALENE		12	U		35	J	G			
ACENAPHTHENE		12	J	P	200	J	G			
ACENAPHTHYLENE		12	U		17	U				
ANTHRACENE		26			280	J	G			
BENZO(A)ANTHRACENE		71						930		
BENZO(A)PYRENE		69						760	J	G
BENZO(B)FLUORANTHENE		120						1000		
BENZO(G,H,I)PERYLENE		43			350					
BENZO(K)FLUORANTHENE		47			270					
CHRYSENE		74						910		
DIBENZO(A,H)ANTHRACENE		12	J	P	95					
FLUORANTHENE		160						2300	J	G
FLUORENE		8.9	J	P	230	J	G			
INDENO(1,2,3-CD)PYRENE		60			380					
NAPHTHALENE		5.1	J	P	200	J	G			
PHENANTHRENE		98						1900	J	G
PYRENE		140						1700		

PROJ_NO: 02124	NSAMPLE	DA-SD-RB01-070110
SDG: WE19-2	LAB_ID	SD3902-1
FRACTION: PAH	SAMP_DATE	7/1/2010
MEDIA: WATER	QC_TYPE	NM
	UNITS	UG/L
	PCT_SOLIDS	0.0
	DUP_OF	

PARAMETER	RESULT	VQL	QLCD
2-METHYLNAPHTHALENE	0.096	U	
ACENAPHTHENE	0.096	U	
ACENAPHTHYLENE	0.096	U	
ANTHRACENE	0.096	U	
BENZO(A)ANTHRACENE	0.096	U	
BENZO(A)PYRENE	0.096	U	
BENZO(B)FLUORANTHENE	0.096	U	
BENZO(G,H,I)PERYLENE	0.096	U	
BENZO(K)FLUORANTHENE	0.096	U	
CHRYSENE	0.096	U	
DIBENZO(A,H)ANTHRACENE	0.096	U	
FLUORANTHENE	0.096	U	
FLUORENE	0.096	U	
INDENO(1,2,3-CD)PYRENE	0.096	U	
NAPHTHALENE	0.096	U	
PHENANTHRENE	0.096	U	
PYRENE	0.096	U	

APPENDIX B

RESULTS AS REPORTED BY THE LABORATORY

Report of Analytical Results

Client: Tetra Tech NUS, Inc.
Lab ID: SD3757-3
Client ID: DA-SD-B179-02-0006
Project: CTO WE19 NS Newport, Sed
SDG: WE19-2

Sample Date: 25-JUN-10
Received Date: 26-JUN-10
Extract Date: 06-JUL-10
Extracted By: HCG
Extraction Method:
Lab Prep Batch: WG79393

Analysis Date: 06-JUL-10
Analyst: HCG
Analysis Method: SW846 8260B
Matrix: SL
% Solids: 62.
Report Date: 21-JUL-10

Compound	Qualifier	Result	Units	Dilution	LOQ	ADJ LOQ	ADJ MDL	ADJ LOD
Dichlorodifluoromethane	U	6.0	ug/Kgdry	1	10	12.	1.1	6.0
Chloromethane	U	6.0	ug/Kgdry	1	10	12.	1.7	6.0
Vinyl Chloride	U	6.0	ug/Kgdry	1	10	12.	1.0	6.0
Bromomethane	U	6.0	ug/Kgdry	1	10	12.	1.3	6.0
Chloroethane	U	6.0	ug/Kgdry	1	10	12.	1.6	6.0
Trichlorofluoromethane	U	6.0	ug/Kgdry	1	10	12.	1.1	6.0
1,1-Dichloroethene	U	3.0	ug/Kgdry	1	5	6.0	1.1	3.0
Carbon Disulfide	J	2.1	ug/Kgdry	1	5	6.0	0.94	3.0
Methylene Chloride	U	15.	ug/Kgdry	1	25	30.	9.5	15.
Acetone	J	27.	ug/Kgdry	1	25	30.	6.1	15.
trans-1,2-Dichloroethene	U	3.0	ug/Kgdry	1	5	6.0	0.85	3.0
Methyl tert-butyl Ether	U	3.0	ug/Kgdry	1	5	6.0	1.3	3.0
1,1-Dichloroethane	U	3.0	ug/Kgdry	1	5	6.0	2.0	3.0
cis-1,2-Dichloroethene	U	3.0	ug/Kgdry	1	5	6.0	1.1	3.0
2,2-Dichloropropane	U	3.0	ug/Kgdry	1	5	6.0	0.60	3.0
Bromochloromethane	U	3.0	ug/Kgdry	1	5	6.0	1.1	3.0
Chloroform	U	3.0	ug/Kgdry	1	5	6.0	0.42	3.0
Carbon Tetrachloride	U	3.0	ug/Kgdry	1	5	6.0	1.6	3.0
1,1,1-Trichloroethane	U	3.0	ug/Kgdry	1	5	6.0	0.50	3.0
1,1-Dichloropropene	U	3.0	ug/Kgdry	1	5	6.0	1.1	3.0
2-Butanone	U	15.	ug/Kgdry	1	25	30.	7.1	15.
Benzene	U	3.0	ug/Kgdry	1	5	6.0	1.1	3.0
1,2-Dichloroethane	U	3.0	ug/Kgdry	1	5	6.0	1.2	3.0
Trichloroethene	U	3.0	ug/Kgdry	1	5	6.0	0.71	3.0
Dibromomethane	U	3.0	ug/Kgdry	1	5	6.0	0.61	3.0
1,2-Dichloropropane	U	3.0	ug/Kgdry	1	5	6.0	1.7	3.0
Bromodichloromethane	U	3.0	ug/Kgdry	1	5	6.0	0.72	3.0
cis-1,3-Dichloropropene	U	3.0	ug/Kgdry	1	5	6.0	0.86	3.0
Toluene	U	3.0	ug/Kgdry	1	5	6.0	1.7	3.0
4-Methyl-2-Pentanone	U	15.	ug/Kgdry	1	25	30.	7.1	15.
Tetrachloroethene	U	3.0	ug/Kgdry	1	5	6.0	1.4	3.0
trans-1,3-Dichloropropene	U	3.0	ug/Kgdry	1	5	6.0	1.0	3.0
1,1,2-Trichloroethane	U	3.0	ug/Kgdry	1	5	6.0	1.2	3.0
Dibromochloromethane	U	3.0	ug/Kgdry	1	5	6.0	1.2	3.0
1,3-Dichloropropane	U	3.0	ug/Kgdry	1	5	6.0	1.1	3.0

600 Technology Way
P.O. Box 540, Scarborough, ME 04070
Tel:(207) 874-2400 Fax:(207) 775-4029

Report of Analytical Results

Client: Tetra Tech NUS, Inc.
Lab ID: SD3757-3
Client ID: DA-SD-B179-02-0006
Project: CTO WE19 NS Newport, Sed
SDG: WE19-2

Sample Date: 25-JUN-10
Received Date: 26-JUN-10
Extract Date: 06-JUL-10
Extracted By: HCG
Extraction Method:
Lab Prep Batch: WG79393

Analysis Date: 06-JUL-10
Analyst: HCG
Analysis Method: SW846 8260B
Matrix: SL
% Solids: 62.
Report Date: 21-JUL-10

Compound	Qualifier	Result	Units	Dilution	LOQ	ADJ LOQ	ADJ MDL	ADJ LOD
1,2-Dibromoethane	U	3.0	ug/Kgdry	1	5	6.0	1.4	3.0
2-Hexanone	U	15.	ug/Kgdry	1	25	30.	5.8	15.
Chlorobenzene	U	3.0	ug/Kgdry	1	5	6.0	0.61	3.0
Ethylbenzene	U	3.0	ug/Kgdry	1	5	6.0	0.78	3.0
1,1,1,2-Tetrachloroethane	U	3.0	ug/Kgdry	1	5	6.0	0.84	3.0
m+p-Xylenes	U	6.0	ug/Kgdry	1	10	12.	2.0	6.0
o-Xylene	U	3.0	ug/Kgdry	1	5	6.0	1.6	3.0
Styrene	U	3.0	ug/Kgdry	1	5	6.0	0.61	3.0
Bromoform	U	3.0	ug/Kgdry	1	5	6.0	0.84	3.0
Isopropylbenzene	U	3.0	ug/Kgdry	1	5	6.0	1.1	3.0
Bromobenzene	U	3.0	ug/Kgdry	1	5	6.0	0.89	3.0
N-Propylbenzene	U	3.0	ug/Kgdry	1	5	6.0	1.0	3.0
1,1,2,2-Tetrachloroethane	U	3.0	ug/Kgdry	1	5	6.0	1.0	3.0
1,3,5-Trimethylbenzene	U	3.0	ug/Kgdry	1	5	6.0	0.80	3.0
2-Chlorotoluene	U	3.0	ug/Kgdry	1	5	6.0	1.3	3.0
1,2,3-Trichloropropane	U	3.0	ug/Kgdry	1	5	6.0	1.4	3.0
4-Chlorotoluene	U	3.0	ug/Kgdry	1	5	6.0	0.59	3.0
tert-Butylbenzene	U	3.0	ug/Kgdry	1	5	6.0	1.1	3.0
1,2,4-Trimethylbenzene	U	3.0	ug/Kgdry	1	5	6.0	1.0	3.0
P-Isopropyltoluene	U	3.0	ug/Kgdry	1	5	6.0	0.91	3.0
1,3-Dichlorobenzene	U	3.0	ug/Kgdry	1	5	6.0	0.74	3.0
1,4-Dichlorobenzene	U	3.0	ug/Kgdry	1	5	6.0	0.53	3.0
N-Butylbenzene	U	3.0	ug/Kgdry	1	5	6.0	1.1	3.0
sec-Butylbenzene	U	3.0	ug/Kgdry	1	5	6.0	1.1	3.0
1,2-Dichlorobenzene	U	3.0	ug/Kgdry	1	5	6.0	0.94	3.0
1,2-Dibromo-3-Chloropropane	U	3.0	ug/Kgdry	1	5	6.0	1.8	3.0
Hexachlorobutadiene	U	3.0	ug/Kgdry	1	5	6.0	0.89	3.0
1,2,4-Trichlorobenzene	U	3.0	ug/Kgdry	1	5	6.0	0.95	3.0
1,2,3-Trichlorobenzene	U	3.0	ug/Kgdry	1	5	6.0	0.91	3.0
p-Bromofluorobenzene		85.5	%					
Toluene-D8		107.	%					
1,2-Dichloroethane-D4		130.	%					
Dibromofluoromethane		128.	%					

600 Technology Way
P.O. Box 540, Scarborough, ME 04070
Tel:(207) 874-2400 Fax:(207) 775-4029

Report of Analytical Results

Client: Tetra Tech NUS, Inc.
Lab ID: SD3757-5
Client ID: DA-SD-B179-04-0006
Project: CTO WE19 NS Newport, Sed
SDG: WE19-2

Sample Date: 25-JUN-10
Received Date: 26-JUN-10
Extract Date: 06-JUL-10
Extracted By: HCG
Extraction Method:
Lab Prep Batch: WG79393

Analysis Date: 06-JUL-10
Analyst: HCG
Analysis Method: SW846 8260B
Matrix: SL
% Solids: 83.
Report Date: 21-JUL-10

Compound	Qualifier	Result	Units	Dilution	LOQ	ADJ LOQ	ADJ MDL	ADJ LOD
Dichlorodifluoromethane	U	4.4	ug/Kgdry	1	10	8.8	0.81	4.4
Chloromethane	U	4.4	ug/Kgdry	1	10	8.8	1.2	4.4
Vinyl Chloride	U	4.4	ug/Kgdry	1	10	8.8	0.76	4.4
Bromomethane	U	4.4	ug/Kgdry	1	10	8.8	0.97	4.4
Chloroethane	U	4.4	ug/Kgdry	1	10	8.8	1.1	4.4
Trichlorofluoromethane	U	4.4	ug/Kgdry	1	10	8.8	0.80	4.4
1,1-Dichloroethene	U	2.2	ug/Kgdry	1	5	4.4	0.82	2.2
Carbon Disulfide	J	1.3	ug/Kgdry	1	5	4.4	0.69	2.2
Methylene Chloride	U	11.	ug/Kgdry	1	25	22.	7.0	11.
Acetone	U	11.	ug/Kgdry	1	25	22.	4.5	11.
trans-1,2-Dichloroethene	U	2.2	ug/Kgdry	1	5	4.4	0.62	2.2
Methyl tert-butyl Ether	U	2.2	ug/Kgdry	1	5	4.4	0.97	2.2
1,1-Dichloroethane	J	3.7	ug/Kgdry	1	5	4.4	1.5	2.2
cis-1,2-Dichloroethene	U	2.2	ug/Kgdry	1	5	4.4	0.80	2.2
2,2-Dichloropropane	U	2.2	ug/Kgdry	1	5	4.4	0.44	2.2
Bromochloromethane	U	2.2	ug/Kgdry	1	5	4.4	0.80	2.2
Chloroform	U	2.2	ug/Kgdry	1	5	4.4	0.31	2.2
Carbon Tetrachloride	U	2.2	ug/Kgdry	1	5	4.4	1.1	2.2
1,1,1-Trichloroethane	J	1.6	ug/Kgdry	1	5	4.4	0.37	2.2
1,1-Dichloropropene	U	2.2	ug/Kgdry	1	5	4.4	0.80	2.2
2-Butanone	U	11.	ug/Kgdry	1	25	22.	5.2	11.
Benzene	U	2.2	ug/Kgdry	1	5	4.4	0.81	2.2
1,2-Dichloroethane	U	2.2	ug/Kgdry	1	5	4.4	0.88	2.2
Trichloroethene	U	2.2	ug/Kgdry	1	5	4.4	0.52	2.2
Dibromomethane	U	2.2	ug/Kgdry	1	5	4.4	0.45	2.2
1,2-Dichloropropane	U	2.2	ug/Kgdry	1	5	4.4	1.2	2.2
Bromodichloromethane	U	2.2	ug/Kgdry	1	5	4.4	0.53	2.2
cis-1,3-Dichloropropene	U	2.2	ug/Kgdry	1	5	4.4	0.63	2.2
Toluene	U	2.2	ug/Kgdry	1	5	4.4	1.2	2.2
4-Methyl-2-Pentanone	U	11.	ug/Kgdry	1	25	22.	5.2	11.
Tetrachloroethene	U	2.2	ug/Kgdry	1	5	4.4	1.0	2.2
trans-1,3-Dichloropropene	U	2.2	ug/Kgdry	1	5	4.4	0.76	2.2
1,1,2-Trichloroethane	U	2.2	ug/Kgdry	1	5	4.4	0.85	2.2
Dibromochloromethane	U	2.2	ug/Kgdry	1	5	4.4	0.88	2.2
1,3-Dichloropropane	U	2.2	ug/Kgdry	1	5	4.4	0.83	2.2

600 Technology Way
P.O. Box 540, Scarborough, ME 04070
Tel:(207) 874-2400 Fax:(207) 775-4029

Report of Analytical Results

Client: Tetra Tech NUS, Inc.
Lab ID: SD3757-5
Client ID: DA-SD-B179-04-0006
Project: CTO WE19 NS Newport, Sed
SDG: WE19-2

Sample Date: 25-JUN-10
Received Date: 26-JUN-10
Extract Date: 06-JUL-10
Extracted By: HCG
Extraction Method:
Lab Prep Batch: WG79393

Analysis Date: 06-JUL-10
Analyst: HCG
Analysis Method: SW846 8260B
Matrix: SL
% Solids: 83.
Report Date: 21-JUL-10

Compound	Qualifier	Result	Units	Dilution	LOQ	ADJ LOQ	ADJ MDL	ADJ LOD
1,2-Dibromoethane	U	2.2	ug/Kgdry	1	5	4.4	1.0	2.2
2-Hexanone	U	11.	ug/Kgdry	1	25	22.	4.2	11.
Chlorobenzene	U	2.2	ug/Kgdry	1	5	4.4	0.45	2.2
Ethylbenzene	U	2.2	ug/Kgdry	1	5	4.4	0.57	2.2
1,1,1,2-Tetrachloroethane	U	2.2	ug/Kgdry	1	5	4.4	0.62	2.2
m+p-Xylenes	U	4.4	ug/Kgdry	1	10	8.8	1.5	4.4
o-Xylene	U	2.2	ug/Kgdry	1	5	4.4	1.1	2.2
Styrene	U	2.2	ug/Kgdry	1	5	4.4	0.45	2.2
Bromoform	U	2.2	ug/Kgdry	1	5	4.4	0.62	2.2
Isopropylbenzene	U	2.2	ug/Kgdry	1	5	4.4	0.81	2.2
Bromobenzene	U	2.2	ug/Kgdry	1	5	4.4	0.65	2.2
N-Propylbenzene	U	2.2	ug/Kgdry	1	5	4.4	0.73	2.2
1,1,2,2-Tetrachloroethane	U	2.2	ug/Kgdry	1	5	4.4	0.74	2.2
1,3,5-Trimethylbenzene	U	2.2	ug/Kgdry	1	5	4.4	0.59	2.2
2-Chlorotoluene	U	2.2	ug/Kgdry	1	5	4.4	0.97	2.2
1,2,3-Trichloropropane	U	2.2	ug/Kgdry	1	5	4.4	1.0	2.2
4-Chlorotoluene	U	2.2	ug/Kgdry	1	5	4.4	0.43	2.2
tert-Butylbenzene	U	2.2	ug/Kgdry	1	5	4.4	0.79	2.2
1,2,4-Trimethylbenzene	U	2.2	ug/Kgdry	1	5	4.4	0.76	2.2
P-Isopropyltoluene	U	2.2	ug/Kgdry	1	5	4.4	0.67	2.2
1,3-Dichlorobenzene	U	2.2	ug/Kgdry	1	5	4.4	0.54	2.2
1,4-Dichlorobenzene	U	2.2	ug/Kgdry	1	5	4.4	0.39	2.2
N-Butylbenzene	U	2.2	ug/Kgdry	1	5	4.4	0.81	2.2
sec-Butylbenzene	U	2.2	ug/Kgdry	1	5	4.4	0.80	2.2
1,2-Dichlorobenzene	U	2.2	ug/Kgdry	1	5	4.4	0.69	2.2
1,2-Dibromo-3-Chloropropane	U	2.2	ug/Kgdry	1	5	4.4	1.3	2.2
Hexachlorobutadiene	U	2.2	ug/Kgdry	1	5	4.4	0.65	2.2
1,2,4-Trichlorobenzene	U	2.2	ug/Kgdry	1	5	4.4	0.70	2.2
1,2,3-Trichlorobenzene	U	2.2	ug/Kgdry	1	5	4.4	0.67	2.2
p-Bromofluorobenzene		96.6	%					
Toluene-D8		106.	%					
1,2-Dichloroethane-D4		132.	%					
Dibromofluoromethane		126.	%					

600 Technology Way
P.O. Box 540, Scarborough, ME 04070
Tel:(207) 874-2400 Fax:(207) 775-4029

http://www.katahdinlab.com

Katahdin
ANALYTICAL SERVICES

Cert No E87604

Report of Analytical Results

Client: Tetra Tech NUS, Inc.
Lab ID: SD3902-1
Client ID: DA-SD-RB01-070110
Project: CTO WE19 NS Newport, Sed
SDG: WE19-2

Sample Date: 01-JUL-10
Received Date: 02-JUL-10
Extract Date: 13-JUL-10
Extracted By: HCG
Extraction Method:
Lab Prep Batch: WG79634

Analysis Date: 13-JUL-10
Analyst: HCG
Analysis Method: SW846 8260B
Matrix: AQ
% Solids: NA
Report Date: 21-JUL-10

Compound	Qualifier	Result	Units	Dilution	LOQ	ADJ LOQ	ADJ MDL	ADJ LOD
Dichlorodifluoromethane	U	1.0	ug/L	1	2	2.0	0.24	1.0
Chloromethane	U	1.0	ug/L	1	2	2.0	0.36	1.0
Vinyl Chloride	U	1.0	ug/L	1	2	2.0	0.25	1.0
Bromomethane	U	1.0	ug/L	1	2	2.0	0.49	1.0
Chloroethane	U	1.0	ug/L	1	2	2.0	0.55	1.0
Trichlorofluoromethane	U	1.0	ug/L	1	2	2.0	0.24	1.0
1,1-Dichloroethene	U	0.50	ug/L	1	1	1.0	0.35	0.50
Carbon Disulfide	U	0.50	ug/L	1	1	1.0	0.25	0.50
Methylene Chloride	U	2.5	ug/L	1	5	5.0	1.1	2.5
Acetone		35.	ug/L	1	5	5.0	2.2	2.5
trans-1,2-Dichloroethene	U	0.50	ug/L	1	1	1.0	0.25	0.50
Methyl tert-butyl Ether	U	0.50	ug/L	1	1	1.0	0.36	0.50
1,1-Dichloroethane	U	0.50	ug/L	1	1	1.0	0.21	0.50
cis-1,2-Dichloroethene	U	0.50	ug/L	1	1	1.0	0.21	0.50
2,2-Dichloropropane	U	0.50	ug/L	1	1	1.0	0.25	0.50
Bromochloromethane	U	0.50	ug/L	1	1	1.0	0.21	0.50
Chloroform	J	0.36	ug/L	1	1	1.0	0.32	0.50
Carbon Tetrachloride	U	0.50	ug/L	1	1	1.0	0.22	0.50
1,1,1-Trichloroethane	U	0.50	ug/L	1	1	1.0	0.20	0.50
1,1-Dichloropropene	U	0.50	ug/L	1	1	1.0	0.21	0.50
2-Butanone	J	2.2	ug/L	1	5	5.0	1.3	2.5
Benzene	U	0.50	ug/L	1	1	1.0	0.26	0.50
1,2-Dichloroethane	U	0.50	ug/L	1	1	1.0	0.20	0.50
Trichloroethene	U	0.50	ug/L	1	1	1.0	0.28	0.50
Dibromomethane	U	0.50	ug/L	1	1	1.0	0.46	0.50
1,2-Dichloropropane	U	0.50	ug/L	1	1	1.0	0.25	0.50
Bromodichloromethane	U	0.50	ug/L	1	1	1.0	0.33	0.50
cis-1,3-Dichloropropene	U	0.50	ug/L	1	1	1.0	0.19	0.50
Toluene	U	0.50	ug/L	1	1	1.0	0.27	0.50
4-Methyl-2-Pentanone	U	2.5	ug/L	1	5	5.0	1.3	2.5
Tetrachloroethene	U	0.50	ug/L	1	1	1.0	0.40	0.50
trans-1,3-Dichloropropene	U	0.50	ug/L	1	1	1.0	0.20	0.50
1,1,2-Trichloroethane	U	0.50	ug/L	1	1	1.0	0.33	0.50
Dibromochloromethane	U	0.50	ug/L	1	1	1.0	0.30	0.50
1,3-Dichloropropane	U	0.50	ug/L	1	1	1.0	0.22	0.50

600 Technology Way
P.O. Box 540, Scarborough, ME 04070
Tel:(207) 874-2400 Fax:(207) 775-4029

Report of Analytical Results

Client: Tetra Tech NUS, Inc.
Lab ID: SD3902-1
Client ID: DA-SD-RB01-070110
Project: CTO WE19 NS Newport, Sed
SDG: WE19-2

Sample Date: 01-JUL-10
Received Date: 02-JUL-10
Extract Date: 13-JUL-10
Extracted By: HCG
Extraction Method:
Lab Prep Batch: WG79634

Analysis Date: 13-JUL-10
Analyst: HCG
Analysis Method: SW846 8260B
Matrix: AQ
% Solids: NA
Report Date: 21-JUL-10

Compound	Qualifier	Result	Units	Dilution	LOQ	ADJ LOQ	ADJ MDL	ADJ LOD
1,2-Dibromoethane	U	0.50	ug/L	1	1	1.0	0.22	0.50
2-Hexanone	U	2.5	ug/L	1	5	5.0	1.7	2.5
Chlorobenzene	U	0.50	ug/L	1	1	1.0	0.22	0.50
Ethylbenzene	U	0.50	ug/L	1	1	1.0	0.21	0.50
1,1,1,2-Tetrachloroethane	U	0.50	ug/L	1	1	1.0	0.19	0.50
m+p-Xylenes	U	1.0	ug/L	1	2	2.0	0.59	1.0
o-Xylene	U	0.50	ug/L	1	1	1.0	0.25	0.50
Styrene	U	0.50	ug/L	1	1	1.0	0.23	0.50
Bromoform	U	0.50	ug/L	1	1	1.0	0.23	0.50
Isopropylbenzene	U	0.50	ug/L	1	1	1.0	0.23	0.50
Bromobenzene	U	0.50	ug/L	1	1	1.0	0.24	0.50
N-Propylbenzene	U	0.50	ug/L	1	1	1.0	0.26	0.50
1,1,2,2-Tetrachloroethane	U	0.50	ug/L	1	1	1.0	0.38	0.50
1,3,5-Trimethylbenzene	U	0.50	ug/L	1	1	1.0	0.20	0.50
2-Chlorotoluene	U	0.50	ug/L	1	1	1.0	0.20	0.50
1,2,3-Trichloropropane	U	0.50	ug/L	1	1	1.0	0.19	0.50
4-Chlorotoluene	U	0.50	ug/L	1	1	1.0	0.26	0.50
tert-Butylbenzene	U	0.50	ug/L	1	1	1.0	0.31	0.50
1,2,4-Trimethylbenzene	U	0.50	ug/L	1	1	1.0	0.19	0.50
P-Isopropyltoluene	U	0.50	ug/L	1	1	1.0	0.25	0.50
1,3-Dichlorobenzene	U	0.50	ug/L	1	1	1.0	0.26	0.50
1,4-Dichlorobenzene	U	0.50	ug/L	1	1	1.0	0.24	0.50
N-Butylbenzene	U	0.50	ug/L	1	1	1.0	0.23	0.50
sec-Butylbenzene	U	0.50	ug/L	1	1	1.0	0.21	0.50
1,2-Dichlorobenzene	U	0.50	ug/L	1	1	1.0	0.15	0.50
1,2-Dibromo-3-Chloropropane	U	0.50	ug/L	1	1	1.0	0.50	0.50
Hexachlorobutadiene	U	0.50	ug/L	1	1	1.0	0.52	0.50
1,2,4-Trichlorobenzene	U	0.50	ug/L	1	1	1.0	0.37	0.50
1,2,3-Trichlorobenzene	U	0.50	ug/L	1	1	1.0	0.27	0.50
P-Bromofluorobenzene		106.	%					
Toluene-d8		106.	%					
1,2-Dichloroethane-d4		104.	%					
Dibromofluoromethane		110.	%					

600 Technology Way
P.O. Box 540, Scarborough, ME 04070
Tel:(207) 874-2400 Fax:(207) 775-4029

Katahdin
ANALYTICAL SERVICES

★ Units changed to ug/L

Cert No E87604

Report of Analytical Results

Client: Tetra Tech NUS, Inc.
Lab ID: SD3757-8
Client ID: DA-TB04-062510
Project: CTO WE19 NS Newport, Sed
SDG: WE19-2

Sample Date: 25-JUN-10
Received Date: 26-JUN-10
Extract Date: 06-JUL-10
Extracted By: HCG
Extraction Method:
Lab Prep Batch: WG79393

Analysis Date: 06-JUL-10
Analyst: HCG
Analysis Method: SW846 8260B
Matrix: SL
% Solids: 100
Report Date: 21-JUL-10

Compound	Qualifier	Result	Units	Dilution	LOQ	ADJ LOQ	ADJ MDL	ADJ LOD
Dichlorodifluoromethane	U	5.0	ug/Kgdry	1	10	10.	0.92	5.0
Chloromethane	U	5.0	ug/Kgdry	1	10	10.	1.4	5.0
Vinyl Chloride	U	5.0	ug/Kgdry	1	10	10.	0.87	5.0
Bromomethane	U	5.0	ug/Kgdry	1	10	10.	1.1	5.0
Chloroethane	U	5.0	ug/Kgdry	1	10	10.	1.3	5.0
Trichlorofluoromethane	U	5.0	ug/Kgdry	1	10	10.	0.91	5.0
1,1-Dichloroethene	U	2.5	ug/Kgdry	1	5	5.0	0.93	2.5
Carbon Disulfide	J	1.7	ug/Kgdry	1	5	5.0	0.78	2.5
Methylene Chloride	U	12.	ug/Kgdry	1	25	25.	7.9	12.
Acetone	U	12.	ug/Kgdry	1	25	25.	5.1	12.
trans-1,2-Dichloroethene	U	2.5	ug/Kgdry	1	5	5.0	0.71	2.5
Methyl tert-butyl Ether	U	2.5	ug/Kgdry	1	5	5.0	1.1	2.5
1,1-Dichloroethane	U	2.5	ug/Kgdry	1	5	5.0	1.7	2.5
cis-1,2-Dichloroethene	U	2.5	ug/Kgdry	1	5	5.0	0.91	2.5
2,2-Dichloropropane	U	2.5	ug/Kgdry	1	5	5.0	0.50	2.5
Bromochloromethane	U	2.5	ug/Kgdry	1	5	5.0	0.91	2.5
Chloroform	U	2.5	ug/Kgdry	1	5	5.0	0.35	2.5
Carbon Tetrachloride	U	2.5	ug/Kgdry	1	5	5.0	1.3	2.5
1,1,1-Trichloroethane	U	2.5	ug/Kgdry	1	5	5.0	0.42	2.5
1,1-Dichloropropene	U	2.5	ug/Kgdry	1	5	5.0	0.91	2.5
2-Butanone	U	12.	ug/Kgdry	1	25	25.	5.9	12.
Benzene	U	2.5	ug/Kgdry	1	5	5.0	0.92	2.5
1,2-Dichloroethane	U	2.5	ug/Kgdry	1	5	5.0	1.0	2.5
Trichloroethene	U	2.5	ug/Kgdry	1	5	5.0	0.59	2.5
Dibromomethane	U	2.5	ug/Kgdry	1	5	5.0	0.51	2.5
1,2-Dichloropropane	U	2.5	ug/Kgdry	1	5	5.0	1.4	2.5
Bromodichloromethane	U	2.5	ug/Kgdry	1	5	5.0	0.60	2.5
cis-1,3-Dichloropropene	U	2.5	ug/Kgdry	1	5	5.0	0.72	2.5
Toluene	U	2.5	ug/Kgdry	1	5	5.0	1.4	2.5
4-Methyl-2-Pentanone	U	12.	ug/Kgdry	1	25	25.	5.9	12.
Tetrachloroethene	U	2.5	ug/Kgdry	1	5	5.0	1.2	2.5
trans-1,3-Dichloropropene	U	2.5	ug/Kgdry	1	5	5.0	0.86	2.5
1,1,2-Trichloroethane	U	2.5	ug/Kgdry	1	5	5.0	0.97	2.5
Dibromochloromethane	U	2.5	ug/Kgdry	1	5	5.0	1.0	2.5
1,3-Dichloropropane	U	2.5	ug/Kgdry	1	5	5.0	0.94	2.5

600 Technology Way
P.O. Box 540, Scarborough, ME 04070
Tel:(207) 874-2400 Fax:(207) 775-4029

http://www.katahdinlab.com

Report of Analytical Results

Client: Tetra Tech NUS, Inc.
Lab ID: SD3757-8
Client ID: DA-TB04-062510
Project: CTO WE19 NS Newport, Sed
SDG: WE19-2

Sample Date: 25-JUN-10
Received Date: 26-JUN-10
Extract Date: 06-JUL-10
Extracted By: HCG
Extraction Method:
Lab Prep Batch: WG79393

Analysis Date: 06-JUL-10
Analyst: HCG
Analysis Method: SW846 8260B
Matrix: SL
% Solids: 100
Report Date: 21-JUL-10

Compound	Qualifier	Result	Units	Dilution	LOQ	ADJ LOQ	ADJ MDL	ADJ LOD
1,2-Dibromoethane	U	2.5	ug/Kgdry	1	5	5.0	1.2	2.5
2-Hexanone	U	12.	ug/Kgdry	1	25	25.	4.8	12.
Chlorobenzene	U	2.5	ug/Kgdry	1	5	5.0	0.51	2.5
Ethylbenzene	U	2.5	ug/Kgdry	1	5	5.0	0.65	2.5
1,1,1,2-Tetrachloroethane	U	2.5	ug/Kgdry	1	5	5.0	0.70	2.5
m+p-Xylenes	U	5.0	ug/Kgdry	1	10	10.	1.7	5.0
o-Xylene	U	2.5	ug/Kgdry	1	5	5.0	1.3	2.5
Styrene	U	2.5	ug/Kgdry	1	5	5.0	0.51	2.5
Bromoform	U	2.5	ug/Kgdry	1	5	5.0	0.70	2.5
Isopropylbenzene	U	2.5	ug/Kgdry	1	5	5.0	0.92	2.5
Bromobenzene	U	2.5	ug/Kgdry	1	5	5.0	0.74	2.5
N-Propylbenzene	U	2.5	ug/Kgdry	1	5	5.0	0.83	2.5
1,1,2,2-Tetrachloroethane	U	2.5	ug/Kgdry	1	5	5.0	0.84	2.5
1,3,5-Trimethylbenzene	U	2.5	ug/Kgdry	1	5	5.0	0.67	2.5
2-Chlorotoluene	U	2.5	ug/Kgdry	1	5	5.0	1.1	2.5
1,2,3-Trichloropropane	U	2.5	ug/Kgdry	1	5	5.0	1.2	2.5
4-Chlorotoluene	U	2.5	ug/Kgdry	1	5	5.0	0.49	2.5
tert-Butylbenzene	U	2.5	ug/Kgdry	1	5	5.0	0.90	2.5
1,2,4-Trimethylbenzene	U	2.5	ug/Kgdry	1	5	5.0	0.87	2.5
P-Isopropyltoluene	U	2.5	ug/Kgdry	1	5	5.0	0.76	2.5
1,3-Dichlorobenzene	U	2.5	ug/Kgdry	1	5	5.0	0.62	2.5
1,4-Dichlorobenzene	U	2.5	ug/Kgdry	1	5	5.0	0.44	2.5
N-Butylbenzene	U	2.5	ug/Kgdry	1	5	5.0	0.92	2.5
sec-Butylbenzene	U	2.5	ug/Kgdry	1	5	5.0	0.91	2.5
1,2-Dichlorobenzene	U	2.5	ug/Kgdry	1	5	5.0	0.78	2.5
1,2-Dibromo-3-Chloropropane	U	2.5	ug/Kgdry	1	5	5.0	1.5	2.5
Hexachlorobutadiene	U	2.5	ug/Kgdry	1	5	5.0	0.74	2.5
1,2,4-Trichlorobenzene	U	2.5	ug/Kgdry	1	5	5.0	0.79	2.5
1,2,3-Trichlorobenzene	U	2.5	ug/Kgdry	1	5	5.0	0.76	2.5
p-Bromofluorobenzene		98.5	%					
Toluene-D8		104.	%					
1,2-Dichloroethane-D4		125.	%					
Dibromofluoromethane		119.	%					

600 Technology Way
P.O. Box 540, Scarborough, ME 04070
Tel:(207) 874-2400 Fax:(207) 775-4029

Report of Analytical Results

Client: Tetra Tech NUS, Inc.
Lab ID: SD3757-1
Client ID: DA-SD-B179-01-0006
Project: CTO WE19 NS Newport, Sed
SDG: WE19-2

Sample Date: 25-JUN-10
Received Date: 26-JUN-10
Extract Date: 02-JUL-10
Extracted By: WS
Extraction Method: SW846 3550
Lab Prep Batch: WG79273

Analysis Date: 08-JUL-10
Analyst: JCG
Analysis Method: SW846 8270C
Matrix: SL
% Solids: 56.
Report Date: 26-JUL-10

Compound	Qualifier	Result	Units	Dilution	LOQ	ADJ LOQ	ADJ MDL	ADJ LOD
N-Nitrosodimethylamine	U	420	ug/Kgdrywt	1	330	560	150	420
Phenol	U	420	ug/Kgdrywt	1	330	560	260	420
Bis(2-Chloroethyl) Ether	U	420	ug/Kgdrywt	1	330	560	140	420
2-Chlorophenol	U	420	ug/Kgdrywt	1	330	560	280	420
1,3-Dichlorobenzene	U	420	ug/Kgdrywt	1	330	560	130	420
1,4-Dichlorobenzene	U	420	ug/Kgdrywt	1	330	560	140	420
1,2-Dichlorobenzene	U	420	ug/Kgdrywt	1	330	560	150	420
Benzyl Alcohol	U	840	ug/Kgdrywt	1	660	1100	97.	840
2-Methylphenol	U	420	ug/Kgdrywt	1	330	560	340	420
2,2'-Oxybis(1-Chloropropane)	U	420	ug/Kgdrywt	1	330	560	150	420
3&4-Methylphenol	U	420	ug/Kgdrywt	1	330	560	320	420
N-Nitroso-Di-N-Propylamine	U	420	ug/Kgdrywt	1	330	560	140	420
Hexachloroethane	U	420	ug/Kgdrywt	1	330	560	160	420
Nitrobenzene	U	420	ug/Kgdrywt	1	330	560	150	420
Isophorone	U	420	ug/Kgdrywt	1	330	560	130	420
2-Nitrophenol	U	420	ug/Kgdrywt	1	330	560	280	420
2,4-Dimethylphenol	U	420	ug/Kgdrywt	1	330	560	280	420
Bis(2-Chloroethoxy) Methane	U	420	ug/Kgdrywt	1	330	560	160	420
2,4-Dichlorophenol	U	420	ug/Kgdrywt	1	330	560	250	420
1,2,4-Trichlorobenzene	U	420	ug/Kgdrywt	1	330	560	140	420
Benzoic Acid	U	1000	ug/Kgdrywt	1	820	1400	580	1000
4-Chloroaniline	U	420	ug/Kgdrywt	1	330	560	200	420
Hexachlorobutadiene	U	420	ug/Kgdrywt	1	330	560	140	420
4-Chloro-3-Methylphenol	U	420	ug/Kgdrywt	1	330	560	280	420
2,4,6-Trichlorophenol	U	420	ug/Kgdrywt	1	330	560	260	420
2,4,5-Trichlorophenol	U	1000	ug/Kgdrywt	1	820	1400	260	1000
2-Chloronaphthalene	U	420	ug/Kgdrywt	1	330	560	150	420
2-Nitroaniline	U	1000	ug/Kgdrywt	1	820	1400	130	1000
Dimethyl Phthalate	U	420	ug/Kgdrywt	1	330	560	130	420
2,6-Dinitrotoluene	U	420	ug/Kgdrywt	1	330	560	130	420
3-Nitroaniline	U	1000	ug/Kgdrywt	1	820	1400	160	1000
2,4-Dinitrophenol	U	1000	ug/Kgdrywt	1	820	1400	640	1000
4-Nitrophenol	U	1000	ug/Kgdrywt	1	820	1400	520	1000
Dibenzofuran	U	420	ug/Kgdrywt	1	330	560	130	420
2,4-Dinitrotoluene	U	420	ug/Kgdrywt	1	330	560	140	420

600 Technology Way
P.O. Box 540, Scarborough, ME 04070
Tel:(207) 874-2400 Fax:(207) 775-4029

http://www.katahdinlab.com

Report of Analytical Results

Client: Tetra Tech NUS, Inc.
Lab ID: SD3757-1
Client ID: DA-SD-B179-01-0006
Project: CTO WE19 NS Newport, Sed
SDG: WE19-2

Sample Date: 25-JUN-10
Received Date: 26-JUN-10
Extract Date: 02-JUL-10
Extracted By: WS
Extraction Method: SW846 3550
Lab Prep Batch: WG79273

Analysis Date: 08-JUL-10
Analyst: JCG
Analysis Method: SW846 8270C
Matrix: SL
% Solids: 56.
Report Date: 26-JUL-10

Compound	Qualifier	Result	Units	Dilution	LOQ	ADJ LOQ	ADJ MDL	ADJ LOD
Diethylphthalate	U	420	ug/Kgdrywt	1	330	560	140	420
4-Chlorophenyl-Phenylether	U	420	ug/Kgdrywt	1	330	560	130	420
4-Nitroaniline	U	1000	ug/Kgdrywt	1	820	1400	230	1000
4,6-Dinitro-2-Methylphenol	U	1000	ug/Kgdrywt	1	820	1400	570	1000
N-Nitrosodiphenylamine	U	420	ug/Kgdrywt	1	330	560	370	420
1,2-Diphenylhydrazine	U	840	ug/Kgdrywt	1	660	1100	240	840
4-Bromophenyl-Phenylether	U	420	ug/Kgdrywt	1	330	560	140	420
Hexachlorobenzene	U	420	ug/Kgdrywt	1	330	560	140	420
Pentachlorophenol	U	1000	ug/Kgdrywt	1	820	1400	400	1000
Carbazole	U	420	ug/Kgdrywt	1	330	560	190	420
Di-N-Butylphthalate	U	420	ug/Kgdrywt	1	330	560	170	420
Benzidine	U	1900	ug/Kgdrywt	1	1500	2500	170	1900
Butylbenzylphthalate	U	420	ug/Kgdrywt	1	330	560	160	420
3,3'-Dichlorobenzidine	U	420	ug/Kgdrywt	1	330	560	190	420
Bis(2-Ethylhexyl)Phthalate	JB	420	ug/Kgdrywt	1	330	560	170	420
Di-N-Octylphthalate	U	420	ug/Kgdrywt	1	330	560	360	420
1,1'-biphenyl	U	420	ug/Kgdrywt	1	330	560	120	420
2,6-Dichlorophenol	U	420	ug/Kgdrywt	1	330	560	280	420
N-nitrosopyrrolidine	U	420	ug/Kgdrywt	1	330	560	280	420
2-Fluorophenol		50.3	%					
Phenol-D6		53.4	%					
Nitrobenzene-d5		53.2	%					
2-Fluorobiphenyl		59.2	%					
2,4,6-Tribromophenol		64.1	%					
Terphenyl-d14		80.8	%					

600 Technology Way
P.O. Box 540, Scarborough, ME 04070
Tel:(207) 874-2400 Fax:(207) 775-4029

http://www.katahdinlab.com

Report of Analytical Results

Client: Tetra Tech NUS, Inc.
Lab ID: SD3757-2
Client ID: DA-SD-B179-02-0006
Project: CTO WE19 NS Newport, Sed
SDG: WE19-2

Sample Date: 25-JUN-10
Received Date: 26-JUN-10
Extract Date: 02-JUL-10
Extracted By: WS
Extraction Method: SW846 3550
Lab Prep Batch: WG79273

Analysis Date: 08-JUL-10
Analyst: JCG
Analysis Method: SW846 8270C
Matrix: SL
% Solids: 61.
Report Date: 26-JUL-10

Compound	Qualifier	Result	Units	Dilution	LOQ	ADJ LOQ	ADJ MDL	ADJ LOD
N-Nitrosodimethylamine	U	380	ug/Kgdrywt	1	330	510	140	380
Phenol	U	380	ug/Kgdrywt	1	330	510	240	380
Bis(2-Chloroethyl) Ether	U	380	ug/Kgdrywt	1	330	510	120	380
2-Chlorophenol	U	380	ug/Kgdrywt	1	330	510	250	380
1,3-Dichlorobenzene	U	380	ug/Kgdrywt	1	330	510	120	380
1,4-Dichlorobenzene	U	380	ug/Kgdrywt	1	330	510	130	380
1,2-Dichlorobenzene	U	380	ug/Kgdrywt	1	330	510	140	380
Benzyl Alcohol	U	770	ug/Kgdrywt	1	660	1000	88.	770
2-Methylphenol	U	380	ug/Kgdrywt	1	330	510	310	380
2,2'-Oxybis(1-Chloropropane)	U	380	ug/Kgdrywt	1	330	510	140	380
3&4-Methylphenol	U	380	ug/Kgdrywt	1	330	510	290	380
N-Nitroso-Di-N-Propylamine	U	380	ug/Kgdrywt	1	330	510	130	380
Hexachloroethane	U	380	ug/Kgdrywt	1	330	510	150	380
Nitrobenzene	U	380	ug/Kgdrywt	1	330	510	140	380
Isophorone	U	380	ug/Kgdrywt	1	330	510	120	380
2-Nitrophenol	U	380	ug/Kgdrywt	1	330	510	260	380
2,4-Dimethylphenol	U	380	ug/Kgdrywt	1	330	510	260	380
Bis(2-Chloroethoxy) Methane	U	380	ug/Kgdrywt	1	330	510	150	380
2,4-Dichlorophenol	U	380	ug/Kgdrywt	1	330	510	230	380
1,2,4-Trichlorobenzene	U	380	ug/Kgdrywt	1	330	510	120	380
Benzoic Acid	U	950	ug/Kgdrywt	1	820	1300	530	950
4-Chloroaniline	U	380	ug/Kgdrywt	1	330	510	180	380
Hexachlorobutadiene	U	380	ug/Kgdrywt	1	330	510	130	380
4-Chloro-3-Methylphenol	U	380	ug/Kgdrywt	1	330	510	260	380
2,4,6-Trichlorophenol	U	380	ug/Kgdrywt	1	330	510	240	380
2,4,5-Trichlorophenol	U	950	ug/Kgdrywt	1	820	1300	240	950
2-Chloronaphthalene	U	380	ug/Kgdrywt	1	330	510	140	380
2-Nitroaniline	U	950	ug/Kgdrywt	1	820	1300	120	950
Dimethyl Phthalate	U	380	ug/Kgdrywt	1	330	510	120	380
2,6-Dinitrotoluene	U	380	ug/Kgdrywt	1	330	510	120	380
3-Nitroaniline	U	950	ug/Kgdrywt	1	820	1300	140	950
2,4-Dinitrophenol	U	950	ug/Kgdrywt	1	820	1300	580	950
4-Nitrophenol	U	950	ug/Kgdrywt	1	820	1300	480	950
Dibenzofuran	U	380	ug/Kgdrywt	1	330	510	120	380
2,4-Dinitrotoluene	U	380	ug/Kgdrywt	1	330	510	130	380

600 Technology Way
P.O. Box 540, Scarborough, ME 04070
Tel:(207) 874-2400 Fax:(207) 775-4029

Report of Analytical Results

Client: Tetra Tech NUS, Inc.
Lab ID: SD3757-2
Client ID: DA-SD-B179-02-0006
Project: CTO WE19 NS Newport, Sed
SDG: WE19-2

Sample Date: 25-JUN-10
Received Date: 26-JUN-10
Extract Date: 02-JUL-10
Extracted By: WS
Extraction Method: SW846 3550
Lab Prep Batch: WG79273

Analysis Date: 08-JUL-10
Analyst: JCG
Analysis Method: SW846 8270C
Matrix: SL
% Solids: 61.
Report Date: 26-JUL-10

Compound	Qualifier	Result	Units	Dilution	LOQ	ADJ LOQ	ADJ MDL	ADJ LOD
Diethylphthalate	U	380	ug/Kgdrywt	1	330	510	120	380
4-Chlorophenyl-Phenylether	U	380	ug/Kgdrywt	1	330	510	120	380
4-Nitroaniline	U	950	ug/Kgdrywt	1	820	1300	210	950
4,6-Dinitro-2-Methylphenol	U	950	ug/Kgdrywt	1	820	1300	520	950
N-Nitrosodiphenylamine	U	380	ug/Kgdrywt	1	330	510	340	380
1,2-Diphenylhydrazine	U	770	ug/Kgdrywt	1	660	1000	220	770
4-Bromophenyl-Phenylether	U	380	ug/Kgdrywt	1	330	510	130	380
Hexachlorobenzene	U	380	ug/Kgdrywt	1	330	510	130	380
Pentachlorophenol	U	950	ug/Kgdrywt	1	820	1300	370	950
Carbazole	U	380	ug/Kgdrywt	1	330	510	170	380
Di-N-Butylphthalate	U	380	ug/Kgdrywt	1	330	510	160	380
Benzidine	U	1700	ug/Kgdrywt	1	1500	2300	160	1700
Butylbenzylphthalate	U	380	ug/Kgdrywt	1	330	510	140	380
3,3'-Dichlorobenzidine	U	380	ug/Kgdrywt	1	330	510	180	380
Bis(2-Ethylhexyl)Phthalate	JB	230	ug/Kgdrywt	1	330	510	150	380
Di-N-Octylphthalate	U	380	ug/Kgdrywt	1	330	510	330	380
1,1'-biphenyl	U	380	ug/Kgdrywt	1	330	510	110	380
2,6-Dichlorophenol	U	380	ug/Kgdrywt	1	330	510	260	380
N-nitrosopyrrolidine	U	380	ug/Kgdrywt	1	330	510	260	380
2-Fluorophenol		57.2	%					
Phenol-D6		60.2	%					
Nitrobenzene-d5		58.7	%					
2-Fluorobiphenyl		68.0	%					
2,4,6-Tribromophenol		76.6	%					
Terphenyl-d14		90.7	%					

600 Technology Way
P.O. Box 540, Scarborough, ME 04070
Tel:(207) 874-2400 Fax:(207) 775-4029

Report of Analytical Results

Client: Tetra Tech NUS, Inc.
Lab ID: SD3757-4
Client ID: DA-SD-B179-04-0006
Project: CTO WE19 NS Newport, Sed
SDG: WE19-2

Sample Date: 25-JUN-10
Received Date: 26-JUN-10
Extract Date: 02-JUL-10
Extracted By: WS
Extraction Method: SW846 3550
Lab Prep Batch: WG79273

Analysis Date: 08-JUL-10
Analyst: JCG
Analysis Method: SW846 8270C
Matrix: SL
% Solids: 81.
Report Date: 26-JUL-10

Compound	Qualifier	Result	Units	Dilution	LOQ	ADJ LOQ	ADJ MDL	ADJ LOD
N-Nitrosodimethylamine	U	290	ug/Kgdrywt	1	330	380	100	290
Phenol	U	290	ug/Kgdrywt	1	330	380	180	290
Bis(2-Chloroethyl) Ether	U	290	ug/Kgdrywt	1	330	380	95.	290
2-Chlorophenol	U	290	ug/Kgdrywt	1	330	380	190	290
1,3-Dichlorobenzene	U	290	ug/Kgdrywt	1	330	380	91.	290
1,4-Dichlorobenzene	U	290	ug/Kgdrywt	1	330	380	100	290
1,2-Dichlorobenzene	U	290	ug/Kgdrywt	1	330	380	100	290
Benzyl Alcohol	U	580	ug/Kgdrywt	1	660	770	67.	580
2-Methylphenol	U	290	ug/Kgdrywt	1	330	380	230	290
2,2'-Oxybis(1-Chloropropane)	U	290	ug/Kgdrywt	1	330	380	100	290
3&4-Methylphenol	U	290	ug/Kgdrywt	1	330	380	220	290
N-Nitroso-Di-N-Propylamine	U	290	ug/Kgdrywt	1	330	380	97.	290
Hexachloroethane	U	290	ug/Kgdrywt	1	330	380	110	290
Nitrobenzene	U	290	ug/Kgdrywt	1	330	380	110	290
Isophorone	U	290	ug/Kgdrywt	1	330	380	88.	290
2-Nitrophenol	U	290	ug/Kgdrywt	1	330	380	200	290
2,4-Dimethylphenol	U	290	ug/Kgdrywt	1	330	380	190	290
Bis(2-Chloroethoxy) Methane	U	290	ug/Kgdrywt	1	330	380	110	290
2,4-Dichlorophenol	U	290	ug/Kgdrywt	1	330	380	180	290
1,2,4-Trichlorobenzene	U	290	ug/Kgdrywt	1	330	380	95.	290
Benzoic Acid	U	720	ug/Kgdrywt	1	820	960	400	720
4-Chloroaniline	U	290	ug/Kgdrywt	1	330	380	140	290
Hexachlorobutadiene	U	290	ug/Kgdrywt	1	330	380	97.	290
4-Chloro-3-Methylphenol	U	290	ug/Kgdrywt	1	330	380	190	290
2,4,6-Trichlorophenol	U	290	ug/Kgdrywt	1	330	380	180	290
2,4,5-Trichlorophenol	U	720	ug/Kgdrywt	1	820	960	180	720
2-Chloronaphthalene	U	290	ug/Kgdrywt	1	330	380	100	290
2-Nitroaniline	U	720	ug/Kgdrywt	1	820	960	88.	720
Dimethyl Phthalate	U	290	ug/Kgdrywt	1	330	380	91.	290
2,6-Dinitrotoluene	U	290	ug/Kgdrywt	1	330	380	92.	290
3-Nitroaniline	U	720	ug/Kgdrywt	1	820	960	110	720
2,4-Dinitrophenol	U	720	ug/Kgdrywt	1	820	960	440	720
4-Nitrophenol	U	720	ug/Kgdrywt	1	820	960	360	720
Dibenzofuran	U	290	ug/Kgdrywt	1	330	380	92.	290
2,4-Dinitrotoluene	U	290	ug/Kgdrywt	1	330	380	99.	290

600 Technology Way
P.O. Box 540, Scarborough, ME 04070
Tel:(207) 874-2400 Fax:(207) 775-4029

Report of Analytical Results

Client: Tetra Tech NUS, Inc.
Lab ID: SD3757-4
Client ID: DA-SD-B179-04-0006
Project: CTO WE19 NS Newport, Sed
SDG: WE19-2

Sample Date: 25-JUN-10
Received Date: 26-JUN-10
Extract Date: 02-JUL-10
Extracted By: WS
Extraction Method: SW846 3550
Lab Prep Batch: WG79273

Analysis Date: 08-JUL-10
Analyst: JCG
Analysis Method: SW846 8270C
Matrix: SL
% Solids: 81.
Report Date: 26-JUL-10

Compound	Qualifier	Result	Units	Dilution	LOQ	ADJ LOQ	ADJ MDL	ADJ LOD
Diethylphthalate	U	290	ug/Kgdrywt	1	330	380	94.	290
4-Chlorophenyl-Phenylether	U	290	ug/Kgdrywt	1	330	380	91.	290
4-Nitroaniline	U	720	ug/Kgdrywt	1	820	960	160	720
4,6-Dinitro-2-Methylphenol	U	720	ug/Kgdrywt	1	820	960	390	720
N-Nitrosodiphenylamine	U	290	ug/Kgdrywt	1	330	380	260	290
1,2-Diphenylhydrazine	U	580	ug/Kgdrywt	1	660	770	160	580
4-Bromophenyl-Phenylether	U	290	ug/Kgdrywt	1	330	380	99.	290
Hexachlorobenzene	U	290	ug/Kgdrywt	1	330	380	96.	290
Pentachlorophenol	U	720	ug/Kgdrywt	1	820	960	280	720
Carbazole	U	290	ug/Kgdrywt	1	330	380	130	290
Di-N-Butylphthalate	U	290	ug/Kgdrywt	1	330	380	120	290
Benzidine	U	1300	ug/Kgdrywt	1	1500	1800	120	1300
Butylbenzylphthalate	U	290	ug/Kgdrywt	1	330	380	110	290
3,3'-Dichlorobenzidine	U	290	ug/Kgdrywt	1	330	380	130	290
Bis(2-Ethylhexyl)Phthalate	U	290	ug/Kgdrywt	1	330	380	110	290
Di-N-Octylphthalate	U	290	ug/Kgdrywt	1	330	380	250	290
1,1'-biphenyl	U	290	ug/Kgdrywt	1	330	380	85.	290
2,6-Dichlorophenol	U	290	ug/Kgdrywt	1	330	380	190	290
N-nitrosopyrrolidine	U	290	ug/Kgdrywt	1	330	380	200	290
2-Fluorophenol		56.7	%					
Phenol-D6		59.0	%					
Nitrobenzene-d5		57.9	%					
2-Fluorobiphenyl		66.7	%					
2,4,6-Tribromophenol		66.4	%					
Terphenyl-d14		82.0	%					

600 Technology Way
P.O. Box 540, Scarborough, ME 04070
Tel:(207) 874-2400 Fax:(207) 775-4029

Report of Analytical Results

Client: Tetra Tech NUS, Inc.
Lab ID: SD3757-6
Client ID: DA-SD-DUP01-062510
Project: CTO WE19 NS Newport, Sed
SDG: WE19-2

Sample Date: 25-JUN-10
Received Date: 26-JUN-10
Extract Date: 02-JUL-10
Extracted By: WS
Extraction Method: SW846 3550
Lab Prep Batch: WG79273

Analysis Date: 09-JUL-10
Analyst: JCG
Analysis Method: SW846 8270C
Matrix: SL
% Solids: 59.
Report Date: 26-JUL-10

Compound	Qualifier	Result	Units	Dilution	LOQ	ADJ LOQ	ADJ MDL	ADJ LOD
N-Nitrosodimethylamine	U	420	ug/Kgdrywt	1	330	550	150	420
Phenol	U	420	ug/Kgdrywt	1	330	550	260	420
Bis(2-Chloroethyl) Ether	U	420	ug/Kgdrywt	1	330	550	140	420
2-Chlorophenol	U	420	ug/Kgdrywt	1	330	550	280	420
1,3-Dichlorobenzene	U	420	ug/Kgdrywt	1	330	550	130	420
1,4-Dichlorobenzene	U	420	ug/Kgdrywt	1	330	550	140	420
1,2-Dichlorobenzene	U	420	ug/Kgdrywt	1	330	550	150	420
Benzyl Alcohol	U	830	ug/Kgdrywt	1	660	1100	96.	830
2-Methylphenol	U	420	ug/Kgdrywt	1	330	550	340	420
2,2'-Oxybis(1-Chloropropane)	U	420	ug/Kgdrywt	1	330	550	150	420
3&4-Methylphenol	U	420	ug/Kgdrywt	1	330	550	310	420
N-Nitroso-Di-N-Propylamine	U	420	ug/Kgdrywt	1	330	550	140	420
Hexachloroethane	U	420	ug/Kgdrywt	1	330	550	160	420
Nitrobenzene	U	420	ug/Kgdrywt	1	330	550	150	420
Isophorone	U	420	ug/Kgdrywt	1	330	550	130	420
2-Nitrophenol	U	420	ug/Kgdrywt	1	330	550	280	420
2,4-Dimethylphenol	U	420	ug/Kgdrywt	1	330	550	280	420
Bis(2-Chloroethoxy) Methane	U	420	ug/Kgdrywt	1	330	550	160	420
2,4-Dichlorophenol	U	420	ug/Kgdrywt	1	330	550	250	420
1,2,4-Trichlorobenzene	U	420	ug/Kgdrywt	1	330	550	140	420
Benzoic Acid	U	1000	ug/Kgdrywt	1	820	1400	580	1000
4-Chloroaniline	U	420	ug/Kgdrywt	1	330	550	200	420
Hexachlorobutadiene	U	420	ug/Kgdrywt	1	330	550	140	420
4-Chloro-3-Methylphenol	U	420	ug/Kgdrywt	1	330	550	280	420
2,4,6-Trichlorophenol	U	420	ug/Kgdrywt	1	330	550	260	420
2,4,5-Trichlorophenol	U	1000	ug/Kgdrywt	1	820	1400	260	1000
2-Chloronaphthalene	U	420	ug/Kgdrywt	1	330	550	150	420
2-Nitroaniline	U	1000	ug/Kgdrywt	1	820	1400	130	1000
Dimethyl Phthalate	U	420	ug/Kgdrywt	1	330	550	130	420
2,6-Dinitrotoluene	U	420	ug/Kgdrywt	1	330	550	130	420
3-Nitroaniline	U	1000	ug/Kgdrywt	1	820	1400	160	1000
2,4-Dinitrophenol	U	1000	ug/Kgdrywt	1	820	1400	630	1000
4-Nitrophenol	U	1000	ug/Kgdrywt	1	820	1400	520	1000
Dibenzofuran	J	150	ug/Kgdrywt	1	330	550	130	420
2,4-Dinitrotoluene	U	420	ug/Kgdrywt	1	330	550	140	420

600 Technology Way
P.O. Box 540, Scarborough, ME 04070
Tel:(207) 874-2400 Fax:(207) 775-4029

Report of Analytical Results

Client: Tetra Tech NUS, Inc.
Lab ID: SD3757-6
Client ID: DA-SD-DUP01-062510
Project: CTO WE19 NS Newport, Sed
SDG: WE19-2

Sample Date: 25-JUN-10
Received Date: 26-JUN-10
Extract Date: 02-JUL-10
Extracted By: WS
Extraction Method: SW846 3550
Lab Prep Batch: WG79273

Analysis Date: 09-JUL-10
Analyst: JCG
Analysis Method: SW846 8270C
Matrix: SL
% Solids: 59.
Report Date: 26-JUL-10

Compound	Qualifier	Result	Units	Dilution	LOQ	ADJ LOQ	ADJ MDL	ADJ LOD
Diethylphthalate	U	420	ug/Kgdrywt	1	330	550	130	420
4-Chlorophenyl-Phenylether	U	420	ug/Kgdrywt	1	330	550	130	420
4-Nitroaniline	U	1000	ug/Kgdrywt	1	820	1400	220	1000
4,6-Dinitro-2-Methylphenol	U	1000	ug/Kgdrywt	1	820	1400	570	1000
N-Nitrosodiphenylamine	U	420	ug/Kgdrywt	1	330	550	370	420
1,2-Diphenylhydrazine	U	830	ug/Kgdrywt	1	660	1100	240	830
4-Bromophenyl-Phenylether	U	420	ug/Kgdrywt	1	330	550	140	420
Hexachlorobenzene	U	420	ug/Kgdrywt	1	330	550	140	420
Pentachlorophenol	U	1000	ug/Kgdrywt	1	820	1400	400	1000
Carbazole	J	250	ug/Kgdrywt	1	330	550	190	420
Di-N-Butylphthalate	U	420	ug/Kgdrywt	1	330	550	170	420
Benzidine	U	1900	ug/Kgdrywt	1	1500	2500	170	1900
Butylbenzylphthalate	U	420	ug/Kgdrywt	1	330	550	160	420
3,3'-Dichlorobenzidine	U	420	ug/Kgdrywt	1	330	550	190	420
Bis(2-Ethylhexyl)Phthalate	JB	170	ug/Kgdrywt	1	330	550	160	420
Di-N-Octylphthalate	U	420	ug/Kgdrywt	1	330	550	350	420
1,1'-biphenyl	U	420	ug/Kgdrywt	1	330	550	120	420
2,6-Dichlorophenol	U	420	ug/Kgdrywt	1	330	550	280	420
N-nitrosopyrrolidine	U	420	ug/Kgdrywt	1	330	550	280	420
2-Fluorophenol		51.2	%					
Phenol-D6		53.9	%					
Nitrobenzene-d5		52.5	%					
2-Fluorobiphenyl		57.8	%					
2,4,6-Tribromophenol		58.8	%					
Terphenyl-d14		65.7	%					

600 Technology Way
P.O. Box 540, Scarborough, ME 04070
Tel:(207) 874-2400 Fax:(207) 775-4029

http://www.katahdinlab.com

Katahdin
ANALYTICAL SERVICES

Cert No E87604

Report of Analytical Results

Client: Tetra Tech NUS, Inc.
Lab ID: SD3902-1
Client ID: DA-SD-RB01-070110
Project: CTO WE19 NS Newport, Sed
SDG: WE19-2

Sample Date: 01-JUL-10
Received Date: 02-JUL-10
Extract Date: 06-JUL-10
Extracted By: WS
Extraction Method: SW846 3510
Lab Prep Batch: WG79374

Analysis Date: 08-JUL-10
Analyst: JCG
Analysis Method: SW846 8270C
Matrix: AQ
% Solids: NA
Report Date: 27-JUL-10

Compound	Qualifier	Result	Units	Dilution	LOQ	ADJ LOQ	ADJ MDL	ADJ LOD
N-Nitrosodimethylamine	U	7.2	ug/L	1	10	9.6	2.1	7.2
Phenol	U	7.2	ug/L	1	10	9.6	1.7	7.2
Bis(2-Chloroethyl) Ether	U	7.2	ug/L	1	10	9.6	1.9	7.2
2-Chlorophenol	U	7.2	ug/L	1	10	9.6	3.1	7.2
1,3-Dichlorobenzene	U	7.2	ug/L	1	10	9.6	2.0	7.2
1,4-Dichlorobenzene	U	7.2	ug/L	1	10	9.6	2.1	7.2
1,2-Dichlorobenzene	U	7.2	ug/L	1	10	9.6	2.3	7.2
Benzyl Alcohol	U	14.	ug/L	1	20	19.	1.2	14.
2,2'-Oxybis(1-Chloropropane)	U	7.2	ug/L	1	10	9.6	2.0	7.2
2-Methylphenol	U	7.2	ug/L	1	10	9.6	3.6	7.2
Hexachloroethane	U	7.2	ug/L	1	10	9.6	2.2	7.2
N-Nitroso-Di-N-Propylamine	U	7.2	ug/L	1	10	9.6	1.9	7.2
3&4-Methylphenol	U	7.2	ug/L	1	10	9.6	5.4	7.2
Nitrobenzene	U	7.2	ug/L	1	10	9.6	3.0	7.2
Isophorone	U	7.2	ug/L	1	10	9.6	1.6	7.2
2-Nitrophenol	U	7.2	ug/L	1	10	9.6	2.6	7.2
2,4-Dimethylphenol	U	7.2	ug/L	1	10	9.6	4.2	7.2
Bis(2-Chloroethoxy) Methane	U	7.2	ug/L	1	10	9.6	2.0	7.2
2,4-Dichlorophenol	U	7.2	ug/L	1	10	9.6	2.9	7.2
1,2,4-Trichlorobenzene	U	7.2	ug/L	1	10	9.6	2.0	7.2
Benzoic Acid	U	18.	ug/L	1	25	24.	2.9	18.
4-Chloroaniline	U	7.2	ug/L	1	10	9.6	1.8	7.2
Hexachlorobutadiene	U	7.2	ug/L	1	10	9.6	1.7	7.2
4-Chloro-3-Methylphenol	U	7.2	ug/L	1	10	9.6	3.5	7.2
2,4,6-Trichlorophenol	U	7.2	ug/L	1	10	9.6	2.6	7.2
2,4,5-Trichlorophenol	U	18.	ug/L	1	25	24.	3.5	18.
2-Chloronaphthalene	U	7.2	ug/L	1	10	9.6	3.8	7.2
2-Nitroaniline	U	18.	ug/L	1	25	24.	1.7	18.
Dimethyl Phthalate	U	7.2	ug/L	1	10	9.6	1.9	7.2
2,6-Dinitrotoluene	U	7.2	ug/L	1	10	9.6	1.9	7.2
3-Nitroaniline	U	18.	ug/L	1	25	24.	1.4	18.
2,4-Dinitrophenol	U	18.	ug/L	1	25	24.	0.96	18.
Dibenzofuran	U	7.2	ug/L	1	10	9.6	1.5	7.2
4-Nitrophenol	U	18.	ug/L	1	25	24.	1.7	18.
2,4-Dinitrotoluene	U	7.2	ug/L	1	10	9.6	2.1	7.2

600 Technology Way
P.O. Box 540, Scarborough, ME 04070
Tel:(207) 874-2400 Fax:(207) 775-4029

http://www.katahdinlab.com

Report of Analytical Results

Client: Tetra Tech NUS, Inc.
Lab ID: SD3902-1
Client ID: DA-SD-RB01-070110
Project: CTO WE19 NS Newport, Sed
SDG: WE19-2

Sample Date: 01-JUL-10
Received Date: 02-JUL-10
Extract Date: 06-JUL-10
Extracted By: WS
Extraction Method: SW846 3510
Lab Prep Batch: WG79374

Analysis Date: 08-JUL-10
Analyst: JCG
Analysis Method: SW846 8270C
Matrix: AQ
% Solids: NA
Report Date: 27-JUL-10

Compound	Qualifier	Result	Units	Dilution	LOQ	ADJ LOQ	ADJ MDL	ADJ LOD
Diethylphthalate	U	7.2	ug/L	1	10	9.6	1.9	7.2
4-Chlorophenyl-Phenylether	U	7.2	ug/L	1	10	9.6	2.1	7.2
4-Nitroaniline	U	18.	ug/L	1	25	24.	1.5	18.
4,6-Dinitro-2-Methylphenol	U	18.	ug/L	1	25	24.	1.9	18.
N-Nitrosodiphenylamine	U	7.2	ug/L	1	10	9.6	3.6	7.2
1,2-Diphenylhydrazine	U	14.	ug/L	1	20	19.	1.9	14.
4-Bromophenyl-Phenylether	U	7.2	ug/L	1	10	9.6	1.8	7.2
Hexachlorobenzene	U	7.2	ug/L	1	10	9.6	2.0	7.2
Pentachlorophenol	U	18.	ug/L	1	25	24.	2.2	18.
Carbazole	U	7.2	ug/L	1	10	9.6	2.0	7.2
Di-N-Butylphthalate	U	7.2	ug/L	1	10	9.6	2.4	7.2
Benzidine	U	36.	ug/L	1	50	48.	16.	36.
Butylbenzylphthalate	U	7.2	ug/L	1	10	9.6	1.8	7.2
3,3'-Dichlorobenzidine	U	18.	ug/L	1	10	9.6	12.	18.
Bis(2-Ethylhexyl) Phthalate	JB	3.9	ug/L	1	10	9.6	1.6	7.2
Di-N-Octylphthalate	U	7.2	ug/L	1	10	9.6	1.7	7.2
1,1'-Biphenyl	U	7.2	ug/L	1	10	9.6	2.6	7.2
2,6-Dichlorophenol	U	7.2	ug/L	1	10	9.6	1.9	7.2
N-Nitrosopyrrolidine	U	7.2	ug/L	1	10	9.6	1.2	7.2
2-Fluorophenol		40.8	%					
Phenol-D6		26.1	%					
Nitrobenzene-d5		69.5	%					
2-Fluorobiphenyl		72.3	%					
2,4,6-Tribromophenol		75.9	%					
Terphenyl-d14		96.6	%					

600 Technology Way
P.O. Box 540, Scarborough, ME 04070
Tel:(207) 874-2400 Fax:(207) 775-4029

http://www.katahdinlab.com

Katahdin
ANALYTICAL SERVICES

Accredited in accordance with nelac
Cert No E87604

Report of Analytical Results

Client: Tetra Tech NUS, Inc.
Lab ID: SD3757-1
Client ID: DA-SD-B179-01-0006
Project: CTO WE19 NS Newport, Sed
SDG: WE19-2

Sample Date: 25-JUN-10
Received Date: 26-JUN-10
Extract Date: 02-JUL-10
Extracted By: WS
Extraction Method: SW846 3550
Lab Prep Batch: WG79274

Analysis Date: 08-JUL-10
Analyst: JCG
Analysis Method: SW846 M8270C
Matrix: SL
% Solids: 56.
Report Date: 26-JUL-10

Compound	Qualifier	Result	Units	Dilution	LOQ	ADJ LOQ	ADJ MDL	ADJ LOD
Naphthalene		67.	ug/Kgdrywt	1	20	34.	4.4	17.
2-Methylnaphthalene	J	12.	ug/Kgdrywt	1	20	34.	3.7	17.
Acenaphthylene	U	17.	ug/Kgdrywt	1	20	34.	2.0	17.
Acenaphthene		110	ug/Kgdrywt	1	20	34.	2.5	17.
Fluorene		130	ug/Kgdrywt	1	20	34.	5.4	17.
Phenanthrene	E	740	ug/Kgdrywt	1	20	34.	3.0	17.
Anthracene		140	ug/Kgdrywt	1	20	34.	2.0	17.
Fluoranthene	E	1000	ug/Kgdrywt	1	20	34.	3.0	17.
Pyrene	E	990	ug/Kgdrywt	1	20	34.	3.6	17.
Benzo (a) anthracene	E	560	ug/Kgdrywt	1	20	34.	3.2	17.
Chrysene	E	450	ug/Kgdrywt	1	20	34.	2.9	17.
Benzo (b) Fluoranthene	E	660	ug/Kgdrywt	1	20	34.	4.1	17.
Benzo(k)fluoranthene		200	ug/Kgdrywt	1	20	34.	5.2	17.
Benzo(a)pyrene		420	ug/Kgdrywt	1	20	34.	5.6	17.
Indeno (1,2,3-cd) pyrene		270	ug/Kgdrywt	1	20	34.	3.2	17.
Dibenzo (a,h) anthracene		68.	ug/Kgdrywt	1	20	34.	3.0	17.
Benzo(g,h,i)perylene		250	ug/Kgdrywt	1	20	34.	3.4	17.
2-Methylnaphthalene-D10		66.0	%					
Fluorene-D10		58.8	%					
Pyrene-D10		73.4	%					

600 Technology Way
P.O. Box 540, Scarborough, ME 04070
Tel:(207) 874-2400 Fax:(207) 775-4029

Katahdin
ANALYTICAL SERVICES

Accredited in accordance with nelac
Cert No E87604

Report of Analytical Results

Client: Tetra Tech NUS, Inc.
Lab ID: SD3757-1DL
Client ID: DA-SD-B179-01-0006
Project: CTO WE19 NS Newport, Sed
SDG: WE19-2

Sample Date: 25-JUN-10
Received Date: 26-JUN-10
Extract Date: 02-JUL-10
Extracted By: WS
Extraction Method: SW846 3550
Lab Prep Batch: WG79274

Analysis Date: 09-JUL-10
Analyst: JCG
Analysis Method: SW846 M8270C
Matrix: SL
% Solids: 56.
Report Date: 26-JUL-10

Compound	Qualifier	Result	Units	Dilution	LOQ	ADJ LOQ	ADJ MDL	ADJ LOD
Naphthalene	J	88.	ug/Kgdrywt	4	20	140	18.	68.
2-Methylnaphthalene	U	68.	ug/Kgdrywt	4	20	140	15.	68.
Acenaphthylene	U	68.	ug/Kgdrywt	4	20	140	8.1	68.
Acenaphthene	J	110	ug/Kgdrywt	4	20	140	10.	68.
Fluorene	J	140	ug/Kgdrywt	4	20	140	22.	68.
Phenanthrene		950	ug/Kgdrywt	4	20	140	12.	68.
Anthracene		200	ug/Kgdrywt	4	20	140	8.1	68.
Fluoranthene		1300	ug/Kgdrywt	4	20	140	12.	68.
Pyrene		1200	ug/Kgdrywt	4	20	140	14.	68.
Benzo (a) anthracene		630	ug/Kgdrywt	4	20	140	13.	68.
Chrysene		560	ug/Kgdrywt	4	20	140	12.	68.
Benzo (b) Fluoranthene		690	ug/Kgdrywt	4	20	140	16.	68.
Benzo(k)fluoranthene		280	ug/Kgdrywt	4	20	140	21.	68.
Benzo(a)pyrene		490	ug/Kgdrywt	4	20	140	22.	68.
Indeno (1,2,3-cd) pyrene		360	ug/Kgdrywt	4	20	140	13.	68.
Dibenzo (a,h) anthracene	J	85.	ug/Kgdrywt	4	20	140	12.	68.
Benzo(g,h,i)perylene		300	ug/Kgdrywt	4	20	140	14.	68.
2-Methylnaphthalene-D10		61.0	%					
Fluorene-D10		66.1	%					
Pyrene-D10		86.2	%					

unlysed

600 Technology Way
P.O. Box 540, Scarborough, ME 04070
Tel:(207) 874-2400 Fax:(207) 775-4029

http://www.katahdinlab.com

Katahdin
ANALYTICAL SERVICES

Accredited in accordance with nelac
Cert No E87604

Report of Analytical Results

Client: Tetra Tech NUS, Inc.
Lab ID: SD3757-2
Client ID: DA-SD-B179-02-0006
Project: CTO WE19 NS Newport, Sed
SDG: WE19-2

Sample Date: 25-JUN-10
Received Date: 26-JUN-10
Extract Date: 02-JUL-10
Extracted By: WS
Extraction Method: SW846 3550
Lab Prep Batch: WG79274

Analysis Date: 08-JUL-10
Analyst: JCG
Analysis Method: SW846 M8270C
Matrix: SL
% Solids: 61.
Report Date: 26-JUL-10

Compound	Qualifier	Result	Units	Dilution	LOQ	ADJ LOQ	ADJ MDL	ADJ LOD
Naphthalene	J	21.	ug/Kgdrywt	1	20	31.	4.0	16.
2-Methylnaphthalene	U	16.	ug/Kgdrywt	1	20	31.	3.4	16.
Acenaphthylene	U	16.	ug/Kgdrywt	1	20	31.	1.9	16.
Acenaphthene		44.	ug/Kgdrywt	1	20	31.	2.3	16.
Fluorene		43.	ug/Kgdrywt	1	20	31.	5.0	16.
Phenanthrene		380	ug/Kgdrywt	1	20	31.	2.8	16.
Anthracene		72.	ug/Kgdrywt	1	20	31.	1.9	16.
Fluoranthene	E	530	ug/Kgdrywt	1	20	31.	2.8	16.
Pyrene	E	720	ug/Kgdrywt	1	20	31.	3.3	16.
Benzo (a) anthracene		250	ug/Kgdrywt	1	20	31.	2.9	16.
Chrysene		220	ug/Kgdrywt	1	20	31.	2.6	16.
Benzo (b) Fluoranthene		400	ug/Kgdrywt	1	20	31.	3.7	16.
Benzo(k)fluoranthene		120	ug/Kgdrywt	1	20	31.	4.8	16.
Benzo(a)pyrene		250	ug/Kgdrywt	1	20	31.	5.1	16.
Indeno (1,2,3-cd) pyrene		230	ug/Kgdrywt	1	20	31.	2.9	16.
Dibenzo (a,h) anthracene		43.	ug/Kgdrywt	1	20	31.	2.8	16.
Benzo(g,h,i)perylene		330	ug/Kgdrywt	1	20	31.	3.1	16.
2-Methylnaphthalene-D10		73.0	%					
Fluorene-D10		64.5	%					
Pyrene-D10		92.9	%					

600 Technology Way
P.O. Box 540, Scarborough, ME 04070
Tel:(207) 874-2400 Fax:(207) 775-4029

Report of Analytical Results

Client: Tetra Tech NUS, Inc.
Lab ID: SD3757-2DL
Client ID: DA-SD-B179-02-0006
Project: CTO WE19 NS Newport, Sed
SDG: WE19-2

Sample Date: 25-JUN-10
Received Date: 26-JUN-10
Extract Date: 02-JUL-10
Extracted By: WS
Extraction Method: SW846 3550
Lab Prep Batch: WG79274

Analysis Date: 09-JUL-10
Analyst: JCG
Analysis Method: SW846 M8270C
Matrix: SL
% Solids: 61.
Report Date: 26-JUL-10

Compound	Qualifier	Result	Units	Dilution	LOQ	ADJ LOQ	ADJ MDL	ADJ LOD
Naphthalene	J	26.	ug/Kgdrywt	4	20	120	16.	62.
2-Methylnaphthalene	U	62.	ug/Kgdrywt	4	20	120	14.	62.
Acenaphthylene	U	62.	ug/Kgdrywt	4	20	120	7.4	62.
Acenaphthene	J	46.	ug/Kgdrywt	4	20	120	9.3	62.
Fluorene	J	58.	ug/Kgdrywt	4	20	120	20.	62.
Phenanthrene		440	ug/Kgdrywt	4	20	120	11.	62.
Anthracene	J	91.	ug/Kgdrywt	4	20	120	7.4	62.
Fluoranthene		710	ug/Kgdrywt	4	20	120	11.	62.
Pyrene		850	ug/Kgdrywt	4	20	120	13.	62.
Benzo (a) anthracene		260	ug/Kgdrywt	4	20	120	12.	62.
Chrysene		310	ug/Kgdrywt	4	20	120	10.	62.
Benzo (b) Fluoranthene		420	ug/Kgdrywt	4	20	120	15.	62.
Benzo(k)fluoranthene		160	ug/Kgdrywt	4	20	120	19.	62.
Benzo(a)pyrene		290	ug/Kgdrywt	4	20	120	20.	62.
Indeno (1,2,3-cd) pyrene		280	ug/Kgdrywt	4	20	120	12.	62.
Dibenzo (a,h) anthracene	J	45.	ug/Kgdrywt	4	20	120	11.	62.
Benzo(g,h,i)perylene		380	ug/Kgdrywt	4	20	120	12.	62.
2-Methylnaphthalene-D10		70.5	%					
Fluorene-D10		75.8	%					
Pyrene-D10		104.	%					

only used

600 Technology Way
P.O. Box 540, Scarborough, ME 04070
Tel:(207) 874-2400 Fax:(207) 775-4029

Report of Analytical Results

Client: Tetra Tech NUS, Inc.
Lab ID: SD3757-4
Client ID: DA-SD-B179-04-0006
Project: CTO WE19 NS Newport, Sed
SDG: WE19-2

Sample Date: 25-JUN-10
Received Date: 26-JUN-10
Extract Date: 02-JUL-10
Extracted By: WS
Extraction Method: SW846 3550
Lab Prep Batch: WG79274

Analysis Date: 08-JUL-10
Analyst: JCG
Analysis Method: SW846 M8270C
Matrix: SL
% Solids: 81.
Report Date: 26-JUL-10

Compound	Qualifier	Result	Units	Dilution	LOQ	ADJ LOQ	ADJ MDL	ADJ LOD
Naphthalene	J	5.1	ug/Kgdrywt	1	20	23.	3.0	12.
2-Methylnaphthalene	U	12.	ug/Kgdrywt	1	20	23.	2.6	12.
Acenaphthylene	U	12.	ug/Kgdrywt	1	20	23.	1.4	12.
Acenaphthene	J	12.	ug/Kgdrywt	1	20	23.	1.8	12.
Fluorene	J	8.9	ug/Kgdrywt	1	20	23.	3.7	12.
Phenanthrene		98.	ug/Kgdrywt	1	20	23.	2.1	12.
Anthracene		26.	ug/Kgdrywt	1	20	23.	1.4	12.
Fluoranthene		160	ug/Kgdrywt	1	20	23.	2.1	12.
Pyrene		140	ug/Kgdrywt	1	20	23.	2.4	12.
Benzo (a) anthracene		71.	ug/Kgdrywt	1	20	23.	2.2	12.
Chrysene		74.	ug/Kgdrywt	1	20	23.	2.0	12.
Benzo (b) Fluoranthene		120	ug/Kgdrywt	1	20	23.	2.8	12.
Benzo(k)fluoranthene		47.	ug/Kgdrywt	1	20	23.	3.6	12.
Benzo(a)pyrene		69.	ug/Kgdrywt	1	20	23.	3.8	12.
Indeno (1,2,3-cd) pyrene		60.	ug/Kgdrywt	1	20	23.	2.2	12.
Dibenzo (a,h) anthracene	J	12.	ug/Kgdrywt	1	20	23.	2.1	12.
Benzo(g,h,i)perylene		43.	ug/Kgdrywt	1	20	23.	2.3	12.
2-Methylnaphthalene-D10		69.6	%					
Fluorene-D10		52.0	%					
Pyrene-D10		78.6	%					

600 Technology Way
P.O. Box 540, Scarborough, ME 04070
Tel:(207) 874-2400 Fax:(207) 775-4029

http://www.katahdinlab.com

Report of Analytical Results

Client: Tetra Tech NUS, Inc.
Lab ID: SD3757-6
Client ID: DA-SD-DUP01-062510
Project: CTO WE19 NS Newport, Sed
SDG: WE19-2

Sample Date: 25-JUN-10
Received Date: 26-JUN-10
Extract Date: 02-JUL-10
Extracted By: WS
Extraction Method: SW846 3550
Lab Prep Batch: WG79274

Analysis Date: 08-JUL-10
Analyst: JCG
Analysis Method: SW846 M8270C
Matrix: SL
% Solids: 59.
Report Date: 26-JUL-10

Compound	Qualifier	Result	Units	Dilution	LOQ	ADJ LOQ	ADJ MDL	ADJ LOD
Naphthalene		200	ug/Kgdrywt	1	20	34.	4.4	17.
2-Methylnaphthalene		35.	ug/Kgdrywt	1	20	34.	3.7	17.
Acenaphthylene	U	17.	ug/Kgdrywt	1	20	34.	2.0	17.
Acenaphthene		200	ug/Kgdrywt	1	20	34.	2.5	17.
Fluorene		230	ug/Kgdrywt	1	20	34.	5.4	17.
Phenanthrene	E	1300	ug/Kgdrywt	1	20	34.	3.0	17.
Anthracene		280	ug/Kgdrywt	1	20	34.	2.0	17.
Fluoranthene	E	1600	ug/Kgdrywt	1	20	34.	3.0	17.
Pyrene	E	1800	ug/Kgdrywt	1	20	34.	3.5	17.
Benzo (a) anthracene	E	840	ug/Kgdrywt	1	20	34.	3.2	17.
Chrysene	E	680	ug/Kgdrywt	1	20	34.	2.8	17.
Benzo (b) Fluoranthene	E	890	ug/Kgdrywt	1	20	34.	4.0	17.
Benzo(k)fluoranthene		270	ug/Kgdrywt	1	20	34.	5.2	17.
Benzo(a)pyrene	E	580	ug/Kgdrywt	1	20	34.	5.5	17.
Indeno (1,2,3-cd) pyrene		380	ug/Kgdrywt	1	20	34.	3.2	17.
Dibenzo (a,h) anthracene		95.	ug/Kgdrywt	1	20	34.	3.0	17.
Benzo(g,h,i)perylene		350	ug/Kgdrywt	1	20	34.	3.4	17.
2-Methylnaphthalene-D10		63.9	%					
Fluorene-D10		51.1	%					
Pyrene-D10		77.6	%					

600 Technology Way
P.O. Box 540, Scarborough, ME 04070
Tel:(207) 874-2400 Fax:(207) 775-4029

http://www.katahdinlab.com

Katahdin
ANALYTICAL SERVICES

Accredited in accordance with NELAC
Cert No E87604

Report of Analytical Results

Client: Tetra Tech NUS, Inc.
Lab ID: SD3757-6DL
Client ID: DA-SD-DUP01-062510
Project: CTO WE19 NS Newport, Sed
SDG: WE19-2

Sample Date: 25-JUN-10
Received Date: 26-JUN-10
Extract Date: 02-JUL-10
Extracted By: WS
Extraction Method: SW846 3550
Lab Prep Batch: WG79274

Analysis Date: 09-JUL-10
Analyst: JCG
Analysis Method: SW846 M8270C
Matrix: SL
% Solids: 59.
Report Date: 26-JUL-10

Compound	Qualifier	Result	Units	Dilution	LOQ	ADJ LOQ	ADJ MDL	ADJ LOD
Naphthalene		260	ug/Kgdrywt	7	20	240	30.	120
2-Methylnaphthalene	U	120	ug/Kgdrywt	7	20	240	26.	120
Acenaphthylene	U	120	ug/Kgdrywt	7	20	240	14.	120
Acenaphthene		260	ug/Kgdrywt	7	20	240	18.	120
Fluorene		320	ug/Kgdrywt	7	20	240	38.	120
Phenanthrene		1900	ug/Kgdrywt	7	20	240	21.	120
Anthracene		420	ug/Kgdrywt	7	20	240	14.	120
Fluoranthene		2300	ug/Kgdrywt	7	20	240	21.	120
Pyrene		1700	ug/Kgdrywt	7	20	240	25.	120
Benzo (a) anthracene		930	ug/Kgdrywt	7	20	240	22.	120
Chrysene		910	ug/Kgdrywt	7	20	240	20.	120
Benzo (b) Fluoranthene		1000	ug/Kgdrywt	7	20	240	28.	120
Benzo(k)fluoranthene		410	ug/Kgdrywt	7	20	240	36.	120
Benzo(a)pyrene		760	ug/Kgdrywt	7	20	240	39.	120
Indeno (1,2,3-cd) pyrene		560	ug/Kgdrywt	7	20	240	22.	120
Dibenzo (a,h) anthracene	J	130	ug/Kgdrywt	7	20	240	21.	120
Benzo(g,h,i)perylene		450	ug/Kgdrywt	7	20	240	24.	120
2-Methylnaphthalene-D10		68.0	%					
Fluorene-D10		67.4	%					
Pyrene-D10		74.3	%					

Only used

600 Technology Way
P.O. Box 540, Scarborough, ME 04070
Tel:(207) 874-2400 Fax:(207) 775-4029

Report of Analytical Results

Client: Tetra Tech NUS, Inc.
Lab ID: SD3902-1
Client ID: DA-SD-RB01-070110
Project: CTO WE19 NS Newport, Sed
SDG: WE19-2

Sample Date: 01-JUL-10
Received Date: 02-JUL-10
Extract Date: 06-JUL-10
Extracted By: WS
Extraction Method: SW846 3510
Lab Prep Batch: WG79373

Analysis Date: 08-JUL-10
Analyst: JCG
Analysis Method: SW846 M8270C
Matrix: AQ
% Solids: NA
Report Date: 23-JUL-10

Compound	Qualifier	Result	Units	Dilution	LOQ	ADJ LOQ	ADJ MDL	ADJ LOD
Naphthalene	U	0.096	ug/L	1	.2	0.19	0.062	0.096
2-Methylnaphthalene	U	0.096	ug/L	1	.2	0.19	0.074	0.096
Acenaphthylene	U	0.096	ug/L	1	.2	0.19	0.052	0.096
Acenaphthene	U	0.096	ug/L	1	.2	0.19	0.062	0.096
Fluorene	U	0.096	ug/L	1	.2	0.19	0.059	0.096
Phenanthrene	U	0.096	ug/L	1	.2	0.19	0.049	0.096
Anthracene	U	0.096	ug/L	1	.2	0.19	0.042	0.096
Fluoranthene	U	0.096	ug/L	1	.2	0.19	0.070	0.096
Pyrene	U	0.096	ug/L	1	.2	0.19	0.057	0.096
Benzo (a) anthracene	U	0.096	ug/L	1	.2	0.19	0.044	0.096
Chrysene	U	0.096	ug/L	1	.2	0.19	0.035	0.096
Benzo (b) Fluoranthene	U	0.096	ug/L	1	.2	0.19	0.086	0.096
Benzo(k)fluoranthene	U	0.096	ug/L	1	.2	0.19	0.047	0.096
Benzo(a)pyrene	U	0.096	ug/L	1	.2	0.19	0.063	0.096
Indeno (1,2,3-cd) pyrene	U	0.096	ug/L	1	.2	0.19	0.050	0.096
Dibenzo (a,h) anthracene	U	0.096	ug/L	1	.2	0.19	0.067	0.096
Benzo(g,h,i)perylene	U	0.096	ug/L	1	.2	0.19	0.062	0.096
2-Methylnaphthalene-D10		84.2	%					
Fluorene-D10		74.1	%					
pyrene-d10		95.8	%					

600 Technology Way
P.O. Box 540, Scarborough, ME 04070
Tel:(207) 874-2400 Fax:(207) 775-4029

Tetra Tech NUS **INTERNAL CORRESPONDENCE**

TO: **J. FORRELLI** **DATE: AUGUST 20, 2010**

FROM: **A. COGNETTI** **COPIES: DV FILE**

SUBJECT: **ORGANIC AND INORGANIC DATA VALIDATION: VOC/ 1,4-DIOXANE/OVG/CYANIDE/NITRATE/NITRITE/AMMONIA/ORTHOPHOSPHATE/ SULFATE/SULFIDE/TOTAL ORGANIC CARBON**
CTO WE19, NAVSTA NEWPORT
SDG WE19-3

SAMPLES: 17/Aqueous/VOC

DA-FB01-070110	DA-GW-RB01-070110	DA-MW-03B-062810
DA-MW-04B-063010	DA-MW-08A-062910	DA-MW-09B-062910
DA-MW-103B-070110	DA-MW-105B-062810	DA-MW-11-062910
DA-MW-12-063010	DA-MW-122-063010	DA-MW-13B-063010
DA-MW-DUP01-062810	DA-MW-DUP02-062910	DA-TB05-062810
DA-TB06-062910	DA-TB07-063010	

13/Aqueous/1,4-dioxane

DA-FB01-070110	DA-GW-RB01-070110	DA-MW-03B-062810
DA-MW-04B-063010	DA-MW-09B-062910	DA-MW-103B-070110
DA-MW-105B-062810	DA-MW-11-062910	DA-MW-12-063010
DA-MW-122-063010	DA-MW-13B-063010	DA-MW-DUP01-062810
DA-MW-DUP02-062910		

8/Aqueous/OVG/Nitrate/Nitrite/Ammonia/Orthophosphate/Sulfate/Sulfide/Total Organic Carbon

DA-MW-03B-062810	DA-MW-09B-062910	DA-MW-103B-070110
DA-MW-105B-062810	DA-MW-11-062910	DA-MW-12-063010
DA-MW-DUP01-062810	DA-MW-DUP02-062910	

7/Aqueous/Cyanide

DA-GW-RB01-070110	DA-MW-09B-062910	DA-MW-103B-070110
DA-MW-11-062910	DA-MW-12-063010	DA-MW-13B-063010
DA-MW-DUP02-062910		

Overview

The sample set for NAVSTA Newport, CTO WE19, SDG WE19-3 consists of twelve (12) environmental aqueous samples, a field blank, a rinsate blank and three (3) trip blanks analyzed for volatile organic compounds (VOCs). Eleven (11) environmental aqueous samples, a field blank and a rinse blank were analyzed for 1,4-dioxane. Eight (8) aqueous environmental samples were analyzed for organic volatile gases (OVG), nitrate, nitrite, ammonia, orthophosphate, sulfate, sulfide and Total Organic Carbon.
Six (6) environmental aqueous samples and a rinse blank were analyzed for cyanide. The field duplicate pairs included in this SDG are the following: DA-MW-03B-062810/DA-MW-DUP01-062810 and DA-MW-11-

062910/DA-MW-DUP02-062910.

The samples were collected on June 10, 28, 29, 30, 2010 and July 1, 2010 and analyzed by Katahdin Analytical Services. All analyses were conducted in accordance with Naval Facilities Engineering Service Center (NFESC) Quality Assurance/Quality Control (QA/QC) criteria using SW-846 Methods 8260B for VOCs, 8270C SIM for 1,4-dioxane analysis, RSK-SOP 175 for OVG and 9012M for cyanide analytical and reporting protocol. Anions, nitrite, nitrate, sulfate and orthophosphate were analyzed by EPA method 300.0. Ammonia and total organic carbon analyses were conducted by EPA methods EPA350.1 and EPA 415.1, respectively. A Tier 2 data validation was performed on the following analyses: VOC, 1,4-dioxane, OVG and cyanide. A Tier 1 validation was performed on the aforementioned anions, ammonia and TOC.

The data contained in this SDG were validated with regard to the following parameters:

*	• Data Completeness
	• Holding Times
*	• GC/MS Tuning
	• Initial and Continuing Calibration
	• Laboratory Method and/or Field Quality Control Blanks
*	• Surrogate Spike Recoveries
*	• Laboratory Control Spike / Laboratory Control Spike Duplicate Recoveries
*	• Internal Standards Performance
	• Matrix Spike/Matrix Spike Duplicate Results
	• Field Duplicate Precision
*	• Detection Limits
*	• Compound Quantitation
*	• Compound Identification

The asterisk (*) indicates that all quality control criteria were met for this parameter. Qualified (if applicable) analytical results are summarized in Appendix A. Results as reported by the laboratory are presented in Appendix B. Appendix C contains Region I worksheets, and Appendix D contains the documentation to support the findings as discussed in this data validation report. The attached Table summarizes the validation qualifications which are based on the following information:

HOLD TIME

Sample DA-TB05-062810 was analyzed greater than 14 days but less than 28 days. The positive and nondetected results in sample DA-TB05-062810 were qualified as estimated (J) and (UJ), respectively.

CALIBRATIONS

The VOC initial calibration percent relative standard deviation (%RSD) for acetone and 1,2-dibromo-3-chloropropane exceeded the 15% quality control limit on July 8, 2010 on instrument GCMS-F. The positive and nondetected acetone and 1,2-dibromo-3-chloropropane results in the affected samples DA-FB01-070110, DA-GW-RB01-07110 and DA-MW-103B-070110 were qualified as estimated (J) and (UJ), respectively.

The VOC continuing calibration percent difference (%D) for acetone was greater than the 20% quality control limit on July 8, 2010 @ 22:09 on instrument GCMS-D. The positive and nondetected acetone results in the affected samples were qualified as estimated (J) and (UJ), respectively. The affected samples are the

following: DA-TB07-063010, DA-TB06-062910, DA-MW-08A-062910, DA-MW-11-062910, DA-MW-DUP02-062910, DA-MW-122-063010, DA-MW-13B-063010 and DA-MW-12-063010. Samples DA-MW-09B-062910 and DA-MW-04B-063010 acetone results were qualified due to blank contamination.

The OVG initial calibration %RSD for methane was greater than the 15% quality control limit on February 9, 2010 on instrument GC05. The positive methane results in all of the samples were qualified as estimated (J).

The OVG continuing calibration %D for ethane was greater than the 15% quality control limit on July 8, 2010 @ 17:51 affecting the diluted sample DA-MW-09B-062910. No action was taken because the ethane result used for validation purposes in sample DA-MW-09B-062910 was taken from the undiluted sample.

BLANKS

The following contaminants were detected in the laboratory method blanks at the following maximum concentrations:

Contaminant	Maximum Concentration (ug/L)	Action Level (ug/L)
Methylene chloride (1)	1.6	16.0
1,2,4-trichlorobenzene (2)	0.39	1.95
Tetrachloroethane (3)	0.44	2.2
2-butanone (4,5)	3.7	37.0
Acetone (4,5)	49	490
Chloroform (4,5)	0.4	2.0
1,4-dioxane (4)	0.47	2.35

(1) Maximum concentration of methylene chloride detected in laboratory method blank associated with batch WG79634 analyzed on July 13, 2010 affecting samples DA-FB01-070110, DA-GW-RB01-070110 and DA-MW-103B-070110.
(2) Maximum concentration of 1,2,4-trichlorobenzene detected in laboratory method blank associated with batch WG79497 analyzed on July 8, 2010 affecting samples DA-MW-09B-062910, DA-MW-08A-062910, DA-MW-11-062910, DA-MW-DUP02-062910, DA-MW-04B-063010, DA-MW-122-063010, DA-MW-13B-063010 and DA-MW-12-063010.
(3) Maximum concentration of tetrachloroethane detected in laboratory method blank associated with batch WG79439 analyzed on July 7, 2010 affecting sample DA-MW-DUP01-062810.
(4) Maximum concentration of contaminants detected in the field blank DA-FB01-070110 affecting all samples.
(5) Maximum concentration of contaminants detected in the rinse blank DA-GW-RB01-070110.

An action level of 10X the maximum concentration of common laboratory contaminants methylene chloride, 2-butanone and chloroform was established in order to evaluate samples for blank contamination. An action level of 5X the maximum concentration of 1,2,4-trichlorobenzene, tetrachloroethane and 1,4-dioxane was established in order to evaluate samples for blank contamination. Dilution factors and sample aliquots were taken into consideration during the application of all action levels. The positive tetrachloroethane result in sample DA-MW-DUP01-062810 was greater than the reporting limit and less than the action level. The result was qualified as (U). The positive 2-butanone result in sample DA-MW-09B-062910 was greater than the reporting limit and less than the action level and qualified as (U). The positive acetone results in samples DA-MW-04B-063010 and DA-MW-09B-063010 were qualified as (U). The positive chloroform detections in samples DA-MW-03B-062810 and

DA-MW-DUP01-062810 were qualified as (U). The positive 1,4-dioxane results in samples DA-MW-03B-062810, DA-MW-04B-063010 and DA-MW-DUP01-062810 were qualified as (U). No qualification was made on positive results greater than the action level. Field quality control blanks and trip blanks are not qualified due to blank contamination.

MATRIX SPIKE / MATRIX SPIKE DUPLICATE (MS / MSD)

The VOC MS/MSD percent recovery (%R) was less than the lower quality control limit but greater than 10% for several compounds in both the MS and MSD sample of DA-MW-09B-062910. The compounds are the following: 1,1-dichloroethane, cis-1,3-dichloropropene, trans-1,3-dichloropropene, m+p xylenes, o-xylene, styrene, bromoform, 1,2,3-trimethylbenzene, 1,2,4-trimethylbenzene and p-isopropyltoluene. The positive and nondetected results of the aforementioned compounds were qualified as estimated (J) and (UJ), respectively in sample DA-MW-09B-062910.

The VOC MS/MSD relative percent difference (%RPD) exceeded the quality control limit for styrene in sample DA-MW-09B-062910. The nondetected styrene result in sample DA-MW-09B-062910 was qualified as estimated (UJ).

LABORATORY CONTROL SPIKE/LABORATORY CONTROL SPIKE DUPLICATE

The VOC Laboratory Control sample (LCS) %R for hexachlorobutadiene in batch WG79497 was greater than the upper quality control limit. All samples were non-detects for hexachlorobutadiene so no data qualification was necessary.

FIELD DUPLICATE PRECISION

Field duplicate imprecision was noted in the field duplicate pair DA-MW-DUP01-062810 and DA-MW-03B-062810. The RPD was greater than the 30% quality control limit for 1,1,1-trichloroethane, 1,1-dichloroethane, 1,1-dichloroethene, carbon tetrachloride, cis-1,2-dichloroethene, and tetrachloroethene. No action was taken on the results in the field duplicate pair because the variance was less than 2X the reporting limit.

The positive trichloroethene result in the diluted sample of DA-MW-DUP01-062810 was compared to the positive trichloroethene result in DA-MW-03B-062810. The RPD was greater than 30% and the variance was greater than 2X the reporting limit. The positive trichloroethene results in the field duplicate pair DA-MW-DUP01-062810 and DA-MW-03B-062810 were qualified as estimated (J).

ADDITIONAL COMMENTS

Positive results reported at concentrations greater than the method detection limit (MDL) but less than the Reporting Limit (RL) were qualified as estimated (J).

Sample DA-MW-DUP01-062810 was re-analyzed at a 2-fold dilution due to the concentration of trichloroethene exceeding the linear calibration range in the undiluted sample. Only the trichloroethene result from the 2-fold dilution was used for validation and reporting purposes. Results for all other compounds were reported from the undiluted analysis of this sample.

The nondetected 1,2-dichloroethane, benzene, chloroform, tetrachloroethene, trichloroethene, vinyl chloride and 1,4-dioxane results exceeded the project action limits according to the SOW in June 2010.

EXECUTIVE SUMMARY

Laboratory Performance: Sample DA-TB05-062810 was analyzed outside of hold time in the VOC fraction resulting in the qualification of data. There were VOC and OVG compounds with %RSDs in the initial calibration greater than the quality control limits. Acetone in the VOC fraction and methane in the OVG fraction had %Ds in the continuing calibration exceeding quality control limits resulting in the qualification of data. There were several compounds in the VOC and OVG fractions with %Rs exceeding quality control limits in the MS/MSD of sample DA-MW-09B-062910. The %RPD for styrene in the MS/MSD of sample DA-MW-09B062910 exceeded quality control limits. Tetrachloroethane was detected in the laboratory method blank.

Other Factors Affecting Data Quality: Field duplicate imprecision was noted in the field duplicate pair DA-MW-03B-062810 and DA-MW-DUP01-062810 for trichloroethene. The field blank and rinse blank contained 2-butanone, acetone, chloroform and 1,4-dioxane.

The data for these analyses were reviewed with reference to the Region I EPA "Data Validation Functional Guidelines - Part II" (12/96), and the Department of Defense (DoD) document entitled, "Quality Systems Manual (QSM) for Environmental Laboratories" (January 2006). The text of this report has been formulated to address only those problem areas affecting data quality.

Ann Cognetti

TetraTech NUS
Ann Cognetti
Chemist/Data Validator

Edward Sullivan /jfs

TetraTech NUS
Joseph A. Samchuck
Data Validation Quality Assurance Officer

Attachments:

1. Appendix A - Qualified Analytical Results
2. Appendix B - Results as Reported by the Laboratory
3. Appendix C - Regional Worksheets
4. Appendix D - Support Documentation

APPENDIX A

QUALIFIED LABORATORY RESULTS

Data Validation Qualifier Codes:

A = Lab Blank Contamination
B = Field Blank Contamination
C = Calibration Noncompliance (e.g. % RSDs, %Ds, ICVs, CCVs, RRFs, etc.)
C01 = GC/MS Tuning Noncompliance
D = MS/MSD Recovery Noncompliance
E = LCS/LCSD Recovery Noncompliance
F = Lab Duplicate Imprecision
G = Field Duplicate Imprecision
H = Holding Time Exceedance
I = ICP Serial Dilution Noncompliance
J = GFAA PDS - GFAA MSA's $r < 0.995$
K = ICP Interference - includes ICS % R Noncompliance
L = Instrument Calibration Range Exceedance
M = Sample Preservation Noncompliance
N = Internal Standard Noncompliance
N01 = Internal Standard Recovery Noncompliance Dioxins
N02 = Recovery Standard Noncompliance Dioxins
N03 = Clean-up Standard Noncompliance Dioxins
O = Poor Instrument Performance (e.g. base-line drifting)
P = Uncertainty near detection limit (< 2 x IDL for inorganics and <CRQL for organics)
Q = Other problems (can be any number of issues; e.g. poor chromatography,interferences, etc.)
R = Surrogates Recovery Noncompliance
S = Pesticide/PCB Resolution
T = % Breakdown Noncompliance for DDT and Endrin
U = % Difference between columns/detectors >25% for positive results determined via GC/HPLC
V = Non-linear calibrations; correlation coefficient $r < 0.995$
W = EMPC result
X = Signal to noise response drop
Y = Percent solids <30%
Z = Uncertainty at 2 sigma deviation is greater than sample activity

PROJ_NO: 02124	NSAMPLE	DA-FB01-070110			DA-GW-RB01-070110			DA-MW-03B-062810			DA-MW-04B-063010		
SDG: WE19-3	LAB_ID	SD3897-3			SD3897-2			SD3782-2			SD3855-1		
FRACTION: OV	SAMP_DATE	7/1/2010			7/1/2010			6/28/2010			6/30/2010		
MEDIA: WATER	QC_TYPE	NM			NM			NM			NM		
	UNITS	UG/L			UG/L			UG/L			UG/L		
	PCT_SOLIDS	0.0			0.0			0.0			0.0		
	DUP_OF												
PARAMETER	RESULT	VQL	QLCD	RESULT	VQL	QLCD	RESULT	VQL	QLCD	RESULT	VQL	QLCD
1,1,1,2-TETRACHLOROETHANE	0.5	U		0.5	U		0.5	U		0.5	U	
1,1,1-TRICHLOROETHANE	0.5	U		0.5	U		1.2			0.29	J	P
1,1,2,2-TETRACHLOROETHANE	0.5	U		0.5	U		0.5	U		0.5	U	
1,1,2-TRICHLOROETHANE	0.5	U		0.5	U		0.5	U		0.5	U	
1,1-DICHLOROETHANE	0.5	U		0.5	U		2.1			24		
1,1-DICHLOROETHENE	0.5	U		0.5	U		0.5	U		0.77	J	P
1,1-DICHLOROPROPENE	0.5	U		0.5	U		0.5	U		0.5	U	
1,2,3-TRICHLOROBENZENE	0.5	U		0.5	U		0.5	U		0.5	U	
1,2,3-TRICHLOROPROPANE	0.5	U		0.5	U		0.5	U		0.5	U	
1,2,4-TRICHLOROBENZENE	0.5	U		0.5	U		0.5	U		0.5	U	
1,2,4-TRIMETHYLBENZENE	0.5	U		0.5	U		0.5	U		0.5	U	
1,2-DIBROMO-3-CHLOROPROPANE	0.75	UJ	C	0.75	UJ	C	0.75	U		0.75	U	
1,2-DIBROMOETHANE	0.5	U		0.5	U		0.5	U		0.5	U	
1,2-DICHLOROBENZENE	0.5	U		0.5	U		0.5	U		0.5	U	
1,2-DICHLOROETHANE	0.5	U		0.5	U		0.5	U		0.5	U	
1,2-DICHLOROPROPANE	0.5	U		0.5	U		0.5	U		0.5	U	
1,3,5-TRIMETHYLBENZENE	0.5	U		0.5	U		0.5	U		0.5	U	
1,3-DICHLOROBENZENE	0.5	U		0.5	U		0.5	U		0.5	U	
1,3-DICHLOROPROPANE	0.5	U		0.5	U		0.5	U		0.5	U	
1,4-DICHLOROBENZENE	0.5	U		0.5	U		0.5	U		0.5	U	
2,2-DICHLOROPROPANE	0.5	U		0.5	U		0.5	U		0.5	U	
2-BUTANONE	3.7	J	P	2.4	J	P	2.5	U		2.5	U	
2-CHLOROTOLUENE	0.5	U		0.5	U		0.5	U		0.5	U	
2-HEXANONE	2.5	U		2.5	U		2.5	U		2.5	U	
4-CHLOROTOLUENE	0.5	U		0.5	U		0.5	U		0.5	U	
4-ISOPROPYLTOLUENE	0.5	U		0.5	U		0.5	U		0.5	U	
4-METHYL-2-PENTANONE	2.5	U		2.5	U		2.5	U		2.5	U	
ACETONE	49	J	C	40	J	C	2.5	U		4.4	U	B
BENZENE	0.5	U		0.5	U		0.5	U		0.5	U	
BROMOBENZENE	0.5	U		0.5	U		0.5	U		0.5	U	
BROMOCHLOROMETHANE	0.5	U		0.5	U		0.5	U		0.5	U	
BROMODICHLOROMETHANE	0.5	U		0.5	U		0.5	U		0.5	U	
BROMOFORM	0.5	U		0.5	U		0.5	U		0.5	U	
BROMOMETHANE	1	U		1	U		1	U		1	U	
CARBON DISULFIDE	0.5	U		0.5	U		0.5	U		0.5	U	

PROJ_NO: 02124	NSAMPLE	DA-MW-08A-062910			DA-MW-09B-062910			DA-MW-103B-070110			DA-MW-105B-062810		
SDG: WE19-3	LAB_ID	SD3822-2			SD3822-1			SD3897-1			SD3782-1		
FRACTION: OV	SAMP_DATE	6/29/2010			6/29/2010			7/1/2010			6/28/2010		
MEDIA: WATER	QC_TYPE	NM			NM			NM			NM		
	UNITS	UG/L			UG/L			UG/L			UG/L		
	PCT_SOLIDS	0.0			0.0			0.0			0.0		
	DUP_OF												
PARAMETER		RESULT	VQL	QLCD	RESULT	VQL	QLCD	RESULT	VQL	QLCD	RESULT	VQL	QLCD
1,1,1,2-TETRACHLOROETHANE		0.5	U		0.5	U		0.5	U		0.5	U	
1,1,1-TRICHLOROETHANE		0.5	U		41			7.9			3.3		
1,1,2,2-TETRACHLOROETHANE		0.5	U		0.5	U		0.5	U		0.5	U	
1,1,2-TRICHLOROETHANE		0.5	U		0.5	U		0.5	U		0.5	U	
1,1-DICHLOROETHANE		0.5	U		82	J	D	160			110		
1,1-DICHLOROETHENE		0.5	U		18			12			7.4		
1,1-DICHLOROPROPENE		0.5	U		0.5	U		0.5	U		0.5	U	
1,2,3-TRICHLOROBENZENE		0.5	U		0.5	U		0.5	U		0.5	U	
1,2,3-TRICHLOROPROPANE		0.5	U		0.5	U		0.5	U		0.5	U	
1,2,4-TRICHLOROBENZENE		0.5	U		0.5	U		0.5	U		0.5	U	
1,2,4-TRIMETHYLBENZENE		0.5	U		0.5	UJ	D	0.5	U		0.5	U	
1,2-DIBROMO-3-CHLOROPROPANE		0.75	U		0.75	U		0.75	UJ	C	0.75	U	
1,2-DIBROMOETHANE		0.5	U		0.5	U		0.5	U		0.5	U	
1,2-DICHLOROBENZENE		0.5	U		0.5	U		0.5	U		0.5	U	
1,2-DICHLOROETHANE		0.5	U		0.5	U		0.5	U		0.5	U	
1,2-DICHLOROPROPANE		0.5	U		0.5	U		0.5	U		0.5	U	
1,3,5-TRIMETHYLBENZENE		0.5	U		0.5	UJ	D	0.5	U		0.5	U	
1,3-DICHLOROBENZENE		0.5	U		0.5	U		0.5	U		0.5	U	
1,3-DICHLOROPROPANE		0.5	U		0.5	U		0.5	U		0.5	U	
1,4-DICHLOROBENZENE		0.5	U		0.5	U		0.5	U		0.5	U	
2,2-DICHLOROPROPANE		0.5	U		0.5	U		0.5	U		0.5	U	
2-BUTANONE		2.5	U		12	U	B	2.5	U		2.5	U	
2-CHLOROTOLUENE		0.5	U		0.5	U		0.5	U		0.5	U	
2-HEXANONE		2.5	U		2.5	U		2.5	U		2.5	U	
4-CHLOROTOLUENE		0.5	U		0.5	U		0.5	U		0.5	U	
4-ISOPROPYLTOLUENE		0.5	U		0.5	UJ	D	0.5	U		0.5	U	
4-METHYL-2-PENTANONE		2.5	U		2.5	U		2.5	U		2.5	U	
ACETONE		2.5	UJ	C	27	U	B	2.5	UJ	C	2.5	U	
BENZENE		0.5	U		0.5	U		0.5	U		0.5	U	
BROMOBENZENE		0.5	U		0.5	U		0.5	U		0.5	U	
BROMOCHLOROMETHANE		0.5	U		0.5	U		0.5	U		0.5	U	
BROMODICHLOROMETHANE		0.5	U		0.5	U		0.5	U		0.5	U	
BROMOFORM		0.5	U		0.5	UJ	D	0.5	U		0.5	U	
BROMOMETHANE		1	U		1	U		1	U		1	U	
CARBON DISULFIDE		0.5	U		0.5	U		0.5	U		0.5	U	

PROJ_NO: 02124	NSAMPLE	DA-MW-11-062910			DA-MW-12-063010			DA-MW-122-063010			DA-MW-13B-063010		
SDG: WE19-3	LAB_ID	SD3822-3			SD3855-4			SD3855-2			SD3855-3		
FRACTION: OV	SAMP_DATE	6/29/2010			6/30/2010			6/30/2010			6/30/2010		
MEDIA: WATER	QC_TYPE	NM			NM			NM			NM		
	UNITS	UG/L			UG/L			UG/L			UG/L		
	PCT_SOLIDS	0.0			0.0			0.0			0.0		
	DUP_OF												
PARAMETER		RESULT	VQL	QLCD	RESULT	VQL	QLCD	RESULT	VQL	QLCD	RESULT	VQL	QLCD
1,1,1,2-TETRACHLOROETHANE		0.5	U		0.5	U		0.5	U		0.5	U	
1,1,1-TRICHLOROETHANE		0.5	U		0.5	U		0.5	U		0.5	U	
1,1,2,2-TETRACHLOROETHANE		0.5	U		0.5	U		0.5	U		0.5	U	
1,1,2-TRICHLOROETHANE		0.5	U		0.5	U		0.5	U		0.5	U	
1,1-DICHLOROETHANE		0.5	U		0.5	U		0.84	J	P	0.5	U	
1,1-DICHLOROETHENE		0.5	U		0.5	U		0.5	U		0.5	U	
1,1-DICHLOROPROPENE		0.5	U		0.5	U		0.5	U		0.5	U	
1,2,3-TRICHLOROBENZENE		0.5	U		0.5	U		0.5	U		0.5	U	
1,2,3-TRICHLOROPROPANE		0.5	U		0.5	U		0.5	U		0.5	U	
1,2,4-TRICHLOROBENZENE		0.5	U		0.5	U		0.5	U		0.5	U	
1,2,4-TRIMETHYLBENZENE		0.5	U		0.5	U		0.5	U		0.5	U	
1,2-DIBROMO-3-CHLOROPROPANE		0.75	U		0.75	U		0.75	U		0.75	U	
1,2-DIBROMOETHANE		0.5	U		0.5	U		0.5	U		0.5	U	
1,2-DICHLOROBENZENE		0.5	U		0.5	U		0.5	U		0.5	U	
1,2-DICHLOROETHANE		0.5	U		0.5	U		0.5	U		0.5	U	
1,2-DICHLOROPROPANE		0.5	U		0.5	U		0.5	U		0.5	U	
1,3,5-TRIMETHYLBENZENE		0.5	U		0.5	U		0.5	U		0.5	U	
1,3-DICHLOROBENZENE		0.5	U		0.5	U		0.5	U		0.5	U	
1,3-DICHLOROPROPANE		0.5	U		0.5	U		0.5	U		0.5	U	
1,4-DICHLOROBENZENE		0.5	U		0.5	U		0.5	U		0.5	U	
2,2-DICHLOROPROPANE		0.5	U		0.5	U		0.5	U		0.5	U	
2-BUTANONE		2.5	U		2.5	U		2.5	U		2.5	U	
2-CHLOROTOLUENE		0.5	U		0.5	U		0.5	U		0.5	U	
2-HEXANONE		2.5	U		2.5	U		2.5	U		2.5	U	
4-CHLOROTOLUENE		0.5	U		0.5	U		0.5	U		0.5	U	
4-ISOPROPYLTOLUENE		0.5	U		0.5	U		0.5	U		0.5	U	
4-METHYL-2-PENTANONE		2.5	U		2.5	U		2.5	U		2.5	U	
ACETONE		2.5	UJ	C	2.5	UJ	C	2.5	UJ	C	2.5	UJ	C
BENZENE		0.5	U		0.5	U		0.5	U		0.5	U	
BROMOBENZENE		0.5	U		0.5	U		0.5	U		0.5	U	
BROMOCHLOROMETHANE		0.5	U		0.5	U		0.5	U		0.5	U	
BROMODICHLOROMETHANE		0.5	U		0.5	U		0.5	U		0.5	U	
BROMOFORM		0.5	U		0.5	U		0.5	U		0.5	U	
BROMOMETHANE		1	U		1	U		1	U		1	U	
CARBON DISULFIDE		0.5	U		0.5	U		0.5	U		0.5	U	

PROJ_NO: 02124	NSAMPLE	DA-MW-DUP01-062810			DA-MW-DUP01-062810DL			DA-MW-DUP02-062910			DA-TB05-062810		
SDG: WE19-3	LAB_ID	SD3782-3			SD3782-3DL			SD3822-4			SD3782-4		
FRACTION: OV	SAMP_DATE	6/28/2010			6/28/2010			6/29/2010			6/10/2010		
MEDIA: WATER	QC_TYPE	NM			NM			NM			NM		
	UNITS	UG/L			UG/L			UG/L			UG/L		
	PCT_SOLIDS	0.0			0.0			0.0			0.0		
	DUP_OF	DA-MW-03B-062810						DA-MW-11-062910					
PARAMETER		RESULT	VQL	QLCD	RESULT	VQL	QLCD	RESULT	VQL	QLCD	RESULT	VQL	QLCD
1,1,1,2-TETRACHLOROETHANE		0.5	U					0.5	U		0.5	UJ	H
1,1,1-TRICHLOROETHANE		2.7						0.5	U		0.5	UJ	H
1,1,2,2-TETRACHLOROETHANE		0.5	U					0.5	U		0.5	UJ	H
1,1,2-TRICHLOROETHANE		0.5	U					0.5	U		0.5	UJ	H
1,1-DICHLOROETHANE		3.8						0.5	U		0.5	UJ	H
1,1-DICHLOROETHENE		0.76	J	P				0.5	U		0.5	UJ	H
1,1-DICHLOROPROPENE		0.5	U					0.5	U		0.5	UJ	H
1,2,3-TRICHLOROBENZENE		0.5	U					0.5	U		0.5	UJ	H
1,2,3-TRICHLOROPROPANE		0.5	U					0.5	U		0.5	UJ	H
1,2,4-TRICHLOROBENZENE		0.5	U					0.5	U		0.5	UJ	H
1,2,4-TRIMETHYLBENZENE		0.5	U					0.5	U		0.5	UJ	H
1,2-DIBROMO-3-CHLOROPROPANE		0.75	U					0.75	U		0.75	UJ	H
1,2-DIBROMOETHANE		0.5	U					0.5	U		0.5	UJ	H
1,2-DICHLOROBENZENE		0.5	U					0.5	U		0.5	UJ	H
1,2-DICHLOROETHANE		0.5	U					0.5	U		0.5	UJ	H
1,2-DICHLOROPROPANE		0.5	U					0.5	U		0.5	UJ	H
1,3,5-TRIMETHYLBENZENE		0.5	U					0.5	U		0.5	UJ	H
1,3-DICHLOROBENZENE		0.5	U					0.5	U		0.5	UJ	H
1,3-DICHLOROPROPANE		0.5	U					0.5	U		0.5	UJ	H
1,4-DICHLOROBENZENE		0.5	U					0.5	U		0.5	UJ	H
2,2-DICHLOROPROPANE		0.5	U					0.5	U		0.5	UJ	H
2-BUTANONE		2.5	U					2.5	U		2.5	UJ	H
2-CHLOROTOLUENE		0.5	U					0.5	U		0.5	UJ	H
2-HEXANONE		2.5	U					2.5	U		2.5	UJ	H
4-CHLOROTOLUENE		0.5	U					0.5	U		0.5	UJ	H
4-ISOPROPYLTOLUENE		0.5	U					0.5	U		0.5	UJ	H
4-METHYL-2-PENTANONE		2.5	U					2.5	U		2.5	UJ	H
ACETONE		2.5	U					2.5	UJ	C	2.5	UJ	H
BENZENE		0.5	U					0.5	U		0.5	UJ	H
BROMOBENZENE		0.5	U					0.5	U		0.5	UJ	H
BROMOCHLOROMETHANE		0.5	U					0.5	U		0.5	UJ	H
BROMODICHLOROMETHANE		0.5	U					0.5	U		0.5	UJ	H
BROMOFORM		0.5	U					0.5	U		0.5	UJ	H
BROMOMETHANE		1	U					1	U		1	UJ	H
CARBON DISULFIDE		0.5	U					0.5	U		0.5	UJ	H

PROJ_NO: 02124	NSAMPLE	DA-TB06-062910			DA-TB07-063010		
SDG: WE19-3	LAB_ID	SD3822-5			SD3855-5		
FRACTION: OV	SAMP_DATE	6/29/2010			6/30/2010		
MEDIA: WATER	QC_TYPE	NM			NM		
	UNITS	UG/L			UG/L		
	PCT_SOLIDS	0.0			0.0		
	DUP_OF						
PARAMETER		RESULT	VQL	QLCD	RESULT	VQL	QLCD
1,1,1,2-TETRACHLOROETHANE		0.5	U		0.5	U	
1,1,1-TRICHLOROETHANE		0.5	U		0.5	U	
1,1,2,2-TETRACHLOROETHANE		0.5	U		0.5	U	
1,1,2-TRICHLOROETHANE		0.5	U		0.5	U	
1,1-DICHLOROETHANE		0.5	U		0.5	U	
1,1-DICHLOROETHENE		0.5	U		0.5	U	
1,1-DICHLOROPROPENE		0.5	U		0.5	U	
1,2,3-TRICHLOROBENZENE		0.5	U		0.5	U	
1,2,3-TRICHLOROPROPANE		0.5	U		0.5	U	
1,2,4-TRICHLOROBENZENE		0.5	U		0.5	U	
1,2,4-TRIMETHYLBENZENE		0.5	U		0.5	U	
1,2-DIBROMO-3-CHLOROPROPANE		0.75	U		0.75	U	
1,2-DIBROMOETHANE		0.5	U		0.5	U	
1,2-DICHLOROBENZENE		0.5	U		0.5	U	
1,2-DICHLOROETHANE		0.5	U		0.5	U	
1,2-DICHLOROPROPANE		0.5	U		0.5	U	
1,3,5-TRIMETHYLBENZENE		0.5	U		0.5	U	
1,3-DICHLOROBENZENE		0.5	U		0.5	U	
1,3-DICHLOROPROPANE		0.5	U		0.5	U	
1,4-DICHLOROBENZENE		0.5	U		0.5	U	
2,2-DICHLOROPROPANE		0.5	U		0.5	U	
2-BUTANONE		2.5	U		2.5	U	
2-CHLOROTOLUENE		0.5	U		0.5	U	
2-HEXANONE		2.5	U		2.5	U	
4-CHLOROTOLUENE		0.5	U		0.5	U	
4-ISOPROPYLTOLUENE		0.5	U		0.5	U	
4-METHYL-2-PENTANONE		2.5	U		2.5	U	
ACETONE		2.5	UJ	C	2.5	UJ	C
BENZENE		0.5	U		0.5	U	
BROMOBENZENE		0.5	U		0.5	U	
BROMOCHLOROMETHANE		0.5	U		0.5	U	
BROMODICHLOROMETHANE		0.5	U		0.5	U	
BROMOFORM		0.5	U		0.5	U	
BROMOMETHANE		1	U		1	U	
CARBON DISULFIDE		0.5	U		0.5	U	

PROJ_NO: 02124	NSAMPLE	DA-FB01-070110			DA-GW-RB01-070110			DA-MW-03B-062810			DA-MW-04B-063010		
SDG: WE19-3	LAB_ID	SD3897-3			SD3897-2			SD3782-2			SD3855-1		
FRACTION: OV	SAMP_DATE	7/1/2010			7/1/2010			6/28/2010			6/30/2010		
MEDIA: WATER	QC_TYPE	NM			NM			NM			NM		
	UNITS	UG/L			UG/L			UG/L			UG/L		
	PCT_SOLIDS	0.0			0.0			0.0			0.0		
	DUP_OF												
PARAMETER		RESULT	VQL	QLCD	RESULT	VQL	QLCD	RESULT	VQL	QLCD	RESULT	VQL	QLCD
CARBON TETRACHLORIDE		0.5	U		0.5	U		1.1			0.5	U	
CHLOROBENZENE		0.5	U		0.5	U		0.5	U		0.5	U	
CHLORODIBROMOMETHANE		0.5	U		0.5	U		0.5	U		0.5	U	
CHLOROETHANE		1	U		1	U		1	U		1	U	
CHLOROFORM		0.4	J	P	0.37	J	P	0.33	U	B	0.5	U	
CHLOROMETHANE		1	U		1	U		1	U		1	U	
CIS-1,2-DICHLOROETHENE		0.5	U		0.5	U		0.78	J	P	0.41	J	P
CIS-1,3-DICHLOROPROPENE		0.5	U		0.5	U		0.5	U		0.5	U	
DIBROMOMETHANE		0.5	U		0.5	U		0.5	U		0.5	U	
DICHLORODIFLUOROMETHANE		1	U		1	U		1	U		1	U	
ETHYLBENZENE		0.5	U		0.5	U		0.5	U		0.5	U	
HEXACHLOROBUTADIENE		0.5	U		0.5	U		0.5	U		0.5	U	
ISOPROPYLBENZENE		0.5	U		0.5	U		0.5	U		0.5	U	
M+P-XYLENES		1	U		1	U		1	U		1	U	
METHYL TERT-BUTYL ETHER		0.5	U		0.5	U		0.5	U		0.5	U	
METHYLENE CHLORIDE		2.5	U		2.5	U		2.5	U		2.5	U	
N-BUTYLBENZENE		0.5	U		0.5	U		0.5	U		0.5	U	
N-PROPYLBENZENE		0.5	U		0.5	U		0.5	U		0.5	U	
O-XYLENE		0.5	U		0.5	U		0.5	U		0.5	U	
SEC-BUTYLBENZENE		0.5	U		0.5	U		0.5	U		0.5	U	
STYRENE		0.5	U		0.5	U		0.5	U		0.5	U	
TERT-BUTYLBENZENE		0.5	U		0.5	U		0.5	U		0.5	U	
TETRACHLOROETHENE		0.5	U		0.5	U		0.67	J	P	0.5	U	
TOLUENE		0.5	U		0.5	U		0.5	U		0.5	U	
TRANS-1,2-DICHLOROETHENE		0.5	U		0.5	U		0.5	U		0.5	U	
TRANS-1,3-DICHLOROPROPENE		0.5	U		0.5	U		0.5	U		0.5	U	
TRICHLOROETHENE		0.5	U		0.5	U		100	J	G	0.5	U	
TRICHLOROFLUOROMETHANE		1	U		1	U		1	U		1	U	
VINYL CHLORIDE		1	U		1	U		1	U		1	U	

PROJ_NO: 02124 SDG: WE19-3 FRACTION: OV MEDIA: WATER	NSAMPLE	DA-MW-08A-062910			DA-MW-09B-062910			DA-MW-103B-070110			DA-MW-105B-062810		
	LAB_ID	SD3822-2			SD3822-1			SD3897-1			SD3782-1		
	SAMP_DATE	6/29/2010			6/29/2010			7/1/2010			6/28/2010		
	QC_TYPE	NM			NM			NM			NM		
	UNITS	UG/L			UG/L			UG/L			UG/L		
	PCT_SOLIDS	0.0			0.0			0.0			0.0		
	DUP_OF												
PARAMETER		RESULT	VQL	QLCD	RESULT	VQL	QLCD	RESULT	VQL	QLCD	RESULT	VQL	QLCD
CARBON TETRACHLORIDE		0.5	U		0.5	U		0.5	U		0.5	U	
CHLOROBENZENE		0.5	U		0.5	U		0.5	U		0.5	U	
CHLORODIBROMOMETHANE		0.5	U		0.5	U		0.5	U		0.5	U	
CHLOROETHANE		1	U		24			1.9	J	P	1	U	
CHLOROFORM		0.5	U		0.5	U		0.5	U		0.5	U	
CHLOROMETHANE		0.37	J	P	1	U		1	U		1	U	
CIS-1,2-DICHLOROETHENE		0.5	U		0.5	U		21			3.8		
CIS-1,3-DICHLOROPROPENE		0.5	U		0.5	UJ	D	0.5	U		0.5	U	
DIBROMOMETHANE		0.5	U		0.5	U		0.5	U		0.5	U	
DICHLORODIFLUOROMETHANE		1	U		1	U		1	U		1	U	
ETHYLBENZENE		0.5	U		0.5	U		0.5	U		0.5	U	
HEXACHLOROBUTADIENE		0.5	U		0.5	U		0.5	U		0.5	U	
ISOPROPYLBENZENE		0.5	U		0.5	U		0.5	U		0.5	U	
M+P-XYLENES		1	U		1	UJ	D	1	U		1	U	
METHYL TERT-BUTYL ETHER		0.5	U		0.5	U		0.5	U		0.5	U	
METHYLENE CHLORIDE		2.5	U		2.5	U		2.5	U		2.5	U	
N-BUTYLBENZENE		0.5	U		0.5	U		0.5	U		0.5	U	
N-PROPYLBENZENE		0.5	U		0.5	U		0.5	U		0.5	U	
O-XYLENE		0.5	U		0.5	UJ	D	0.5	U		0.5	U	
SEC-BUTYLBENZENE		0.5	U		0.5	U		0.5	U		0.5	U	
STYRENE		0.5	U		0.5	UJ	D	0.5	U		0.5	U	
TERT-BUTYLBENZENE		0.5	U		0.5	U		0.5	U		0.5	U	
TETRACHLOROETHENE		0.5	U		0.5	U		0.5	U		2.6		
TOLUENE		0.5	U		0.5	U		0.5	U		0.5	U	
TRANS-1,2-DICHLOROETHENE		0.5	U		0.5	U		0.5	U		0.5	U	
TRANS-1,3-DICHLOROPROPENE		0.5	U		0.5	UJ	D	0.5	U		0.5	U	
TRICHLOROETHENE		0.5	U		1.2			15			2.4		
TRICHLOROFLUOROMETHANE		1	U		1	U		1	U		1	U	
VINYL CHLORIDE		1	U		0.37	J	P	3.7			0.64	J	P

PROJ_NO: 02124	NSAMPLE	DA-MW-11-062910			DA-MW-12-063010			DA-MW-122-063010			DA-MW-13B-063010		
SDG: WE19-3	LAB_ID	SD3822-3			SD3855-4			SD3855-2			SD3855-3		
FRACTION: OV	SAMP_DATE	6/29/2010			6/30/2010			6/30/2010			6/30/2010		
MEDIA: WATER	QC_TYPE	NM			NM			NM			NM		
	UNITS	UG/L			UG/L			UG/L			UG/L		
	PCT_SOLIDS	0.0			0.0			0.0			0.0		
	DUP_OF												
PARAMETER		RESULT	VQL	QLCD	RESULT	VQL	QLCD	RESULT	VQL	QLCD	RESULT	VQL	QLCD
CARBON TETRACHLORIDE		0.5	U		0.5	U		0.5	U		0.5	U	
CHLOROBENZENE		0.5	U		0.5	U		0.5	U		0.5	U	
CHLORODIBROMOMETHANE		0.5	U		0.5	U		0.5	U		0.5	U	
CHLOROETHANE		1	U		1	U		1	U		1	U	
CHLOROFORM		0.5	U		0.5	U		0.5	U		0.5	U	
CHLOROMETHANE		1	U		1	U		1	U		1	U	
CIS-1,2-DICHLOROETHENE		0.5	U		0.23	J	P	0.53	J	P	0.51	J	P
CIS-1,3-DICHLOROPROPENE		0.5	U		0.5	U		0.5	U		0.5	U	
DIBROMOMETHANE		0.5	U		0.5	U		0.5	U		0.5	U	
DICHLORODIFLUOROMETHANE		1	U		1	U		1	U		1	U	
ETHYLBENZENE		0.5	U		0.5	U		0.5	U		0.5	U	
HEXACHLOROBUTADIENE		0.5	U		0.5	U		0.5	U		0.5	U	
ISOPROPYLBENZENE		0.5	U		0.5	U		0.5	U		0.5	U	
M+P-XYLENES		1	U		1	U		1	U		1	U	
METHYL TERT-BUTYL ETHER		0.5	U		0.5	U		0.5	U		0.5	U	
METHYLENE CHLORIDE		2.5	U		2.5	U		2.5	U		2.5	U	
N-BUTYLBENZENE		0.5	U		0.5	U		0.5	U		0.5	U	
N-PROPYLBENZENE		0.5	U		0.5	U		0.5	U		0.5	U	
O-XYLENE		0.5	U		0.5	U		0.5	U		0.5	U	
SEC-BUTYLBENZENE		0.5	U		0.5	U		0.5	U		0.5	U	
STYRENE		0.5	U		0.5	U		0.5	U		0.5	U	
TERT-BUTYLBENZENE		0.5	U		0.5	U		0.5	U		0.5	U	
TETRACHLOROETHENE		0.5	U		4.5			0.58	J	P	1.1		
TOLUENE		0.5	U		0.5	U		0.5	U		0.5	U	
TRANS-1,2-DICHLOROETHENE		0.5	U		0.5	U		0.5	U		0.5	U	
TRANS-1,3-DICHLOROPROPENE		0.5	U		0.5	U		0.5	U		0.5	U	
TRICHLOROETHENE		0.5	U		1.1			0.57	J	P	0.37	J	P
TRICHLOROFLUOROMETHANE		1	U		1	U		1	U		1	U	
VINYL CHLORIDE		1	U		1	U		1	U		1	U	

PROJ_NO: 02124	NSAMPLE	DA-MW-DUP01-062810			DA-MW-DUP01-062810DL			DA-MW-DUP02-062910			DA-TB05-062810		
SDG: WE19-3	LAB_ID	SD3782-3			SD3782-3DL			SD3822-4			SD3782-4		
FRACTION: OV	SAMP_DATE	6/28/2010			6/28/2010			6/29/2010			6/10/2010		
MEDIA: WATER	QC_TYPE	NM			NM			NM			NM		
	UNITS	UG/L			UG/L			UG/L			UG/L		
	PCT_SOLIDS	0.0			0.0			0.0			0.0		
	DUP_OF	DA-MW-03B-062810						DA-MW-11-062910					
PARAMETER		RESULT	VQL	QLCD	RESULT	VQL	QLCD	RESULT	VQL	QLCD	RESULT	VQL	QLCD
CARBON TETRACHLORIDE		2.6						0.5	U		0.5	UJ	H
CHLOROBENZENE		0.5	U					0.5	U		0.5	UJ	H
CHLORODIBROMOMETHANE		0.5	U					0.5	U		0.5	UJ	H
CHLOROETHANE		1	U					1	U		1	UJ	H
CHLOROFORM		0.65	U	B				0.5	U		0.5	UJ	H
CHLOROMETHANE		1	U					1	U		1	UJ	H
CIS-1,2-DICHLOROETHENE		1.6						0.5	U		0.5	UJ	H
CIS-1,3-DICHLOROPROPENE		0.5	U					0.5	U		0.5	UJ	H
DIBROMOMETHANE		0.5	U					0.5	U		0.5	UJ	H
DICHLORODIFLUOROMETHANE		1	U					1	U		1	UJ	H
ETHYLBENZENE		0.5	U					0.5	U		0.5	UJ	H
HEXACHLOROBUTADIENE		0.5	U					0.5	U		0.5	UJ	H
ISOPROPYLBENZENE		0.5	U					0.5	U		0.5	UJ	H
M+P-XYLENES		1	U					1	U		1	UJ	H
METHYL TERT-BUTYL ETHER		0.5	U					0.5	U		0.5	UJ	H
METHYLENE CHLORIDE		2.5	U					2.5	U		2.5	UJ	H
N-BUTYLBENZENE		0.5	U					0.5	U		0.5	UJ	H
N-PROPYLBENZENE		0.5	U					0.5	U		0.5	UJ	H
O-XYLENE		0.5	U					0.5	U		0.5	UJ	H
SEC-BUTYLBENZENE		0.5	U					0.5	U		0.5	UJ	H
STYRENE		0.5	U					0.5	U		0.5	UJ	H
TERT-BUTYLBENZENE		0.5	U					0.5	U		0.5	UJ	H
TETRACHLOROETHENE		1.3	U	A				0.5	U		0.5	UJ	H
TOLUENE		0.5	U					0.5	U		0.5	UJ	H
TRANS-1,2-DICHLOROETHENE		0.5	U					0.5	U		0.5	UJ	H
TRANS-1,3-DICHLOROPROPENE		0.5	U					0.5	U		0.5	UJ	H
TRICHLOROETHENE					200	J	G	0.5	U		0.5	UJ	H
TRICHLOROFLUOROMETHANE		1	U					1	U		1	UJ	H
VINYL CHLORIDE		1	U					1	U		1	UJ	H

PROJ_NO: 02124 SDG: WE19-3 FRACTION: OV MEDIA: WATER	NSAMPLE	DA-TB06-062910			DA-TB07-063010		
	LAB_ID	SD3822-5			SD3855-5		
	SAMP_DATE	6/29/2010			6/30/2010		
	QC_TYPE	NM			NM		
	UNITS	UG/L			UG/L		
	PCT_SOLIDS	0.0			0.0		
	DUP_OF						
PARAMETER		RESULT	VQL	QLCD	RESULT	VQL	QLCD
CARBON TETRACHLORIDE		0.5	U		0.5	U	
CHLOROBENZENE		0.5	U		0.5	U	
CHLORODIBROMOMETHANE		0.5	U		0.5	U	
CHLOROETHANE		1	U		1	U	
CHLOROFORM		0.5	U		0.5	U	
CHLOROMETHANE		1	U		1	U	
CIS-1,2-DICHLOROETHENE		0.5	U		0.5	U	
CIS-1,3-DICHLOROPROPENE		0.5	U		0.5	U	
DIBROMOMETHANE		0.5	U		0.5	U	
DICHLORODIFLUOROMETHANE		1	U		1	U	
ETHYLBENZENE		0.5	U		0.5	U	
HEXACHLOROBUTADIENE		0.5	U		0.5	U	
ISOPROPYLBENZENE		0.5	U		0.5	U	
M+P-XYLENES		1	U		1	U	
METHYL TERT-BUTYL ETHER		0.5	U		0.5	U	
METHYLENE CHLORIDE		2.5	U		2.5	U	
N-BUTYLBENZENE		0.5	U		0.5	U	
N-PROPYLBENZENE		0.5	U		0.5	U	
O-XYLENE		0.5	U		0.5	U	
SEC-BUTYLBENZENE		0.5	U		0.5	U	
STYRENE		0.5	U		0.5	U	
TERT-BUTYLBENZENE		0.5	U		0.5	U	
TETRACHLOROETHENE		0.5	U		0.5	U	
TOLUENE		0.5	U		0.5	U	
TRANS-1,2-DICHLOROETHENE		0.5	U		0.5	U	
TRANS-1,3-DICHLOROPROPENE		0.5	U		0.5	U	
TRICHLOROETHENE		0.5	U		0.5	U	
TRICHLOROFLUOROMETHANE		1	U		1	U	
VINYL CHLORIDE		1	U		1	U	

PROJ_NO: 02124	NSAMPLE	DA-FB01-070110			DA-GW-RB01-070110			DA-MW-03B-062810			DA-MW-04B-063010		
SDG: WE19-3	LAB_ID	SD3897-3			SD3897-2			SD3782-2			SD3855-1		
FRACTION: PAH	SAMP_DATE	7/1/2010			7/1/2010			6/28/2010			6/30/2010		
MEDIA: WATER	QC_TYPE	NM			NM			NM			NM		
	UNITS	UG/L			UG/L			UG/L			UG/L		
	PCT_SOLIDS	0.0			0.0			0.0			0.0		
	DUP_OF												
PARAMETER		RESULT	VQL	QLCD	RESULT	VQL	QLCD	RESULT	VQL	QLCD	RESULT	VQL	QLCD
1,4-DIOXANE		0.094	J	P	0.48	U		0.088	U	B	0.19	U	B

PROJ_NO: 02124	NSAMPLE	DA-MW-09B-062910			DA-MW-103B-070110			DA-MW-105B-062810			DA-MW-11-062910		
SDG: WE19-3	LAB_ID	SD3822-1DL			SD3897-1			SD3782-1			SD3822-3		
FRACTION: PAH	SAMP_DATE	6/29/2010			7/1/2010			6/28/2010			6/29/2010		
MEDIA: WATER	QC_TYPE	NM			NM			NM			NM		
	UNITS	UG/L			UG/L			UG/L			UG/L		
	PCT_SOLIDS	0.0			0.0			0.0			0.0		
	DUP_OF												
PARAMETER		RESULT	VQL	QLCD	RESULT	VQL	QLCD	RESULT	VQL	QLCD	RESULT	VQL	QLCD
1,4-DIOXANE		8.3			3.2			1	J	P	0.48	U	

PROJ_NO: 02124	NSAMPLE	DA-MW-12-063010			DA-MW-122-063010			DA-MW-13B-063010			DA-MW-DUP01-062810		
SDG: WE19-3	LAB_ID	SD3855-4			SD3855-2			SD3855-3			SD3782-3		
FRACTION: PAH	SAMP_DATE	6/30/2010			6/30/2010			6/30/2010			6/28/2010		
MEDIA: WATER	QC_TYPE	NM			NM			NM			NM		
	UNITS	UG/L			UG/L			UG/L			UG/L		
	PCT_SOLIDS	0.0			0.0			0.0			0.0		
	DUP_OF										DA-MW-03B-062810		
PARAMETER		RESULT	VQL	QLCD	RESULT	VQL	QLCD	RESULT	VQL	QLCD	RESULT	VQL	QLCD
1,4-DIOXANE		0.48	U		0.48	U		0.48	U		0.12	U	B

PROJ_NO: 02124	NSAMPLE	DA-MW-DUP02-062910		
SDG: WE19-3	LAB_ID	SD3822-4		
FRACTION: PAH	SAMP_DATE	6/29/2010		
MEDIA: WATER	QC_TYPE	NM		
	UNITS	UG/L		
	PCT_SOLIDS	0.0		
	DUP_OF	DA-MW-11-062910		
PARAMETER		RESULT	VQL	QLCD
1,4-DIOXANE		0.47	U	

PROJ_NO: 02124	NSAMPLE	DA-MW-03B-062810			DA-MW-09B-062910			DA-MW-09B-062910DL			DA-MW-103B-070110		
SDG: WE19-3	LAB_ID	SD3782-2			SD3822-1			SD3822-1DL			SD3897-1		
FRACTION: OVG	SAMP_DATE	6/28/2010			6/29/2010			6/29/2010			7/1/2010		
MEDIA: WATER	QC_TYPE	NM			NM			NM			NM		
	UNITS	UG/L			UG/L			UG/L			UG/L		
	PCT_SOLIDS	0.0			0.0			0.0			0.0		
	DUP_OF												
PARAMETER		RESULT	VQL	QLCD	RESULT	VQL	QLCD	RESULT	VQL	QLCD	RESULT	VQL	QLCD
ETHANE		2	U		3.5	J	P				2	U	
ETHENE		2	U		2	U					2	U	
METHANE		1.8	J	CP				6000	J	C	73	J	C

PROJ_NO: 02124	NSAMPLE	DA-MW-105B-062810			DA-MW-11-062910			DA-MW-12-063010			DA-MW-DUP01-062810		
SDG: WE19-3	LAB_ID	SD3782-1			SD3822-3			SD3855-4			SD3782-3		
FRACTION: OVG	SAMP_DATE	6/28/2010			6/29/2010			6/30/2010			6/28/2010		
MEDIA: WATER	QC_TYPE	NM			NM			NM			NM		
	UNITS	UG/L			UG/L			UG/L			UG/L		
	PCT_SOLIDS	0.0			0.0			0.0			0.0		
	DUP_OF										DA-MW-03B-062810		
PARAMETER		RESULT	VQL	QLCD	RESULT	VQL	QLCD	RESULT	VQL	QLCD	RESULT	VQL	QLCD
ETHANE		2	U		2	U		2	U		2	U	
ETHENE		2	U		2	U		2	U		2	U	
METHANE		110	J	C	87	J	C	5.9	J	CP	1.4	J	CP

PROJ_NO: 02124	NSAMPLE	DA-MW-DUP02-062910		
SDG: WE19-3	LAB_ID	SD3822-4		
FRACTION: OVG	SAMP_DATE	6/29/2010		
MEDIA: WATER	QC_TYPE	NM		
	UNITS	UG/L		
	PCT_SOLIDS	0.0		
	DUP_OF	DA-MW-11-062910		
PARAMETER		RESULT	VQL	QLCD
ETHANE		2	U	
ETHENE		2	U	
METHANE		80	J	C

PROJ_NO: 02124	NSAMPLE	DA-GW-RB01-070110			DA-MW-03B-062810			DA-MW-09B-062910					
SDG: WE19-3	LAB_ID	SD3897-2			SD3782-2			SD3822-1					
FRACTION: MISC	SAMP_DATE	7/1/2010			6/28/2010			6/29/2010					
MEDIA: WATER	QC_TYPE	NM			NM			NM					
	UNITS	UG/L			MG/L			MG/L			UG/L		
	PCT_SOLIDS	0.0			0.0			0.0			0.0		
	DUP_OF												
PARAMETER		RESULT	VQL	QLCD	RESULT	VQL	QLCD	RESULT	VQL	QLCD	RESULT	VQL	QLCD
AMMONIA-N					0.05	U		4.9					
CYANIDE		5	U								5.6	J	P
NITRATE-N					0.69			0.018	J	P			
NITRITE-N					0.025	U		0.025	U				
ORTHOPHOSPHATE-P					0.05	U		0.05	U				
SULFATE					21			1.1					
SULFIDE					2.5			0.8	U				
TOTAL ORGANIC CARBON					2.1			2.8					

PROJ_NO: 02124	NSAMPLE	DA-MW-103B-070110						DA-MW-105B-062810			DA-MW-11-062910		
SDG: WE19-3	LAB_ID	SD3897-1						SD3782-1			SD3822-3		
FRACTION: MISC	SAMP_DATE	7/1/2010						6/28/2010			6/29/2010		
MEDIA: WATER	QC_TYPE	NM						NM			NM		
	UNITS	MG/L			UG/L			MG/L			MG/L		
	PCT_SOLIDS	0.0			0.0			0.0			0.0		
	DUP_OF												
PARAMETER		RESULT	VQL	QLCD	RESULT	VQL	QLCD	RESULT	VQL	QLCD	RESULT	VQL	QLCD
AMMONIA-N		0.05	U					0.05	U		0.04	J	P
CYANIDE					5	U							
NITRATE-N		0.07						0.099			0.026	J	P
NITRITE-N		0.025	U					0.025	U		0.025	U	
ORTHOPHOSPHATE-P		0.05	U					0.05	U		0.05	U	
SULFATE		8.1						28			21		
SULFIDE		0.8	U					0.7	J	P	0.8	U	
TOTAL ORGANIC CARBON		1.1						0.76	J	P	1.2		

PROJ_NO: 02124	NSAMPLE	DA-MW-11-062910			DA-MW-12-063010						DA-MW-13B-063010		
SDG: WE19-3	LAB_ID	SD3822-3			SD3855-4						SD3855-3		
FRACTION: MISC	SAMP_DATE	6/29/2010			6/30/2010						6/30/2010		
MEDIA: WATER	QC_TYPE	NM			NM						NM		
	UNITS	UG/L			MG/L			UG/L			UG/L		
	PCT_SOLIDS	0.0			0.0			0.0			0.0		
	DUP_OF												
PARAMETER		RESULT	VQL	QLCD	RESULT	VQL	QLCD	RESULT	VQL	QLCD	RESULT	VQL	QLCD
AMMONIA-N					0.05	U							
CYANIDE		5	U					5	U		5	U	
NITRATE-N					3.4								
NITRITE-N					0.025	U							
ORTHOPHOSPHATE-P					0.05	U							
SULFATE					23								
SULFIDE					0.73	J	P						
TOTAL ORGANIC CARBON					1								

PROJ_NO: 02124	NSAMPLE	DA-MW-DUP01-062810			DA-MW-DUP02-062910					
SDG: WE19-3	LAB_ID	SD3782-3			SD3822-4					
FRACTION: MISC	SAMP_DATE	6/28/2010			6/29/2010					
MEDIA: WATER	QC_TYPE	NM			NM					
	UNITS	MG/L			MG/L			UG/L		
	PCT_SOLIDS	0.0			0.0			0.0		
	DUP_OF	DA-MW-03B-062810								
PARAMETER		RESULT	VQL	QLCD	RESULT	VQL	QLCD	RESULT	VQL	QLCD
AMMONIA-N		0.05	U		0.038	J	P			
CYANIDE								5	U	
NITRATE-N		0.7			0.025	U				
NITRITE-N		0.025	U		0.025	U				
ORTHOPHOSPHATE-P		0.05	U		0.05	U				
SULFATE		21			19					
SULFIDE		0.8	U		0.8	U				
TOTAL ORGANIC CARBON		1.3			1					

APPENDIX B

RESULTS AS REPORTED BY THE LABORATORY

Katahdin
ANALYTICAL SERVICES

Cert No E87604

Report of Analytical Results

Client: Tetra Tech NUS, Inc.
Lab ID: SD3897-3
Client ID: DA-FB01-070110
Project: CTO WE19 NS Newport, SW
SDG: WE19-3

Sample Date: 01-JUL-10
Received Date: 02-JUL-10
Extract Date: 13-JUL-10
Extracted By: HCG
Extraction Method:
Lab Prep Batch: WG79634

Analysis Date: 13-JUL-10
Analyst: HCG
Analysis Method: SW846 8260B
Matrix: AQ
% Solids: NA
Report Date: 21-JUL-10

Compound	Qualifier	Result	Units	Dilution	LOQ	ADJ LOQ	ADJ MDL	ADJ LOD
Dichlorodifluoromethane	U	1.0	ug/L	1	2	2.0	0.24	1.0
Chloromethane	U	1.0	ug/L	1	2	2.0	0.36	1.0
Vinyl Chloride	U	1.0	ug/L	1	2	2.0	0.25	1.0
Bromomethane	U	1.0	ug/L	1	2	2.0	0.49	1.0
Chloroethane	U	1.0	ug/L	1	2	2.0	0.55	1.0
Trichlorofluoromethane	U	1.0	ug/L	1	2	2.0	0.24	1.0
1,1-Dichloroethene	U	0.50	ug/L	1	1	1.0	0.35	0.50
Carbon Disulfide	U	0.50	ug/L	1	1	1.0	0.25	0.50
Methylene Chloride	U	2.5	ug/L	1	5	5.0	1.1	2.5
Acetone		49.	ug/L	1	5	5.0	2.2	2.5
trans-1,2-Dichloroethene	U	0.50	ug/L	1	1	1.0	0.25	0.50
Methyl tert-butyl Ether	U	0.50	ug/L	1	1	1.0	0.36	0.50
1,1-Dichloroethane	U	0.50	ug/L	1	1	1.0	0.21	0.50
cis-1,2-Dichloroethene	U	0.50	ug/L	1	1	1.0	0.21	0.50
2,2-Dichloropropane	U	0.50	ug/L	1	1	1.0	0.25	0.50
Bromochloromethane	U	0.50	ug/L	1	1	1.0	0.21	0.50
Chloroform	J	0.40	ug/L	1	1	1.0	0.32	0.50
Carbon Tetrachloride	U	0.50	ug/L	1	1	1.0	0.22	0.50
1,1,1-Trichloroethane	U	0.50	ug/L	1	1	1.0	0.20	0.50
1,1-Dichloropropene	U	0.50	ug/L	1	1	1.0	0.21	0.50
2-Butanone	J	3.7	ug/L	1	5	5.0	1.3	2.5
Benzene	U	0.50	ug/L	1	1	1.0	0.26	0.50
1,2-Dichloroethane	U	0.50	ug/L	1	1	1.0	0.20	0.50
Trichloroethene	U	0.50	ug/L	1	1	1.0	0.28	0.50
Dibromomethane	U	0.50	ug/L	1	1	1.0	0.46	0.50
1,2-Dichloropropane	U	0.50	ug/L	1	1	1.0	0.25	0.50
Bromodichloromethane	U	0.50	ug/L	1	1	1.0	0.33	0.50
cis-1,3-Dichloropropene	U	0.50	ug/L	1	1	1.0	0.19	0.50
Toluene	U	0.50	ug/L	1	1	1.0	0.27	0.50
4-Methyl-2-Pentanone	U	2.5	ug/L	1	5	5.0	1.3	2.5
Tetrachloroethene	U	0.50	ug/L	1	1	1.0	0.40	0.50
trans-1,3-Dichloropropene	U	0.50	ug/L	1	1	1.0	0.20	0.50
1,1,2-Trichloroethane	U	0.50	ug/L	1	1	1.0	0.33	0.50
Dibromochloromethane	U	0.50	ug/L	1	1	1.0	0.30	0.50
1,3-Dichloropropane	U	0.50	ug/L	1	1	1.0	0.22	0.50

600 Technology Way
P.O. Box 540, Scarborough, ME 04070
Tel:(207) 874-2400 Fax:(207) 775-4029

Report of Analytical Results

Client: Tetra Tech NUS, Inc.
Lab ID: SD3897-3
Client ID: DA-FB01-070110
Project: CTO WE19 NS Newport, SW
SDG: WE19-3

Sample Date: 01-JUL-10
Received Date: 02-JUL-10
Extract Date: 13-JUL-10
Extracted By: HCG
Extraction Method:
Lab Prep Batch: WG79634

Analysis Date: 13-JUL-10
Analyst: HCG
Analysis Method: SW846 8260B
Matrix: AQ
% Solids: NA
Report Date: 21-JUL-10

Compound	Qualifier	Result	Units	Dilution	LOQ	ADJ LOQ	ADJ MDL	ADJ LOD
1,2-Dibromoethane	U	0.50	ug/L	1	1	1.0	0.22	0.50
2-Hexanone	U	2.5	ug/L	1	5	5.0	1.7	2.5
Chlorobenzene	U	0.50	ug/L	1	1	1.0	0.22	0.50
Ethylbenzene	U	0.50	ug/L	1	1	1.0	0.21	0.50
1,1,1,2-Tetrachloroethane	U	0.50	ug/L	1	1	1.0	0.19	0.50
m+p-Xylenes	U	1.0	ug/L	1	2	2.0	0.59	1.0
o-Xylene	U	0.50	ug/L	1	1	1.0	0.25	0.50
Styrene	U	0.50	ug/L	1	1	1.0	0.23	0.50
Bromoform	U	0.50	ug/L	1	1	1.0	0.23	0.50
Isopropylbenzene	U	0.50	ug/L	1	1	1.0	0.23	0.50
Bromobenzene	U	0.50	ug/L	1	1	1.0	0.24	0.50
N-Propylbenzene	U	0.50	ug/L	1	1	1.0	0.26	0.50
1,1,2,2-Tetrachloroethane	U	0.50	ug/L	1	1	1.0	0.38	0.50
1,3,5-Trimethylbenzene	U	0.50	ug/L	1	1	1.0	0.20	0.50
2-Chlorotoluene	U	0.50	ug/L	1	1	1.0	0.20	0.50
1,2,3-Trichloropropane	U	0.50	ug/L	1	1	1.0	0.19	0.50
4-Chlorotoluene	U	0.50	ug/L	1	1	1.0	0.26	0.50
tert-Butylbenzene	U	0.50	ug/L	1	1	1.0	0.31	0.50
1,2,4-Trimethylbenzene	U	0.50	ug/L	1	1	1.0	0.19	0.50
P-Isopropyltoluene	U	0.50	ug/L	1	1	1.0	0.25	0.50
1,3-Dichlorobenzene	U	0.50	ug/L	1	1	1.0	0.26	0.50
1,4-Dichlorobenzene	U	0.50	ug/L	1	1	1.0	0.24	0.50
N-Butylbenzene	U	0.50	ug/L	1	1	1.0	0.23	0.50
sec-Butylbenzene	U	0.50	ug/L	1	1	1.0	0.21	0.50
1,2-Dichlorobenzene	U	0.50	ug/L	1	1	1.0	0.15	0.50
1,2-Dibromo-3-Chloropropane	U	0.75	ug/L	1	1	1.0	0.50	0.75
Hexachlorobutadiene	U	0.50	ug/L	1	1	1.0	0.52	0.50
1,2,4-Trichlorobenzene	U	0.50	ug/L	1	1	1.0	0.37	0.50
1,2,3-Trichlorobenzene	U	0.50	ug/L	1	1	1.0	0.20	0.50
P-Bromofluorobenzene		107.	%					
Toluene-d8		111.	%					
1,2-Dichloroethane-d4		109.	%					
Dibromofluoromethane		113.	%					

600 Technology Way
P.O. Box 540, Scarborough, ME 04070
Tel:(207) 874-2400 Fax:(207) 775-4029

http://www.katahdinlab.com

Katahdin
ANALYTICAL SERVICES

Cert No E87604

Report of Analytical Results

Client: Tetra Tech NUS, Inc.
Lab ID: SD3897-2
Client ID: DA-GW-RB01-070110
Project: CTO WE19 NS Newport, SW
SDG: WE19-3

Sample Date: 01-JUL-10
Received Date: 02-JUL-10
Extract Date: 13-JUL-10
Extracted By: HCG
Extraction Method:
Lab Prep Batch: WG79634

Analysis Date: 13-JUL-10
Analyst: HCG
Analysis Method: SW846 8260B
Matrix: AQ
% Solids: NA
Report Date: 20-JUL-10

Compound	Qualifier	Result	Units	Dilution	LOQ	ADJ LOQ	ADJ MDL	ADJ LOD
Dichlorodifluoromethane	U	1.0	ug/L	1	2	2.0	0.24	1.0
Chloromethane	U	1.0	ug/L	1	2	2.0	0.36	1.0
Vinyl Chloride	U	1.0	ug/L	1	2	2.0	0.25	1.0
Bromomethane	U	1.0	ug/L	1	2	2.0	0.49	1.0
Chloroethane	U	1.0	ug/L	1	2	2.0	0.55	1.0
Trichlorofluoromethane	U	1.0	ug/L	1	2	2.0	0.24	1.0
1,1-Dichloroethene	U	0.50	ug/L	1	1	1.0	0.35	0.50
Carbon Disulfide	U	0.50	ug/L	1	1	1.0	0.25	0.50
Methylene Chloride	U	2.5	ug/L	1	5	5.0	1.1	2.5
Acetone		40.	ug/L	1	5	5.0	2.2	2.5
trans-1,2-Dichloroethene	U	0.50	ug/L	1	1	1.0	0.25	0.50
Methyl tert-butyl Ether	U	0.50	ug/L	1	1	1.0	0.36	0.50
1,1-Dichloroethane	U	0.50	ug/L	1	1	1.0	0.21	0.50
cis-1,2-Dichloroethene	U	0.50	ug/L	1	1	1.0	0.21	0.50
2,2-Dichloropropane	U	0.50	ug/L	1	1	1.0	0.25	0.50
Bromochloromethane	U	0.50	ug/L	1	1	1.0	0.21	0.50
Chloroform	J	0.37	ug/L	1	1	1.0	0.32	0.50
Carbon Tetrachloride	U	0.50	ug/L	1	1	1.0	0.22	0.50
1,1,1-Trichloroethane	U	0.50	ug/L	1	1	1.0	0.20	0.50
1,1-Dichloropropene	U	0.50	ug/L	1	1	1.0	0.21	0.50
2-Butanone	J	2.4	ug/L	1	5	5.0	1.3	2.5
Benzene	U	0.50	ug/L	1	1	1.0	0.26	0.50
1,2-Dichloroethane	U	0.50	ug/L	1	1	1.0	0.20	0.50
Trichloroethene	U	0.50	ug/L	1	1	1.0	0.28	0.50
Dibromomethane	U	0.50	ug/L	1	1	1.0	0.46	0.50
1,2-Dichloropropane	U	0.50	ug/L	1	1	1.0	0.25	0.50
Bromodichloromethane	U	0.50	ug/L	1	1	1.0	0.33	0.50
cis-1,3-Dichloropropene	U	0.50	ug/L	1	1	1.0	0.19	0.50
Toluene	U	0.50	ug/L	1	1	1.0	0.27	0.50
4-Methyl-2-Pentanone	U	2.5	ug/L	1	5	5.0	1.3	2.5
Tetrachloroethene	U	0.50	ug/L	1	1	1.0	0.40	0.50
trans-1,3-Dichloropropene	U	0.50	ug/L	1	1	1.0	0.20	0.50
1,1,2-Trichloroethane	U	0.50	ug/L	1	1	1.0	0.33	0.50
Dibromochloromethane	U	0.50	ug/L	1	1	1.0	0.30	0.50
1,3-Dichloropropane	U	0.50	ug/L	1	1	1.0	0.22	0.50

600 Technology Way
P.O. Box 540, Scarborough, ME 04070
Tel:(207) 874-2400 Fax:(207) 775-4029

Report of Analytical Results

Client: Tetra Tech NUS, Inc.
Lab ID: SD3897-2
Client ID: DA-GW-RB01-070110
Project: CTO WE19 NS Newport, SW
SDG: WE19-3

Sample Date: 01-JUL-10
Received Date: 02-JUL-10
Extract Date: 13-JUL-10
Extracted By: HCG
Extraction Method:
Lab Prep Batch: WG79634

Analysis Date: 13-JUL-10
Analyst: HCG
Analysis Method: SW846 8260B
Matrix: AQ
% Solids: NA
Report Date: 20-JUL-10

Compound	Qualifier	Result	Units	Dilution	LOQ	ADJ LOQ	ADJ MDL	ADJ LOD
1,2-Dibromoethane	U	0.50	ug/L	1	1	1.0	0.22	0.50
2-Hexanone	U	2.5	ug/L	1	5	5.0	1.7	2.5
Chlorobenzene	U	0.50	ug/L	1	1	1.0	0.22	0.50
Ethylbenzene	U	0.50	ug/L	1	1	1.0	0.21	0.50
1,1,1,2-Tetrachloroethane	U	0.50	ug/L	1	1	1.0	0.19	0.50
m+p-Xylenes	U	1.0	ug/L	1	2	2.0	0.59	1.0
o-Xylene	U	0.50	ug/L	1	1	1.0	0.25	0.50
Styrene	U	0.50	ug/L	1	1	1.0	0.23	0.50
Bromoform	U	0.50	ug/L	1	1	1.0	0.23	0.50
Isopropylbenzene	U	0.50	ug/L	1	1	1.0	0.23	0.50
Bromobenzene	U	0.50	ug/L	1	1	1.0	0.24	0.50
N-Propylbenzene	U	0.50	ug/L	1	1	1.0	0.26	0.50
1,1,2,2-Tetrachloroethane	U	0.50	ug/L	1	1	1.0	0.38	0.50
1,3,5-Trimethylbenzene	U	0.50	ug/L	1	1	1.0	0.20	0.50
2-Chlorotoluene	U	0.50	ug/L	1	1	1.0	0.20	0.50
1,2,3-Trichloropropane	U	0.50	ug/L	1	1	1.0	0.19	0.50
4-Chlorotoluene	U	0.50	ug/L	1	1	1.0	0.26	0.50
tert-Butylbenzene	U	0.50	ug/L	1	1	1.0	0.31	0.50
1,2,4-Trimethylbenzene	U	0.50	ug/L	1	1	1.0	0.19	0.50
P-Isopropyltoluene	U	0.50	ug/L	1	1	1.0	0.25	0.50
1,3-Dichlorobenzene	U	0.50	ug/L	1	1	1.0	0.26	0.50
1,4-Dichlorobenzene	U	0.50	ug/L	1	1	1.0	0.24	0.50
N-Butylbenzene	U	0.50	ug/L	1	1	1.0	0.23	0.50
sec-Butylbenzene	U	0.50	ug/L	1	1	1.0	0.21	0.50
1,2-Dichlorobenzene	U	0.50	ug/L	1	1	1.0	0.15	0.50
1,2-Dibromo-3-Chloropropane	U	0.75	ug/L	1	1	1.0	0.50	0.75
Hexachlorobutadiene	U	0.50	ug/L	1	1	1.0	0.52	0.50
1,2,4-Trichlorobenzene	U	0.50	ug/L	1	1	1.0	0.37	0.50
1,2,3-Trichlorobenzene	U	0.50	ug/L	1	1	1.0	0.20	0.50
P-Bromofluorobenzene		105.	%					
Toluene-d8		110.	%					
1,2-Dichloroethane-d4		105.	%					
Dibromofluoromethane		110.	%					

600 Technology Way
P.O. Box 540, Scarborough, ME 04070
Tel:(207) 874-2400 Fax:(207) 775-4029

http://www.katahdinlab.com

Katahdin
ANALYTICAL SERVICES

Cert No E87604

Report of Analytical Results

Client: Tetra Tech NUS, Inc.
Lab ID: SD3782-2
Client ID: DA-MW-03B-062810
Project: CTO WE19 NS Newport, SW
SDG: WE19-3

Sample Date: 28-JUN-10
Received Date: 29-JUN-10
Extract Date: 06-JUL-10
Extracted By: HCG
Extraction Method:
Lab Prep Batch: WG79391

Analysis Date: 06-JUL-10
Analyst: HCG
Analysis Method: SW846 8260B
Matrix: AQ
% Solids: NA
Report Date: 20-JUL-10

Compound	Qualifier	Result	Units	Dilution	LOQ	ADJ LOQ	ADJ MDL	ADJ LOD
Dichlorodifluoromethane	U	1.0	ug/L	1	2	2.0	0.24	1.0
Chloromethane	U	1.0	ug/L	1	2	2.0	0.36	1.0
Vinyl Chloride	U	1.0	ug/L	1	2	2.0	0.25	1.0
Bromomethane	U	1.0	ug/L	1	2	2.0	0.49	1.0
Chloroethane	U	1.0	ug/L	1	2	2.0	0.55	1.0
Trichlorofluoromethane	U	1.0	ug/L	1	2	2.0	0.24	1.0
1,1-Dichloroethene	U	0.50	ug/L	1	1	1.0	0.35	0.50
Carbon Disulfide	U	0.50	ug/L	1	1	1.0	0.25	0.50
Methylene Chloride	U	2.5	ug/L	1	5	5.0	1.1	2.5
Acetone	U	2.5	ug/L	1	5	5.0	2.2	2.5
trans-1,2-Dichloroethene	U	0.50	ug/L	1	1	1.0	0.25	0.50
Methyl tert-butyl Ether	U	0.50	ug/L	1	1	1.0	0.36	0.50
1,1-Dichloroethane		2.1	ug/L	1	1	1.0	0.21	0.50
cis-1,2-Dichloroethene	J	0.78	ug/L	1	1	1.0	0.21	0.50
2,2-Dichloropropane	U	0.50	ug/L	1	1	1.0	0.25	0.50
Bromochloromethane	U	0.50	ug/L	1	1	1.0	0.21	0.50
Chloroform	J	0.33	ug/L	1	1	1.0	0.32	0.50
Carbon Tetrachloride		1.1	ug/L	1	1	1.0	0.22	0.50
1,1,1-Trichloroethane		1.2	ug/L	1	1	1.0	0.20	0.50
1,1-Dichloropropene	U	0.50	ug/L	1	1	1.0	0.21	0.50
2-Butanone	U	2.5	ug/L	1	5	5.0	1.3	2.5
Benzene	U	0.50	ug/L	1	1	1.0	0.26	0.50
1,2-Dichloroethane	U	0.50	ug/L	1	1	1.0	0.20	0.50
Trichloroethene		100	ug/L	1	1	1.0	0.28	0.50
Dibromomethane	U	0.50	ug/L	1	1	1.0	0.46	0.50
1,2-Dichloropropane	U	0.50	ug/L	1	1	1.0	0.25	0.50
Bromodichloromethane	U	0.50	ug/L	1	1	1.0	0.33	0.50
cis-1,3-Dichloropropene	U	0.50	ug/L	1	1	1.0	0.19	0.50
Toluene	U	0.50	ug/L	1	1	1.0	0.27	0.50
4-Methyl-2-Pentanone	U	2.5	ug/L	1	5	5.0	1.3	2.5
Tetrachloroethene	J	0.67	ug/L	1	1	1.0	0.40	0.50
trans-1,3-Dichloropropene	U	0.50	ug/L	1	1	1.0	0.20	0.50
1,1,2-Trichloroethane	U	0.50	ug/L	1	1	1.0	0.33	0.50
Dibromochloromethane	U	0.50	ug/L	1	1	1.0	0.30	0.50
1,3-Dichloropropane	U	0.50	ug/L	1	1	1.0	0.22	0.50

600 Technology Way
P.O. Box 540, Scarborough, ME 04070
Tel:(207) 874-2400 Fax:(207) 775-4029

http://www.katahdinlab.com

Report of Analytical Results

Client: Tetra Tech NUS, Inc.
Lab ID: SD3782-2
Client ID: DA-MW-03B-062810
Project: CTO WE19 NS Newport, SW
SDG: WE19-3

Sample Date: 28-JUN-10
Received Date: 29-JUN-10
Extract Date: 06-JUL-10
Extracted By: HCG
Extraction Method:
Lab Prep Batch: WG79391

Analysis Date: 06-JUL-10
Analyst: HCG
Analysis Method: SW846 8260B
Matrix: AQ
% Solids: NA
Report Date: 20-JUL-10

Compound	Qualifier	Result	Units	Dilution	LOQ	ADJ LOQ	ADJ MDL	ADJ LOD
1,2-Dibromoethane	U	0.50	ug/L	1	1	1.0	0.22	0.50
2-Hexanone	U	2.5	ug/L	1	5	5.0	1.7	2.5
Chlorobenzene	U	0.50	ug/L	1	1	1.0	0.22	0.50
Ethylbenzene	U	0.50	ug/L	1	1	1.0	0.21	0.50
1,1,1,2-Tetrachloroethane	U	0.50	ug/L	1	1	1.0	0.19	0.50
m+p-Xylenes	U	1.0	ug/L	1	2	2.0	0.59	1.0
o-Xylene	U	0.50	ug/L	1	1	1.0	0.25	0.50
Styrene	U	0.50	ug/L	1	1	1.0	0.23	0.50
Bromoform	U	0.50	ug/L	1	1	1.0	0.23	0.50
Isopropylbenzene	U	0.50	ug/L	1	1	1.0	0.23	0.50
Bromobenzene	U	0.50	ug/L	1	1	1.0	0.24	0.50
N-Propylbenzene	U	0.50	ug/L	1	1	1.0	0.26	0.50
1,1,2,2-Tetrachloroethane	U	0.50	ug/L	1	1	1.0	0.38	0.50
1,3,5-Trimethylbenzene	U	0.50	ug/L	1	1	1.0	0.20	0.50
2-Chlorotoluene	U	0.50	ug/L	1	1	1.0	0.20	0.50
1,2,3-Trichloropropane	U	0.50	ug/L	1	1	1.0	0.19	0.50
4-Chlorotoluene	U	0.50	ug/L	1	1	1.0	0.26	0.50
tert-Butylbenzene	U	0.50	ug/L	1	1	1.0	0.31	0.50
1,2,4-Trimethylbenzene	U	0.50	ug/L	1	1	1.0	0.19	0.50
P-Isopropyltoluene	U	0.50	ug/L	1	1	1.0	0.25	0.50
1,3-Dichlorobenzene	U	0.50	ug/L	1	1	1.0	0.26	0.50
1,4-Dichlorobenzene	U	0.50	ug/L	1	1	1.0	0.24	0.50
N-Butylbenzene	U	0.50	ug/L	1	1	1.0	0.23	0.50
sec-Butylbenzene	U	0.50	ug/L	1	1	1.0	0.21	0.50
1,2-Dichlorobenzene	U	0.50	ug/L	1	1	1.0	0.15	0.50
1,2-Dibromo-3-Chloropropane	U	0.75	ug/L	1	1	1.0	0.50	0.75
Hexachlorobutadiene	U	0.50	ug/L	1	1	1.0	0.52	0.50
1,2,4-Trichlorobenzene	U	0.50	ug/L	1	1	1.0	0.37	0.50
1,2,3-Trichlorobenzene	U	0.50	ug/L	1	1	1.0	0.20	0.50
P-Bromofluorobenzene		107.	%					
Toluene-d8		112.	%					
1,2-Dichloroethane-d4		107.	%					
Dibromofluoromethane		107.	%					

600 Technology Way
P.O. Box 540, Scarborough, ME 04070
Tel:(207) 874-2400 Fax:(207) 775-4029

Katahdin
ANALYTICAL SERVICES

Accredited in accordance with nelac
Cert No E87604

Report of Analytical Results

Client: Tetra Tech NUS, Inc.
Lab ID: SD3855-1
Client ID: DA-MW-04B-063010
Project: CTO WE19 NS Newport, SW
SDG: WE19-3

Sample Date: 30-JUN-10
Received Date: 01-JUL-10
Extract Date: 09-JUL-10
Extracted By: HCG
Extraction Method:
Lab Prep Batch: WG79497

Analysis Date: 09-JUL-10
Analyst: HCG
Analysis Method: SW846 8260B
Matrix: AQ
% Solids: NA
Report Date: 20-JUL-10

Compound	Qualifier	Result	Units	Dilution	LOQ	ADJ LOQ	ADJ MDL	ADJ LOD
Dichlorodifluoromethane	U	1.0	ug/L	1	2	2.0	0.24	1.0
Chloromethane	U	1.0	ug/L	1	2	2.0	0.36	1.0
Vinyl Chloride	U	1.0	ug/L	1	2	2.0	0.25	1.0
Bromomethane	U	1.0	ug/L	1	2	2.0	0.49	1.0
Chloroethane	U	1.0	ug/L	1	2	2.0	0.55	1.0
Trichlorofluoromethane	U	1.0	ug/L	1	2	2.0	0.24	1.0
1,1-Dichloroethene	J	0.77	ug/L	1	1	1.0	0.35	0.50
Carbon Disulfide	U	0.50	ug/L	1	1	1.0	0.25	0.50
Methylene Chloride	U	2.5	ug/L	1	5	5.0	1.1	2.5
Acetone	J	4.4	ug/L	1	5	5.0	2.2	2.5
trans-1,2-Dichloroethene	U	0.50	ug/L	1	1	1.0	0.25	0.50
Methyl tert-butyl Ether	U	0.50	ug/L	1	1	1.0	0.36	0.50
1,1-Dichloroethane		24.	ug/L	1	1	1.0	0.21	0.50
cis-1,2-Dichloroethene	J	0.41	ug/L	1	1	1.0	0.21	0.50
2,2-Dichloropropane	U	0.50	ug/L	1	1	1.0	0.25	0.50
Bromochloromethane	U	0.50	ug/L	1	1	1.0	0.21	0.50
Chloroform	U	0.50	ug/L	1	1	1.0	0.32	0.50
Carbon Tetrachloride	U	0.50	ug/L	1	1	1.0	0.22	0.50
1,1,1-Trichloroethane	J	0.29	ug/L	1	1	1.0	0.20	0.50
1,1-Dichloropropene	U	0.50	ug/L	1	1	1.0	0.21	0.50
2-Butanone	U	2.5	ug/L	1	5	5.0	1.3	2.5
Benzene	U	0.50	ug/L	1	1	1.0	0.26	0.50
1,2-Dichloroethane	U	0.50	ug/L	1	1	1.0	0.20	0.50
Trichloroethene	U	0.50	ug/L	1	1	1.0	0.28	0.50
Dibromomethane	U	0.50	ug/L	1	1	1.0	0.46	0.50
1,2-Dichloropropane	U	0.50	ug/L	1	1	1.0	0.25	0.50
Bromodichloromethane	U	0.50	ug/L	1	1	1.0	0.33	0.50
cis-1,3-Dichloropropene	U	0.50	ug/L	1	1	1.0	0.19	0.50
Toluene	U	0.50	ug/L	1	1	1.0	0.27	0.50
4-Methyl-2-Pentanone	U	2.5	ug/L	1	5	5.0	1.3	2.5
Tetrachloroethene	U	0.50	ug/L	1	1	1.0	0.40	0.50
trans-1,3-Dichloropropene	U	0.50	ug/L	1	1	1.0	0.20	0.50
1,1,2-Trichloroethane	U	0.50	ug/L	1	1	1.0	0.33	0.50
Dibromochloromethane	U	0.50	ug/L	1	1	1.0	0.30	0.50
1,3-Dichloropropane	U	0.50	ug/L	1	1	1.0	0.22	0.50

600 Technology Way
P.O. Box 540, Scarborough, ME 04070
Tel:(207) 874-2400 Fax:(207) 775-4029

Report of Analytical Results

Client: Tetra Tech NUS, Inc.
Lab ID: SD3855-1
Client ID: DA-MW-04B-063010
Project: CTO WE19 NS Newport, SW
SDG: WE19-3

Sample Date: 30-JUN-10
Received Date: 01-JUL-10
Extract Date: 09-JUL-10
Extracted By: HCG
Extraction Method:
Lab Prep Batch: WG79497

Analysis Date: 09-JUL-10
Analyst: HCG
Analysis Method: SW846 8260B
Matrix: AQ
% Solids: NA
Report Date: 20-JUL-10

Compound	Qualifier	Result	Units	Dilution	LOQ	ADJ LOQ	ADJ MDL	ADJ LOD
1,2-Dibromoethane	U	0.50	ug/L	1	1	1.0	0.22	0.50
2-Hexanone	U	2.5	ug/L	1	5	5.0	1.7	2.5
Chlorobenzene	U	0.50	ug/L	1	1	1.0	0.22	0.50
Ethylbenzene	U	0.50	ug/L	1	1	1.0	0.21	0.50
1,1,1,2-Tetrachloroethane	U	0.50	ug/L	1	1	1.0	0.19	0.50
m+p-Xylenes	U	1.0	ug/L	1	2	2.0	0.59	1.0
o-Xylene	U	0.50	ug/L	1	1	1.0	0.25	0.50
Styrene	U	0.50	ug/L	1	1	1.0	0.23	0.50
Bromoform	U	0.50	ug/L	1	1	1.0	0.23	0.50
Isopropylbenzene	U	0.50	ug/L	1	1	1.0	0.23	0.50
Bromobenzene	U	0.50	ug/L	1	1	1.0	0.24	0.50
N-Propylbenzene	U	0.50	ug/L	1	1	1.0	0.26	0.50
1,1,2,2-Tetrachloroethane	U	0.50	ug/L	1	1	1.0	0.38	0.50
1,3,5-Trimethylbenzene	U	0.50	ug/L	1	1	1.0	0.20	0.50
2-Chlorotoluene	U	0.50	ug/L	1	1	1.0	0.20	0.50
1,2,3-Trichloropropane	U	0.50	ug/L	1	1	1.0	0.19	0.50
4-Chlorotoluene	U	0.50	ug/L	1	1	1.0	0.26	0.50
tert-Butylbenzene	U	0.50	ug/L	1	1	1.0	0.31	0.50
1,2,4-Trimethylbenzene	U	0.50	ug/L	1	1	1.0	0.19	0.50
P-Isopropyltoluene	U	0.50	ug/L	1	1	1.0	0.25	0.50
1,3-Dichlorobenzene	U	0.50	ug/L	1	1	1.0	0.26	0.50
1,4-Dichlorobenzene	U	0.50	ug/L	1	1	1.0	0.24	0.50
N-Butylbenzene	U	0.50	ug/L	1	1	1.0	0.23	0.50
sec-Butylbenzene	U	0.50	ug/L	1	1	1.0	0.21	0.50
1,2-Dichlorobenzene	U	0.50	ug/L	1	1	1.0	0.15	0.50
1,2-Dibromo-3-Chloropropane	U	0.75	ug/L	1	1	1.0	0.50	0.75
Hexachlorobutadiene	U	0.50	ug/L	1	1	1.0	0.52	0.50
1,2,4-Trichlorobenzene	U	0.50	ug/L	1	1	1.0	0.37	0.50
1,2,3-Trichlorobenzene	U	0.50	ug/L	1	1	1.0	0.20	0.50
P-Bromofluorobenzene		72.0	%					
Toluene-d8		95.2	%					
1,2-Dichloroethane-d4		116.	%					
Dibromofluoromethane		107.	%					

600 Technology Way
P.O. Box 540, Scarborough, ME 04070
Tel:(207) 874-2400 Fax:(207) 775-4029

http://www.katahdinlab.com

Report of Analytical Results

Client: Tetra Tech NUS, Inc.
Lab ID: SD3822-2
Client ID: DA-MW-08A-062910
Project: CTO WE19 NS Newport, SW
SDG: WE19-3

Sample Date: 29-JUN-10
Received Date: 30-JUN-10
Extract Date: 09-JUL-10
Extracted By: HCG
Extraction Method:
Lab Prep Batch: WG79497

Analysis Date: 09-JUL-10
Analyst: HCG
Analysis Method: SW846 8260B
Matrix: AQ
% Solids: NA
Report Date: 20-JUL-10

Compound	Qualifier	Result	Units	Dilution	LOQ	ADJ LOQ	ADJ MDL	ADJ LOD
Dichlorodifluoromethane	U	1.0	ug/L	1	2	2.0	0.24	1.0
Chloromethane	J	0.37	ug/L	1	2	2.0	0.36	1.0
Vinyl Chloride	U	1.0	ug/L	1	2	2.0	0.25	1.0
Bromomethane	U	1.0	ug/L	1	2	2.0	0.49	1.0
Chloroethane	U	1.0	ug/L	1	2	2.0	0.55	1.0
Trichlorofluoromethane	U	1.0	ug/L	1	2	2.0	0.24	1.0
1,1-Dichloroethene	U	0.50	ug/L	1	1	1.0	0.35	0.50
Carbon Disulfide	U	0.50	ug/L	1	1	1.0	0.25	0.50
Methylene Chloride	U	2.5	ug/L	1	5	5.0	1.1	2.5
Acetone	U	2.5	ug/L	1	5	5.0	2.2	2.5
trans-1,2-Dichloroethene	U	0.50	ug/L	1	1	1.0	0.25	0.50
Methyl tert-butyl Ether	U	0.50	ug/L	1	1	1.0	0.36	0.50
1,1-Dichloroethane	U	0.50	ug/L	1	1	1.0	0.21	0.50
cis-1,2-Dichloroethene	U	0.50	ug/L	1	1	1.0	0.21	0.50
2,2-Dichloropropane	U	0.50	ug/L	1	1	1.0	0.25	0.50
Bromochloromethane	U	0.50	ug/L	1	1	1.0	0.21	0.50
Chloroform	U	0.50	ug/L	1	1	1.0	0.32	0.50
Carbon Tetrachloride	U	0.50	ug/L	1	1	1.0	0.22	0.50
1,1,1-Trichloroethane	U	0.50	ug/L	1	1	1.0	0.20	0.50
1,1-Dichloropropene	U	0.50	ug/L	1	1	1.0	0.21	0.50
2-Butanone	U	2.5	ug/L	1	5	5.0	1.3	2.5
Benzene	U	0.50	ug/L	1	1	1.0	0.26	0.50
1,2-Dichloroethane	U	0.50	ug/L	1	1	1.0	0.20	0.50
Trichloroethene	U	0.50	ug/L	1	1	1.0	0.28	0.50
Dibromomethane	U	0.50	ug/L	1	1	1.0	0.46	0.50
1,2-Dichloropropane	U	0.50	ug/L	1	1	1.0	0.25	0.50
Bromodichloromethane	U	0.50	ug/L	1	1	1.0	0.33	0.50
cis-1,3-Dichloropropene	U	0.50	ug/L	1	1	1.0	0.19	0.50
Toluene	U	0.50	ug/L	1	1	1.0	0.27	0.50
4-Methyl-2-Pentanone	U	2.5	ug/L	1	5	5.0	1.3	2.5
Tetrachloroethene	U	0.50	ug/L	1	1	1.0	0.40	0.50
trans-1,3-Dichloropropene	U	0.50	ug/L	1	1	1.0	0.20	0.50
1,1,2-Trichloroethane	U	0.50	ug/L	1	1	1.0	0.33	0.50
Dibromochloromethane	U	0.50	ug/L	1	1	1.0	0.30	0.50
1,3-Dichloropropane	U	0.50	ug/L	1	1	1.0	0.22	0.50

600 Technology Way
P.O. Box 540, Scarborough, ME 04070
Tel:(207) 874-2400 Fax:(207) 775-4029

Report of Analytical Results

Client: Tetra Tech NUS, Inc.
Lab ID: SD3822-2
Client ID: DA-MW-08A-062910
Project: CTO WE19 NS Newport, SW
SDG: WE19-3

Sample Date: 29-JUN-10
Received Date: 30-JUN-10
Extract Date: 09-JUL-10
Extracted By: HCG
Extraction Method:
Lab Prep Batch: WG79497

Analysis Date: 09-JUL-10
Analyst: HCG
Analysis Method: SW846 8260B
Matrix: AQ
% Solids: NA
Report Date: 20-JUL-10

Compound	Qualifier	Result	Units	Dilution	LOQ	ADJ LOQ	ADJ MDL	ADJ LOD
1,2-Dibromoethane	U	0.50	ug/L	1	1	1.0	0.22	0.50
2-Hexanone	U	2.5	ug/L	1	5	5.0	1.7	2.5
Chlorobenzene	U	0.50	ug/L	1	1	1.0	0.22	0.50
Ethylbenzene	U	0.50	ug/L	1	1	1.0	0.21	0.50
1,1,1,2-Tetrachloroethane	U	0.50	ug/L	1	1	1.0	0.19	0.50
m+p-Xylenes	U	1.0	ug/L	1	2	2.0	0.59	1.0
o-Xylene	U	0.50	ug/L	1	1	1.0	0.25	0.50
Styrene	U	0.50	ug/L	1	1	1.0	0.23	0.50
Bromoform	U	0.50	ug/L	1	1	1.0	0.23	0.50
Isopropylbenzene	U	0.50	ug/L	1	1	1.0	0.23	0.50
Bromobenzene	U	0.50	ug/L	1	1	1.0	0.24	0.50
N-Propylbenzene	U	0.50	ug/L	1	1	1.0	0.26	0.50
1,1,2,2-Tetrachloroethane	U	0.50	ug/L	1	1	1.0	0.38	0.50
1,3,5-Trimethylbenzene	U	0.50	ug/L	1	1	1.0	0.20	0.50
2-Chlorotoluene	U	0.50	ug/L	1	1	1.0	0.20	0.50
1,2,3-Trichloropropane	U	0.50	ug/L	1	1	1.0	0.19	0.50
4-Chlorotoluene	U	0.50	ug/L	1	1	1.0	0.26	0.50
tert-Butylbenzene	U	0.50	ug/L	1	1	1.0	0.31	0.50
1,2,4-Trimethylbenzene	U	0.50	ug/L	1	1	1.0	0.19	0.50
P-Isopropyltoluene	U	0.50	ug/L	1	1	1.0	0.25	0.50
1,3-Dichlorobenzene	U	0.50	ug/L	1	1	1.0	0.26	0.50
1,4-Dichlorobenzene	U	0.50	ug/L	1	1	1.0	0.24	0.50
N-Butylbenzene	U	0.50	ug/L	1	1	1.0	0.23	0.50
sec-Butylbenzene	U	0.50	ug/L	1	1	1.0	0.21	0.50
1,2-Dichlorobenzene	U	0.50	ug/L	1	1	1.0	0.15	0.50
1,2-Dibromo-3-Chloropropane	U	0.75	ug/L	1	1	1.0	0.50	0.75
Hexachlorobutadiene	U	0.50	ug/L	1	1	1.0	0.52	0.50
1,2,4-Trichlorobenzene	U	0.50	ug/L	1	1	1.0	0.37	0.50
1,2,3-Trichlorobenzene	U	0.50	ug/L	1	1	1.0	0.20	0.50
P-Bromofluorobenzene		71.4	%					
Toluene-d8		94.0	%					
1,2-Dichloroethane-d4		110.	%					
Dibromofluoromethane		107.	%					

600 Technology Way
P.O. Box 540, Scarborough, ME 04070
Tel:(207) 874-2400 Fax:(207) 775-4029

Katahdin
ANALYTICAL SERVICES

Cert No E87604

Report of Analytical Results

Client: Tetra Tech NUS, Inc.
Lab ID: SD3822-1
Client ID: DA-MW-09B-062910
Project: CTO WE19 NS Newport, SW
SDG: WE19-3

Sample Date: 29-JUN-10
Received Date: 30-JUN-10
Extract Date: 09-JUL-10
Extracted By: HCG
Extraction Method:
Lab Prep Batch: WG79497

Analysis Date: 09-JUL-10
Analyst: HCG
Analysis Method: SW846 8260B
Matrix: AQ
% Solids: NA
Report Date: 20-JUL-10

Compound	Qualifier	Result	Units	Dilution	LOQ	ADJ LOQ	ADJ MDL	ADJ LOD
Dichlorodifluoromethane	U	1.0	ug/L	1	2	2.0	0.24	1.0
Chloromethane	U	1.0	ug/L	1	2	2.0	0.36	1.0
Vinyl Chloride	J	0.37	ug/L	1	2	2.0	0.25	1.0
Bromomethane	U	1.0	ug/L	1	2	2.0	0.49	1.0
Chloroethane		24.	ug/L	1	2	2.0	0.55	1.0
Trichlorofluoromethane	U	1.0	ug/L	1	2	2.0	0.24	1.0
1,1-Dichloroethene		18.	ug/L	1	1	1.0	0.35	0.50
Carbon Disulfide	U	0.50	ug/L	1	1	1.0	0.25	0.50
Methylene Chloride	U	2.5	ug/L	1	5	5.0	1.1	2.5
Acetone		27.	ug/L	1	5	5.0	2.2	2.5
trans-1,2-Dichloroethene	U	0.50	ug/L	1	1	1.0	0.25	0.50
Methyl tert-butyl Ether	U	0.50	ug/L	1	1	1.0	0.36	0.50
1,1-Dichloroethane		82.	ug/L	1	1	1.0	0.21	0.50
cis-1,2-Dichloroethene	U	0.50	ug/L	1	1	1.0	0.21	0.50
2,2-Dichloropropane	U	0.50	ug/L	1	1	1.0	0.25	0.50
Bromochloromethane	U	0.50	ug/L	1	1	1.0	0.21	0.50
Chloroform	U	0.50	ug/L	1	1	1.0	0.32	0.50
Carbon Tetrachloride	U	0.50	ug/L	1	1	1.0	0.22	0.50
1,1,1-Trichloroethane		41.	ug/L	1	1	1.0	0.20	0.50
1,1-Dichloropropene	U	0.50	ug/L	1	1	1.0	0.21	0.50
2-Butanone		12.	ug/L	1	5	5.0	1.3	2.5
Benzene	U	0.50	ug/L	1	1	1.0	0.26	0.50
1,2-Dichloroethane	U	0.50	ug/L	1	1	1.0	0.20	0.50
Trichloroethene		1.2	ug/L	1	1	1.0	0.28	0.50
Dibromomethane	U	0.50	ug/L	1	1	1.0	0.46	0.50
1,2-Dichloropropane	U	0.50	ug/L	1	1	1.0	0.25	0.50
Bromodichloromethane	U	0.50	ug/L	1	1	1.0	0.33	0.50
cis-1,3-Dichloropropene	U	0.50	ug/L	1	1	1.0	0.19	0.50
Toluene	U	0.50	ug/L	1	1	1.0	0.27	0.50
4-Methyl-2-Pentanone	U	2.5	ug/L	1	5	5.0	1.3	2.5
Tetrachloroethene	U	0.50	ug/L	1	1	1.0	0.40	0.50
trans-1,3-Dichloropropene	U	0.50	ug/L	1	1	1.0	0.20	0.50
1,1,2-Trichloroethane	U	0.50	ug/L	1	1	1.0	0.33	0.50
Dibromochloromethane	U	0.50	ug/L	1	1	1.0	0.30	0.50
1,3-Dichloropropane	U	0.50	ug/L	1	1	1.0	0.22	0.50

600 Technology Way
P.O. Box 540, Scarborough, ME 04070
Tel:(207) 874-2400 Fax:(207) 775-4029

http://www.katahdinlab.com

Report of Analytical Results

Client: Tetra Tech NUS, Inc.
Lab ID: SD3822-1
Client ID: DA-MW-09B-062910
Project: CTO WE19 NS Newport, SW
SDG: WE19-3

Sample Date: 29-JUN-10
Received Date: 30-JUN-10
Extract Date: 09-JUL-10
Extracted By: HCG
Extraction Method:
Lab Prep Batch: WG79497

Analysis Date: 09-JUL-10
Analyst: HCG
Analysis Method: SW846 8260B
Matrix: AQ
% Solids: NA
Report Date: 20-JUL-10

Compound	Qualifier	Result	Units	Dilution	LOQ	ADJ LOQ	ADJ MDL	ADJ LOD
1,2-Dibromoethane	U	0.50	ug/L	1	1	1.0	0.22	0.50
2-Hexanone	U	2.5	ug/L	1	5	5.0	1.7	2.5
Chlorobenzene	U	0.50	ug/L	1	1	1.0	0.22	0.50
Ethylbenzene	U	0.50	ug/L	1	1	1.0	0.21	0.50
1,1,1,2-Tetrachloroethane	U	0.50	ug/L	1	1	1.0	0.19	0.50
m+p-Xylenes	U	1.0	ug/L	1	2	2.0	0.59	1.0
o-Xylene	U	0.50	ug/L	1	1	1.0	0.25	0.50
Styrene	U	0.50	ug/L	1	1	1.0	0.23	0.50
Bromoform	U	0.50	ug/L	1	1	1.0	0.23	0.50
Isopropylbenzene	U	0.50	ug/L	1	1	1.0	0.23	0.50
Bromobenzene	U	0.50	ug/L	1	1	1.0	0.24	0.50
N-Propylbenzene	U	0.50	ug/L	1	1	1.0	0.26	0.50
1,1,2,2-Tetrachloroethane	U	0.50	ug/L	1	1	1.0	0.38	0.50
1,3,5-Trimethylbenzene	U	0.50	ug/L	1	1	1.0	0.20	0.50
2-Chlorotoluene	U	0.50	ug/L	1	1	1.0	0.20	0.50
1,2,3-Trichloropropane	U	0.50	ug/L	1	1	1.0	0.19	0.50
4-Chlorotoluene	U	0.50	ug/L	1	1	1.0	0.26	0.50
tert-Butylbenzene	U	0.50	ug/L	1	1	1.0	0.31	0.50
1,2,4-Trimethylbenzene	U	0.50	ug/L	1	1	1.0	0.19	0.50
P-Isopropyltoluene	U	0.50	ug/L	1	1	1.0	0.25	0.50
1,3-Dichlorobenzene	U	0.50	ug/L	1	1	1.0	0.26	0.50
1,4-Dichlorobenzene	U	0.50	ug/L	1	1	1.0	0.24	0.50
N-Butylbenzene	U	0.50	ug/L	1	1	1.0	0.23	0.50
sec-Butylbenzene	U	0.50	ug/L	1	1	1.0	0.21	0.50
1,2-Dichlorobenzene	U	0.50	ug/L	1	1	1.0	0.15	0.50
1,2-Dibromo-3-Chloropropane	U	0.75	ug/L	1	1	1.0	0.50	0.75
Hexachlorobutadiene	U	0.50	ug/L	1	1	1.0	0.52	0.50
1,2,4-Trichlorobenzene	U	0.50	ug/L	1	1	1.0	0.37	0.50
1,2,3-Trichlorobenzene	U	0.50	ug/L	1	1	1.0	0.20	0.50
P-Bromofluorobenzene		72.2	%					
Toluene-d8		90.2	%					
1,2-Dichloroethane-d4		110.	%					
Dibromofluoromethane		103.	%					

600 Technology Way
P.O. Box 540, Scarborough, ME 04070
Tel:(207) 874-2400 Fax:(207) 775-4029

http://www.katahdinlab.com

Report of Analytical Results

Client: Tetra Tech NUS, Inc.
Lab ID: SD3897-1
Client ID: DA-MW-103B-070110
Project: CTO WE19 NS Newport, SW
SDG: WE19-3

Sample Date: 01-JUL-10
Received Date: 02-JUL-10
Extract Date: 13-JUL-10
Extracted By: HCG
Extraction Method:
Lab Prep Batch: WG79634

Analysis Date: 13-JUL-10
Analyst: HCG
Analysis Method: SW846 8260B
Matrix: AQ
% Solids: NA
Report Date: 20-JUL-10

Compound	Qualifier	Result	Units	Dilution	LOQ	ADJ LOQ	ADJ MDL	ADJ LOD
Dichlorodifluoromethane	U	1.0	ug/L	1	2	2.0	0.24	1.0
Chloromethane	U	1.0	ug/L	1	2	2.0	0.36	1.0
Vinyl Chloride		3.7	ug/L	1	2	2.0	0.25	1.0
Bromomethane	U	1.0	ug/L	1	2	2.0	0.49	1.0
Chloroethane	J	1.9	ug/L	1	2	2.0	0.55	1.0
Trichlorofluoromethane	U	1.0	ug/L	1	2	2.0	0.24	1.0
1,1-Dichloroethene		12.	ug/L	1	1	1.0	0.35	0.50
Carbon Disulfide	U	0.50	ug/L	1	1	1.0	0.25	0.50
Methylene Chloride	U	2.5	ug/L	1	5	5.0	1.1	2.5
Acetone	U	2.5	ug/L	1	5	5.0	2.2	2.5
trans-1,2-Dichloroethene	U	0.50	ug/L	1	1	1.0	0.25	0.50
Methyl tert-butyl Ether	U	0.50	ug/L	1	1	1.0	0.36	0.50
1,1-Dichloroethane		160	ug/L	1	1	1.0	0.21	0.50
cis-1,2-Dichloroethene		21.	ug/L	1	1	1.0	0.21	0.50
2,2-Dichloropropane	U	0.50	ug/L	1	1	1.0	0.25	0.50
Bromochloromethane	U	0.50	ug/L	1	1	1.0	0.21	0.50
Chloroform	U	0.50	ug/L	1	1	1.0	0.32	0.50
Carbon Tetrachloride	U	0.50	ug/L	1	1	1.0	0.22	0.50
1,1,1-Trichloroethane		7.9	ug/L	1	1	1.0	0.20	0.50
1,1-Dichloropropene	U	0.50	ug/L	1	1	1.0	0.21	0.50
2-Butanone	U	2.5	ug/L	1	5	5.0	1.3	2.5
Benzene	U	0.50	ug/L	1	1	1.0	0.26	0.50
1,2-Dichloroethane	U	0.50	ug/L	1	1	1.0	0.20	0.50
Trichloroethene		15.	ug/L	1	1	1.0	0.28	0.50
Dibromomethane	U	0.50	ug/L	1	1	1.0	0.46	0.50
1,2-Dichloropropane	U	0.50	ug/L	1	1	1.0	0.25	0.50
Bromodichloromethane	U	0.50	ug/L	1	1	1.0	0.33	0.50
cis-1,3-Dichloropropene	U	0.50	ug/L	1	1	1.0	0.19	0.50
Toluene	U	0.50	ug/L	1	1	1.0	0.27	0.50
4-Methyl-2-Pentanone	U	2.5	ug/L	1	5	5.0	1.3	2.5
Tetrachloroethene	U	0.50	ug/L	1	1	1.0	0.40	0.50
trans-1,3-Dichloropropene	U	0.50	ug/L	1	1	1.0	0.20	0.50
1,1,2-Trichloroethane	U	0.50	ug/L	1	1	1.0	0.33	0.50
Dibromochloromethane	U	0.50	ug/L	1	1	1.0	0.30	0.50
1,3-Dichloropropane	U	0.50	ug/L	1	1	1.0	0.22	0.50

600 Technology Way
P.O. Box 540, Scarborough, ME 04070
Tel:(207) 874-2400 Fax:(207) 775-4029

Report of Analytical Results

Client: Tetra Tech NUS, Inc.
Lab ID: SD3897-1
Client ID: DA-MW-103B-070110
Project: CTO WE19 NS Newport, SW
SDG: WE19-3

Sample Date: 01-JUL-10
Received Date: 02-JUL-10
Extract Date: 13-JUL-10
Extracted By: HCG
Extraction Method:
Lab Prep Batch: WG79634

Analysis Date: 13-JUL-10
Analyst: HCG
Analysis Method: SW846 8260B
Matrix: AQ
% Solids: NA
Report Date: 20-JUL-10

Compound	Qualifier	Result	Units	Dilution	LOQ	ADJ LOQ	ADJ MDL	ADJ LOD
1,2-Dibromoethane	U	0.50	ug/L	1	1	1.0	0.22	0.50
2-Hexanone	U	2.5	ug/L	1	5	5.0	1.7	2.5
Chlorobenzene	U	0.50	ug/L	1	1	1.0	0.22	0.50
Ethylbenzene	U	0.50	ug/L	1	1	1.0	0.21	0.50
1,1,1,2-Tetrachloroethane	U	0.50	ug/L	1	1	1.0	0.19	0.50
m+p-Xylenes	U	1.0	ug/L	1	2	2.0	0.59	1.0
o-Xylene	U	0.50	ug/L	1	1	1.0	0.25	0.50
Styrene	U	0.50	ug/L	1	1	1.0	0.23	0.50
Bromoform	U	0.50	ug/L	1	1	1.0	0.23	0.50
Isopropylbenzene	U	0.50	ug/L	1	1	1.0	0.23	0.50
Bromobenzene	U	0.50	ug/L	1	1	1.0	0.24	0.50
N-Propylbenzene	U	0.50	ug/L	1	1	1.0	0.26	0.50
1,1,2,2-Tetrachloroethane	U	0.50	ug/L	1	1	1.0	0.38	0.50
1,3,5-Trimethylbenzene	U	0.50	ug/L	1	1	1.0	0.20	0.50
2-Chlorotoluene	U	0.50	ug/L	1	1	1.0	0.20	0.50
1,2,3-Trichloropropane	U	0.50	ug/L	1	1	1.0	0.19	0.50
4-Chlorotoluene	U	0.50	ug/L	1	1	1.0	0.26	0.50
tert-Butylbenzene	U	0.50	ug/L	1	1	1.0	0.31	0.50
1,2,4-Trimethylbenzene	U	0.50	ug/L	1	1	1.0	0.19	0.50
P-Isopropyltoluene	U	0.50	ug/L	1	1	1.0	0.25	0.50
1,3-Dichlorobenzene	U	0.50	ug/L	1	1	1.0	0.26	0.50
1,4-Dichlorobenzene	U	0.50	ug/L	1	1	1.0	0.24	0.50
N-Butylbenzene	U	0.50	ug/L	1	1	1.0	0.23	0.50
sec-Butylbenzene	U	0.50	ug/L	1	1	1.0	0.21	0.50
1,2-Dichlorobenzene	U	0.50	ug/L	1	1	1.0	0.15	0.50
1,2-Dibromo-3-Chloropropane	U	0.75	ug/L	1	1	1.0	0.50	0.75
Hexachlorobutadiene	U	0.50	ug/L	1	1	1.0	0.52	0.50
1,2,4-Trichlorobenzene	U	0.50	ug/L	1	1	1.0	0.37	0.50
1,2,3-Trichlorobenzene	U	0.50	ug/L	1	1	1.0	0.20	0.50
P-Bromofluorobenzene		99.0	%					
Toluene-d8		104.	%					
1,2-Dichloroethane-d4		101.	%					
Dibromofluoromethane		107.	%					

600 Technology Way
P.O. Box 540, Scarborough, ME 04070
Tel:(207) 874-2400 Fax:(207) 775-4029

Report of Analytical Results

Client: Tetra Tech NUS, Inc.
Lab ID: SD3782-1
Client ID: DA-MW-105B-062810
Project: CTO WE19 NS Newport, SW
SDG: WE19-3

Sample Date: 28-JUN-10
Received Date: 29-JUN-10
Extract Date: 06-JUL-10
Extracted By: HCG
Extraction Method:
Lab Prep Batch: WG79391

Analysis Date: 06-JUL-10
Analyst: HCG
Analysis Method: SW846 8260B
Matrix: AQ
% Solids: NA
Report Date: 20-JUL-10

Compound	Qualifier	Result	Units	Dilution	LOQ	ADJ LOQ	ADJ MDL	ADJ LOD
Dichlorodifluoromethane	U	1.0	ug/L	1	2	2.0	0.24	1.0
Chloromethane	U	1.0	ug/L	1	2	2.0	0.36	1.0
Vinyl Chloride	J	0.64	ug/L	1	2	2.0	0.25	1.0
Bromomethane	U	1.0	ug/L	1	2	2.0	0.49	1.0
Chloroethane	U	1.0	ug/L	1	2	2.0	0.55	1.0
Trichlorofluoromethane	U	1.0	ug/L	1	2	2.0	0.24	1.0
1,1-Dichloroethene		7.4	ug/L	1	1	1.0	0.35	0.50
Carbon Disulfide	U	0.50	ug/L	1	1	1.0	0.25	0.50
Methylene Chloride	U	2.5	ug/L	1	5	5.0	1.1	2.5
Acetone	U	2.5	ug/L	1	5	5.0	2.2	2.5
trans-1,2-Dichloroethene	U	0.50	ug/L	1	1	1.0	0.25	0.50
Methyl tert-butyl Ether	U	0.50	ug/L	1	1	1.0	0.36	0.50
1,1-Dichloroethane		110	ug/L	1	1	1.0	0.21	0.50
cis-1,2-Dichloroethene		3.8	ug/L	1	1	1.0	0.21	0.50
2,2-Dichloropropane	U	0.50	ug/L	1	1	1.0	0.25	0.50
Bromochloromethane	U	0.50	ug/L	1	1	1.0	0.21	0.50
Chloroform	U	0.50	ug/L	1	1	1.0	0.32	0.50
Carbon Tetrachloride	U	0.50	ug/L	1	1	1.0	0.22	0.50
1,1,1-Trichloroethane		3.3	ug/L	1	1	1.0	0.20	0.50
1,1-Dichloropropene	U	0.50	ug/L	1	1	1.0	0.21	0.50
2-Butanone	U	2.5	ug/L	1	5	5.0	1.3	2.5
Benzene	U	0.50	ug/L	1	1	1.0	0.26	0.50
1,2-Dichloroethane	U	0.50	ug/L	1	1	1.0	0.20	0.50
Trichloroethene		2.4	ug/L	1	1	1.0	0.28	0.50
Dibromomethane	U	0.50	ug/L	1	1	1.0	0.46	0.50
1,2-Dichloropropane	U	0.50	ug/L	1	1	1.0	0.25	0.50
Bromodichloromethane	U	0.50	ug/L	1	1	1.0	0.33	0.50
cis-1,3-Dichloropropene	U	0.50	ug/L	1	1	1.0	0.19	0.50
Toluene	U	0.50	ug/L	1	1	1.0	0.27	0.50
4-Methyl-2-Pentanone	U	2.5	ug/L	1	5	5.0	1.3	2.5
Tetrachloroethene		2.6	ug/L	1	1	1.0	0.40	0.50
trans-1,3-Dichloropropene	U	0.50	ug/L	1	1	1.0	0.20	0.50
1,1,2-Trichloroethane	U	0.50	ug/L	1	1	1.0	0.33	0.50
Dibromochloromethane	U	0.50	ug/L	1	1	1.0	0.30	0.50
1,3-Dichloropropane	U	0.50	ug/L	1	1	1.0	0.22	0.50

600 Technology Way
P.O. Box 540, Scarborough, ME 04070
Tel:(207) 874-2400 Fax:(207) 775-4029

http://www.katahdinlab.com

Report of Analytical Results

Client: Tetra Tech NUS, Inc.
Lab ID: SD3782-1
Client ID: DA-MW-105B-062810
Project: CTO WE19 NS Newport, SW
SDG: WE19-3

Sample Date: 28-JUN-10
Received Date: 29-JUN-10
Extract Date: 06-JUL-10
Extracted By: HCG
Extraction Method:
Lab Prep Batch: WG79391

Analysis Date: 06-JUL-10
Analyst: HCG
Analysis Method: SW846 8260B
Matrix: AQ
% Solids: NA
Report Date: 20-JUL-10

Compound	Qualifier	Result	Units	Dilution	LOQ	ADJ LOQ	ADJ MDL	ADJ LOD
1,2-Dibromoethane	U	0.50	ug/L	1	1	1.0	0.22	0.50
2-Hexanone	U	2.5	ug/L	1	5	5.0	1.7	2.5
Chlorobenzene	U	0.50	ug/L	1	1	1.0	0.22	0.50
Ethylbenzene	U	0.50	ug/L	1	1	1.0	0.21	0.50
1,1,1,2-Tetrachloroethane	U	0.50	ug/L	1	1	1.0	0.19	0.50
m+p-Xylenes	U	1.0	ug/L	1	2	2.0	0.59	1.0
o-Xylene	U	0.50	ug/L	1	1	1.0	0.25	0.50
Styrene	U	0.50	ug/L	1	1	1.0	0.23	0.50
Bromoform	U	0.50	ug/L	1	1	1.0	0.23	0.50
Isopropylbenzene	U	0.50	ug/L	1	1	1.0	0.23	0.50
Bromobenzene	U	0.50	ug/L	1	1	1.0	0.24	0.50
N-Propylbenzene	U	0.50	ug/L	1	1	1.0	0.26	0.50
1,1,2,2-Tetrachloroethane	U	0.50	ug/L	1	1	1.0	0.38	0.50
1,3,5-Trimethylbenzene	U	0.50	ug/L	1	1	1.0	0.20	0.50
2-Chlorotoluene	U	0.50	ug/L	1	1	1.0	0.20	0.50
1,2,3-Trichloropropane	U	0.50	ug/L	1	1	1.0	0.19	0.50
4-Chlorotoluene	U	0.50	ug/L	1	1	1.0	0.26	0.50
tert-Butylbenzene	U	0.50	ug/L	1	1	1.0	0.31	0.50
1,2,4-Trimethylbenzene	U	0.50	ug/L	1	1	1.0	0.19	0.50
P-Isopropyltoluene	U	0.50	ug/L	1	1	1.0	0.25	0.50
1,3-Dichlorobenzene	U	0.50	ug/L	1	1	1.0	0.26	0.50
1,4-Dichlorobenzene	U	0.50	ug/L	1	1	1.0	0.24	0.50
N-Butylbenzene	U	0.50	ug/L	1	1	1.0	0.23	0.50
sec-Butylbenzene	U	0.50	ug/L	1	1	1.0	0.21	0.50
1,2-Dichlorobenzene	U	0.50	ug/L	1	1	1.0	0.15	0.50
1,2-Dibromo-3-Chloropropane	U	0.75	ug/L	1	1	1.0	0.50	0.75
Hexachlorobutadiene	U	0.50	ug/L	1	1	1.0	0.52	0.50
1,2,4-Trichlorobenzene	U	0.50	ug/L	1	1	1.0	0.37	0.50
1,2,3-Trichlorobenzene	U	0.50	ug/L	1	1	1.0	0.20	0.50
P-Bromofluorobenzene		96.4	%					
Toluene-d8		111.	%					
1,2-Dichloroethane-d4		112.	%					
Dibromofluoromethane		111.	%					

600 Technology Way
P.O. Box 540, Scarborough, ME 04070
Tel:(207) 874-2400 Fax:(207) 775-4029

Report of Analytical Results

Client: Tetra Tech NUS, Inc.
Lab ID: SD3822-3
Client ID: DA-MW-11-062910
Project: CTO WE19 NS Newport, SW
SDG: WE19-3

Sample Date: 29-JUN-10
Received Date: 30-JUN-10
Extract Date: 09-JUL-10
Extracted By: HCG
Extraction Method:
Lab Prep Batch: WG79497

Analysis Date: 09-JUL-10
Analyst: HCG
Analysis Method: SW846 8260B
Matrix: AQ
% Solids: NA
Report Date: 20-JUL-10

Compound	Qualifier	Result	Units	Dilution	LOQ	ADJ LOQ	ADJ MDL	ADJ LOD
Dichlorodifluoromethane	U	1.0	ug/L	1	2	2.0	0.24	1.0
Chloromethane	U	1.0	ug/L	1	2	2.0	0.36	1.0
Vinyl Chloride	U	1.0	ug/L	1	2	2.0	0.25	1.0
Bromomethane	U	1.0	ug/L	1	2	2.0	0.49	1.0
Chloroethane	U	1.0	ug/L	1	2	2.0	0.55	1.0
Trichlorofluoromethane	U	1.0	ug/L	1	2	2.0	0.24	1.0
1,1-Dichloroethene	U	0.50	ug/L	1	1	1.0	0.35	0.50
Carbon Disulfide	U	0.50	ug/L	1	1	1.0	0.25	0.50
Methylene Chloride	U	2.5	ug/L	1	5	5.0	1.1	2.5
Acetone	U	2.5	ug/L	1	5	5.0	2.2	2.5
trans-1,2-Dichloroethene	U	0.50	ug/L	1	1	1.0	0.25	0.50
Methyl tert-butyl Ether	U	0.50	ug/L	1	1	1.0	0.36	0.50
1,1-Dichloroethane	U	0.50	ug/L	1	1	1.0	0.21	0.50
cis-1,2-Dichloroethene	U	0.50	ug/L	1	1	1.0	0.21	0.50
2,2-Dichloropropane	U	0.50	ug/L	1	1	1.0	0.25	0.50
Bromochloromethane	U	0.50	ug/L	1	1	1.0	0.21	0.50
Chloroform	U	0.50	ug/L	1	1	1.0	0.32	0.50
Carbon Tetrachloride	U	0.50	ug/L	1	1	1.0	0.22	0.50
1,1,1-Trichloroethane	U	0.50	ug/L	1	1	1.0	0.20	0.50
1,1-Dichloropropene	U	0.50	ug/L	1	1	1.0	0.21	0.50
2-Butanone	U	2.5	ug/L	1	5	5.0	1.3	2.5
Benzene	U	0.50	ug/L	1	1	1.0	0.26	0.50
1,2-Dichloroethane	U	0.50	ug/L	1	1	1.0	0.20	0.50
Trichloroethene	U	0.50	ug/L	1	1	1.0	0.28	0.50
Dibromomethane	U	0.50	ug/L	1	1	1.0	0.46	0.50
1,2-Dichloropropane	U	0.50	ug/L	1	1	1.0	0.25	0.50
Bromodichloromethane	U	0.50	ug/L	1	1	1.0	0.33	0.50
cis-1,3-Dichloropropene	U	0.50	ug/L	1	1	1.0	0.19	0.50
Toluene	U	0.50	ug/L	1	1	1.0	0.27	0.50
4-Methyl-2-Pentanone	U	2.5	ug/L	1	5	5.0	1.3	2.5
Tetrachloroethene	U	0.50	ug/L	1	1	1.0	0.40	0.50
trans-1,3-Dichloropropene	U	0.50	ug/L	1	1	1.0	0.20	0.50
1,1,2-Trichloroethane	U	0.50	ug/L	1	1	1.0	0.33	0.50
Dibromochloromethane	U	0.50	ug/L	1	1	1.0	0.30	0.50
1,3-Dichloropropane	U	0.50	ug/L	1	1	1.0	0.22	0.50

600 Technology Way
P.O. Box 540, Scarborough, ME 04070
Tel:(207) 874-2400 Fax:(207) 775-4029

http://www.katahdinlab.com

Report of Analytical Results

Client: Tetra Tech NUS, Inc.
Lab ID: SD3822-3
Client ID: DA-MW-11-062910
Project: CTO WE19 NS Newport, SW
SDG: WE19-3

Sample Date: 29-JUN-10
Received Date: 30-JUN-10
Extract Date: 09-JUL-10
Extracted By: HCG
Extraction Method:
Lab Prep Batch: WG79497

Analysis Date: 09-JUL-10
Analyst: HCG
Analysis Method: SW846 8260B
Matrix: AQ
% Solids: NA
Report Date: 20-JUL-10

Compound	Qualifier	Result	Units	Dilution	LOQ	ADJ LOQ	ADJ MDL	ADJ LOD
1,2-Dibromoethane	U	0.50	ug/L	1	1	1.0	0.22	0.50
2-Hexanone	U	2.5	ug/L	1	5	5.0	1.7	2.5
Chlorobenzene	U	0.50	ug/L	1	1	1.0	0.22	0.50
Ethylbenzene	U	0.50	ug/L	1	1	1.0	0.21	0.50
1,1,1,2-Tetrachloroethane	U	0.50	ug/L	1	1	1.0	0.19	0.50
m+p-Xylenes	U	1.0	ug/L	1	2	2.0	0.59	1.0
o-Xylene	U	0.50	ug/L	1	1	1.0	0.25	0.50
Styrene	U	0.50	ug/L	1	1	1.0	0.23	0.50
Bromoform	U	0.50	ug/L	1	1	1.0	0.23	0.50
Isopropylbenzene	U	0.50	ug/L	1	1	1.0	0.23	0.50
Bromobenzene	U	0.50	ug/L	1	1	1.0	0.24	0.50
N-Propylbenzene	U	0.50	ug/L	1	1	1.0	0.26	0.50
1,1,2,2-Tetrachloroethane	U	0.50	ug/L	1	1	1.0	0.38	0.50
1,3,5-Trimethylbenzene	U	0.50	ug/L	1	1	1.0	0.20	0.50
2-Chlorotoluene	U	0.50	ug/L	1	1	1.0	0.20	0.50
1,2,3-Trichloropropane	U	0.50	ug/L	1	1	1.0	0.19	0.50
4-Chlorotoluene	U	0.50	ug/L	1	1	1.0	0.26	0.50
tert-Butylbenzene	U	0.50	ug/L	1	1	1.0	0.31	0.50
1,2,4-Trimethylbenzene	U	0.50	ug/L	1	1	1.0	0.19	0.50
P-Isopropyltoluene	U	0.50	ug/L	1	1	1.0	0.25	0.50
1,3-Dichlorobenzene	U	0.50	ug/L	1	1	1.0	0.26	0.50
1,4-Dichlorobenzene	U	0.50	ug/L	1	1	1.0	0.24	0.50
N-Butylbenzene	U	0.50	ug/L	1	1	1.0	0.23	0.50
sec-Butylbenzene	U	0.50	ug/L	1	1	1.0	0.21	0.50
1,2-Dichlorobenzene	U	0.50	ug/L	1	1	1.0	0.15	0.50
1,2-Dibromo-3-Chloropropane	U	0.75	ug/L	1	1	1.0	0.50	0.75
Hexachlorobutadiene	U	0.50	ug/L	1	1	1.0	0.52	0.50
1,2,4-Trichlorobenzene	U	0.50	ug/L	1	1	1.0	0.37	0.50
1,2,3-Trichlorobenzene	U	0.50	ug/L	1	1	1.0	0.20	0.50
P-Bromofluorobenzene		73.2	%					
Toluene-d8		99.2	%					
1,2-Dichloroethane-d4		116.	%					
Dibromofluoromethane		109.	%					

600 Technology Way
P.O. Box 540, Scarborough, ME 04070
Tel:(207) 874-2400 Fax:(207) 775-4029

Report of Analytical Results

Client: Tetra Tech NUS, Inc.
Lab ID: SD3855-4
Client ID: DA-MW-12-063010
Project: CTO WE19 NS Newport, SW
SDG: WE19-3

Sample Date: 30-JUN-10
Received Date: 01-JUL-10
Extract Date: 09-JUL-10
Extracted By: HCG
Extraction Method:
Lab Prep Batch: WG79497

Analysis Date: 09-JUL-10
Analyst: HCG
Analysis Method: SW846 8260B
Matrix: AQ
% Solids: NA
Report Date: 20-JUL-10

Compound	Qualifier	Result	Units	Dilution	LOQ	ADJ LOQ	ADJ MDL	ADJ LOD
Dichlorodifluoromethane	U	1.0	ug/L	1	2	2.0	0.24	1.0
Chloromethane	U	1.0	ug/L	1	2	2.0	0.36	1.0
Vinyl Chloride	U	1.0	ug/L	1	2	2.0	0.25	1.0
Bromomethane	U	1.0	ug/L	1	2	2.0	0.49	1.0
Chloroethane	U	1.0	ug/L	1	2	2.0	0.55	1.0
Trichlorofluoromethane	U	1.0	ug/L	1	2	2.0	0.24	1.0
1,1-Dichloroethene	U	0.50	ug/L	1	1	1.0	0.35	0.50
Carbon Disulfide	U	0.50	ug/L	1	1	1.0	0.25	0.50
Methylene Chloride	U	2.5	ug/L	1	5	5.0	1.1	2.5
Acetone	U	2.5	ug/L	1	5	5.0	2.2	2.5
trans-1,2-Dichloroethene	U	0.50	ug/L	1	1	1.0	0.25	0.50
Methyl tert-butyl Ether	U	0.50	ug/L	1	1	1.0	0.36	0.50
1,1-Dichloroethane	U	0.50	ug/L	1	1	1.0	0.21	0.50
cis-1,2-Dichloroethene	J	0.23	ug/L	1	1	1.0	0.21	0.50
2,2-Dichloropropane	U	0.50	ug/L	1	1	1.0	0.25	0.50
Bromochloromethane	U	0.50	ug/L	1	1	1.0	0.21	0.50
Chloroform	U	0.50	ug/L	1	1	1.0	0.32	0.50
Carbon Tetrachloride	U	0.50	ug/L	1	1	1.0	0.22	0.50
1,1,1-Trichloroethane	U	0.50	ug/L	1	1	1.0	0.20	0.50
1,1-Dichloropropene	U	0.50	ug/L	1	1	1.0	0.21	0.50
2-Butanone	U	2.5	ug/L	1	5	5.0	1.3	2.5
Benzene	U	0.50	ug/L	1	1	1.0	0.26	0.50
1,2-Dichloroethane	U	0.50	ug/L	1	1	1.0	0.20	0.50
Trichloroethene		1.1	ug/L	1	1	1.0	0.28	0.50
Dibromomethane	U	0.50	ug/L	1	1	1.0	0.46	0.50
1,2-Dichloropropane	U	0.50	ug/L	1	1	1.0	0.25	0.50
Bromodichloromethane	U	0.50	ug/L	1	1	1.0	0.33	0.50
cis-1,3-Dichloropropene	U	0.50	ug/L	1	1	1.0	0.19	0.50
Toluene	U	0.50	ug/L	1	1	1.0	0.27	0.50
4-Methyl-2-Pentanone	U	2.5	ug/L	1	5	5.0	1.3	2.5
Tetrachloroethene		4.5	ug/L	1	1	1.0	0.40	0.50
trans-1,3-Dichloropropene	U	0.50	ug/L	1	1	1.0	0.20	0.50
1,1,2-Trichloroethane	U	0.50	ug/L	1	1	1.0	0.33	0.50
Dibromochloromethane	U	0.50	ug/L	1	1	1.0	0.30	0.50
1,3-Dichloropropane	U	0.50	ug/L	1	1	1.0	0.22	0.50

600 Technology Way
P.O. Box 540, Scarborough, ME 04070
Tel:(207) 874-2400 Fax:(207) 775-4029

Report of Analytical Results

Client: Tetra Tech NUS, Inc.
Lab ID: SD3855-4
Client ID: DA-MW-12-063010
Project: CTO WE19 NS Newport, SW
SDG: WE19-3

Sample Date: 30-JUN-10
Received Date: 01-JUL-10
Extract Date: 09-JUL-10
Extracted By: HCG
Extraction Method:
Lab Prep Batch: WG79497

Analysis Date: 09-JUL-10
Analyst: HCG
Analysis Method: SW846 8260B
Matrix: AQ
% Solids: NA
Report Date: 20-JUL-10

Compound	Qualifier	Result	Units	Dilution	LOQ	ADJ LOQ	ADJ MDL	ADJ LOD
1,2-Dibromoethane	U	0.50	ug/L	1	1	1.0	0.22	0.50
2-Hexanone	U	2.5	ug/L	1	5	5.0	1.7	2.5
Chlorobenzene	U	0.50	ug/L	1	1	1.0	0.22	0.50
Ethylbenzene	U	0.50	ug/L	1	1	1.0	0.21	0.50
1,1,1,2-Tetrachloroethane	U	0.50	ug/L	1	1	1.0	0.19	0.50
m+p-Xylenes	U	1.0	ug/L	1	2	2.0	0.59	1.0
o-Xylene	U	0.50	ug/L	1	1	1.0	0.25	0.50
Styrene	U	0.50	ug/L	1	1	1.0	0.23	0.50
Bromoform	U	0.50	ug/L	1	1	1.0	0.23	0.50
Isopropylbenzene	U	0.50	ug/L	1	1	1.0	0.23	0.50
Bromobenzene	U	0.50	ug/L	1	1	1.0	0.24	0.50
N-Propylbenzene	U	0.50	ug/L	1	1	1.0	0.26	0.50
1,1,2,2-Tetrachloroethane	U	0.50	ug/L	1	1	1.0	0.38	0.50
1,3,5-Trimethylbenzene	U	0.50	ug/L	1	1	1.0	0.20	0.50
2-Chlorotoluene	U	0.50	ug/L	1	1	1.0	0.20	0.50
1,2,3-Trichloropropane	U	0.50	ug/L	1	1	1.0	0.19	0.50
4-Chlorotoluene	U	0.50	ug/L	1	1	1.0	0.26	0.50
tert-Butylbenzene	U	0.50	ug/L	1	1	1.0	0.31	0.50
1,2,4-Trimethylbenzene	U	0.50	ug/L	1	1	1.0	0.19	0.50
P-Isopropyltoluene	U	0.50	ug/L	1	1	1.0	0.25	0.50
1,3-Dichlorobenzene	U	0.50	ug/L	1	1	1.0	0.26	0.50
1,4-Dichlorobenzene	U	0.50	ug/L	1	1	1.0	0.24	0.50
N-Butylbenzene	U	0.50	ug/L	1	1	1.0	0.23	0.50
sec-Butylbenzene	U	0.50	ug/L	1	1	1.0	0.21	0.50
1,2-Dichlorobenzene	U	0.50	ug/L	1	1	1.0	0.15	0.50
1,2-Dibromo-3-Chloropropane	U	0.75	ug/L	1	1	1.0	0.50	0.75
Hexachlorobutadiene	U	0.50	ug/L	1	1	1.0	0.52	0.50
1,2,4-Trichlorobenzene	U	0.50	ug/L	1	1	1.0	0.37	0.50
1,2,3-Trichlorobenzene	U	0.50	ug/L	1	1	1.0	0.20	0.50
P-Bromofluorobenzene		72.6	%					
Toluene-d8		99.0	%					
1,2-Dichloroethane-d4		119.	%					
Dibromofluoromethane		111.	%					

600 Technology Way
P.O. Box 540, Scarborough, ME 04070
Tel:(207) 874-2400 Fax:(207) 775-4029

http://www.katahdinlab.com

Report of Analytical Results

Client: Tetra Tech NUS, Inc.
Lab ID: SD3855-2
Client ID: DA-MW-122-063010
Project: CTO WE19 NS Newport, SW
SDG: WE19-3

Sample Date: 30-JUN-10
Received Date: 01-JUL-10
Extract Date: 09-JUL-10
Extracted By: HCG
Extraction Method:
Lab Prep Batch: WG79497

Analysis Date: 09-JUL-10
Analyst: HCG
Analysis Method: SW846 8260B
Matrix: AQ
% Solids: NA
Report Date: 20-JUL-10

Compound	Qualifier	Result	Units	Dilution	LOQ	ADJ LOQ	ADJ MDL	ADJ LOD
Dichlorodifluoromethane	U	1.0	ug/L	1	2	2.0	0.24	1.0
Chloromethane	U	1.0	ug/L	1	2	2.0	0.36	1.0
Vinyl Chloride	U	1.0	ug/L	1	2	2.0	0.25	1.0
Bromomethane	U	1.0	ug/L	1	2	2.0	0.49	1.0
Chloroethane	U	1.0	ug/L	1	2	2.0	0.55	1.0
Trichlorofluoromethane	U	1.0	ug/L	1	2	2.0	0.24	1.0
1,1-Dichloroethene	U	0.50	ug/L	1	1	1.0	0.35	0.50
Carbon Disulfide	U	0.50	ug/L	1	1	1.0	0.25	0.50
Methylene Chloride	U	2.5	ug/L	1	5	5.0	1.1	2.5
Acetone	U	2.5	ug/L	1	5	5.0	2.2	2.5
trans-1,2-Dichloroethene	U	0.50	ug/L	1	1	1.0	0.25	0.50
Methyl tert-butyl Ether	U	0.50	ug/L	1	1	1.0	0.36	0.50
1,1-Dichloroethane	J	0.84	ug/L	1	1	1.0	0.21	0.50
cis-1,2-Dichloroethene	J	0.53	ug/L	1	1	1.0	0.21	0.50
2,2-Dichloropropane	U	0.50	ug/L	1	1	1.0	0.25	0.50
Bromochloromethane	U	0.50	ug/L	1	1	1.0	0.21	0.50
Chloroform	U	0.50	ug/L	1	1	1.0	0.32	0.50
Carbon Tetrachloride	U	0.50	ug/L	1	1	1.0	0.22	0.50
1,1,1-Trichloroethane	U	0.50	ug/L	1	1	1.0	0.20	0.50
1,1-Dichloropropene	U	0.50	ug/L	1	1	1.0	0.21	0.50
2-Butanone	U	2.5	ug/L	1	5	5.0	1.3	2.5
Benzene	U	0.50	ug/L	1	1	1.0	0.26	0.50
1,2-Dichloroethane	U	0.50	ug/L	1	1	1.0	0.20	0.50
Trichloroethene	J	0.57	ug/L	1	1	1.0	0.28	0.50
Dibromomethane	U	0.50	ug/L	1	1	1.0	0.46	0.50
1,2-Dichloropropane	U	0.50	ug/L	1	1	1.0	0.25	0.50
Bromodichloromethane	U	0.50	ug/L	1	1	1.0	0.33	0.50
cis-1,3-Dichloropropene	U	0.50	ug/L	1	1	1.0	0.19	0.50
Toluene	U	0.50	ug/L	1	1	1.0	0.27	0.50
4-Methyl-2-Pentanone	U	2.5	ug/L	1	5	5.0	1.3	2.5
Tetrachloroethene	J	0.58	ug/L	1	1	1.0	0.40	0.50
trans-1,3-Dichloropropene	U	0.50	ug/L	1	1	1.0	0.20	0.50
1,1,2-Trichloroethane	U	0.50	ug/L	1	1	1.0	0.33	0.50
Dibromochloromethane	U	0.50	ug/L	1	1	1.0	0.30	0.50
1,3-Dichloropropane	U	0.50	ug/L	1	1	1.0	0.22	0.50

600 Technology Way
P.O. Box 540, Scarborough, ME 04070
Tel:(207) 874-2400 Fax:(207) 775-4029

Report of Analytical Results

Client: Tetra Tech NUS, Inc.
Lab ID: SD3855-2
Client ID: DA-MW-122-063010
Project: CTO WE19 NS Newport, SW
SDG: WE19-3

Sample Date: 30-JUN-10
Received Date: 01-JUL-10
Extract Date: 09-JUL-10
Extracted By: HCG
Extraction Method:
Lab Prep Batch: WG79497

Analysis Date: 09-JUL-10
Analyst: HCG
Analysis Method: SW846 8260B
Matrix: AQ
% Solids: NA
Report Date: 20-JUL-10

Compound	Qualifier	Result	Units	Dilution	LOQ	ADJ LOQ	ADJ MDL	ADJ LOD
1,2-Dibromoethane	U	0.50	ug/L	1	1	1.0	0.22	0.50
2-Hexanone	U	2.5	ug/L	1	5	5.0	1.7	2.5
Chlorobenzene	U	0.50	ug/L	1	1	1.0	0.22	0.50
Ethylbenzene	U	0.50	ug/L	1	1	1.0	0.21	0.50
1,1,1,2-Tetrachloroethane	U	0.50	ug/L	1	1	1.0	0.19	0.50
m+p-Xylenes	U	1.0	ug/L	1	2	2.0	0.59	1.0
o-Xylene	U	0.50	ug/L	1	1	1.0	0.25	0.50
Styrene	U	0.50	ug/L	1	1	1.0	0.23	0.50
Bromoform	U	0.50	ug/L	1	1	1.0	0.23	0.50
Isopropylbenzene	U	0.50	ug/L	1	1	1.0	0.23	0.50
Bromobenzene	U	0.50	ug/L	1	1	1.0	0.24	0.50
N-Propylbenzene	U	0.50	ug/L	1	1	1.0	0.26	0.50
1,1,2,2-Tetrachloroethane	U	0.50	ug/L	1	1	1.0	0.38	0.50
1,3,5-Trimethylbenzene	U	0.50	ug/L	1	1	1.0	0.20	0.50
2-Chlorotoluene	U	0.50	ug/L	1	1	1.0	0.20	0.50
1,2,3-Trichloropropane	U	0.50	ug/L	1	1	1.0	0.19	0.50
4-Chlorotoluene	U	0.50	ug/L	1	1	1.0	0.26	0.50
tert-Butylbenzene	U	0.50	ug/L	1	1	1.0	0.31	0.50
1,2,4-Trimethylbenzene	U	0.50	ug/L	1	1	1.0	0.19	0.50
P-Isopropyltoluene	U	0.50	ug/L	1	1	1.0	0.25	0.50
1,3-Dichlorobenzene	U	0.50	ug/L	1	1	1.0	0.26	0.50
1,4-Dichlorobenzene	U	0.50	ug/L	1	1	1.0	0.24	0.50
N-Butylbenzene	U	0.50	ug/L	1	1	1.0	0.23	0.50
sec-Butylbenzene	U	0.50	ug/L	1	1	1.0	0.21	0.50
1,2-Dichlorobenzene	U	0.50	ug/L	1	1	1.0	0.15	0.50
1,2-Dibromo-3-Chloropropane	U	0.75	ug/L	1	1	1.0	0.50	0.75
Hexachlorobutadiene	U	0.50	ug/L	1	1	1.0	0.52	0.50
1,2,4-Trichlorobenzene	U	0.50	ug/L	1	1	1.0	0.37	0.50
1,2,3-Trichlorobenzene	U	0.50	ug/L	1	1	1.0	0.20	0.50
P-Bromofluorobenzene		74.0	%					
Toluene-d8		100.	%					
1,2-Dichloroethane-d4		117.	%					
Dibromofluoromethane		111.	%					

600 Technology Way
P.O. Box 540, Scarborough, ME 04070
Tel:(207) 874-2400 Fax:(207) 775-4029

http://www.katahdinlab.com

Katahdin
ANALYTICAL SERVICES

Cert No E87604

Report of Analytical Results

Client: Tetra Tech NUS, Inc.
Lab ID: SD3855-3
Client ID: DA-MW-13B-063010
Project: CTO WE19 NS Newport, SW
SDG: WE19-3

Sample Date: 30-JUN-10
Received Date: 01-JUL-10
Extract Date: 09-JUL-10
Extracted By: HCG
Extraction Method:
Lab Prep Batch: WG79497

Analysis Date: 09-JUL-10
Analyst: HCG
Analysis Method: SW846 8260B
Matrix: AQ
% Solids: NA
Report Date: 20-JUL-10

Compound	Qualifier	Result	Units	Dilution	LOQ	ADJ LOQ	ADJ MDL	ADJ LOD
Dichlorodifluoromethane	U	1.0	ug/L	1	2	2.0	0.24	1.0
Chloromethane	U	1.0	ug/L	1	2	2.0	0.36	1.0
Vinyl Chloride	U	1.0	ug/L	1	2	2.0	0.25	1.0
Bromomethane	U	1.0	ug/L	1	2	2.0	0.49	1.0
Chloroethane	U	1.0	ug/L	1	2	2.0	0.55	1.0
Trichlorofluoromethane	U	1.0	ug/L	1	2	2.0	0.24	1.0
1,1-Dichloroethene	U	0.50	ug/L	1	1	1.0	0.35	0.50
Carbon Disulfide	U	0.50	ug/L	1	1	1.0	0.25	0.50
Methylene Chloride	U	2.5	ug/L	1	5	5.0	1.1	2.5
Acetone	U	2.5	ug/L	1	5	5.0	2.2	2.5
trans-1,2-Dichloroethene	U	0.50	ug/L	1	1	1.0	0.25	0.50
Methyl tert-butyl Ether	U	0.50	ug/L	1	1	1.0	0.36	0.50
1,1-Dichloroethane	U	0.50	ug/L	1	1	1.0	0.21	0.50
cis-1,2-Dichloroethene	J	0.51	ug/L	1	1	1.0	0.21	0.50
2,2-Dichloropropane	U	0.50	ug/L	1	1	1.0	0.25	0.50
Bromochloromethane	U	0.50	ug/L	1	1	1.0	0.21	0.50
Chloroform	U	0.50	ug/L	1	1	1.0	0.32	0.50
Carbon Tetrachloride	U	0.50	ug/L	1	1	1.0	0.22	0.50
1,1,1-Trichloroethane	U	0.50	ug/L	1	1	1.0	0.20	0.50
1,1-Dichloropropene	U	0.50	ug/L	1	1	1.0	0.21	0.50
2-Butanone	U	2.5	ug/L	1	5	5.0	1.3	2.5
Benzene	U	0.50	ug/L	1	1	1.0	0.26	0.50
1,2-Dichloroethane	U	0.50	ug/L	1	1	1.0	0.20	0.50
Trichloroethene	J	0.37	ug/L	1	1	1.0	0.28	0.50
Dibromomethane	U	0.50	ug/L	1	1	1.0	0.46	0.50
1,2-Dichloropropane	U	0.50	ug/L	1	1	1.0	0.25	0.50
Bromodichloromethane	U	0.50	ug/L	1	1	1.0	0.33	0.50
cis-1,3-Dichloropropene	U	0.50	ug/L	1	1	1.0	0.19	0.50
Toluene	U	0.50	ug/L	1	1	1.0	0.27	0.50
4-Methyl-2-Pentanone	U	2.5	ug/L	1	5	5.0	1.3	2.5
Tetrachloroethene		1.1	ug/L	1	1	1.0	0.40	0.50
trans-1,3-Dichloropropene	U	0.50	ug/L	1	1	1.0	0.20	0.50
1,1,2-Trichloroethane	U	0.50	ug/L	1	1	1.0	0.33	0.50
Dibromochloromethane	U	0.50	ug/L	1	1	1.0	0.30	0.50
1,3-Dichloropropane	U	0.50	ug/L	1	1	1.0	0.22	0.50

600 Technology Way
P.O. Box 540, Scarborough, ME 04070
Tel:(207) 874-2400 Fax:(207) 775-4029

http://www.katahdinlab.com

Report of Analytical Results

Client: Tetra Tech NUS, Inc.
Lab ID: SD3855-3
Client ID: DA-MW-13B-063010
Project: CTO WE19 NS Newport, SW
SDG: WE19-3

Sample Date: 30-JUN-10
Received Date: 01-JUL-10
Extract Date: 09-JUL-10
Extracted By: HCG
Extraction Method:
Lab Prep Batch: WG79497

Analysis Date: 09-JUL-10
Analyst: HCG
Analysis Method: SW846 8260B
Matrix: AQ
% Solids: NA
Report Date: 20-JUL-10

Compound	Qualifier	Result	Units	Dilution	LOQ	ADJ LOQ	ADJ MDL	ADJ LOD
1,2-Dibromoethane	U	0.50	ug/L	1	1	1.0	0.22	0.50
2-Hexanone	U	2.5	ug/L	1	5	5.0	1.7	2.5
Chlorobenzene	U	0.50	ug/L	1	1	1.0	0.22	0.50
Ethylbenzene	U	0.50	ug/L	1	1	1.0	0.21	0.50
1,1,1,2-Tetrachloroethane	U	0.50	ug/L	1	1	1.0	0.19	0.50
m+p-Xylenes	U	1.0	ug/L	1	2	2.0	0.59	1.0
o-Xylene	U	0.50	ug/L	1	1	1.0	0.25	0.50
Styrene	U	0.50	ug/L	1	1	1.0	0.23	0.50
Bromoform	U	0.50	ug/L	1	1	1.0	0.23	0.50
Isopropylbenzene	U	0.50	ug/L	1	1	1.0	0.23	0.50
Bromobenzene	U	0.50	ug/L	1	1	1.0	0.24	0.50
N-Propylbenzene	U	0.50	ug/L	1	1	1.0	0.26	0.50
1,1,2,2-Tetrachloroethane	U	0.50	ug/L	1	1	1.0	0.38	0.50
1,3,5-Trimethylbenzene	U	0.50	ug/L	1	1	1.0	0.20	0.50
2-Chlorotoluene	U	0.50	ug/L	1	1	1.0	0.20	0.50
1,2,3-Trichloropropane	U	0.50	ug/L	1	1	1.0	0.19	0.50
4-Chlorotoluene	U	0.50	ug/L	1	1	1.0	0.26	0.50
tert-Butylbenzene	U	0.50	ug/L	1	1	1.0	0.31	0.50
1,2,4-Trimethylbenzene	U	0.50	ug/L	1	1	1.0	0.19	0.50
P-Isopropyltoluene	U	0.50	ug/L	1	1	1.0	0.25	0.50
1,3-Dichlorobenzene	U	0.50	ug/L	1	1	1.0	0.26	0.50
1,4-Dichlorobenzene	U	0.50	ug/L	1	1	1.0	0.24	0.50
N-Butylbenzene	U	0.50	ug/L	1	1	1.0	0.23	0.50
sec-Butylbenzene	U	0.50	ug/L	1	1	1.0	0.21	0.50
1,2-Dichlorobenzene	U	0.50	ug/L	1	1	1.0	0.15	0.50
1,2-Dibromo-3-Chloropropane	U	0.75	ug/L	1	1	1.0	0.50	0.75
Hexachlorobutadiene	U	0.50	ug/L	1	1	1.0	0.52	0.50
1,2,4-Trichlorobenzene	U	0.50	ug/L	1	1	1.0	0.37	0.50
1,2,3-Trichlorobenzene	U	0.50	ug/L	1	1	1.0	0.20	0.50
P-Bromofluorobenzene		74.8	%					
Toluene-d8		97.8	%					
1,2-Dichloroethane-d4		123.	%					
Dibromofluoromethane		116.	%					

600 Technology Way
P.O. Box 540, Scarborough, ME 04070
Tel:(207) 874-2400 Fax:(207) 775-4029

http://www.katahdinlab.com

Report of Analytical Results

Client: Tetra Tech NUS, Inc.
Lab ID: SD3782-3
Client ID: DA-MW-DUP01-062810
Project: CTO WE19 NS Newport, SW
SDG: WE19-3

Sample Date: 28-JUN-10
Received Date: 29-JUN-10
Extract Date: 06-JUL-10
Extracted By: HCG
Extraction Method:
Lab Prep Batch: WG79391

Analysis Date: 06-JUL-10
Analyst: HCG
Analysis Method: SW846 8260B
Matrix: AQ
% Solids: NA
Report Date: 20-JUL-10

Compound	Qualifier	Result	Units	Dilution	LOQ	ADJ LOQ	ADJ MDL	ADJ LOD
Dichlorodifluoromethane	U	1.0	ug/L	1	2	2.0	0.24	1.0
Chloromethane	U	1.0	ug/L	1	2	2.0	0.36	1.0
Vinyl Chloride	U	1.0	ug/L	1	2	2.0	0.25	1.0
Bromomethane	U	1.0	ug/L	1	2	2.0	0.49	1.0
Chloroethane	U	1.0	ug/L	1	2	2.0	0.55	1.0
Trichlorofluoromethane	U	1.0	ug/L	1	2	2.0	0.24	1.0
1,1-Dichloroethene	J	0.76	ug/L	1	1	1.0	0.35	0.50
Carbon Disulfide	U	0.50	ug/L	1	1	1.0	0.25	0.50
Methylene Chloride	U	2.5	ug/L	1	5	5.0	1.1	2.5
Acetone	U	2.5	ug/L	1	5	5.0	2.2	2.5
trans-1,2-Dichloroethene	U	0.50	ug/L	1	1	1.0	0.25	0.50
Methyl tert-butyl Ether	U	0.50	ug/L	1	1	1.0	0.36	0.50
1,1-Dichloroethane		3.8	ug/L	1	1	1.0	0.21	0.50
cis-1,2-Dichloroethene		1.6	ug/L	1	1	1.0	0.21	0.50
2,2-Dichloropropane	U	0.50	ug/L	1	1	1.0	0.25	0.50
Bromochloromethane	U	0.50	ug/L	1	1	1.0	0.21	0.50
Chloroform	J	0.65	ug/L	1	1	1.0	0.32	0.50
Carbon Tetrachloride		2.6	ug/L	1	1	1.0	0.22	0.50
1,1,1-Trichloroethane		2.7	ug/L	1	1	1.0	0.20	0.50
1,1-Dichloropropene	U	0.50	ug/L	1	1	1.0	0.21	0.50
2-Butanone	U	2.5	ug/L	1	5	5.0	1.3	2.5
Benzene	U	0.50	ug/L	1	1	1.0	0.26	0.50
1,2-Dichloroethane	U	0.50	ug/L	1	1	1.0	0.20	0.50
Trichloroethene	E	220	ug/L	1	1	1.0	0.28	0.50
Dibromomethane	U	0.50	ug/L	1	1	1.0	0.46	0.50
1,2-Dichloropropane	U	0.50	ug/L	1	1	1.0	0.25	0.50
Bromodichloromethane	U	0.50	ug/L	1	1	1.0	0.33	0.50
cis-1,3-Dichloropropene	U	0.50	ug/L	1	1	1.0	0.19	0.50
Toluene	U	0.50	ug/L	1	1	1.0	0.27	0.50
4-Methyl-2-Pentanone	U	2.5	ug/L	1	5	5.0	1.3	2.5
Tetrachloroethene		1.3	ug/L	1	1	1.0	0.40	0.50
trans-1,3-Dichloropropene	U	0.50	ug/L	1	1	1.0	0.20	0.50
1,1,2-Trichloroethane	U	0.50	ug/L	1	1	1.0	0.33	0.50
Dibromochloromethane	U	0.50	ug/L	1	1	1.0	0.30	0.50
1,3-Dichloropropane	U	0.50	ug/L	1	1	1.0	0.22	0.50

600 Technology Way
P.O. Box 540, Scarborough, ME 04070
Tel:(207) 874-2400 Fax:(207) 775-4029

Report of Analytical Results

Client: Tetra Tech NUS, Inc.
Lab ID: SD3782-3DL
Client ID: DA-MW-DUP01-062810
Project: CTO WE19 NS Newport, SW
SDG: WE19-3

Sample Date: 28-JUN-10
Received Date: 29-JUN-10
Extract Date: 07-JUL-10
Extracted By: HCG
Extraction Method:
Lab Prep Batch: WG79439

Analysis Date: 07-JUL-10
Analyst: HCG
Analysis Method: SW846 8260B
Matrix: AQ
% Solids: NA
Report Date: 20-JUL-10

Compound	Qualifier	Result	Units	Dilution	LOQ	ADJ LOQ	ADJ MDL	ADJ LOD
1,2-Dibromoethane	U	1.0	ug/L	2	1	2.0	0.44	1.0
2-Hexanone	U	5.0	ug/L	2	5	10.	3.4	5.0
Chlorobenzene	U	1.0	ug/L	2	1	2.0	0.44	1.0
Ethylbenzene	U	1.0	ug/L	2	1	2.0	0.42	1.0
1,1,1,2-Tetrachloroethane	U	1.0	ug/L	2	1	2.0	0.38	1.0
m+p-Xylenes	U	2.0	ug/L	2	2	4.0	1.2	2.0
o-Xylene	U	1.0	ug/L	2	1	2.0	0.50	1.0
Styrene	U	1.0	ug/L	2	1	2.0	0.46	1.0
Bromoform	U	1.0	ug/L	2	1	2.0	0.46	1.0
Isopropylbenzene	U	1.0	ug/L	2	1	2.0	0.46	1.0
Bromobenzene	U	1.0	ug/L	2	1	2.0	0.48	1.0
N-Propylbenzene	U	1.0	ug/L	2	1	2.0	0.52	1.0
1,1,2,2-Tetrachloroethane	U	1.0	ug/L	2	1	2.0	0.76	1.0
1,3,5-Trimethylbenzene	U	1.0	ug/L	2	1	2.0	0.40	1.0
2-Chlorotoluene	U	1.0	ug/L	2	1	2.0	0.40	1.0
1,2,3-Trichloropropane	U	1.0	ug/L	2	1	2.0	0.38	1.0
4-Chlorotoluene	U	1.0	ug/L	2	1	2.0	0.52	1.0
tert-Butylbenzene	U	1.0	ug/L	2	1	2.0	0.62	1.0
1,2,4-Trimethylbenzene	U	1.0	ug/L	2	1	2.0	0.38	1.0
P-Isopropyltoluene	U	1.0	ug/L	2	1	2.0	0.50	1.0
1,3-Dichlorobenzene	U	1.0	ug/L	2	1	2.0	0.52	1.0
1,4-Dichlorobenzene	U	1.0	ug/L	2	1	2.0	0.48	1.0
N-Butylbenzene	U	1.0	ug/L	2	1	2.0	0.46	1.0
sec-Butylbenzene	U	1.0	ug/L	2	1	2.0	0.42	1.0
1,2-Dichlorobenzene	U	1.0	ug/L	2	1	2.0	0.30	1.0
1,2-Dibromo-3-Chloropropane	U	1.5	ug/L	2	1	2.0	1.0	1.5
Hexachlorobutadiene	U	1.0	ug/L	2	1	2.0	1.0	1.0
1,2,4-Trichlorobenzene	U	1.0	ug/L	2	1	2.0	0.74	1.0
1,2,3-Trichlorobenzene	U	1.0	ug/L	2	1	2.0	0.40	1.0
P-Bromofluorobenzene		75.4	%					
Toluene-d8		102.	%					
1,2-Dichloroethane-d4		122.	%					
Dibromofluoromethane		126.	%					

600 Technology Way
P.O. Box 540, Scarborough, ME 04070
Tel:(207) 874-2400 Fax:(207) 775-4029

Report of Analytical Results

Client: Tetra Tech NUS, Inc.
Lab ID: SD3822-4
Client ID: DA-MW-DUP02-062910
Project: CTO WE19 NS Newport, SW
SDG: WE19-3

Sample Date: 29-JUN-10
Received Date: 30-JUN-10
Extract Date: 09-JUL-10
Extracted By: HCG
Extraction Method:
Lab Prep Batch: WG79497

Analysis Date: 09-JUL-10
Analyst: HCG
Analysis Method: SW846 8260B
Matrix: AQ
% Solids: NA
Report Date: 20-JUL-10

Compound	Qualifier	Result	Units	Dilution	LOQ	ADJ LOQ	ADJ MDL	ADJ LOD
Dichlorodifluoromethane	U	1.0	ug/L	1	2	2.0	0.24	1.0
Chloromethane	U	1.0	ug/L	1	2	2.0	0.36	1.0
Vinyl Chloride	U	1.0	ug/L	1	2	2.0	0.25	1.0
Bromomethane	U	1.0	ug/L	1	2	2.0	0.49	1.0
Chloroethane	U	1.0	ug/L	1	2	2.0	0.55	1.0
Trichlorofluoromethane	U	1.0	ug/L	1	2	2.0	0.24	1.0
1,1-Dichloroethene	U	0.50	ug/L	1	1	1.0	0.35	0.50
Carbon Disulfide	U	0.50	ug/L	1	1	1.0	0.25	0.50
Methylene Chloride	U	2.5	ug/L	1	5	5.0	1.1	2.5
Acetone	U	2.5	ug/L	1	5	5.0	2.2	2.5
trans-1,2-Dichloroethene	U	0.50	ug/L	1	1	1.0	0.25	0.50
Methyl tert-butyl Ether	U	0.50	ug/L	1	1	1.0	0.36	0.50
1,1-Dichloroethane	U	0.50	ug/L	1	1	1.0	0.21	0.50
cis-1,2-Dichloroethene	U	0.50	ug/L	1	1	1.0	0.21	0.50
2,2-Dichloropropane	U	0.50	ug/L	1	1	1.0	0.25	0.50
Bromochloromethane	U	0.50	ug/L	1	1	1.0	0.21	0.50
Chloroform	U	0.50	ug/L	1	1	1.0	0.32	0.50
Carbon Tetrachloride	U	0.50	ug/L	1	1	1.0	0.22	0.50
1,1,1-Trichloroethane	U	0.50	ug/L	1	1	1.0	0.20	0.50
1,1-Dichloropropene	U	0.50	ug/L	1	1	1.0	0.21	0.50
2-Butanone	U	2.5	ug/L	1	5	5.0	1.3	2.5
Benzene	U	0.50	ug/L	1	1	1.0	0.26	0.50
1,2-Dichloroethane	U	0.50	ug/L	1	1	1.0	0.20	0.50
Trichloroethene	U	0.50	ug/L	1	1	1.0	0.28	0.50
Dibromomethane	U	0.50	ug/L	1	1	1.0	0.46	0.50
1,2-Dichloropropane	U	0.50	ug/L	1	1	1.0	0.25	0.50
Bromodichloromethane	U	0.50	ug/L	1	1	1.0	0.33	0.50
cis-1,3-Dichloropropene	U	0.50	ug/L	1	1	1.0	0.19	0.50
Toluene	U	0.50	ug/L	1	1	1.0	0.27	0.50
4-Methyl-2-Pentanone	U	2.5	ug/L	1	5	5.0	1.3	2.5
Tetrachloroethene	U	0.50	ug/L	1	1	1.0	0.40	0.50
trans-1,3-Dichloropropene	U	0.50	ug/L	1	1	1.0	0.20	0.50
1,1,2-Trichloroethane	U	0.50	ug/L	1	1	1.0	0.33	0.50
Dibromochloromethane	U	0.50	ug/L	1	1	1.0	0.30	0.50
1,3-Dichloropropane	U	0.50	ug/L	1	1	1.0	0.22	0.50

600 Technology Way
P.O. Box 540, Scarborough, ME 04070
Tel:(207) 874-2400 Fax:(207) 775-4029

Report of Analytical Results

Client: Tetra Tech NUS, Inc.
Lab ID: SD3822-4
Client ID: DA-MW-DUP02-062910
Project: CTO WE19 NS Newport, SW
SDG: WE19-3

Sample Date: 29-JUN-10
Received Date: 30-JUN-10
Extract Date: 09-JUL-10
Extracted By: HCG
Extraction Method:
Lab Prep Batch: WG79497

Analysis Date: 09-JUL-10
Analyst: HCG
Analysis Method: SW846 8260B
Matrix: AQ
% Solids: NA
Report Date: 20-JUL-10

Compound	Qualifier	Result	Units	Dilution	LOQ	ADJ LOQ	ADJ MDL	ADJ LOD
1,2-Dibromoethane	U	0.50	ug/L	1	1	1.0	0.22	0.50
2-Hexanone	U	2.5	ug/L	1	5	5.0	1.7	2.5
Chlorobenzene	U	0.50	ug/L	1	1	1.0	0.22	0.50
Ethylbenzene	U	0.50	ug/L	1	1	1.0	0.21	0.50
1,1,1,2-Tetrachloroethane	U	0.50	ug/L	1	1	1.0	0.19	0.50
m+p-Xylenes	U	1.0	ug/L	1	2	2.0	0.59	1.0
o-Xylene	U	0.50	ug/L	1	1	1.0	0.25	0.50
Styrene	U	0.50	ug/L	1	1	1.0	0.23	0.50
Bromoform	U	0.50	ug/L	1	1	1.0	0.23	0.50
Isopropylbenzene	U	0.50	ug/L	1	1	1.0	0.23	0.50
Bromobenzene	U	0.50	ug/L	1	1	1.0	0.24	0.50
N-Propylbenzene	U	0.50	ug/L	1	1	1.0	0.26	0.50
1,1,2,2-Tetrachloroethane	U	0.50	ug/L	1	1	1.0	0.38	0.50
1,3,5-Trimethylbenzene	U	0.50	ug/L	1	1	1.0	0.20	0.50
2-Chlorotoluene	U	0.50	ug/L	1	1	1.0	0.20	0.50
1,2,3-Trichloropropane	U	0.50	ug/L	1	1	1.0	0.19	0.50
4-Chlorotoluene	U	0.50	ug/L	1	1	1.0	0.26	0.50
tert-Butylbenzene	U	0.50	ug/L	1	1	1.0	0.31	0.50
1,2,4-Trimethylbenzene	U	0.50	ug/L	1	1	1.0	0.19	0.50
P-Isopropyltoluene	U	0.50	ug/L	1	1	1.0	0.25	0.50
1,3-Dichlorobenzene	U	0.50	ug/L	1	1	1.0	0.26	0.50
1,4-Dichlorobenzene	U	0.50	ug/L	1	1	1.0	0.24	0.50
N-Butylbenzene	U	0.50	ug/L	1	1	1.0	0.23	0.50
sec-Butylbenzene	U	0.50	ug/L	1	1	1.0	0.21	0.50
1,2-Dichlorobenzene	U	0.50	ug/L	1	1	1.0	0.15	0.50
1,2-Dibromo-3-Chloropropane	U	0.75	ug/L	1	1	1.0	0.50	0.75
Hexachlorobutadiene	U	0.50	ug/L	1	1	1.0	0.52	0.50
1,2,4-Trichlorobenzene	U	0.50	ug/L	1	1	1.0	0.37	0.50
1,2,3-Trichlorobenzene	U	0.50	ug/L	1	1	1.0	0.20	0.50
P-Bromofluorobenzene		71.6	%					
Toluene-d8		95.0	%					
1,2-Dichloroethane-d4		113.	%					
Dibromofluoromethane		107.	%					

600 Technology Way
P.O. Box 540, Scarborough, ME 04070
Tel:(207) 874-2400 Fax:(207) 775-4029

Report of Analytical Results

Client: Tetra Tech NUS, Inc.
Lab ID: SD3782-4
Client ID: DA-TB05-062810
Project: CTO WE19 NS Newport, SW
SDG: WE19-3

Sample Date: 10-JUN-10
Received Date: 29-JUN-10
Extract Date: 06-JUL-10
Extracted By: HCG
Extraction Method:
Lab Prep Batch: WG79391

Analysis Date: 06-JUL-10
Analyst: HCG
Analysis Method: SW846 8260B
Matrix: AQ
% Solids: NA
Report Date: 20-JUL-10

Compound	Qualifier	Result	Units	Dilution	LOQ	ADJ LOQ	ADJ MDL	ADJ LOD
Dichlorodifluoromethane	U	1.0	ug/L	1	2	2.0	0.24	1.0
Chloromethane	U	1.0	ug/L	1	2	2.0	0.36	1.0
Vinyl Chloride	U	1.0	ug/L	1	2	2.0	0.25	1.0
Bromomethane	U	1.0	ug/L	1	2	2.0	0.49	1.0
Chloroethane	U	1.0	ug/L	1	2	2.0	0.55	1.0
Trichlorofluoromethane	U	1.0	ug/L	1	2	2.0	0.24	1.0
1,1-Dichloroethene	U	0.50	ug/L	1	1	1.0	0.35	0.50
Carbon Disulfide	U	0.50	ug/L	1	1	1.0	0.25	0.50
Methylene Chloride	U	2.5	ug/L	1	5	5.0	1.1	2.5
Acetone	U	2.5	ug/L	1	5	5.0	2.2	2.5
trans-1,2-Dichloroethene	U	0.50	ug/L	1	1	1.0	0.25	0.50
Methyl tert-butyl Ether	U	0.50	ug/L	1	1	1.0	0.36	0.50
1,1-Dichloroethane	U	0.50	ug/L	1	1	1.0	0.21	0.50
cis-1,2-Dichloroethene	U	0.50	ug/L	1	1	1.0	0.21	0.50
2,2-Dichloropropane	U	0.50	ug/L	1	1	1.0	0.25	0.50
Bromochloromethane	U	0.50	ug/L	1	1	1.0	0.21	0.50
Chloroform	U	0.50	ug/L	1	1	1.0	0.32	0.50
Carbon Tetrachloride	U	0.50	ug/L	1	1	1.0	0.22	0.50
1,1,1-Trichloroethane	U	0.50	ug/L	1	1	1.0	0.20	0.50
1,1-Dichloropropene	U	0.50	ug/L	1	1	1.0	0.21	0.50
2-Butanone	U	2.5	ug/L	1	5	5.0	1.3	2.5
Benzene	U	0.50	ug/L	1	1	1.0	0.26	0.50
1,2-Dichloroethane	U	0.50	ug/L	1	1	1.0	0.20	0.50
Trichloroethene	U	0.50	ug/L	1	1	1.0	0.28	0.50
Dibromomethane	U	0.50	ug/L	1	1	1.0	0.46	0.50
1,2-Dichloropropane	U	0.50	ug/L	1	1	1.0	0.25	0.50
Bromodichloromethane	U	0.50	ug/L	1	1	1.0	0.33	0.50
cis-1,3-Dichloropropene	U	0.50	ug/L	1	1	1.0	0.19	0.50
Toluene	U	0.50	ug/L	1	1	1.0	0.27	0.50
4-Methyl-2-Pentanone	U	2.5	ug/L	1	5	5.0	1.3	2.5
Tetrachloroethene	U	0.50	ug/L	1	1	1.0	0.40	0.50
trans-1,3-Dichloropropene	U	0.50	ug/L	1	1	1.0	0.20	0.50
1,1,2-Trichloroethane	U	0.50	ug/L	1	1	1.0	0.33	0.50
Dibromochloromethane	U	0.50	ug/L	1	1	1.0	0.30	0.50
1,3-Dichloropropane	U	0.50	ug/L	1	1	1.0	0.22	0.50

600 Technology Way
P.O. Box 540, Scarborough, ME 04070
Tel:(207) 874-2400 Fax:(207) 775-4029

http://www.katahdinlab.com

Report of Analytical Results

Client: Tetra Tech NUS, Inc.
Lab ID: SD3782-4
Client ID: DA-TB05-062810
Project: CTO WE19 NS Newport, SW
SDG: WE19-3

Sample Date: 10-JUN-10
Received Date: 29-JUN-10
Extract Date: 06-JUL-10
Extracted By: HCG
Extraction Method:
Lab Prep Batch: WG79391

Analysis Date: 06-JUL-10
Analyst: HCG
Analysis Method: SW846 8260B
Matrix: AQ
% Solids: NA
Report Date: 20-JUL-10

Compound	Qualifier	Result	Units	Dilution	LOQ	ADJ LOQ	ADJ MDL	ADJ LOD
1,2-Dibromoethane	U	0.50	ug/L	1	1	1.0	0.22	0.50
2-Hexanone	U	2.5	ug/L	1	5	5.0	1.7	2.5
Chlorobenzene	U	0.50	ug/L	1	1	1.0	0.22	0.50
Ethylbenzene	U	0.50	ug/L	1	1	1.0	0.21	0.50
1,1,1,2-Tetrachloroethane	U	0.50	ug/L	1	1	1.0	0.19	0.50
m+p-Xylenes	U	1.0	ug/L	1	2	2.0	0.59	1.0
o-Xylene	U	0.50	ug/L	1	1	1.0	0.25	0.50
Styrene	U	0.50	ug/L	1	1	1.0	0.23	0.50
Bromoform	U	0.50	ug/L	1	1	1.0	0.23	0.50
Isopropylbenzene	U	0.50	ug/L	1	1	1.0	0.23	0.50
Bromobenzene	U	0.50	ug/L	1	1	1.0	0.24	0.50
N-Propylbenzene	U	0.50	ug/L	1	1	1.0	0.26	0.50
1,1,2,2-Tetrachloroethane	U	0.50	ug/L	1	1	1.0	0.38	0.50
1,3,5-Trimethylbenzene	U	0.50	ug/L	1	1	1.0	0.20	0.50
2-Chlorotoluene	U	0.50	ug/L	1	1	1.0	0.20	0.50
1,2,3-Trichloropropane	U	0.50	ug/L	1	1	1.0	0.19	0.50
4-Chlorotoluene	U	0.50	ug/L	1	1	1.0	0.26	0.50
tert-Butylbenzene	U	0.50	ug/L	1	1	1.0	0.31	0.50
1,2,4-Trimethylbenzene	U	0.50	ug/L	1	1	1.0	0.19	0.50
P-Isopropyltoluene	U	0.50	ug/L	1	1	1.0	0.25	0.50
1,3-Dichlorobenzene	U	0.50	ug/L	1	1	1.0	0.26	0.50
1,4-Dichlorobenzene	U	0.50	ug/L	1	1	1.0	0.24	0.50
N-Butylbenzene	U	0.50	ug/L	1	1	1.0	0.23	0.50
sec-Butylbenzene	U	0.50	ug/L	1	1	1.0	0.21	0.50
1,2-Dichlorobenzene	U	0.50	ug/L	1	1	1.0	0.15	0.50
1,2-Dibromo-3-Chloropropane	U	0.75	ug/L	1	1	1.0	0.50	0.75
Hexachlorobutadiene	U	0.50	ug/L	1	1	1.0	0.52	0.50
1,2,4-Trichlorobenzene	U	0.50	ug/L	1	1	1.0	0.37	0.50
1,2,3-Trichlorobenzene	U	0.50	ug/L	1	1	1.0	0.20	0.50
P-Bromofluorobenzene		98.2	%					
Toluene-d8		111.	%					
1,2-Dichloroethane-d4		109.	%					
Dibromofluoromethane		112.	%					

600 Technology Way
P.O. Box 540, Scarborough, ME 04070
Tel:(207) 874-2400 Fax:(207) 775-4029

Report of Analytical Results

Client: Tetra Tech NUS, Inc.
Lab ID: SD3822-5
Client ID: DA-TB06-062910
Project: CTO WE19 NS Newport, SW
SDG: WE19-3

Sample Date: 29-JUN-10
Received Date: 30-JUN-10
Extract Date: 09-JUL-10
Extracted By: HCG
Extraction Method:
Lab Prep Batch: WG79497

Analysis Date: 09-JUL-10
Analyst: HCG
Analysis Method: SW846 8260B
Matrix: AQ
% Solids: NA
Report Date: 20-JUL-10

Compound	Qualifier	Result	Units	Dilution	LOQ	ADJ LOQ	ADJ MDL	ADJ LOD
Dichlorodifluoromethane	U	1.0	ug/L	1	2	2.0	0.24	1.0
Chloromethane	U	1.0	ug/L	1	2	2.0	0.36	1.0
Vinyl Chloride	U	1.0	ug/L	1	2	2.0	0.25	1.0
Bromomethane	U	1.0	ug/L	1	2	2.0	0.49	1.0
Chloroethane	U	1.0	ug/L	1	2	2.0	0.55	1.0
Trichlorofluoromethane	U	1.0	ug/L	1	2	2.0	0.24	1.0
1,1-Dichloroethene	U	0.50	ug/L	1	1	1.0	0.35	0.50
Carbon Disulfide	U	0.50	ug/L	1	1	1.0	0.25	0.50
Methylene Chloride	U	2.5	ug/L	1	5	5.0	1.1	2.5
Acetone	U	2.5	ug/L	1	5	5.0	2.2	2.5
trans-1,2-Dichloroethene	U	0.50	ug/L	1	1	1.0	0.25	0.50
Methyl tert-butyl Ether	U	0.50	ug/L	1	1	1.0	0.36	0.50
1,1-Dichloroethane	U	0.50	ug/L	1	1	1.0	0.21	0.50
cis-1,2-Dichloroethene	U	0.50	ug/L	1	1	1.0	0.21	0.50
2,2-Dichloropropane	U	0.50	ug/L	1	1	1.0	0.25	0.50
Bromochloromethane	U	0.50	ug/L	1	1	1.0	0.21	0.50
Chloroform	U	0.50	ug/L	1	1	1.0	0.32	0.50
Carbon Tetrachloride	U	0.50	ug/L	1	1	1.0	0.22	0.50
1,1,1-Trichloroethane	U	0.50	ug/L	1	1	1.0	0.20	0.50
1,1-Dichloropropene	U	0.50	ug/L	1	1	1.0	0.21	0.50
2-Butanone	U	2.5	ug/L	1	5	5.0	1.3	2.5
Benzene	U	0.50	ug/L	1	1	1.0	0.26	0.50
1,2-Dichloroethane	U	0.50	ug/L	1	1	1.0	0.20	0.50
Trichloroethene	U	0.50	ug/L	1	1	1.0	0.28	0.50
Dibromomethane	U	0.50	ug/L	1	1	1.0	0.46	0.50
1,2-Dichloropropane	U	0.50	ug/L	1	1	1.0	0.25	0.50
Bromodichloromethane	U	0.50	ug/L	1	1	1.0	0.33	0.50
cis-1,3-Dichloropropene	U	0.50	ug/L	1	1	1.0	0.19	0.50
Toluene	U	0.50	ug/L	1	1	1.0	0.27	0.50
4-Methyl-2-Pentanone	U	2.5	ug/L	1	5	5.0	1.3	2.5
Tetrachloroethene	U	0.50	ug/L	1	1	1.0	0.40	0.50
trans-1,3-Dichloropropene	U	0.50	ug/L	1	1	1.0	0.20	0.50
1,1,2-Trichloroethane	U	0.50	ug/L	1	1	1.0	0.33	0.50
Dibromochloromethane	U	0.50	ug/L	1	1	1.0	0.30	0.50
1,3-Dichloropropane	U	0.50	ug/L	1	1	1.0	0.22	0.50

600 Technology Way
P.O. Box 540, Scarborough, ME 04070
Tel:(207) 874-2400 Fax:(207) 775-4029

http://www.katahdinlab.com

Report of Analytical Results

Client: Tetra Tech NUS, Inc.
Lab ID: SD3822-5
Client ID: DA-TB06-062910
Project: CTO WE19 NS Newport, SW
SDG: WE19-3

Sample Date: 29-JUN-10
Received Date: 30-JUN-10
Extract Date: 09-JUL-10
Extracted By: HCG
Extraction Method:
Lab Prep Batch: WG79497

Analysis Date: 09-JUL-10
Analyst: HCG
Analysis Method: SW846 8260B
Matrix: AQ
% Solids: NA
Report Date: 20-JUL-10

Compound	Qualifier	Result	Units	Dilution	LOQ	ADJ LOQ	ADJ MDL	ADJ LOD
1,2-Dibromoethane	U	0.50	ug/L	1	1	1.0	0.22	0.50
2-Hexanone	U	2.5	ug/L	1	5	5.0	1.7	2.5
Chlorobenzene	U	0.50	ug/L	1	1	1.0	0.22	0.50
Ethylbenzene	U	0.50	ug/L	1	1	1.0	0.21	0.50
1,1,1,2-Tetrachloroethane	U	0.50	ug/L	1	1	1.0	0.19	0.50
m+p-Xylenes	U	1.0	ug/L	1	2	2.0	0.59	1.0
o-Xylene	U	0.50	ug/L	1	1	1.0	0.25	0.50
Styrene	U	0.50	ug/L	1	1	1.0	0.23	0.50
Bromoform	U	0.50	ug/L	1	1	1.0	0.23	0.50
Isopropylbenzene	U	0.50	ug/L	1	1	1.0	0.23	0.50
Bromobenzene	U	0.50	ug/L	1	1	1.0	0.24	0.50
N-Propylbenzene	U	0.50	ug/L	1	1	1.0	0.26	0.50
1,1,2,2-Tetrachloroethane	U	0.50	ug/L	1	1	1.0	0.38	0.50
1,3,5-Trimethylbenzene	U	0.50	ug/L	1	1	1.0	0.20	0.50
2-Chlorotoluene	U	0.50	ug/L	1	1	1.0	0.20	0.50
1,2,3-Trichloropropane	U	0.50	ug/L	1	1	1.0	0.19	0.50
4-Chlorotoluene	U	0.50	ug/L	1	1	1.0	0.26	0.50
tert-Butylbenzene	U	0.50	ug/L	1	1	1.0	0.31	0.50
1,2,4-Trimethylbenzene	U	0.50	ug/L	1	1	1.0	0.19	0.50
P-Isopropyltoluene	U	0.50	ug/L	1	1	1.0	0.25	0.50
1,3-Dichlorobenzene	U	0.50	ug/L	1	1	1.0	0.26	0.50
1,4-Dichlorobenzene	U	0.50	ug/L	1	1	1.0	0.24	0.50
N-Butylbenzene	U	0.50	ug/L	1	1	1.0	0.23	0.50
sec-Butylbenzene	U	0.50	ug/L	1	1	1.0	0.21	0.50
1,2-Dichlorobenzene	U	0.50	ug/L	1	1	1.0	0.15	0.50
1,2-Dibromo-3-Chloropropane	U	0.75	ug/L	1	1	1.0	0.50	0.75
Hexachlorobutadiene	U	0.50	ug/L	1	1	1.0	0.52	0.50
1,2,4-Trichlorobenzene	U	0.50	ug/L	1	1	1.0	0.37	0.50
1,2,3-Trichlorobenzene	U	0.50	ug/L	1	1	1.0	0.20	0.50
P-Bromofluorobenzene		71.4	%					
Toluene-d8		94.4	%					
1,2-Dichloroethane-d4		112.	%					
Dibromofluoromethane		105.	%					

600 Technology Way
P.O. Box 540, Scarborough, ME 04070
Tel:(207) 874-2400 Fax:(207) 775-4029

http://www.katahdinlab.com

Katahdin
ANALYTICAL SERVICES

Cert No E87604

Report of Analytical Results

Client: Tetra Tech NUS, Inc.
Lab ID: SD3855-5
Client ID: DA-TB07-063010
Project: CTO WE19 NS Newport, SW
SDG: WE19-3

Sample Date: 30-JUN-10
Received Date: 01-JUL-10
Extract Date: 09-JUL-10
Extracted By: HCG
Extraction Method:
Lab Prep Batch: WG79497

Analysis Date: 09-JUL-10
Analyst: HCG
Analysis Method: SW846 8260B
Matrix: AQ
% Solids: NA
Report Date: 20-JUL-10

Compound	Qualifier	Result	Units	Dilution	LOQ	ADJ LOQ	ADJ MDL	ADJ LOD
Dichlorodifluoromethane	U	1.0	ug/L	1	2	2.0	0.24	1.0
Chloromethane	U	1.0	ug/L	1	2	2.0	0.36	1.0
Vinyl Chloride	U	1.0	ug/L	1	2	2.0	0.25	1.0
Bromomethane	U	1.0	ug/L	1	2	2.0	0.49	1.0
Chloroethane	U	1.0	ug/L	1	2	2.0	0.55	1.0
Trichlorofluoromethane	U	1.0	ug/L	1	2	2.0	0.24	1.0
1,1-Dichloroethene	U	0.50	ug/L	1	1	1.0	0.35	0.50
Carbon Disulfide	U	0.50	ug/L	1	1	1.0	0.25	0.50
Methylene Chloride	U	2.5	ug/L	1	5	5.0	1.1	2.5
Acetone	U	2.5	ug/L	1	5	5.0	2.2	2.5
trans-1,2-Dichloroethene	U	0.50	ug/L	1	1	1.0	0.25	0.50
Methyl tert-butyl Ether	U	0.50	ug/L	1	1	1.0	0.36	0.50
1,1-Dichloroethane	U	0.50	ug/L	1	1	1.0	0.21	0.50
cis-1,2-Dichloroethene	U	0.50	ug/L	1	1	1.0	0.21	0.50
2,2-Dichloropropane	U	0.50	ug/L	1	1	1.0	0.25	0.50
Bromochloromethane	U	0.50	ug/L	1	1	1.0	0.21	0.50
Chloroform	U	0.50	ug/L	1	1	1.0	0.32	0.50
Carbon Tetrachloride	U	0.50	ug/L	1	1	1.0	0.22	0.50
1,1,1-Trichloroethane	U	0.50	ug/L	1	1	1.0	0.20	0.50
1,1-Dichloropropene	U	0.50	ug/L	1	1	1.0	0.21	0.50
2-Butanone	U	2.5	ug/L	1	5	5.0	1.3	2.5
Benzene	U	0.50	ug/L	1	1	1.0	0.26	0.50
1,2-Dichloroethane	U	0.50	ug/L	1	1	1.0	0.20	0.50
Trichloroethene	U	0.50	ug/L	1	1	1.0	0.28	0.50
Dibromomethane	U	0.50	ug/L	1	1	1.0	0.46	0.50
1,2-Dichloropropane	U	0.50	ug/L	1	1	1.0	0.25	0.50
Bromodichloromethane	U	0.50	ug/L	1	1	1.0	0.33	0.50
cis-1,3-Dichloropropene	U	0.50	ug/L	1	1	1.0	0.19	0.50
Toluene	U	0.50	ug/L	1	1	1.0	0.27	0.50
4-Methyl-2-Pentanone	U	2.5	ug/L	1	5	5.0	1.3	2.5
Tetrachloroethene	U	0.50	ug/L	1	1	1.0	0.40	0.50
trans-1,3-Dichloropropene	U	0.50	ug/L	1	1	1.0	0.20	0.50
1,1,2-Trichloroethane	U	0.50	ug/L	1	1	1.0	0.33	0.50
Dibromochloromethane	U	0.50	ug/L	1	1	1.0	0.30	0.50
1,3-Dichloropropane	U	0.50	ug/L	1	1	1.0	0.22	0.50

600 Technology Way
P.O. Box 540, Scarborough, ME 04070
Tel:(207) 874-2400 Fax:(207) 775-4029

Report of Analytical Results

Client: Tetra Tech NUS, Inc.
Lab ID: SD3782-3
Client ID: DA-MW-DUP01-062810
Project: CTO WE19 NS Newport, SW
SDG: WE19-3

Sample Date: 28-JUN-10
Received Date: 29-JUN-10
Extract Date: 06-JUL-10
Extracted By: HCG
Extraction Method:
Lab Prep Batch: WG79391

Analysis Date: 06-JUL-10
Analyst: HCG
Analysis Method: SW846 8260B
Matrix: AQ
% Solids: NA
Report Date: 20-JUL-10

Compound	Qualifier	Result	Units	Dilution	LOQ	ADJ LOQ	ADJ MDL	ADJ LOD
1,2-Dibromoethane	U	0.50	ug/L	1	1	1.0	0.22	0.50
2-Hexanone	U	2.5	ug/L	1	5	5.0	1.7	2.5
Chlorobenzene	U	0.50	ug/L	1	1	1.0	0.22	0.50
Ethylbenzene	U	0.50	ug/L	1	1	1.0	0.21	0.50
1,1,1,2-Tetrachloroethane	U	0.50	ug/L	1	1	1.0	0.19	0.50
m+p-Xylenes	U	1.0	ug/L	1	2	2.0	0.59	1.0
o-Xylene	U	0.50	ug/L	1	1	1.0	0.25	0.50
Styrene	U	0.50	ug/L	1	1	1.0	0.23	0.50
Bromoform	U	0.50	ug/L	1	1	1.0	0.23	0.50
Isopropylbenzene	U	0.50	ug/L	1	1	1.0	0.23	0.50
Bromobenzene	U	0.50	ug/L	1	1	1.0	0.24	0.50
N-Propylbenzene	U	0.50	ug/L	1	1	1.0	0.26	0.50
1,1,2,2-Tetrachloroethane	U	0.50	ug/L	1	1	1.0	0.38	0.50
1,3,5-Trimethylbenzene	U	0.50	ug/L	1	1	1.0	0.20	0.50
2-Chlorotoluene	U	0.50	ug/L	1	1	1.0	0.20	0.50
1,2,3-Trichloropropane	U	0.50	ug/L	1	1	1.0	0.19	0.50
4-Chlorotoluene	U	0.50	ug/L	1	1	1.0	0.26	0.50
tert-Butylbenzene	U	0.50	ug/L	1	1	1.0	0.31	0.50
1,2,4-Trimethylbenzene	U	0.50	ug/L	1	1	1.0	0.19	0.50
P-Isopropyltoluene	U	0.50	ug/L	1	1	1.0	0.25	0.50
1,3-Dichlorobenzene	U	0.50	ug/L	1	1	1.0	0.26	0.50
1,4-Dichlorobenzene	U	0.50	ug/L	1	1	1.0	0.24	0.50
N-Butylbenzene	U	0.50	ug/L	1	1	1.0	0.23	0.50
sec-Butylbenzene	U	0.50	ug/L	1	1	1.0	0.21	0.50
1,2-Dichlorobenzene	U	0.50	ug/L	1	1	1.0	0.15	0.50
1,2-Dibromo-3-Chloropropane	U	0.75	ug/L	1	1	1.0	0.50	0.75
Hexachlorobutadiene	U	0.50	ug/L	1	1	1.0	0.52	0.50
1,2,4-Trichlorobenzene	U	0.50	ug/L	1	1	1.0	0.37	0.50
1,2,3-Trichlorobenzene	U	0.50	ug/L	1	1	1.0	0.20	0.50
P-Bromofluorobenzene		99.6	%					
Toluene-d8		111.	%					
1,2-Dichloroethane-d4		108.	%					
Dibromofluoromethane		108.	%					

600 Technology Way
P.O. Box 540, Scarborough, ME 04070
Tel:(207) 874-2400 Fax:(207) 775-4029

Report of Analytical Results

Client: Tetra Tech NUS, Inc.
Lab ID: SD3782-3DL
Client ID: DA-MW-DUP01-062810
Project: CTO WE19 NS Newport, SW
SDG: WE19-3

Sample Date: 28-JUN-10
Received Date: 29-JUN-10
Extract Date: 07-JUL-10
Extracted By: HCG
Extraction Method:
Lab Prep Batch: WG79439

Analysis Date: 07-JUL-10
Analyst: HCG
Analysis Method: SW846 8260B
Matrix: AQ
% Solids: NA
Report Date: 20-JUL-10

Compound	Qualifier	Result	Units	Dilution	LOQ	ADJ LOQ	ADJ MDL	ADJ LOD
Dichlorodifluoromethane	U	2.0	ug/L	2	2	4.0	0.48	2.0
Chloromethane	U	2.0	ug/L	2	2	4.0	0.72	2.0
Vinyl Chloride	U	2.0	ug/L	2	2	4.0	0.50	2.0
Bromomethane	U	2.0	ug/L	2	2	4.0	0.98	2.0
Chloroethane	U	2.0	ug/L	2	2	4.0	1.1	2.0
Trichlorofluoromethane	U	2.0	ug/L	2	2	4.0	0.48	2.0
1,1-Dichloroethene	J	0.80	ug/L	2	1	2.0	0.70	1.0
Carbon Disulfide	U	1.0	ug/L	2	1	2.0	0.50	1.0
Methylene Chloride	U	5.0	ug/L	2	5	10.	2.3	5.0
Acetone	U	5.0	ug/L	2	5	10.	4.4	5.0
trans-1,2-Dichloroethene	U	1.0	ug/L	2	1	2.0	0.50	1.0
Methyl tert-butyl Ether	U	1.0	ug/L	2	1	2.0	0.72	1.0
1,1-Dichloroethane		4.0	ug/L	2	1	2.0	0.42	1.0
cis-1,2-Dichloroethene	J	1.8	ug/L	2	1	2.0	0.42	1.0
2,2-Dichloropropane	U	1.0	ug/L	2	1	2.0	0.50	1.0
Bromochloromethane	U	1.0	ug/L	2	1	2.0	0.42	1.0
Chloroform	J	0.69	ug/L	2	1	2.0	0.64	1.0
Carbon Tetrachloride		2.2	ug/L	2	1	2.0	0.44	1.0
1,1,1-Trichloroethane		2.6	ug/L	2	1	2.0	0.40	1.0
1,1-Dichloropropene	U	1.0	ug/L	2	1	2.0	0.42	1.0
2-Butanone	U	5.0	ug/L	2	5	10.	2.6	5.0
Benzene	U	1.0	ug/L	2	1	2.0	0.52	1.0
1,2-Dichloroethane	U	1.0	ug/L	2	1	2.0	0.40	1.0
Trichloroethene		200	ug/L	2	1	2.0	0.56	1.0
Dibromomethane	U	1.0	ug/L	2	1	2.0	0.92	1.0
1,2-Dichloropropane	U	1.0	ug/L	2	1	2.0	0.50	1.0
Bromodichloromethane	U	1.0	ug/L	2	1	2.0	0.66	1.0
cis-1,3-Dichloropropene	U	1.0	ug/L	2	1	2.0	0.38	1.0
Toluene	U	1.0	ug/L	2	1	2.0	0.54	1.0
4-Methyl-2-Pentanone	U	5.0	ug/L	2	5	10.	2.6	5.0
Tetrachloroethene	J	1.8	ug/L	2	1	2.0	0.80	1.0
trans-1,3-Dichloropropene	U	1.0	ug/L	2	1	2.0	0.40	1.0
1,1,2-Trichloroethane	U	1.0	ug/L	2	1	2.0	0.66	1.0
Dibromochloromethane	U	1.0	ug/L	2	1	2.0	0.60	1.0
1,3-Dichloropropane	U	1.0	ug/L	2	1	2.0	0.44	1.0

600 Technology Way
P.O. Box 540, Scarborough, ME 04070
Tel:(207) 874-2400 Fax:(207) 775-4029

Report of Analytical Results

Client: Tetra Tech NUS, Inc.
Lab ID: SD3855-5
Client ID: DA-TB07-063010
Project: CTO WE19 NS Newport, SW
SDG: WE19-3

Sample Date: 30-JUN-10
Received Date: 01-JUL-10
Extract Date: 09-JUL-10
Extracted By: HCG
Extraction Method:
Lab Prep Batch: WG79497

Analysis Date: 09-JUL-10
Analyst: HCG
Analysis Method: SW846 8260B
Matrix: AQ
% Solids: NA
Report Date: 20-JUL-10

Compound	Qualifier	Result	Units	Dilution	LOQ	ADJ LOQ	ADJ MDL	ADJ LOD
1,2-Dibromoethane	U	0.50	ug/L	1	1	1.0	0.22	0.50
2-Hexanone	U	2.5	ug/L	1	5	5.0	1.7	2.5
Chlorobenzene	U	0.50	ug/L	1	1	1.0	0.22	0.50
Ethylbenzene	U	0.50	ug/L	1	1	1.0	0.21	0.50
1,1,1,2-Tetrachloroethane	U	0.50	ug/L	1	1	1.0	0.19	0.50
m+p-Xylenes	U	1.0	ug/L	1	2	2.0	0.59	1.0
o-Xylene	U	0.50	ug/L	1	1	1.0	0.25	0.50
Styrene	U	0.50	ug/L	1	1	1.0	0.23	0.50
Bromoform	U	0.50	ug/L	1	1	1.0	0.23	0.50
Isopropylbenzene	U	0.50	ug/L	1	1	1.0	0.23	0.50
Bromobenzene	U	0.50	ug/L	1	1	1.0	0.24	0.50
N-Propylbenzene	U	0.50	ug/L	1	1	1.0	0.26	0.50
1,1,2,2-Tetrachloroethane	U	0.50	ug/L	1	1	1.0	0.38	0.50
1,3,5-Trimethylbenzene	U	0.50	ug/L	1	1	1.0	0.20	0.50
2-Chlorotoluene	U	0.50	ug/L	1	1	1.0	0.20	0.50
1,2,3-Trichloropropane	U	0.50	ug/L	1	1	1.0	0.19	0.50
4-Chlorotoluene	U	0.50	ug/L	1	1	1.0	0.26	0.50
tert-Butylbenzene	U	0.50	ug/L	1	1	1.0	0.31	0.50
1,2,4-Trimethylbenzene	U	0.50	ug/L	1	1	1.0	0.19	0.50
P-Isopropyltoluene	U	0.50	ug/L	1	1	1.0	0.25	0.50
1,3-Dichlorobenzene	U	0.50	ug/L	1	1	1.0	0.26	0.50
1,4-Dichlorobenzene	U	0.50	ug/L	1	1	1.0	0.24	0.50
N-Butylbenzene	U	0.50	ug/L	1	1	1.0	0.23	0.50
sec-Butylbenzene	U	0.50	ug/L	1	1	1.0	0.21	0.50
1,2-Dichlorobenzene	U	0.50	ug/L	1	1	1.0	0.15	0.50
1,2-Dibromo-3-Chloropropane	U	0.75	ug/L	1	1	1.0	0.50	0.75
Hexachlorobutadiene	U	0.50	ug/L	1	1	1.0	0.52	0.50
1,2,4-Trichlorobenzene	U	0.50	ug/L	1	1	1.0	0.37	0.50
1,2,3-Trichlorobenzene	U	0.50	ug/L	1	1	1.0	0.20	0.50
P-Bromofluorobenzene		71.0	%					
Toluene-d8		95.8	%					
1,2-Dichloroethane-d4		105.	%					
Dibromofluoromethane		100.	%					

600 Technology Way
P.O. Box 540, Scarborough, ME 04070
Tel:(207) 874-2400 Fax:(207) 775-4029

http://www.katahdinlab.com

Report of Analytical Results

Client: Tetra Tech NUS, Inc.
Lab ID: SD3897-3
Client ID: DA-FB01-070110
Project: CTO WE19 NS Newport, SW
SDG: WE19-3

Sample Date: 01-JUL-10
Received Date: 02-JUL-10
Extract Date: 06-JUL-10
Extracted By: WS
Extraction Method: SW846 3520
Lab Prep Batch: WG79372

Analysis Date: 07-JUL-10
Analyst: JCG
Analysis Method: SW846 M8270C
Matrix: AQ
% Solids: NA
Report Date: 15-JUL-10

Compound	Qualifier	Result	Units	Dilution	LOQ	ADJ LOQ	ADJ MDL	ADJ LOD
1,4-Dioxane	J	0.094	ug/L	1	1	0.98	0.028	0.49
2-Methylnaphthalene-D10		90.4	%					

600 Technology Way
P.O. Box 540, Scarborough, ME 04070
Tel:(207) 874-2400 Fax:(207) 775-4029

http://www.katahdinlab.com

Report of Analytical Results

Client: Tetra Tech NUS, Inc.
Lab ID: SD3897-2
Client ID: DA-GW-RB01-070110
Project: CTO WE19 NS Newport, SW
SDG: WE19-3

Sample Date: 01-JUL-10
Received Date: 02-JUL-10
Extract Date: 06-JUL-10
Extracted By: WS
Extraction Method: SW846 3520
Lab Prep Batch: WG79372

Analysis Date: 07-JUL-10
Analyst: JCG
Analysis Method: SW846 M8270C
Matrix: AQ
% Solids: NA
Report Date: 15-JUL-10

Compound	Qualifier	Result	Units	Dilution	LOQ	ADJ LOQ	ADJ MDL	ADJ LOD
1,4-Dioxane	U	0.48	ug/L	1	1	0.95	0.028	0.48
2-Methylnaphthalene-D10		67.7	%					

600 Technology Way
P.O. Box 540, Scarborough, ME 04070
Tel:(207) 874-2400 Fax:(207) 775-4029

http://www.katahdinlab.com

Katahdin
ANALYTICAL SERVICES

ACCREDITED IN ACCORDANCE WITH nelac
Cert No E87604

Report of Analytical Results

Client: Tetra Tech NUS, Inc.
Lab ID: SD3782-2
Client ID: DA-MW-03B-062810
Project: CTO WE19 NS Newport, SW
SDG: WE19-3

Sample Date: 28-JUN-10
Received Date: 29-JUN-10
Extract Date: 30-JUN-10
Extracted By: KF
Extraction Method: SW846 3520
Lab Prep Batch: WG79145

Analysis Date: 06-JUL-10
Analyst: JCG
Analysis Method: SW846 M8270C
Matrix: AQ
% Solids: NA
Report Date: 15-JUL-10

Compound	Qualifier	Result	Units	Dilution	LOQ	ADJ LOQ	ADJ MDL	ADJ LOD
1,4-Dioxane	J	0.088	ug/L	1	1	0.95	0.028	0.48
2-Methylnaphthalene-D10		68.2	%					

600 Technology Way
P.O. Box 540, Scarborough, ME 04070
Tel:(207) 874-2400 Fax:(207) 775-4029

Report of Analytical Results

Client: Tetra Tech NUS, Inc.
Lab ID: SD3855-1
Client ID: DA-MW-04B-063010
Project: CTO WE19 NS Newport, SW
SDG: WE19-3

Sample Date: 30-JUN-10
Received Date: 01-JUL-10
Extract Date: 06-JUL-10
Extracted By: WS
Extraction Method: SW846 3520
Lab Prep Batch: WG79372

Analysis Date: 07-JUL-10
Analyst: JCG
Analysis Method: SW846 M8270C
Matrix: AQ
% Solids: NA
Report Date: 15-JUL-10

Compound	Qualifier	Result	Units	Dilution	LOQ	ADJ LOQ	ADJ MDL	ADJ LOD
1,4-Dioxane	J	0.19	ug/L	1	1	1.0	0.030	0.51
2-Methylnaphthalene-D10		46.6	%					

600 Technology Way
P.O. Box 540, Scarborough, ME 04070
Tel:(207) 874-2400 Fax:(207) 775-4029

http://www.katahdinlab.com

Report of Analytical Results

Client: Tetra Tech NUS, Inc.
Lab ID: SD3822-1DL
Client ID: DA-MW-09B-062910
Project: CTO WE19 NS Newport, SW
SDG: WE19-3

Sample Date: 29-JUN-10
Received Date: 30-JUN-10
Extract Date: 01-JUL-10
Extracted By: KF
Extraction Method: SW846 3520
Lab Prep Batch: WG79223

Analysis Date: 07-JUL-10
Analyst: JCG
Analysis Method: SW846 M8270C
Matrix: AQ
% Solids: NA
Report Date: 16-JUL-10

Compound	Qualifier	Result	Units	Dilution	LOQ	ADJ LOQ	ADJ MDL	ADJ LOD
1,4-Dioxane		8.3	ug/L	2	1	1.9	0.055	0.94
2-Methylnaphthalene-D10		80.0	%					

600 Technology Way
P.O. Box 540, Scarborough, ME 04070
Tel:(207) 874-2400 Fax:(207) 775-4029

Katahdin
ANALYTICAL SERVICES

Cert No E87604

Report of Analytical Results

Client: Tetra Tech NUS, Inc.
Lab ID: SD3897-1
Client ID: DA-MW-103B-070110
Project: CTO WE19 NS Newport, SW
SDG: WE19-3

Sample Date: 01-JUL-10
Received Date: 02-JUL-10
Extract Date: 06-JUL-10
Extracted By: WS
Extraction Method: SW846 3520
Lab Prep Batch: WG79372

Analysis Date: 07-JUL-10
Analyst: JCG
Analysis Method: SW846 M8270C
Matrix: AQ
% Solids: NA
Report Date: 15-JUL-10

Compound	Qualifier	Result	Units	Dilution	LOQ	ADJ LOQ	ADJ MDL	ADJ LOD
1,4-Dioxane		3.2	ug/L	1	1	0.94	0.027	0.47
2-Methylnaphthalene-D10		76.6	%					

600 Technology Way
P.O. Box 540, Scarborough, ME 04070
Tel:(207) 874-2400 Fax:(207) 775-4029

http://www.katahdinlab.com

Katahdin
ANALYTICAL SERVICES

Cert No E87604

Report of Analytical Results

Client: Tetra Tech NUS, Inc.
Lab ID: SD3782-1
Client ID: DA-MW-105B-062810
Project: CTO WE19 NS Newport, SW
SDG: WE19-3

Sample Date: 28-JUN-10
Received Date: 29-JUN-10
Extract Date: 30-JUN-10
Extracted By: KF
Extraction Method: SW846 3520
Lab Prep Batch: WG79145

Analysis Date: 06-JUL-10
Analyst: JCG
Analysis Method: SW846 M8270C
Matrix: AQ
% Solids: NA
Report Date: 15-JUL-10

Compound	Qualifier	Result	Units	Dilution	LOQ	ADJ LOQ	ADJ MDL	ADJ LOD
1,4-Dioxane	J	1.0	ug/L	1	1	1.0	0.029	0.50
2-Methylnaphthalene-D10		62.5	%					

600 Technology Way
P.O. Box 540, Scarborough, ME 04070
Tel:(207) 874-2400 Fax:(207) 775-4029

http://www.katahdinlab.com

Report of Analytical Results

Client: Tetra Tech NUS, Inc.
Lab ID: SD3822-3
Client ID: DA-MW-11-062910
Project: CTO WE19 NS Newport, SW
SDG: WE19-3

Sample Date: 29-JUN-10
Received Date: 30-JUN-10
Extract Date: 01-JUL-10
Extracted By: KF
Extraction Method: SW846 3520
Lab Prep Batch: WG79223

Analysis Date: 06-JUL-10
Analyst: JCG
Analysis Method: SW846 M8270C
Matrix: AQ
% Solids: NA
Report Date: 15-JUL-10

Compound	Qualifier	Result	Units	Dilution	LOQ	ADJ LOQ	ADJ MDL	ADJ LOD
1,4-Dioxane	U	0.48	ug/L	1	1	0.95	0.028	0.48
2-Methylnaphthalene-D10		88.6	%					

600 Technology Way
P.O. Box 540, Scarborough, ME 04070
Tel:(207) 874-2400 Fax:(207) 775-4029

http://www.katahdinlab.com

Report of Analytical Results

Client: Tetra Tech NUS, Inc.
Lab ID: SD3855-4
Client ID: DA-MW-12-063010
Project: CTO WE19 NS Newport, SW
SDG: WE19-3

Sample Date: 30-JUN-10
Received Date: 01-JUL-10
Extract Date: 06-JUL-10
Extracted By: WS
Extraction Method: SW846 3520
Lab Prep Batch: WG79372

Analysis Date: 07-JUL-10
Analyst: JCG
Analysis Method: SW846 M8270C
Matrix: AQ
% Solids: NA
Report Date: 15-JUL-10

Compound	Qualifier	Result	Units	Dilution	LOQ	ADJ LOQ	ADJ MDL	ADJ LOD
1,4-Dioxane	U	0.48	ug/L	1	1	0.96	0.028	0.48
2-Methylnaphthalene-D10		67.6	%					

600 Technology Way
P.O. Box 540, Scarborough, ME 04070
Tel:(207) 874-2400 Fax:(207) 775-4029

http://www.katahdinlab.com

Katahdin
ANALYTICAL SERVICES

Accredited in accordance with nelac
Cert No E87604

Report of Analytical Results

Client: Tetra Tech NUS, Inc.
Lab ID: SD3855-2
Client ID: DA-MW-122-063010
Project: CTO WE19 NS Newport, SW
SDG: WE19-3

Sample Date: 30-JUN-10
Received Date: 01-JUL-10
Extract Date: 06-JUL-10
Extracted By: WS
Extraction Method: SW846 3520
Lab Prep Batch: WG79372

Analysis Date: 07-JUL-10
Analyst: JCG
Analysis Method: SW846 M8270C
Matrix: AQ
% Solids: NA
Report Date: 15-JUL-10

Compound	Qualifier	Result	Units	Dilution	LOQ	ADJ LOQ	ADJ MDL	ADJ LOD
1,4-Dioxane	U	0.48	ug/L	1	1	0.95	0.028	0.48
2-Methylnaphthalene-D10		68.4	%					

600 Technology Way
P.O. Box 540, Scarborough, ME 04070
Tel:(207) 874-2400 Fax:(207) 775-4029

http://www.katahdinlab.com

Report of Analytical Results

Client: Tetra Tech NUS, Inc.
Lab ID: SD3855-3
Client ID: DA-MW-13B-063010
Project: CTO WE19 NS Newport, SW
SDG: WE19-3

Sample Date: 30-JUN-10
Received Date: 01-JUL-10
Extract Date: 06-JUL-10
Extracted By: WS
Extraction Method: SW846 3520
Lab Prep Batch: WG79372

Analysis Date: 07-JUL-10
Analyst: JCG
Analysis Method: SW846 M8270C
Matrix: AQ
% Solids: NA
Report Date: 15-JUL-10

Compound	Qualifier	Result	Units	Dilution	LOQ	ADJ LOQ	ADJ MDL	ADJ LOD
1,4-Dioxane	U	0.48	ug/L	1	1	0.95	0.028	0.48
2-Methylnaphthalene-D10		78.6	%					

600 Technology Way
P.O. Box 540, Scarborough, ME 04070
Tel:(207) 874-2400 Fax:(207) 775-4029

http://www.katahdinlab.com

Katahdin
ANALYTICAL SERVICES

Accredited in accordance with nelac
Cert No E87604

Report of Analytical Results

Client: Tetra Tech NUS, Inc.
Lab ID: SD3782-3
Client ID: DA-MW-DUP01-062810
Project: CTO WE19 NS Newport, SW
SDG: WE19-3

Sample Date: 28-JUN-10
Received Date: 29-JUN-10
Extract Date: 30-JUN-10
Extracted By: KF
Extraction Method: SW846 3520
Lab Prep Batch: WG79145

Analysis Date: 06-JUL-10
Analyst: JCG
Analysis Method: SW846 M8270C
Matrix: AQ
% Solids: NA
Report Date: 15-JUL-10

Compound	Qualifier	Result	Units	Dilution	LOQ	ADJ LOQ	ADJ MDL	ADJ LOD
1,4-Dioxane	J	0.12	ug/L	1	1	0.95	0.028	0.48
2-Methylnaphthalene-D10		67.9	%					

600 Technology Way
P.O. Box 540, Scarborough, ME 04070
Tel:(207) 874-2400 Fax:(207) 775-4029

http://www.katahdinlab.com

Report of Analytical Results

Client: Tetra Tech NUS, Inc.
Lab ID: SD3822-4
Client ID: DA-MW-DUP02-062910
Project: CTO WE19 NS Newport, SW
SDG: WE19-3

Sample Date: 29-JUN-10
Received Date: 30-JUN-10
Extract Date: 01-JUL-10
Extracted By: KF
Extraction Method: SW846 3520
Lab Prep Batch: WG79223

Analysis Date: 06-JUL-10
Analyst: JCG
Analysis Method: SW846 M8270C
Matrix: AQ
% Solids: NA
Report Date: 15-JUL-10

Compound	Qualifier	Result	Units	Dilution	LOQ	ADJ LOQ	ADJ MDL	ADJ LOD
1,4-Dioxane	U	0.47	ug/L	1	1	0.94	0.027	0.47
2-Methylnaphthalene-D10		49.6	%					

600 Technology Way
P.O. Box 540, Scarborough, ME 04070
Tel:(207) 874-2400 Fax:(207) 775-4029

http://www.katahdinlab.com

Katahdin
ANALYTICAL SERVICES

Cert No E87604

Report of Analytical Results

Client: Tetra Tech NUS, Inc.
Lab ID: SD3782-2
Client ID: DA-MW-03B-062810
Project: CTO WE19 NS Newport, SW
SDG: WE19-3

Sample Date: 28-JUN-10
Received Date: 29-JUN-10
Extract Date: 08-JUL-10
Extracted By: EKC
Extraction Method:
Lab Prep Batch: WG79461

Analysis Date: 08-JUL-10
Analyst: EKC
Analysis Method: RSK SOP 175
Matrix: AQ
% Solids: NA
Report Date: 21-JUL-10

Compound	Qualifier	Result	Units	Dilution	LOQ	ADJ LOQ	ADJ MDL	ADJ LOD
Methane	J	1.8	ug/L	1	10	10.	0.68	2.0
Ethane	U	2.0	ug/L	1	10	10.	0.58	2.0
Ethene	U	2.0	ug/L	1	10	10.	0.69	2.0

600 Technology Way
P.O. Box 540, Scarborough, ME 04070
Tel:(207) 874-2400 Fax:(207) 775-4029

http://www.katahdinlab.com

Katahdin
ANALYTICAL SERVICES

Cert No E87604

Report of Analytical Results

Client: Tetra Tech NUS, Inc.
Lab ID: SD3822-1
Client ID: DA-MW-09B-062910
Project: CTO WE19 NS Newport, SW
SDG: WE19-3

Sample Date: 29-JUN-10
Received Date: 30-JUN-10
Extract Date: 08-JUL-10
Extracted By: EKC
Extraction Method:
Lab Prep Batch: WG79461

Analysis Date: 08-JUL-10
Analyst: EKC
Analysis Method: RSK SOP 175
Matrix: AQ
% Solids: NA
Report Date: 21-JUL-10

Compound	Qualifier	Result	Units	Dilution	LOQ	ADJ LOQ	ADJ MDL	ADJ LOD
Methane	E	5800	ug/L	1	10	10.	0.68	2.0
Ethane	J	3.5	ug/L	1	10	10.	0.58	2.0
Ethene	U	2.0	ug/L	1	10	10.	0.69	2.0

600 Technology Way
P.O. Box 540, Scarborough, ME 04070
Tel:(207) 874-2400 Fax:(207) 775-4029

http://www.katahdinlab.com

Report of Analytical Results

Client: Tetra Tech NUS, Inc.
Lab ID: SD3822-1DL
Client ID: DA-MW-09B-062910
Project: CTO WE19 NS Newport, SW
SDG: WE19-3

Sample Date: 29-JUN-10
Received Date: 30-JUN-10
Extract Date: 08-JUL-10
Extracted By: EKC
Extraction Method:
Lab Prep Batch: WG79461

Analysis Date: 08-JUL-10
Analyst: EKC
Analysis Method: RSK SOP 175
Matrix: AQ
% Solids: NA
Report Date: 21-JUL-10

Compound	Qualifier	Result	Units	Dilution	LOQ	ADJ LOQ	ADJ MDL	ADJ LOD
Methane		6000	ug/L	10	10	100	6.8	20.
Ethane	U	20.	ug/L	10	10	100	5.8	20.
Ethene	U	20.	ug/L	10	10	100	6.9	20.

600 Technology Way
P.O. Box 540, Scarborough, ME 04070
Tel:(207) 874-2400 Fax:(207) 775-4029

http://www.katahdinlab.com

Katahdin
ANALYTICAL SERVICES

Cert No E87604

Report of Analytical Results

Client: Tetra Tech NUS, Inc.
Lab ID: SD3897-1
Client ID: DA-MW-103B-070110
Project: CTO WE19 NS Newport, SW
SDG: WE19-3

Sample Date: 01-JUL-10
Received Date: 02-JUL-10
Extract Date: 08-JUL-10
Extracted By: EKC
Extraction Method:
Lab Prep Batch: WG79461

Analysis Date: 08-JUL-10
Analyst: EKC
Analysis Method: RSK SOP 175
Matrix: AQ
% Solids: NA
Report Date: 21-JUL-10

Compound	Qualifier	Result	Units	Dilution	LOQ	ADJ LOQ	ADJ MDL	ADJ LOD
Methane		73.	ug/L	1	10	10.	0.68	2.0
Ethane	U	2.0	ug/L	1	10	10.	0.58	2.0
Ethene	U	2.0	ug/L	1	10	10.	0.69	2.0

600 Technology Way
P.O. Box 540, Scarborough, ME 04070
Tel:(207) 874-2400 Fax:(207) 775-4029

http://www.katahdinlab.com

Katahdin
ANALYTICAL SERVICES

Accredited in accordance with nelac
Cert No E87604

Report of Analytical Results

Client: Tetra Tech NUS, Inc.
Lab ID: SD3782-1
Client ID: DA-MW-105B-062810
Project: CTO WE19 NS Newport, SW
SDG: WE19-3

Sample Date: 28-JUN-10
Received Date: 29-JUN-10
Extract Date: 08-JUL-10
Extracted By: EKC
Extraction Method:
Lab Prep Batch: WG79461

Analysis Date: 08-JUL-10
Analyst: EKC
Analysis Method: RSK SOP 175
Matrix: AQ
% Solids: NA
Report Date: 21-JUL-10

Compound	Qualifier	Result	Units	Dilution	LOQ	ADJ LOQ	ADJ MDL	ADJ LOD
Methane		110	ug/L	1	10	10.	0.68	2.0
Ethane	U	2.0	ug/L	1	10	10.	0.58	2.0
Ethene	U	2.0	ug/L	1	10	10.	0.69	2.0

600 Technology Way
P.O. Box 540, Scarborough, ME 04070
Tel:(207) 874-2400 Fax:(207) 775-4029

http://www.katahdinlab.com

Report of Analytical Results

Client: Tetra Tech NUS, Inc.
Lab ID: SD3822-3
Client ID: DA-MW-11-062910
Project: CTO WE19 NS Newport, SW
SDG: WE19-3

Sample Date: 29-JUN-10
Received Date: 30-JUN-10
Extract Date: 08-JUL-10
Extracted By: EKC
Extraction Method:
Lab Prep Batch: WG79461

Analysis Date: 08-JUL-10
Analyst: EKC
Analysis Method: RSK SOP 175
Matrix: AQ
% Solids: NA
Report Date: 21-JUL-10

Compound	Qualifier	Result	Units	Dilution	LOQ	ADJ LOQ	ADJ MDL	ADJ LOD
Methane		87.	ug/L	1	10	10.	0.68	2.0
Ethane	U	2.0	ug/L	1	10	10.	0.58	2.0
Ethene	U	2.0	ug/L	1	10	10.	0.69	2.0

600 Technology Way
P.O. Box 540, Scarborough, ME 04070
Tel:(207) 874-2400 Fax:(207) 775-4029

http://www.katahdinlab.com

Katahdin
ANALYTICAL SERVICES

Accredited in accordance with nelac
Cert No E87604

Report of Analytical Results

Client: Tetra Tech NUS, Inc.
Lab ID: SD3855-4
Client ID: DA-MW-12-063010
Project: CTO WE19 NS Newport, SW
SDG: WE19-3

Sample Date: 30-JUN-10
Received Date: 01-JUL-10
Extract Date: 08-JUL-10
Extracted By: EKC
Extraction Method:
Lab Prep Batch: WG79461

Analysis Date: 08-JUL-10
Analyst: EKC
Analysis Method: RSK SOP 175
Matrix: AQ
% Solids: NA
Report Date: 21-JUL-10

Compound	Qualifier	Result	Units	Dilution	LOQ	ADJ LOQ	ADJ MDL	ADJ LOD
Methane	J	5.9	ug/L	1	10	10.	0.68	2.0
Ethane	U	2.0	ug/L	1	10	10.	0.58	2.0
Ethene	U	2.0	ug/L	1	10	10.	0.69	2.0

600 Technology Way
P.O. Box 540, Scarborough, ME 04070
Tel:(207) 874-2400 Fax:(207) 775-4029

Katahdin
ANALYTICAL SERVICES

Cert No E87604

Report of Analytical Results

Client: Tetra Tech NUS, Inc.
Lab ID: SD3782-3
Client ID: DA-MW-DUP01-062810
Project: CTO WE19 NS Newport, SW
SDG: WE19-3

Sample Date: 28-JUN-10
Received Date: 29-JUN-10
Extract Date: 08-JUL-10
Extracted By: EKC
Extraction Method:
Lab Prep Batch: WG79461

Analysis Date: 08-JUL-10
Analyst: EKC
Analysis Method: RSK SOP 175
Matrix: AQ
% Solids: NA
Report Date: 21-JUL-10

Compound	Qualifier	Result	Units	Dilution	LOQ	ADJ LOQ	ADJ MDL	ADJ LOD
Methane	J	1.4	ug/L	1	10	10.	0.68	2.0
Ethane	U	2.0	ug/L	1	10	10.	0.58	2.0
Ethene	U	2.0	ug/L	1	10	10.	0.69	2.0

600 Technology Way
P.O. Box 540, Scarborough, ME 04070
Tel:(207) 874-2400 Fax:(207) 775-4029

http://www.katahdinlab.com

Katahdin
ANALYTICAL SERVICES

Cert No E87604

Report of Analytical Results

Client: Tetra Tech NUS, Inc.
Lab ID: SD3822-4
Client ID: DA-MW-DUP02-062910
Project: CTO WE19 NS Newport, SW
SDG: WE19-3

Sample Date: 29-JUN-10
Received Date: 30-JUN-10
Extract Date: 08-JUL-10
Extracted By: EKC
Extraction Method:
Lab Prep Batch: WG79461

Analysis Date: 08-JUL-10
Analyst: EKC
Analysis Method: RSK SOP 175
Matrix: AQ
% Solids: NA
Report Date: 21-JUL-10

Compound	Qualifier	Result	Units	Dilution	LOQ	ADJ LOQ	ADJ MDL	ADJ LOD
Methane		80.	ug/L	1	10	10.	0.68	2.0
Ethane	U	2.0	ug/L	1	10	10.	0.58	2.0
Ethene	U	2.0	ug/L	1	10	10.	0.69	2.0

600 Technology Way
P.O. Box 540, Scarborough, ME 04070
Tel:(207) 874-2400 Fax:(207) 775-4029

http://www.katahdinlab.com

Report of Analytical Results

Client: Lucy Guzman
Tetra Tech NUS
55 Jonspin Road
Wilmington,MA 01887-1020

Lab Sample ID: SD3897-2
Report Date: 23-JUL-10
Client PO: 1045366, 112G02124,
Project: CTO WE19 NS Newport,
SDG: WE19-3

Sample Description	Matrix	Date Sampled	Date Received
DA-GW-RB01-070110	AQ	01-JUL-10	02-JUL-10

Parameter	Result	Adj LOQ	Adj LOD	Anal. Method	QC.Batch	Anal. Date	Prep. Method	Prep. Date	Footnotes
Total Cyanide	U5.0 ug/L	10	5	SW846 M9012A	WG79431	07-JUL-10 13:37:35	SW846 M9012	07-JUL-10	

Report of Analytical Results

Client: Lucy Guzman
Tetra Tech NUS
55 Jonspin Road
Wilmington,MA 01887-1020

Lab Sample ID: SD3782-2
Report Date: 23-JUL-10
Client PO: 1045366, 112G02124,
Project: CTO WE19 NS Newport,
SDG: WE19-3

Sample Description	Matrix	Date Sampled	Date Received
DA-MW-03B-062810	AQ	28-JUN-10	29-JUN-10

Parameter	Result	Adj LOQ	Adj LOD	Anal. Method	QC.Batch	Anal. Date	Prep. Method	Prep. Date	Footnotes
Nitrate as N	0.69 mg/L	.05	.025	EPA 300.0	WG79229	29-JUN-10 12:21:00	N/A	N/A	
Nitrite as N	U0.025 mg/L	.05	.025	EPA 300.0	WG79229	29-JUN-10 12:21:00	N/A	N/A	
Nitrogen-Ammonia As N	U0.050 mg/L	.1	.05	EPA 350.1	WG79381	06-JUL-10 09:42:05	N/A	N/A	
Ortho-Phosphate	U0.050 mg/L	.1	.05	EPA 300.0	WG79229	29-JUN-10 12:21:00	N/A	N/A	
Sulfate	21. mg/L	2	1	EPA 300.0	WG79229	29-JUN-10 14:11:00	N/A	N/A	
Sulfide-Iodometric	2.5 mg/L	1	.8	SM4500S E	WG79272	29-JUN-10 08:30:00	N/A	N/A	
Total Organic Carbon	2.1 mg/L	1	.5	EPA 415.1	WG79524	07-JUL-10 20:39:14	N/A	N/A	

Report of Analytical Results

Client: Lucy Guzman
Tetra Tech NUS
55 Jonspin Road
Wilmington,MA 01887-1020

Lab Sample ID: SD3822-1
Report Date: 23-JUL-10
Client PO: 1045366, 112G02124,
Project: CTO WE19 NS Newport,
SDG: WE19-3

Sample Description	Matrix	Date Sampled	Date Received
DA-MW-09B-062910	AQ	29-JUN-10	30-JUN-10

Parameter	Result	Adj LOQ	Adj LOD	Anal. Method	QC.Batch	Anal. Date	Prep. Method	Prep. Date	Footnotes
Nitrate as N	J0.018 mg/L	.05	.025	EPA 300.0	WG79234	30-JUN-10 11:48:00	N/A	N/A	
Nitrite as N	U0.025 mg/L	.05	.025	EPA 300.0	WG79234	30-JUN-10 11:48:00	N/A	N/A	
Nitrogen-Ammonia As N	4.9 mg/L	.5	.25	EPA 350.1	WG79381	06-JUL-10 10:25:36	N/A	N/A	
Ortho-Phosphate	U0.050 mg/L	.1	.05	EPA 300.0	WG79234	30-JUN-10 11:48:00	N/A	N/A	
Sulfate	1.1 mg/L	1	.5	EPA 300.0	WG79234	30-JUN-10 11:48:00	N/A	N/A	
Sulfide-Iodometric	U0.80 mg/L	1	.8	SM4500S E	WG79328	01-JUL-10 16:10:00	N/A	N/A	
Total Cyanide	J5.6 ug/L	10	5	SW846 M9012A	WG79311	02-JUL-10 15:25:00	SW846 M9012	02-JUL-10	
Total Organic Carbon	2.8 mg/L	1	.5	EPA 415.1	WG79528	07-JUL-10 22:48:42	N/A	N/A	

Report of Analytical Results

Client: Lucy Guzman
Tetra Tech NUS
55 Jonspin Road
Wilmington,MA 01887-1020

Lab Sample ID: SD3897-1
Report Date: 23-JUL-10
Client PO: 1045366, 112G02124,
Project: CTO WE19 NS Newport,
SDG: WE19-3

Sample Description	Matrix	Date Sampled	Date Received
DA-MW-103B-070110	AQ	01-JUL-10	02-JUL-10

Parameter	Result	Adj LOQ	Adj LOD	Anal. Method	QC.Batch	Anal. Date	Prep. Method	Prep. Date	Footnotes
Nitrate as N	0.070 mg/L	.05	.025	EPA 300.0	WG79380	02-JUL-10 11:37:00	N/A	N/A	
Nitrite as N	U0.025 mg/L	.05	.025	EPA 300.0	WG79380	02-JUL-10 11:37:00	N/A	N/A	
Nitrogen-Ammonia As N	U0.050 mg/L	.1	.05	EPA 350.1	WG79382	06-JUL-10 11:01:03	N/A	N/A	
Ortho-Phosphate	U0.050 mg/L	.1	.05	EPA 300.0	WG79380	02-JUL-10 11:37:00	N/A	N/A	
Sulfate	8.1 mg/L	1	.5	EPA 300.0	WG79380	02-JUL-10 11:37:00	N/A	N/A	
Sulfide-Iodometric	U0.80 mg/L	1	.8	SM4500S E	WG79399	06-JUL-10 11:00:00	N/A	N/A	
Total Cyanide	U5.0 ug/L	10	5	SW846 M9012A	WG79431	07-JUL-10 13:37:34	SW846 M9012	07-JUL-10	
Total Organic Carbon	1.1 mg/L	1	.5	EPA 415.1	WG79528	08-JUL-10 11:19:25	N/A	N/A	

Report of Analytical Results

Client: Lucy Guzman
Tetra Tech NUS
55 Jonspin Road
Wilmington,MA 01887-1020

Lab Sample ID: SD3782-1
Report Date: 23-JUL-10
Client PO: 1045366, 112G02124,
Project: CTO WE19 NS Newport,
SDG: WE19-3

Sample Description	Matrix	Date Sampled	Date Received
DA-MW-105B-062810	AQ	28-JUN-10	29-JUN-10

Parameter	Result	Adj LOQ	Adj LOD	Anal. Method	QC.Batch	Anal. Date	Prep. Method	Prep. Date	Footnotes
Nitrate as N	0.099 mg/L	.05	.025	EPA 300.0	WG79229	29-JUN-10 12:43:00	N/A	N/A	
Nitrite as N	U0.025 mg/L	.05	.025	EPA 300.0	WG79229	29-JUN-10 12:43:00	N/A	N/A	
Nitrogen-Ammonia As N	U0.050 mg/L	.1	.05	EPA 350.1	WG79381	06-JUL-10 09:42:03	N/A	N/A	
Ortho-Phosphate	U0.050 mg/L	.1	.05	EPA 300.0	WG79229	29-JUN-10 12:43:00	N/A	N/A	
Sulfate	28. mg/L	2	1	EPA 300.0	WG79229	29-JUN-10 14:43:00	N/A	N/A	
Sulfide-Iodometric	J0.70 mg/L	1	.8	SM4500S E	WG79272	29-JUN-10 08:30:00	N/A	N/A	
Total Organic Carbon	J0.76 mg/L	1	.5	EPA 415.1	WG79524	07-JUL-10 20:27:16	N/A	N/A	

Report of Analytical Results

Client: Lucy Guzman
Tetra Tech NUS
55 Jonspin Road
Wilmington,MA 01887-1020

Lab Sample ID: SD3822-3
Report Date: 23-JUL-10
Client PO: 1045366, 112G02124,
Project: CTO WE19 NS Newport,
SDG: WE19-3

Sample Description	Matrix	Date Sampled	Date Received
DA-MW-11-062910	AQ	29-JUN-10	30-JUN-10

Parameter	Result	Adj LOQ	Adj LOD	Anal. Method	QC.Batch	Anal. Date	Prep. Method	Prep. Date	Footnotes
Nitrate as N	J0.026 mg/L	.05	.025	EPA 300.0	WG79234	30-JUN-10 12:21:00	N/A	N/A	
Nitrite as N	U0.025 mg/L	.05	.025	EPA 300.0	WG79234	30-JUN-10 12:21:00	N/A	N/A	
Nitrogen-Ammonia As N	J0.040 mg/L	.1	.05	EPA 350.1	WG79381	06-JUL-10 09:52:33	N/A	N/A	
Ortho-Phosphate	U0.050 mg/L	.1	.05	EPA 300.0	WG79234	30-JUN-10 12:21:00	N/A	N/A	
Sulfate	21. mg/L	2	1	EPA 300.0	WG79234	30-JUN-10 12:57:00	N/A	N/A	
Sulfide-Iodometric	U0.80 mg/L	1	.8	SM4500S E	WG79328	01-JUL-10 16:10:00	N/A	N/A	
Total Cyanide	U5.0 ug/L	10	5	SW846 M9012A	WG79311	02-JUL-10 15:25:00	SW846 M9012	02-JUL-10	
Total Organic Carbon	1.2 mg/L	1	.5	EPA 415.1	WG79524	07-JUL-10 21:42:34	N/A	N/A	

Report of Analytical Results

Client: Lucy Guzman
Tetra Tech NUS
55 Jonspin Road
Wilmington,MA 01887-1020

Lab Sample ID: SD3855-4
Report Date: 23-JUL-10
Client PO: 1045366, 112G02124,
Project: CTO WE19 NS Newport,
SDG: WE19-3

Sample Description	Matrix	Date Sampled	Date Received
DA-MW-12-063010	AQ	30-JUN-10	01-JUL-10

Parameter	Result	Adj LOQ	Adj LOD	Anal. Method	QC.Batch	Anal. Date	Prep. Method	Prep. Date	Footnotes
Nitrate as N	3.4 mg/L	.05	.025	EPA 300.0	WG79379	01-JUL-10 11:34:00	N/A	N/A	
Nitrite as N	U0.025 mg/L	.05	.025	EPA 300.0	WG79379	01-JUL-10 11:34:00	N/A	N/A	
Nitrogen-Ammonia As N	U0.050 mg/L	.1	.05	EPA 350.1	WG79381	06-JUL-10 09:52:36	N/A	N/A	
Ortho-Phosphate	U0.050 mg/L	.1	.05	EPA 300.0	WG79379	01-JUL-10 11:34:00	N/A	N/A	
Sulfate	23. mg/L	2	1	EPA 300.0	WG79379	01-JUL-10 13:14:00	N/A	N/A	
Sulfide-Iodometric	J0.73 mg/L	1	.8	SM4500S E	WG79399	06-JUL-10 11:00:00	N/A	N/A	
Total Cyanide	U5.0 ug/L	10	5	SW846 M9012A	WG79311	02-JUL-10 15:27:00	SW846 M9012	02-JUL-10	
Total Organic Carbon	1.0 mg/L	1	.5	EPA 415.1	WG79524	07-JUL-10 21:30:37	N/A	N/A	

Katahdin
ANALYTICAL SERVICES

Cert No E87604

Report of Analytical Results

Client: Lucy Guzman
Tetra Tech NUS
55 Jonspin Road
Wilmington,MA 01887-1020

Lab Sample ID: SD3855-3
Report Date: 23-JUL-10
Client PO: 1045366, 112G02124,
Project: CTO WE19 NS Newport,
SDG: WE19-3

Sample Description	Matrix	Date Sampled	Date Received
DA-MW-13B-063010	AQ	30-JUN-10	01-JUL-10

Parameter	Result	Adj LOQ	Adj LOD	Anal. Method	QC.Batch	Anal. Date	Prep. Method	Prep. Date	Footnotes
Total Cyanide	U5.0 ug/L	10	5	SW846 M9012A	WG79311	02-JUL-10 15:27:00	SW846 M9012	02-JUL-10	

Report of Analytical Results

Client: Lucy Guzman
Tetra Tech NUS
55 Jonspin Road
Wilmington,MA 01887-1020

Lab Sample ID: SD3782-3
Report Date: 23-JUL-10
Client PO: 1045366, 112G02124,
Project: CTO WE19 NS Newport,
SDG: WE19-3

Sample Description	Matrix	Date Sampled	Date Received
DA-MW-DUP01-062810	AQ	28-JUN-10	29-JUN-10

Parameter	Result	Adj LOQ	Adj LOD	Anal. Method	QC.Batch	Anal. Date	Prep. Method	Prep. Date	Footnotes
Nitrate as N	0.70 mg/L	.05	.025	EPA 300.0	WG79229	29-JUN-10 12:32:00	N/A	N/A	
Nitrite as N	U0.025 mg/L	.05	.025	EPA 300.0	WG79229	29-JUN-10 12:32:00	N/A	N/A	
Nitrogen-Ammonia As N	U0.050 mg/L	.1	.05	EPA 350.1	WG79381	06-JUL-10 09:42:04	N/A	N/A	
Ortho-Phosphate	U0.050 mg/L	.1	.05	EPA 300.0	WG79229	29-JUN-10 12:32:00	N/A	N/A	
Sulfate	21. mg/L	2	1	EPA 300.0	WG79229	29-JUN-10 14:32:00	N/A	N/A	
Sulfide-Iodometric	U0.80 mg/L	1	.8	SM4500S E	WG79272	29-JUN-10 08:30:00	N/A	N/A	
Total Organic Carbon	1.3 mg/L	1	.5	EPA 415.1	WG79524	07-JUL-10 21:18:40	N/A	N/A	

Report of Analytical Results

Client: Lucy Guzman
Tetra Tech NUS
55 Jonspin Road
Wilmington,MA 01887-1020

Lab Sample ID: SD3822-4
Report Date: 23-JUL-10
Client PO: 1045366, 112G02124,
Project: CTO WE19 NS Newport,
SDG: WE19-3

Sample Description	Matrix	Date Sampled	Date Received
DA-MW-DUP02-062910	AQ	29-JUN-10	30-JUN-10

Parameter	Result	Adj LOQ	Adj LOD	Anal. Method	QC.Batch	Anal. Date	Prep. Method	Prep. Date	Footnotes
Nitrate as N	U0.025 mg/L	.05	.025	EPA 300.0	WG79234	30-JUN-10 12:32:00	N/A	N/A	
Nitrite as N	U0.025 mg/L	.05	.025	EPA 300.0	WG79234	30-JUN-10 12:32:00	N/A	N/A	
Nitrogen-Ammonia As N	J0.038 mg/L	.1	.05	EPA 350.1	WG79381	06-JUL-10 09:52:34	N/A	N/A	
Ortho-Phosphate	U0.050 mg/L	.1	.05	EPA 300.0	WG79234	30-JUN-10 12:32:00	N/A	N/A	
Sulfate	19. mg/L	1	.5	EPA 300.0	WG79234	30-JUN-10 12:32:00	N/A	N/A	
Sulfide-Iodometric	U0.80 mg/L	1	.8	SM4500S E	WG79328	01-JUL-10 16:10:00	N/A	N/A	
Total Cyanide	U5.0 ug/L	10	5	SW846 M9012A	WG79311	02-JUL-10 15:25:00	SW846 M9012	02-JUL-10	
Total Organic Carbon	1.0 mg/L	1	.5	EPA 415.1	WG79528	07-JUL-10 22:36:31	N/A	N/A	

Tetra Tech NUS **INTERNAL CORRESPONDENCE**

TO: **J. FORRELLI** **DATE: SEPTEMBER 3, 2010**

FROM: **A. COGNETTI** **COPIES: DV FILE**

SUBJECT: **ORGANIC DATA VALIDATION: VOC**
CTO WE19, NAVSTA NEWPORT
SAMPLE DELIVERY GROUP (SDG)- WE19-4

SAMPLES: 4/Soil/VOC

127B-S-1-070910 0-2' 127B-S-3-070910 4-6' 128B-071210 2-4'
128B-071210 4-6'

2/Trip Blanks

TB-070910 TB-071210

Overview

The sample set for NAVSTA Newport, CTO WE19, SDG WE19-4 consists of four (4) environmental soil samples and two (2) trip blanks analyzed for volatile organic compounds (VOCs). There were no field duplicate pairs included in this SDG.

The samples were collected on July 9 and 12, 2010 and analyzed by Katahdin Analytical Services. All analyses were conducted in accordance with Naval Facilities Engineering Service Center (NFESC) Quality Assurance/Quality Control (QA/QC) criteria using SW-846 Methods 8260B for VOCs analytical and reporting protocol. A Tier 2 data validation was performed on the VOC analyses.

The data contained in this SDG were validated with regard to the following parameters:

* • Data Completeness
* • Holding Times
* • GC/MS Tuning
• Initial and Continuing Calibration
• Laboratory Method and/or Field Quality Control Blanks
* • Surrogate Spike Recoveries
* • Laboratory Control Spike / Laboratory Control Spike Duplicate Recoveries
* • Internal Standards Performance
* • Matrix Spike/Matrix Spike Duplicate Results
* • Detection Limits

The asterisk (*) indicates that all quality control criteria were met for this parameter. Qualified (if applicable) analytical results are summarized in Appendix A. Results as reported by the laboratory are presented in Appendix B. Appendix C contains Region I worksheets, and Appendix D contains the documentation to support the findings as discussed in this data validation report. The attached Table summarizes the validation qualifications which are based on the following information:

BLANKS

The following contaminant was detected in the laboratory method blanks associated with batch WG79874 affecting all samples within this SDG.

Contaminant	Maximum Concentration (ug/kg)	Action Level (ug/kg)
acetone	7.4	74.0

An action level of 10X the maximum concentration of common laboratory contaminant acetone was established in order to evaluate samples for blank contamination. Dilution factors, percent solids and sample aliquots were taken into consideration during the application of all action levels. The positive acetone results in samples 127B-S-3-070910 4-6' and 128B-071210 4-6' were less than the action level and CRQL. The results were qualified as (U). The positive acetone result in sample 128B-071210 2-4' was greater than the CRQL but less than the action level. The result was qualified as (U). No qualification was made on the positive acetone result greater than the action level in sample 127B-S-1-070910 0-2'. Trip blanks are not qualified due to laboratory blank contamination.

CALIBRATIONS

The VOC initial calibration percent relative standard deviation (%RSD) for acetone exceeded the 15% quality control limit on July 16, 2010 on instrument GCMS-M. The positive acetone results in the affected samples not previously qualified for blank contamination were qualified as estimated (J) due to this noncompliance.

The VOC continuing calibration percent difference (%D) for dichlorodifluoromethane, n-propylbenzene and sec-butylbenzene were greater than the 20% quality control limit on July 19, 2010 @ 9:38 on instrument GCMS-M. The nondetected dichlorodifluoromethane, n-propylbenzene and sec-butylbenzene results were qualified as estimated (UJ).

ADDITIONAL COMMENTS

Positive results reported at concentrations greater than the method detection limit (MDL) but less than the Reporting Limit (RL) were qualified as estimated (J).

EXECUTIVE SUMMARY

Laboratory Performance: Acetone was detected in the laboratory method blank. Acetone had a %RSD in the initial calibration greater than the quality control limits. Dichlorodifluoromethane, n-propylbenzene and sec-butylbenzene had %Ds in the continuing calibration exceeding quality control limits resulting in the qualification of data.

Other Factors Affecting Data Quality: None.

The data for these analyses were reviewed with reference to the Region I EPA "Data Validation Functional Guidelines - Part II" (12/96), and the Department of Defense (DoD) document entitled, "Quality Systems Manual (QSM) for Environmental Laboratories" (January 2006). The text of this report has been formulated to address only those problem areas affecting data quality.

Ann Cognetti

TetraTech NUS
Ann Cognetti
Chemist/Data Validator

TetraTech NUS
Joseph A. Samchuck
Data Validation Quality Assurance Officer

Attachments:

1. Appendix A - Qualified Analytical Results
2. Appendix B - Results as Reported by the Laboratory
3. Appendix C - Regional Worksheets
4. Appendix D - Support Documentation

APPENDIX A

QUALIFIED LABORATORY RESULTS

Data Validation Qualifier Codes:

A = Lab Blank Contamination
B = Field Blank Contamination
C = Calibration Noncompliance (e.g. % RSDs, %Ds, ICVs, CCVs, RRFs, etc.)
C01 = GC/MS Tuning Noncompliance
D = MS/MSD Recovery Noncompliance
E = LCS/LCSD Recovery Noncompliance
F = Lab Duplicate Imprecision
G = Field Duplicate Imprecision
H = Holding Time Exceedance
I = ICP Serial Dilution Noncompliance
J = GFAA PDS - GFAA MSA's $r < 0.995$
K = ICP Interference - includes ICS % R Noncompliance
L = Instrument Calibration Range Exceedance
M = Sample Preservation Noncompliance
N = Internal Standard Noncompliance
N01 = Internal Standard Recovery Noncompliance Dioxins
N02 = Recovery Standard Noncompliance Dioxins
N03 = Clean-up Standard Noncompliance Dioxins
O = Poor Instrument Performance (e.g. base-line drifting)
P = Uncertainty near detection limit (< 2 x IDL for inorganics and <CRQL for organics)
Q = Other problems (can be any number of issues; e.g. poor chromatography,interferences, etc.)
R = Surrogates Recovery Noncompliance
S = Pesticide/PCB Resolution
T = % Breakdown Noncompliance for DDT and Endrin
U = % Difference between columns/detectors >25% for positive results determined via GC/HPLC
V = Non-linear calibrations; correlation coefficient $r < 0.995$
W = EMPC result
X = Signal to noise response drop
Y = Percent solids <30%
Z = Uncertainty at 2 sigma deviation is greater than sample activity

PROJ_NO: 02124	NSAMPLE	127B-S-1-070910 0-2			127B-S-3-070910 4-6			128B-071210 2-4'			128B-071210 4-6'		
SDG: WE19-4	LAB_ID	SD4063-2			SD4063-3			SD4172-2			SD4172-3		
FRACTION: OV	SAMP_DATE	7/9/2010			7/9/2010			7/12/2010			7/12/2010		
MEDIA: SOIL	QC_TYPE	NM			NM			NM			NM		
	UNITS	UG/KG			UG/KG			UG/KG			UG/KG		
	PCT_SOLIDS	90.9			94.7			88.1			93.1		
	DUP_OF												
PARAMETER		RESULT	VQL	QLCD	RESULT	VQL	QLCD	RESULT	VQL	QLCD	RESULT	VQL	QLCD
1,1,1,2-TETRACHLOROETHANE		2.8	U		2.5	U		2.5	U		2.3	U	
1,1,1-TRICHLOROETHANE		2.8	U		2.5	U		2.5	U		2.3	U	
1,1,2,2-TETRACHLOROETHANE		2.8	U		2.5	U		2.5	U		2.3	U	
1,1,2-TRICHLOROETHANE		2.8	U		2.5	U		2.5	U		2.3	U	
1,1-DICHLOROETHANE		2.8	U		2.5	U		2.5	U		2.3	U	
1,1-DICHLOROETHENE		2.8	U		2.5	U		2.5	U		2.3	U	
1,1-DICHLOROPROPENE		2.8	U		2.5	U		2.5	U		2.3	U	
1,2,3-TRICHLOROBENZENE		2.8	U		2.5	U		2.5	U		2.3	U	
1,2,3-TRICHLOROPROPANE		2.8	U		2.5	U		2.5	U		2.3	U	
1,2,4-TRICHLOROBENZENE		2.8	U		2.5	U		2.5	U		2.3	U	
1,2,4-TRIMETHYLBENZENE		2.8	U		2.5	U		2.5	U		2.3	U	
1,2-DIBROMO-3-CHLOROPROPANE		2.8	U		2.5	U		2.5	U		2.3	U	
1,2-DIBROMOETHANE		2.8	U		2.5	U		2.5	U		2.3	U	
1,2-DICHLOROBENZENE		2.8	U		2.5	U		2.5	U		2.3	U	
1,2-DICHLOROETHANE		2.8	U		2.5	U		2.5	U		2.3	U	
1,2-DICHLOROPROPANE		2.8	U		2.5	U		2.5	U		2.3	U	
1,3,5-TRIMETHYLBENZENE		2.8	U		2.5	U		2.5	U		2.3	U	
1,3-DICHLOROBENZENE		2.8	U		2.5	U		2.5	U		2.3	U	
1,3-DICHLOROPROPANE		2.8	U		2.5	U		2.5	U		2.3	U	
1,4-DICHLOROBENZENE		2.8	U		2.5	U		2.5	U		2.3	U	
2,2-DICHLOROPROPANE		2.8	U		2.5	U		2.5	U		2.3	U	
2-BUTANONE		8	J	P	12	U		12	U		12	U	
2-CHLOROTOLUENE		2.8	U		2.5	U		2.5	U		2.3	U	
2-HEXANONE		15	J	P	12	U		12	U		12	U	
4-CHLOROTOLUENE		2.8	U		2.5	U		2.5	U		2.3	U	
4-ISOPROPYLTOLUENE		2.8	U		2.5	U		2.5	U		2.3	U	
4-METHYL-2-PENTANONE		14	U		12	U		12	U		12	U	
ACETONE		98	J	C	14	U	A	46	U	A	13	U	A
BENZENE		2.8	U		2.5	U		2.5	U		2.3	U	
BROMOBENZENE		2.8	U		2.5	U		2.5	U		2.3	U	
BROMOCHLOROMETHANE		2.8	U		2.5	U		2.5	U		2.3	U	
BROMODICHLOROMETHANE		2.8	U		2.5	U		2.5	U		2.3	U	
BROMOFORM		2.8	U		2.5	U		2.5	U		2.3	U	
BROMOMETHANE		5.5	U		5	U		5	U		4.6	U	
CARBON DISULFIDE		2.8	U		2.5	U		2.5	U		2.3	U	
CARBON TETRACHLORIDE		2.8	U		2.5	U		2.5	U		2.3	U	

PROJ_NO: 02124	NSAMPLE	127B-S-1-070910 0-2			127B-S-3-070910 4-6			128B-071210 2-4'			128B-071210 4-6'		
SDG: WE19-4	LAB_ID	SD4063-2			SD4063-3			SD4172-2			SD4172-3		
FRACTION: OV	SAMP_DATE	7/9/2010			7/9/2010			7/12/2010			7/12/2010		
MEDIA: SOIL	QC_TYPE	NM			NM			NM			NM		
	UNITS	UG/KG			UG/KG			UG/KG			UG/KG		
	PCT_SOLIDS	90.9			94.7			88.1			93.1		
	DUP_OF												
PARAMETER		RESULT	VQL	QLCD	RESULT	VQL	QLCD	RESULT	VQL	QLCD	RESULT	VQL	QLCD
CHLOROBENZENE		2.8	U		2.5	U		2.5	U		2.3	U	
CHLORODIBROMOMETHANE		2.8	U		2.5	U		2.5	U		2.3	U	
CHLOROETHANE		5.5	U		5	U		5	U		4.6	U	
CHLOROFORM		2.8	U		2.5	U		2.5	U		2.3	U	
CHLOROMETHANE		5.5	U		5	U		5	U		4.6	U	
CIS-1,2-DICHLOROETHENE		2.8	U		2.5	U		2.5	U		2.3	U	
CIS-1,3-DICHLOROPROPENE		2.8	U		2.5	U		2.5	U		2.3	U	
DIBROMOMETHANE		2.8	U		2.5	U		2.5	U		2.3	U	
DICHLORODIFLUOROMETHANE		5.5	UJ	C	5	UJ	C	5	UJ	C	4.6	UJ	C
ETHYLBENZENE		2.8	U		2.5	U		2.5	U		2.3	U	
HEXACHLOROBUTADIENE		2.8	U		2.5	U		2.5	U		2.3	U	
ISOPROPYLBENZENE		2.8	U		2.5	U		2.5	U		2.3	U	
M+P-XYLENES		5.5	U		5	U		5	U		4.6	U	
METHYL TERT-BUTYL ETHER		2.8	U		2.5	U		2.5	U		2.3	U	
METHYLENE CHLORIDE		14	U		12	U		12	U		12	U	
N-BUTYLBENZENE		2.8	U		2.5	U		2.5	U		2.3	U	
N-PROPYLBENZENE		2.8	UJ	C	2.5	UJ	C	2.5	UJ	C	2.3	UJ	C
O-XYLENE		2.8	U		2.5	U		2.5	U		2.3	U	
SEC-BUTYLBENZENE		2.8	UJ	C	2.5	UJ	C	2.5	UJ	C	2.3	UJ	C
STYRENE		2.8	U		2.5	U		2.5	U		2.3	U	
TERT-BUTYLBENZENE		2.8	U		2.5	U		2.5	U		2.3	U	
TETRACHLOROETHENE		2.8	U		2.5	U		2.5	U		2.3	U	
TOLUENE		2.8	U		2.5	U		2.5	U		2.3	U	
TRANS-1,2-DICHLOROETHENE		2.8	U		2.5	U		2.5	U		2.3	U	
TRANS-1,3-DICHLOROPROPENE		2.8	U		2.5	U		2.5	U		2.3	U	
TRICHLOROETHENE		2.8	U		1.1	J	P	2.5	U		2.3	U	
TRICHLOROFLUOROMETHANE		5.5	U		5	U		5	U		4.6	U	
VINYL CHLORIDE		5.5	U		5	U		5	U		4.6	U	

PROJ_NO: 02124	NSAMPLE	TB-070910			TB-071210		
SDG: WE19-4	LAB_ID	SD4063-1			SD4172-1		
FRACTION: OV	SAMP_DATE	7/9/2010			7/12/2010		
MEDIA: WATER	QC_TYPE	NM			NM		
	UNITS	UG/L			UG/L		
	PCT_SOLIDS	0.0			0.0		
	DUP_OF						
PARAMETER		RESULT	VQL	QLCD	RESULT	VQL	QLCD
1,1,1,2-TETRACHLOROETHANE		2.5	U		2.5	U	
1,1,1-TRICHLOROETHANE		2.5	U		2.5	U	
1,1,2,2-TETRACHLOROETHANE		2.5	U		2.5	U	
1,1,2-TRICHLOROETHANE		2.5	U		2.5	U	
1,1-DICHLOROETHANE		2.5	U		2.5	U	
1,1-DICHLOROETHENE		2.5	U		2.5	U	
1,1-DICHLOROPROPENE		2.5	U		2.5	U	
1,2,3-TRICHLOROBENZENE		2.5	U		2.5	U	
1,2,3-TRICHLOROPROPANE		2.5	U		2.5	U	
1,2,4-TRICHLOROBENZENE		2.5	U		2.5	U	
1,2,4-TRIMETHYLBENZENE		2.5	U		2.5	U	
1,2-DIBROMO-3-CHLOROPROPANE		2.5	U		2.5	U	
1,2-DIBROMOETHANE		2.5	U		2.5	U	
1,2-DICHLOROBENZENE		2.5	U		2.5	U	
1,2-DICHLOROETHANE		2.5	U		2.5	U	
1,2-DICHLOROPROPANE		2.5	U		2.5	U	
1,3,5-TRIMETHYLBENZENE		2.5	U		2.5	U	
1,3-DICHLOROBENZENE		2.5	U		2.5	U	
1,3-DICHLOROPROPANE		2.5	U		2.5	U	
1,4-DICHLOROBENZENE		2.5	U		2.5	U	
2,2-DICHLOROPROPANE		2.5	U		2.5	U	
2-BUTANONE		12	U		12	U	
2-CHLOROTOLUENE		2.5	U		2.5	U	
2-HEXANONE		12	U		12	U	
4-CHLOROTOLUENE		2.5	U		2.5	U	
4-ISOPROPYLTOLUENE		2.5	U		2.5	U	
4-METHYL-2-PENTANONE		12	U		12	U	
ACETONE		5.9	J	CP	7.2	J	CP
BENZENE		2.5	U		2.5	U	
BROMOBENZENE		2.5	U		2.5	U	
BROMOCHLOROMETHANE		2.5	U		2.5	U	
BROMODICHLOROMETHANE		2.5	U		2.5	U	
BROMOFORM		2.5	U		2.5	U	
BROMOMETHANE		5	U		5	U	
CARBON DISULFIDE		2.5	U		2.5	U	
CARBON TETRACHLORIDE		2.5	U		2.5	U	

PROJ_NO: 02124	NSAMPLE	TB-070910			TB-071210		
SDG: WE19-4	LAB_ID	SD4063-1			SD4172-1		
FRACTION: OV	SAMP_DATE	7/9/2010			7/12/2010		
MEDIA: WATER	QC_TYPE	NM			NM		
	UNITS	UG/L			UG/L		
	PCT_SOLIDS	0.0			0.0		
	DUP_OF						
PARAMETER		RESULT	VQL	QLCD	RESULT	VQL	QLCD
CHLOROBENZENE		2.5	U		2.5	U	
CHLORODIBROMOMETHANE		2.5	U		2.5	U	
CHLOROETHANE		5	U		5	U	
CHLOROFORM		2.5	U		2.5	U	
CHLOROMETHANE		5	U		5	U	
CIS-1,2-DICHLOROETHENE		2.5	U		2.5	U	
CIS-1,3-DICHLOROPROPENE		2.5	U		2.5	U	
DIBROMOMETHANE		2.5	U		2.5	U	
DICHLORODIFLUOROMETHANE		5	UJ	C	5	UJ	C
ETHYLBENZENE		2.5	U		2.5	U	
HEXACHLOROBUTADIENE		2.5	U		2.5	U	
ISOPROPYLBENZENE		2.5	U		2.5	U	
M+P-XYLENES		5	U		5	U	
METHYL TERT-BUTYL ETHER		2.5	U		2.5	U	
METHYLENE CHLORIDE		12	U		12	U	
N-BUTYLBENZENE		2.5	U		2.5	U	
N-PROPYLBENZENE		2.5	UJ	C	2.5	UJ	C
O-XYLENE		2.5	U		2.5	U	
SEC-BUTYLBENZENE		2.5	UJ	C	2.5	UJ	C
STYRENE		2.5	U		2.5	U	
TERT-BUTYLBENZENE		2.5	U		2.5	U	
TETRACHLOROETHENE		2.5	U		2.5	U	
TOLUENE		2.5	U		2.5	U	
TRANS-1,2-DICHLOROETHENE		2.5	U		2.5	U	
TRANS-1,3-DICHLOROPROPENE		2.5	U		2.5	U	
TRICHLOROETHENE		2.5	U		2.5	U	
TRICHLOROFLUOROMETHANE		5	U		5	U	
VINYL CHLORIDE		5	U		5	U	

APPENDIX B

RESULTS AS REPORTED BY THE LABORATORY

Katahdin
ANALYTICAL SERVICES

Cert No E87604

Report of Analytical Results

Client: Tetra Tech NUS, Inc.
Lab ID: SD4063-2
Client ID: 127B-S-1-070910 0-2
Project: CTO WE19 NS Newport, Soi
SDG: WE19-4

Sample Date: 09-JUL-10
Received Date: 10-JUL-10
Extract Date: 19-JUL-10
Extracted By: HCG
Extraction Method:
Lab Prep Batch: WG79874

Analysis Date: 19-JUL-10
Analyst: HCG
Analysis Method: SW846 8260B
Matrix: SL
% Solids: 91.
Report Date: 02-AUG-10

Compound	Qualifier	Result	Units	Dilution	LOQ	ADJ LOQ	ADJ MDL	ADJ LOD
Dichlorodifluoromethane	U	5.5	ug/Kg	1	10	11.	1.0	5.5
Chloromethane	U	5.5	ug/Kg	1	10	11.	1.5	5.5
Vinyl Chloride	U	5.5	ug/Kg	1	10	11.	0.96	5.5
Bromomethane	U	5.5	ug/Kg	1	10	11.	1.2	5.5
Chloroethane	U	5.5	ug/Kg	1	10	11.	1.4	5.5
Trichlorofluoromethane	U	5.5	ug/Kg	1	10	11.	1.0	5.5
1,1-Dichloroethene	U	2.8	ug/Kg	1	5	5.5	1.0	2.8
Carbon Disulfide	U	2.8	ug/Kg	1	5	5.5	0.86	2.8
Methylene Chloride	U	14.	ug/Kg	1	25	28.	8.7	14.
Acetone		98.	ug/Kg	1	25	28.	5.6	14.
trans-1,2-Dichloroethene	U	2.8	ug/Kg	1	5	5.5	0.78	2.8
Methyl tert-butyl Ether	U	2.8	ug/Kg	1	5	5.5	1.2	2.8
1,1-Dichloroethane	U	2.8	ug/Kg	1	5	5.5	1.9	2.8
cis-1,2-Dichloroethene	U	2.8	ug/Kg	1	5	5.5	1.0	2.8
2,2-Dichloropropane	U	2.8	ug/Kg	1	5	5.5	0.55	2.8
Bromochloromethane	U	2.8	ug/Kg	1	5	5.5	1.0	2.8
Chloroform	U	2.8	ug/Kg	1	5	5.5	0.38	2.8
Carbon Tetrachloride	U	2.8	ug/Kg	1	5	5.5	1.4	2.8
1,1,1-Trichloroethane	U	2.8	ug/Kg	1	5	5.5	0.46	2.8
1,1-Dichloropropene	U	2.8	ug/Kg	1	5	5.5	1.0	2.8
2-Butanone	J	8.0	ug/Kg	1	25	28.	6.5	14.
Benzene	U	2.8	ug/Kg	1	5	5.5	1.0	2.8
1,2-Dichloroethane	U	2.8	ug/Kg	1	5	5.5	1.1	2.8
Trichloroethene	U	2.8	ug/Kg	1	5	5.5	0.65	2.8
Dibromomethane	U	2.8	ug/Kg	1	5	5.5	0.56	2.8
1,2-Dichloropropane	U	2.8	ug/Kg	1	5	5.5	1.5	2.8
Bromodichloromethane	U	2.8	ug/Kg	1	5	5.5	0.66	2.8
cis-1,3-Dichloropropene	U	2.8	ug/Kg	1	5	5.5	0.79	2.8
Toluene	U	2.8	ug/Kg	1	5	5.5	1.5	2.8
4-Methyl-2-Pentanone	U	14.	ug/Kg	1	25	28.	6.5	14.
Tetrachloroethene	U	2.8	ug/Kg	1	5	5.5	1.3	2.8
trans-1,3-Dichloropropene	U	2.8	ug/Kg	1	5	5.5	0.95	2.8
1,1,2-Trichloroethane	U	2.8	ug/Kg	1	5	5.5	1.1	2.8
Dibromochloromethane	U	2.8	ug/Kg	1	5	5.5	1.1	2.8
1,3-Dichloropropane	U	2.8	ug/Kg	1	5	5.5	1.0	2.8

600 Technology Way
P.O. Box 540, Scarborough, ME 04070
Tel:(207) 874-2400 Fax:(207) 775-4029

Report of Analytical Results

Client: Tetra Tech NUS, Inc.
Lab ID: SD4063-2
Client ID: 127B-S-1-070910 0-2
Project: CTO WE19 NS Newport, Soi
SDG: WE19-4

Sample Date: 09-JUL-10
Received Date: 10-JUL-10
Extract Date: 19-JUL-10
Extracted By: HCG
Extraction Method:
Lab Prep Batch: WG79874

Analysis Date: 19-JUL-10
Analyst: HCG
Analysis Method: SW846 8260B
Matrix: SL
% Solids: 91.
Report Date: 02-AUG-10

Compound	Qualifier	Result	Units	Dilution	LOQ	ADJ LOQ	ADJ MDL	ADJ LOD
1,2-Dibromoethane	U	2.8	ug/Kg	1	5	5.5	1.3	2.8
2-Hexanone	J	15.	ug/Kg	1	25	28.	5.3	14.
Chlorobenzene	U	2.8	ug/Kg	1	5	5.5	0.56	2.8
Ethylbenzene	U	2.8	ug/Kg	1	5	5.5	0.72	2.8
1,1,1,2-Tetrachloroethane	U	2.8	ug/Kg	1	5	5.5	0.77	2.8
m+p-Xylenes	U	5.5	ug/Kg	1	10	11.	1.9	5.5
o-Xylene	U	2.8	ug/Kg	1	5	5.5	1.4	2.8
Styrene	U	2.8	ug/Kg	1	5	5.5	0.56	2.8
Bromoform	U	2.8	ug/Kg	1	5	5.5	0.77	2.8
Isopropylbenzene	U	2.8	ug/Kg	1	5	5.5	1.0	2.8
Bromobenzene	U	2.8	ug/Kg	1	5	5.5	0.81	2.8
N-Propylbenzene	U	2.8	ug/Kg	1	5	5.5	0.91	2.8
1,1,2,2-Tetrachloroethane	U	2.8	ug/Kg	1	5	5.5	0.92	2.8
1,3,5-Trimethylbenzene	U	2.8	ug/Kg	1	5	5.5	0.74	2.8
2-Chlorotoluene	U	2.8	ug/Kg	1	5	5.5	1.2	2.8
1,2,3-Trichloropropane	U	2.8	ug/Kg	1	5	5.5	1.3	2.8
4-Chlorotoluene	U	2.8	ug/Kg	1	5	5.5	0.54	2.8
tert-Butylbenzene	U	2.8	ug/Kg	1	5	5.5	0.99	2.8
1,2,4-Trimethylbenzene	U	2.8	ug/Kg	1	5	5.5	0.96	2.8
P-Isopropyltoluene	U	2.8	ug/Kg	1	5	5.5	0.84	2.8
1,3-Dichlorobenzene	U	2.8	ug/Kg	1	5	5.5	0.68	2.8
1,4-Dichlorobenzene	U	2.8	ug/Kg	1	5	5.5	0.48	2.8
N-Butylbenzene	U	2.8	ug/Kg	1	5	5.5	1.0	2.8
sec-Butylbenzene	U	2.8	ug/Kg	1	5	5.5	1.0	2.8
1,2-Dichlorobenzene	U	2.8	ug/Kg	1	5	5.5	0.86	2.8
1,2-Dibromo-3-Chloropropane	U	2.8	ug/Kg	1	5	5.5	1.6	2.8
Hexachlorobutadiene	U	2.8	ug/Kg	1	5	5.5	0.81	2.8
1,2,4-Trichlorobenzene	U	2.8	ug/Kg	1	5	5.5	0.87	2.8
1,2,3-Trichlorobenzene	U	2.8	ug/Kg	1	5	5.5	0.84	2.8
p-Bromofluorobenzene		99.5	%					
Toluene-D8		102.	%					
1,2-Dichloroethane-D4		112.	%					
Dibromofluoromethane		101.	%					

600 Technology Way
P.O. Box 540, Scarborough, ME 04070
Tel:(207) 874-2400 Fax:(207) 775-4029

http://www.katahdinlab.com

Katahdin
ANALYTICAL SERVICES

Cert No E87604

Report of Analytical Results

Client: Tetra Tech NUS, Inc.
Lab ID: SD4063-3
Client ID: 127B-S-3-070910 4-6
Project: CTO WE19 NS Newport, Soi
SDG: WE19-4

Sample Date: 09-JUL-10
Received Date: 10-JUL-10
Extract Date: 19-JUL-10
Extracted By: HCG
Extraction Method:
Lab Prep Batch: WG79874

Analysis Date: 19-JUL-10
Analyst: HCG
Analysis Method: SW846 8260B
Matrix: SL
% Solids: 95.
Report Date: 02-AUG-10

Compound	Qualifier	Result	Units	Dilution	LOQ	ADJ LOQ	ADJ MDL	ADJ LOD
Dichlorodifluoromethane	U	5.0	ug/Kg	1	10	10.	0.92	5.0
Chloromethane	U	5.0	ug/Kg	1	10	10.	1.4	5.0
Vinyl Chloride	U	5.0	ug/Kg	1	10	10.	0.87	5.0
Bromomethane	U	5.0	ug/Kg	1	10	10.	1.1	5.0
Chloroethane	U	5.0	ug/Kg	1	10	10.	1.3	5.0
Trichlorofluoromethane	U	5.0	ug/Kg	1	10	10.	0.91	5.0
1,1-Dichloroethene	U	2.5	ug/Kg	1	5	5.0	0.93	2.5
Carbon Disulfide	U	2.5	ug/Kg	1	5	5.0	0.78	2.5
Methylene Chloride	U	12.	ug/Kg	1	25	25.	7.9	12.
Acetone	J	14.	ug/Kg	1	25	25.	5.1	12.
trans-1,2-Dichloroethene	U	2.5	ug/Kg	1	5	5.0	0.71	2.5
Methyl tert-butyl Ether	U	2.5	ug/Kg	1	5	5.0	1.1	2.5
1,1-Dichloroethane	U	2.5	ug/Kg	1	5	5.0	1.7	2.5
cis-1,2-Dichloroethene	U	2.5	ug/Kg	1	5	5.0	0.91	2.5
2,2-Dichloropropane	U	2.5	ug/Kg	1	5	5.0	0.50	2.5
Bromochloromethane	U	2.5	ug/Kg	1	5	5.0	0.91	2.5
Chloroform	U	2.5	ug/Kg	1	5	5.0	0.35	2.5
Carbon Tetrachloride	U	2.5	ug/Kg	1	5	5.0	1.3	2.5
1,1,1-Trichloroethane	U	2.5	ug/Kg	1	5	5.0	0.42	2.5
1,1-Dichloropropene	U	2.5	ug/Kg	1	5	5.0	0.91	2.5
2-Butanone	U	12.	ug/Kg	1	25	25.	5.9	12.
Benzene	U	2.5	ug/Kg	1	5	5.0	0.92	2.5
1,2-Dichloroethane	U	2.5	ug/Kg	1	5	5.0	1.0	2.5
Trichloroethene	J	1.1	ug/Kg	1	5	5.0	0.59	2.5
Dibromomethane	U	2.5	ug/Kg	1	5	5.0	0.51	2.5
1,2-Dichloropropane	U	2.5	ug/Kg	1	5	5.0	1.4	2.5
Bromodichloromethane	U	2.5	ug/Kg	1	5	5.0	0.60	2.5
cis-1,3-Dichloropropene	U	2.5	ug/Kg	1	5	5.0	0.72	2.5
Toluene	U	2.5	ug/Kg	1	5	5.0	1.4	2.5
4-Methyl-2-Pentanone	U	12.	ug/Kg	1	25	25.	5.9	12.
Tetrachloroethene	U	2.5	ug/Kg	1	5	5.0	1.2	2.5
trans-1,3-Dichloropropene	U	2.5	ug/Kg	1	5	5.0	0.86	2.5
1,1,2-Trichloroethane	U	2.5	ug/Kg	1	5	5.0	0.97	2.5
Dibromochloromethane	U	2.5	ug/Kg	1	5	5.0	1.0	2.5
1,3-Dichloropropane	U	2.5	ug/Kg	1	5	5.0	0.94	2.5

600 Technology Way
P.O. Box 540, Scarborough, ME 04070
Tel:(207) 874-2400 Fax:(207) 775-4029

Report of Analytical Results

Client: Tetra Tech NUS, Inc.
Lab ID: SD4063-3
Client ID: 127B-S-3-070910 4-6
Project: CTO WE19 NS Newport, Soi
SDG: WE19-4

Sample Date: 09-JUL-10
Received Date: 10-JUL-10
Extract Date: 19-JUL-10
Extracted By: HCG
Extraction Method:
Lab Prep Batch: WG79874

Analysis Date: 19-JUL-10
Analyst: HCG
Analysis Method: SW846 8260B
Matrix: SL
% Solids: 95.
Report Date: 02-AUG-10

Compound	Qualifier	Result	Units	Dilution	LOQ	ADJ LOQ	ADJ MDL	ADJ LOD
1,2-Dibromoethane	U	2.5	ug/Kg	1	5	5.0	1.2	2.5
2-Hexanone	U	12.	ug/Kg	1	25	25.	4.8	12.
Chlorobenzene	U	2.5	ug/Kg	1	5	5.0	0.51	2.5
Ethylbenzene	U	2.5	ug/Kg	1	5	5.0	0.65	2.5
1,1,1,2-Tetrachloroethane	U	2.5	ug/Kg	1	5	5.0	0.70	2.5
m+p-Xylenes	U	5.0	ug/Kg	1	10	10.	1.7	5.0
o-Xylene	U	2.5	ug/Kg	1	5	5.0	1.3	2.5
Styrene	U	2.5	ug/Kg	1	5	5.0	0.51	2.5
Bromoform	U	2.5	ug/Kg	1	5	5.0	0.70	2.5
Isopropylbenzene	U	2.5	ug/Kg	1	5	5.0	0.92	2.5
Bromobenzene	U	2.5	ug/Kg	1	5	5.0	0.74	2.5
N-Propylbenzene	U	2.5	ug/Kg	1	5	5.0	0.83	2.5
1,1,2,2-Tetrachloroethane	U	2.5	ug/Kg	1	5	5.0	0.84	2.5
1,3,5-Trimethylbenzene	U	2.5	ug/Kg	1	5	5.0	0.67	2.5
2-Chlorotoluene	U	2.5	ug/Kg	1	5	5.0	1.1	2.5
1,2,3-Trichloropropane	U	2.5	ug/Kg	1	5	5.0	1.2	2.5
4-Chlorotoluene	U	2.5	ug/Kg	1	5	5.0	0.49	2.5
tert-Butylbenzene	U	2.5	ug/Kg	1	5	5.0	0.90	2.5
1,2,4-Trimethylbenzene	U	2.5	ug/Kg	1	5	5.0	0.87	2.5
P-Isopropyltoluene	U	2.5	ug/Kg	1	5	5.0	0.76	2.5
1,3-Dichlorobenzene	U	2.5	ug/Kg	1	5	5.0	0.62	2.5
1,4-Dichlorobenzene	U	2.5	ug/Kg	1	5	5.0	0.44	2.5
N-Butylbenzene	U	2.5	ug/Kg	1	5	5.0	0.92	2.5
sec-Butylbenzene	U	2.5	ug/Kg	1	5	5.0	0.91	2.5
1,2-Dichlorobenzene	U	2.5	ug/Kg	1	5	5.0	0.78	2.5
1,2-Dibromo-3-Chloropropane	U	2.5	ug/Kg	1	5	5.0	1.5	2.5
Hexachlorobutadiene	U	2.5	ug/Kg	1	5	5.0	0.74	2.5
1,2,4-Trichlorobenzene	U	2.5	ug/Kg	1	5	5.0	0.79	2.5
1,2,3-Trichlorobenzene	U	2.5	ug/Kg	1	5	5.0	0.76	2.5
p-Bromofluorobenzene		104.	%					
Toluene-D8		107.	%					
1,2-Dichloroethane-D4		124.	%					
Dibromofluoromethane		112.	%					

600 Technology Way
P.O. Box 540, Scarborough, ME 04070
Tel:(207) 874-2400 Fax:(207) 775-4029

Report of Analytical Results

Client: Tetra Tech NUS, Inc.
Lab ID: SD4172-2
Client ID: 128B-071210 2-4'
Project: CTO WE19 NS Newport, Soi
SDG: WE19-4

Sample Date: 12-JUL-10
Received Date: 14-JUL-10
Extract Date: 19-JUL-10
Extracted By: HCG
Extraction Method:
Lab Prep Batch: WG79874

Analysis Date: 19-JUL-10
Analyst: HCG
Analysis Method: SW846 8260B
Matrix: SL
% Solids: 88.
Report Date: 02-AUG-10

Compound	Qualifier	Result	Units	Dilution	LOQ	ADJ LOQ	ADJ MDL	ADJ LOD
Dichlorodifluoromethane	U	5.0	ug/Kg	1	10	10.	0.92	5.0
Chloromethane	U	5.0	ug/Kg	1	10	10.	1.4	5.0
Vinyl Chloride	U	5.0	ug/Kg	1	10	10.	0.87	5.0
Bromomethane	U	5.0	ug/Kg	1	10	10.	1.1	5.0
Chloroethane	U	5.0	ug/Kg	1	10	10.	1.3	5.0
Trichlorofluoromethane	U	5.0	ug/Kg	1	10	10.	0.91	5.0
1,1-Dichloroethene	U	2.5	ug/Kg	1	5	5.0	0.93	2.5
Carbon Disulfide	U	2.5	ug/Kg	1	5	5.0	0.78	2.5
Methylene Chloride	U	12.	ug/Kg	1	25	25.	7.9	12.
Acetone		46.	ug/Kg	1	25	25.	5.1	12.
trans-1,2-Dichloroethene	U	2.5	ug/Kg	1	5	5.0	0.71	2.5
Methyl tert-butyl Ether	U	2.5	ug/Kg	1	5	5.0	1.1	2.5
1,1-Dichloroethane	U	2.5	ug/Kg	1	5	5.0	1.7	2.5
cis-1,2-Dichloroethene	U	2.5	ug/Kg	1	5	5.0	0.91	2.5
2,2-Dichloropropane	U	2.5	ug/Kg	1	5	5.0	0.50	2.5
Bromochloromethane	U	2.5	ug/Kg	1	5	5.0	0.91	2.5
Chloroform	U	2.5	ug/Kg	1	5	5.0	0.35	2.5
Carbon Tetrachloride	U	2.5	ug/Kg	1	5	5.0	1.3	2.5
1,1,1-Trichloroethane	U	2.5	ug/Kg	1	5	5.0	0.42	2.5
1,1-Dichloropropene	U	2.5	ug/Kg	1	5	5.0	0.91	2.5
2-Butanone	U	12.	ug/Kg	1	25	25.	5.9	12.
Benzene	U	2.5	ug/Kg	1	5	5.0	0.92	2.5
1,2-Dichloroethane	U	2.5	ug/Kg	1	5	5.0	1.0	2.5
Trichloroethene	U	2.5	ug/Kg	1	5	5.0	0.59	2.5
Dibromomethane	U	2.5	ug/Kg	1	5	5.0	0.51	2.5
1,2-Dichloropropane	U	2.5	ug/Kg	1	5	5.0	1.4	2.5
Bromodichloromethane	U	2.5	ug/Kg	1	5	5.0	0.60	2.5
cis-1,3-Dichloropropene	U	2.5	ug/Kg	1	5	5.0	0.72	2.5
Toluene	U	2.5	ug/Kg	1	5	5.0	1.4	2.5
4-Methyl-2-Pentanone	U	12.	ug/Kg	1	25	25.	5.9	12.
Tetrachloroethene	U	2.5	ug/Kg	1	5	5.0	1.2	2.5
trans-1,3-Dichloropropene	U	2.5	ug/Kg	1	5	5.0	0.86	2.5
1,1,2-Trichloroethane	U	2.5	ug/Kg	1	5	5.0	0.97	2.5
Dibromochloromethane	U	2.5	ug/Kg	1	5	5.0	1.0	2.5
1,3-Dichloropropane	U	2.5	ug/Kg	1	5	5.0	0.94	2.5

600 Technology Way
P.O. Box 540, Scarborough, ME 04070
Tel:(207) 874-2400 Fax:(207) 775-4029

Report of Analytical Results

Client: Tetra Tech NUS, Inc.
Lab ID: SD4172-2
Client ID: 128B-071210 2-4'
Project: CTO WE19 NS Newport, Soil
SDG: WE19-4

Sample Date: 12-JUL-10
Received Date: 14-JUL-10
Extract Date: 19-JUL-10
Extracted By: HCG
Extraction Method:
Lab Prep Batch: WG79874

Analysis Date: 19-JUL-10
Analyst: HCG
Analysis Method: SW846 8260B
Matrix: SL
% Solids: 88.
Report Date: 02-AUG-10

Compound	Qualifier	Result	Units	Dilution	LOQ	ADJ LOQ	ADJ MDL	ADJ LOD
1,2-Dibromoethane	U	2.5	ug/Kg	1	5	5.0	1.2	2.5
2-Hexanone	U	12.	ug/Kg	1	25	25.	4.8	12.
Chlorobenzene	U	2.5	ug/Kg	1	5	5.0	0.51	2.5
Ethylbenzene	U	2.5	ug/Kg	1	5	5.0	0.65	2.5
1,1,1,2-Tetrachloroethane	U	2.5	ug/Kg	1	5	5.0	0.70	2.5
m+p-Xylenes	U	5.0	ug/Kg	1	10	10.	1.7	5.0
o-Xylene	U	2.5	ug/Kg	1	5	5.0	1.3	2.5
Styrene	U	2.5	ug/Kg	1	5	5.0	0.51	2.5
Bromoform	U	2.5	ug/Kg	1	5	5.0	0.70	2.5
Isopropylbenzene	U	2.5	ug/Kg	1	5	5.0	0.92	2.5
Bromobenzene	U	2.5	ug/Kg	1	5	5.0	0.74	2.5
N-Propylbenzene	U	2.5	ug/Kg	1	5	5.0	0.83	2.5
1,1,2,2-Tetrachloroethane	U	2.5	ug/Kg	1	5	5.0	0.84	2.5
1,3,5-Trimethylbenzene	U	2.5	ug/Kg	1	5	5.0	0.67	2.5
2-Chlorotoluene	U	2.5	ug/Kg	1	5	5.0	1.1	2.5
1,2,3-Trichloropropane	U	2.5	ug/Kg	1	5	5.0	1.2	2.5
4-Chlorotoluene	U	2.5	ug/Kg	1	5	5.0	0.49	2.5
tert-Butylbenzene	U	2.5	ug/Kg	1	5	5.0	0.90	2.5
1,2,4-Trimethylbenzene	U	2.5	ug/Kg	1	5	5.0	0.87	2.5
P-Isopropyltoluene	U	2.5	ug/Kg	1	5	5.0	0.76	2.5
1,3-Dichlorobenzene	U	2.5	ug/Kg	1	5	5.0	0.62	2.5
1,4-Dichlorobenzene	U	2.5	ug/Kg	1	5	5.0	0.44	2.5
N-Butylbenzene	U	2.5	ug/Kg	1	5	5.0	0.92	2.5
sec-Butylbenzene	U	2.5	ug/Kg	1	5	5.0	0.91	2.5
1,2-Dichlorobenzene	U	2.5	ug/Kg	1	5	5.0	0.78	2.5
1,2-Dibromo-3-Chloropropane	U	2.5	ug/Kg	1	5	5.0	1.5	2.5
Hexachlorobutadiene	U	2.5	ug/Kg	1	5	5.0	0.74	2.5
1,2,4-Trichlorobenzene	U	2.5	ug/Kg	1	5	5.0	0.79	2.5
1,2,3-Trichlorobenzene	U	2.5	ug/Kg	1	5	5.0	0.76	2.5
p-Bromofluorobenzene		93.7	%					
Toluene-D8		98.8	%					
1,2-Dichloroethane-D4		110.	%					
Dibromofluoromethane		105.	%					

600 Technology Way
P.O. Box 540, Scarborough, ME 04070
Tel:(207) 874-2400 Fax:(207) 775-4029

http://www.katahdinlab.com

Report of Analytical Results

Client: Tetra Tech NUS, Inc.
Lab ID: SD4172-3
Client ID: 128B-071210 4-6'
Project: CTO WE19 NS Newport, Soi
SDG: WE19-4

Sample Date: 12-JUL-10
Received Date: 14-JUL-10
Extract Date: 19-JUL-10
Extracted By: HCG
Extraction Method:
Lab Prep Batch: WG79874

Analysis Date: 19-JUL-10
Analyst: HCG
Analysis Method: SW846 8260B
Matrix: SL
% Solids: 93.
Report Date: 02-AUG-10

Compound	Qualifier	Result	Units	Dilution	LOQ	ADJ LOQ	ADJ MDL	ADJ LOD
Dichlorodifluoromethane	U	4.6	ug/Kg	1	10	9.2	0.85	4.6
Chloromethane	U	4.6	ug/Kg	1	10	9.2	1.3	4.6
Vinyl Chloride	U	4.6	ug/Kg	1	10	9.2	0.80	4.6
Bromomethane	U	4.6	ug/Kg	1	10	9.2	1.0	4.6
Chloroethane	U	4.6	ug/Kg	1	10	9.2	1.2	4.6
Trichlorofluoromethane	U	4.6	ug/Kg	1	10	9.2	0.84	4.6
1,1-Dichloroethene	U	2.3	ug/Kg	1	5	4.6	0.86	2.3
Carbon Disulfide	U	2.3	ug/Kg	1	5	4.6	0.72	2.3
Methylene Chloride	U	12.	ug/Kg	1	25	23.	7.3	12.
Acetone	J	13.	ug/Kg	1	25	23.	4.7	12.
trans-1,2-Dichloroethene	U	2.3	ug/Kg	1	5	4.6	0.65	2.3
Methyl tert-butyl Ether	U	2.3	ug/Kg	1	5	4.6	1.0	2.3
1,1-Dichloroethane	U	2.3	ug/Kg	1	5	4.6	1.6	2.3
cis-1,2-Dichloroethene	U	2.3	ug/Kg	1	5	4.6	0.84	2.3
2,2-Dichloropropane	U	2.3	ug/Kg	1	5	4.6	0.46	2.3
Bromochloromethane	U	2.3	ug/Kg	1	5	4.6	0.84	2.3
Chloroform	U	2.3	ug/Kg	1	5	4.6	0.32	2.3
Carbon Tetrachloride	U	2.3	ug/Kg	1	5	4.6	1.2	2.3
1,1,1-Trichloroethane	U	2.3	ug/Kg	1	5	4.6	0.39	2.3
1,1-Dichloropropene	U	2.3	ug/Kg	1	5	4.6	0.84	2.3
2-Butanone	U	12.	ug/Kg	1	25	23.	5.4	12.
Benzene	U	2.3	ug/Kg	1	5	4.6	0.85	2.3
1,2-Dichloroethane	U	2.3	ug/Kg	1	5	4.6	0.92	2.3
Trichloroethene	U	2.3	ug/Kg	1	5	4.6	0.54	2.3
Dibromomethane	U	2.3	ug/Kg	1	5	4.6	0.47	2.3
1,2-Dichloropropane	U	2.3	ug/Kg	1	5	4.6	1.3	2.3
Bromodichloromethane	U	2.3	ug/Kg	1	5	4.6	0.55	2.3
cis-1,3-Dichloropropene	U	2.3	ug/Kg	1	5	4.6	0.66	2.3
Toluene	U	2.3	ug/Kg	1	5	4.6	1.3	2.3
4-Methyl-2-Pentanone	U	12.	ug/Kg	1	25	23.	5.4	12.
Tetrachloroethene	U	2.3	ug/Kg	1	5	4.6	1.1	2.3
trans-1,3-Dichloropropene	U	2.3	ug/Kg	1	5	4.6	0.79	2.3
1,1,2-Trichloroethane	U	2.3	ug/Kg	1	5	4.6	0.89	2.3
Dibromochloromethane	U	2.3	ug/Kg	1	5	4.6	0.92	2.3
1,3-Dichloropropane	U	2.3	ug/Kg	1	5	4.6	0.86	2.3

600 Technology Way
P.O. Box 540, Scarborough, ME 04070
Tel:(207) 874-2400 Fax:(207) 775-4029

http://www.katahdinlab.com

Report of Analytical Results

Client: Tetra Tech NUS, Inc.
Lab ID: SD4172-3
Client ID: 128B-071210 4-6'
Project: CTO WE19 NS Newport, Soi
SDG: WE19-4

Sample Date: 12-JUL-10
Received Date: 14-JUL-10
Extract Date: 19-JUL-10
Extracted By: HCG
Extraction Method:
Lab Prep Batch: WG79874

Analysis Date: 19-JUL-10
Analyst: HCG
Analysis Method: SW846 8260B
Matrix: SL
% Solids: 93.
Report Date: 02-AUG-10

Compound	Qualifier	Result	Units	Dilution	LOQ	ADJ LOQ	ADJ MDL	ADJ LOD
1,2-Dibromoethane	U	2.3	ug/Kg	1	5	4.6	1.1	2.3
2-Hexanone	U	12.	ug/Kg	1	25	23.	4.4	12.
Chlorobenzene	U	2.3	ug/Kg	1	5	4.6	0.47	2.3
Ethylbenzene	U	2.3	ug/Kg	1	5	4.6	0.60	2.3
1,1,1,2-Tetrachloroethane	U	2.3	ug/Kg	1	5	4.6	0.64	2.3
m+p-Xylenes	U	4.6	ug/Kg	1	10	9.2	1.6	4.6
o-Xylene	U	2.3	ug/Kg	1	5	4.6	1.2	2.3
Styrene	U	2.3	ug/Kg	1	5	4.6	0.47	2.3
Bromoform	U	2.3	ug/Kg	1	5	4.6	0.64	2.3
Isopropylbenzene	U	2.3	ug/Kg	1	5	4.6	0.85	2.3
Bromobenzene	U	2.3	ug/Kg	1	5	4.6	0.68	2.3
N-Propylbenzene	U	2.3	ug/Kg	1	5	4.6	0.76	2.3
1,1,2,2-Tetrachloroethane	U	2.3	ug/Kg	1	5	4.6	0.77	2.3
1,3,5-Trimethylbenzene	U	2.3	ug/Kg	1	5	4.6	0.62	2.3
2-Chlorotoluene	U	2.3	ug/Kg	1	5	4.6	1.0	2.3
1,2,3-Trichloropropane	U	2.3	ug/Kg	1	5	4.6	1.1	2.3
4-Chlorotoluene	U	2.3	ug/Kg	1	5	4.6	0.45	2.3
tert-Butylbenzene	U	2.3	ug/Kg	1	5	4.6	0.83	2.3
1,2,4-Trimethylbenzene	U	2.3	ug/Kg	1	5	4.6	0.80	2.3
P-Isopropyltoluene	U	2.3	ug/Kg	1	5	4.6	0.70	2.3
1,3-Dichlorobenzene	U	2.3	ug/Kg	1	5	4.6	0.57	2.3
1,4-Dichlorobenzene	U	2.3	ug/Kg	1	5	4.6	0.40	2.3
N-Butylbenzene	U	2.3	ug/Kg	1	5	4.6	0.85	2.3
sec-Butylbenzene	U	2.3	ug/Kg	1	5	4.6	0.84	2.3
1,2-Dichlorobenzene	U	2.3	ug/Kg	1	5	4.6	0.72	2.3
1,2-Dibromo-3-Chloropropane	U	2.3	ug/Kg	1	5	4.6	1.4	2.3
Hexachlorobutadiene	U	2.3	ug/Kg	1	5	4.6	0.68	2.3
1,2,4-Trichlorobenzene	U	2.3	ug/Kg	1	5	4.6	0.73	2.3
1,2,3-Trichlorobenzene	U	2.3	ug/Kg	1	5	4.6	0.70	2.3
p-Bromofluorobenzene		96.6	%					
Toluene-D8		101.	%					
1,2-Dichloroethane-D4		117.	%					
Dibromofluoromethane		106.	%					

600 Technology Way
P.O. Box 540, Scarborough, ME 04070
Tel:(207) 874-2400 Fax:(207) 775-4029

http://www.katahdinlab.com

Report of Analytical Results

Client: Tetra Tech NUS, Inc.
Lab ID: SD4063-1
Client ID: TB-070910
Project: CTO WE19 NS Newport, Soi
SDG: WE19-4

Sample Date: 09-JUL-10
Received Date: 10-JUL-10
Extract Date: 19-JUL-10
Extracted By: HCG
Extraction Method:
Lab Prep Batch: WG79874

Analysis Date: 19-JUL-10
Analyst: HCG
Analysis Method: SW846 8260B
Matrix: SL
% Solids: 100
Report Date: 02-AUG-10

Compound	Qualifier	Result	Units	Dilution	LOQ	ADJ LOQ	ADJ MDL	ADJ LOD
Dichlorodifluoromethane	U	5.0	ug/Kg	1	10	10.	0.92	5.0
Chloromethane	U	5.0	ug/Kg	1	10	10.	1.4	5.0
Vinyl Chloride	U	5.0	ug/Kg	1	10	10.	0.87	5.0
Bromomethane	U	5.0	ug/Kg	1	10	10.	1.1	5.0
Chloroethane	U	5.0	ug/Kg	1	10	10.	1.3	5.0
Trichlorofluoromethane	U	5.0	ug/Kg	1	10	10.	0.91	5.0
1,1-Dichloroethene	U	2.5	ug/Kg	1	5	5.0	0.93	2.5
Carbon Disulfide	U	2.5	ug/Kg	1	5	5.0	0.78	2.5
Methylene Chloride	U	12.	ug/Kg	1	25	25.	7.9	12.
Acetone	J	5.9	ug/Kg	1	25	25.	5.1	12.
trans-1,2-Dichloroethene	U	2.5	ug/Kg	1	5	5.0	0.71	2.5
Methyl tert-butyl Ether	U	2.5	ug/Kg	1	5	5.0	1.1	2.5
1,1-Dichloroethane	U	2.5	ug/Kg	1	5	5.0	1.7	2.5
cis-1,2-Dichloroethene	U	2.5	ug/Kg	1	5	5.0	0.91	2.5
2,2-Dichloropropane	U	2.5	ug/Kg	1	5	5.0	0.50	2.5
Bromochloromethane	U	2.5	ug/Kg	1	5	5.0	0.91	2.5
Chloroform	U	2.5	ug/Kg	1	5	5.0	0.35	2.5
Carbon Tetrachloride	U	2.5	ug/Kg	1	5	5.0	1.3	2.5
1,1,1-Trichloroethane	U	2.5	ug/Kg	1	5	5.0	0.42	2.5
1,1-Dichloropropene	U	2.5	ug/Kg	1	5	5.0	0.91	2.5
2-Butanone	U	12.	ug/Kg	1	25	25.	5.9	12.
Benzene	U	2.5	ug/Kg	1	5	5.0	0.92	2.5
1,2-Dichloroethane	U	2.5	ug/Kg	1	5	5.0	1.0	2.5
Trichloroethene	U	2.5	ug/Kg	1	5	5.0	0.59	2.5
Dibromomethane	U	2.5	ug/Kg	1	5	5.0	0.51	2.5
1,2-Dichloropropane	U	2.5	ug/Kg	1	5	5.0	1.4	2.5
Bromodichloromethane	U	2.5	ug/Kg	1	5	5.0	0.60	2.5
cis-1,3-Dichloropropene	U	2.5	ug/Kg	1	5	5.0	0.72	2.5
Toluene	U	2.5	ug/Kg	1	5	5.0	1.4	2.5
4-Methyl-2-Pentanone	U	12.	ug/Kg	1	25	25.	5.9	12.
Tetrachloroethene	U	2.5	ug/Kg	1	5	5.0	1.2	2.5
trans-1,3-Dichloropropene	U	2.5	ug/Kg	1	5	5.0	0.86	2.5
1,1,2-Trichloroethane	U	2.5	ug/Kg	1	5	5.0	0.97	2.5
Dibromochloromethane	U	2.5	ug/Kg	1	5	5.0	1.0	2.5
1,3-Dichloropropane	U	2.5	ug/Kg	1	5	5.0	0.94	2.5

600 Technology Way
P.O. Box 540, Scarborough, ME 04070
Tel:(207) 874-2400 Fax:(207) 775-4029

Report of Analytical Results

Client: Tetra Tech NUS, Inc.
Lab ID: SD4063-1
Client ID: TB-070910
Project: CTO WE19 NS Newport, Soi
SDG: WE19-4

Sample Date: 09-JUL-10
Received Date: 10-JUL-10
Extract Date: 19-JUL-10
Extracted By: HCG
Extraction Method:
Lab Prep Batch: WG79874

Analysis Date: 19-JUL-10
Analyst: HCG
Analysis Method: SW846 8260B
Matrix: SL
% Solids: 100
Report Date: 02-AUG-10

Compound	Qualifier	Result	Units	Dilution	LOQ	ADJ LOQ	ADJ MDL	ADJ LOD
1,2-Dibromoethane	U	2.5	ug/Kg	1	5	5.0	1.2	2.5
2-Hexanone	U	12.	ug/Kg	1	25	25.	4.8	12.
Chlorobenzene	U	2.5	ug/Kg	1	5	5.0	0.51	2.5
Ethylbenzene	U	2.5	ug/Kg	1	5	5.0	0.65	2.5
1,1,1,2-Tetrachloroethane	U	2.5	ug/Kg	1	5	5.0	0.70	2.5
m+p-Xylenes	U	5.0	ug/Kg	1	10	10.	1.7	5.0
o-Xylene	U	2.5	ug/Kg	1	5	5.0	1.3	2.5
Styrene	U	2.5	ug/Kg	1	5	5.0	0.51	2.5
Bromoform	U	2.5	ug/Kg	1	5	5.0	0.70	2.5
Isopropylbenzene	U	2.5	ug/Kg	1	5	5.0	0.92	2.5
Bromobenzene	U	2.5	ug/Kg	1	5	5.0	0.74	2.5
N-Propylbenzene	U	2.5	ug/Kg	1	5	5.0	0.83	2.5
1,1,2,2-Tetrachloroethane	U	2.5	ug/Kg	1	5	5.0	0.84	2.5
1,3,5-Trimethylbenzene	U	2.5	ug/Kg	1	5	5.0	0.67	2.5
2-Chlorotoluene	U	2.5	ug/Kg	1	5	5.0	1.1	2.5
1,2,3-Trichloropropane	U	2.5	ug/Kg	1	5	5.0	1.2	2.5
4-Chlorotoluene	U	2.5	ug/Kg	1	5	5.0	0.49	2.5
tert-Butylbenzene	U	2.5	ug/Kg	1	5	5.0	0.90	2.5
1,2,4-Trimethylbenzene	U	2.5	ug/Kg	1	5	5.0	0.87	2.5
P-Isopropyltoluene	U	2.5	ug/Kg	1	5	5.0	0.76	2.5
1,3-Dichlorobenzene	U	2.5	ug/Kg	1	5	5.0	0.62	2.5
1,4-Dichlorobenzene	U	2.5	ug/Kg	1	5	5.0	0.44	2.5
N-Butylbenzene	U	2.5	ug/Kg	1	5	5.0	0.92	2.5
sec-Butylbenzene	U	2.5	ug/Kg	1	5	5.0	0.91	2.5
1,2-Dichlorobenzene	U	2.5	ug/Kg	1	5	5.0	0.78	2.5
1,2-Dibromo-3-Chloropropane	U	2.5	ug/Kg	1	5	5.0	1.5	2.5
Hexachlorobutadiene	U	2.5	ug/Kg	1	5	5.0	0.74	2.5
1,2,4-Trichlorobenzene	U	2.5	ug/Kg	1	5	5.0	0.79	2.5
1,2,3-Trichlorobenzene	U	2.5	ug/Kg	1	5	5.0	0.76	2.5
p-Bromofluorobenzene		90.3	%					
Toluene-D8		95.0	%					
1,2-Dichloroethane-D4		102.	%					
Dibromofluoromethane		101.	%					

600 Technology Way
P.O. Box 540, Scarborough, ME 04070
Tel:(207) 874-2400 Fax:(207) 775-4029

http://www.katahdinlab.com

Katahdin
ANALYTICAL SERVICES

ACCREDITED IN ACCORDANCE WITH nelac
Cert No E87604

Report of Analytical Results

Client: Tetra Tech NUS, Inc.
Lab ID: SD4172-1
Client ID: TB-071210
Project: CTO WE19 NS Newport, Soi
SDG: WE19-4

Sample Date: 12-JUL-10
Received Date: 14-JUL-10
Extract Date: 19-JUL-10
Extracted By: HCG
Extraction Method:
Lab Prep Batch: WG79874

Analysis Date: 19-JUL-10
Analyst: HCG
Analysis Method: SW846 8260B
Matrix: SL
% Solids: 100
Report Date: 02-AUG-10

Compound	Qualifier	Result	Units	Dilution	LOQ	ADJ LOQ	ADJ MDL	ADJ LOD
Dichlorodifluoromethane	U	5.0	ug/Kg	1	10	10.	0.92	5.0
Chloromethane	U	5.0	ug/Kg	1	10	10.	1.4	5.0
Vinyl Chloride	U	5.0	ug/Kg	1	10	10.	0.87	5.0
Bromomethane	U	5.0	ug/Kg	1	10	10.	1.1	5.0
Chloroethane	U	5.0	ug/Kg	1	10	10.	1.3	5.0
Trichlorofluoromethane	U	5.0	ug/Kg	1	10	10.	0.91	5.0
1,1-Dichloroethene	U	2.5	ug/Kg	1	5	5.0	0.93	2.5
Carbon Disulfide	U	2.5	ug/Kg	1	5	5.0	0.78	2.5
Methylene Chloride	U	12.	ug/Kg	1	25	25.	7.9	12.
Acetone	J	7.2	ug/Kg	1	25	25.	5.1	12.
trans-1,2-Dichloroethene	U	2.5	ug/Kg	1	5	5.0	0.71	2.5
Methyl tert-butyl Ether	U	2.5	ug/Kg	1	5	5.0	1.1	2.5
1,1-Dichloroethane	U	2.5	ug/Kg	1	5	5.0	1.7	2.5
cis-1,2-Dichloroethene	U	2.5	ug/Kg	1	5	5.0	0.91	2.5
2,2-Dichloropropane	U	2.5	ug/Kg	1	5	5.0	0.50	2.5
Bromochloromethane	U	2.5	ug/Kg	1	5	5.0	0.91	2.5
Chloroform	U	2.5	ug/Kg	1	5	5.0	0.35	2.5
Carbon Tetrachloride	U	2.5	ug/Kg	1	5	5.0	1.3	2.5
1,1,1-Trichloroethane	U	2.5	ug/Kg	1	5	5.0	0.42	2.5
1,1-Dichloropropene	U	2.5	ug/Kg	1	5	5.0	0.91	2.5
2-Butanone	U	12.	ug/Kg	1	25	25.	5.9	12.
Benzene	U	2.5	ug/Kg	1	5	5.0	0.92	2.5
1,2-Dichloroethane	U	2.5	ug/Kg	1	5	5.0	1.0	2.5
Trichloroethene	U	2.5	ug/Kg	1	5	5.0	0.59	2.5
Dibromomethane	U	2.5	ug/Kg	1	5	5.0	0.51	2.5
1,2-Dichloropropane	U	2.5	ug/Kg	1	5	5.0	1.4	2.5
Bromodichloromethane	U	2.5	ug/Kg	1	5	5.0	0.60	2.5
cis-1,3-Dichloropropene	U	2.5	ug/Kg	1	5	5.0	0.72	2.5
Toluene	U	2.5	ug/Kg	1	5	5.0	1.4	2.5
4-Methyl-2-Pentanone	U	12.	ug/Kg	1	25	25.	5.9	12.
Tetrachloroethene	U	2.5	ug/Kg	1	5	5.0	1.2	2.5
trans-1,3-Dichloropropene	U	2.5	ug/Kg	1	5	5.0	0.86	2.5
1,1,2-Trichloroethane	U	2.5	ug/Kg	1	5	5.0	0.97	2.5
Dibromochloromethane	U	2.5	ug/Kg	1	5	5.0	1.0	2.5
1,3-Dichloropropane	U	2.5	ug/Kg	1	5	5.0	0.94	2.5

600 Technology Way
P.O. Box 540, Scarborough, ME 04070
Tel:(207) 874-2400 Fax:(207) 775-4029

Report of Analytical Results

Client: Tetra Tech NUS, Inc.
Lab ID: SD4172-1
Client ID: TB-071210
Project: CTO WE19 NS Newport, Soi
SDG: WE19-4

Sample Date: 12-JUL-10
Received Date: 14-JUL-10
Extract Date: 19-JUL-10
Extracted By: HCG
Extraction Method:
Lab Prep Batch: WG79874

Analysis Date: 19-JUL-10
Analyst: HCG
Analysis Method: SW846 8260B
Matrix: SL
% Solids: 100
Report Date: 02-AUG-10

Compound	Qualifier	Result	Units	Dilution	LOQ	ADJ LOQ	ADJ MDL	ADJ LOD
1,2-Dibromoethane	U	2.5	ug/Kg	1	5	5.0	1.2	2.5
2-Hexanone	U	12.	ug/Kg	1	25	25.	4.8	12.
Chlorobenzene	U	2.5	ug/Kg	1	5	5.0	0.51	2.5
Ethylbenzene	U	2.5	ug/Kg	1	5	5.0	0.65	2.5
1,1,1,2-Tetrachloroethane	U	2.5	ug/Kg	1	5	5.0	0.70	2.5
m+p-Xylenes	U	5.0	ug/Kg	1	10	10.	1.7	5.0
o-Xylene	U	2.5	ug/Kg	1	5	5.0	1.3	2.5
Styrene	U	2.5	ug/Kg	1	5	5.0	0.51	2.5
Bromoform	U	2.5	ug/Kg	1	5	5.0	0.70	2.5
Isopropylbenzene	U	2.5	ug/Kg	1	5	5.0	0.92	2.5
Bromobenzene	U	2.5	ug/Kg	1	5	5.0	0.74	2.5
N-Propylbenzene	U	2.5	ug/Kg	1	5	5.0	0.83	2.5
1,1,2,2-Tetrachloroethane	U	2.5	ug/Kg	1	5	5.0	0.84	2.5
1,3,5-Trimethylbenzene	U	2.5	ug/Kg	1	5	5.0	0.67	2.5
2-Chlorotoluene	U	2.5	ug/Kg	1	5	5.0	1.1	2.5
1,2,3-Trichloropropane	U	2.5	ug/Kg	1	5	5.0	1.2	2.5
4-Chlorotoluene	U	2.5	ug/Kg	1	5	5.0	0.49	2.5
tert-Butylbenzene	U	2.5	ug/Kg	1	5	5.0	0.90	2.5
1,2,4-Trimethylbenzene	U	2.5	ug/Kg	1	5	5.0	0.87	2.5
P-Isopropyltoluene	U	2.5	ug/Kg	1	5	5.0	0.76	2.5
1,3-Dichlorobenzene	U	2.5	ug/Kg	1	5	5.0	0.62	2.5
1,4-Dichlorobenzene	U	2.5	ug/Kg	1	5	5.0	0.44	2.5
N-Butylbenzene	U	2.5	ug/Kg	1	5	5.0	0.92	2.5
sec-Butylbenzene	U	2.5	ug/Kg	1	5	5.0	0.91	2.5
1,2-Dichlorobenzene	U	2.5	ug/Kg	1	5	5.0	0.78	2.5
1,2-Dibromo-3-Chloropropane	U	2.5	ug/Kg	1	5	5.0	1.5	2.5
Hexachlorobutadiene	U	2.5	ug/Kg	1	5	5.0	0.74	2.5
1,2,4-Trichlorobenzene	U	2.5	ug/Kg	1	5	5.0	0.79	2.5
1,2,3-Trichlorobenzene	U	2.5	ug/Kg	1	5	5.0	0.76	2.5
p-Bromofluorobenzene		91.3	%					
Toluene-D8		95.6	%					
1,2-Dichloroethane-D4		101.	%					
Dibromofluoromethane		99.1	%					

600 Technology Way
P.O. Box 540, Scarborough, ME 04070
Tel:(207) 874-2400 Fax:(207) 775-4029

http://www.katahdinlab.com

TETRA TECH

INTERNAL CORRESPONDENCE

C-NAVY-09-10-3866W

Date: September 27, 2010

c: File G02124-4.10 (w/enc.-original)
D. Seiken (w/o enc.)

To: J. Forrelli (w/o enc.)

From: Paula DiMattei (no copy)

Subject: Tier II Organic Data Validation, SDG 62171
APPL, Inc
CTO WE19, Site 08 – NUSC Disposal Area, Naval Station Newport, Middletown, RI

PGDN:

18/Soils/	B179-SB1-0001	B179-SB1-0507	B179-SB2-0001
	B179-SB2-0709	B179-SB3-0001	B179-SB3-0709
	B179-SB-DUP01	B179-SB-DUP02	B185A1-SB1-0103
	B185A1-SB1-0708	B185A1-SB2-0103	B185A1-SB2-0305
	B185A1-SB3-0103	B185A1-SB3-0305	B185A1-SB4-0103
	B185A1-SB4-0507	B185A3-SB1-0103	B185A3-SB1-0305

(Field duplicate pairs: B179-SB3-0001/B179-SB-DUP01 and
B179-SB1-0001/B179-SB-DUP02)

1/Groundwater/ GW-B185A3-SB1

1/Rinsate blank/ RB-DPT-072910

Tetra Tech NUS, Inc. (TtNUS) performed a Tier II data validation on the 1,2-propylene glycol dinitrate (PGDN) analytical data for the groundwater and soil samples collected at Site 08 from July 27-29, 2010. The sample collection and analysis was performed according to the Work Plan Addendum for the Remedial Investigation Revision 2 of Site 08, Naval Undersea Systems Center Disposal Area, Naval Station Newport, Rhode Island, June 2010.

The samples were analyzed according to SW-846 method 8330B. The project specific criteria listed in the site Work Plan Addendum were applied for data validation. The data validation was performed in accordance with the Region I EPA-NE Data Validation Functional Guidelines for Evaluating Environmental Analyses, December 1996.

The sample results, validation qualifiers (VQL), and qualifier codes (QLCD) are presented in the enclosed data summary tables. A list of the qualifier codes, which provide the reasons for the validation qualifiers, is enclosed.

The data were evaluated based on the following parameters:

* • Data Completeness
* • Preservation and Technical Holding Times
* • Initial and Continuing Calibrations
* • Blanks
• Surrogate Compounds

* • Matrix Spike/Matrix Spike Duplicate
* • Laboratory Control Sample/Laboratory Control Sample Duplicate
* • Field Duplicates
• Reporting Limits

* All criteria were met for this parameter.
NA None analyzed in this data set.

Surrogate Recoveries

The following table summarizes the surrogate recovery that was outside of the QC limits:

Sample ID	1,2-Dinitrobenzene % Recovery	% Recovery QC Limits	Action	
			(+)	NDs
GW-B185A3-SB1	143	70-130	J	

Although the percent recovery for the surrogate 1,2-dinitrobenzene was above the QC limits; the project accuracy goals are not impacted since the PGDN result in sample GW-B185A3-SB1 is below the project action limit. The positive PGDN result in sample GW-B185A3-SB1 is usable as an estimated value which may be biased high.

Reporting Limits

Non-detected PGDN results were reported to the limit of detection (LOD). Positive results below the limit of quantitation (LOQ) and above the method detection limit (MDL) were qualified as estimated (J) due to uncertainty below the LOQ.

The project quantitation limit (PQL) goals were met for all samples with the exception of two samples (B179-SB1-0001 and B179-SB-DUP02). Samples B179-SB1-0001 and B179-SB-DUP02 were reported as nondetected results with elevated detection limits due to the presence of matrix interference. The elevated detection limits were further qualified as estimated (UJ) due to this uncertainty and noted with a "Q" data validation qualifier code. The project action limit (PAL) goals were still met by the elevated LODs; therefore, data usability is not impacted.

Data Usability Assessment

The data usability assessment was performed to determine if the data met the project data quality objectives for acceptable accuracy, precision, sensitivity, and completeness; and to determine and define the impact of the exceeded quality control indicators on the technical usability of the data. Please refer to the specific sections in the above validation report for further details.

The project goals with respect to accuracy were met for the PGDN data set. The positive PGDN result in sample GW-B185A3-SB1 is estimated due to high serrate recovery; result may be biased high. Although specific method criteria was not met in this instance, data usability is not impacted and the affected positive PGDN result is usable as estimated value.

Data usability is not impacted with regards to accuracy, precision, sensitivity, and completeness.

The project goals with respect to precision, sensitivity, and completeness were met for the PGDN data set. Data usability is not impacted with regards to precision, sensitivity, and completeness.

Tables: Data Summary Tables
Data Validation Qualifiers and Codes

Enclosures: Data Validation Worksheets

Data Validation Qualifiers and Codes

Data Validation Qualifiers:

= No qualifier attached to value (positive hit)
J = Value is estimated
U = Value is not detected
UJ = Value is not detected and estimated
R = Value (positive hit) is not usable
UR = Value was reported as ND but is not usable

Qualifier Codes:

A = Lab Blank Contamination
B = Field Blank Contamination
C = Calibration Noncompliance (e.g. % RSDs, %Ds, ICVs, CCVs, RRFs, etc.)
C01 = GC/MS Tuning Noncompliance
D = MS/MSD Recovery Noncompliance
E = LCS/LCSD Recovery Noncompliance
F = Lab Duplicate Imprecision
G = Field Duplicate Imprecision
H = Holding Time Exceedance
I = ICP Serial Dilution Noncompliance
J = GFAA PDS - GFAA MSA's $r < 0.995$
K = ICP Interference - includes ICS % R Noncompliance
L = Instrument Calibration Range Exceedance
M = Sample Preservation Noncompliance
N = Internal Standard Noncompliance
N01 = Internal Standard Recovery Noncompliance Dioxins
N02 = Recovery Standard Noncompliance Dioxins
N03 = Clean-up Standard Noncompliance Dioxins
O = Poor Instrument Performance (e.g. base-line drifting)
P = Uncertainty below quantitation limit (< QL but ≥ MDL)
Q = Other problems (can encompass a number of issues; e.g. chromatography,interferences, etc.)
R = Surrogates Recovery Noncompliance
S = Pesticide/PCB Resolution
T = % Breakdown Noncompliance for DDT and Endrin
U = % Difference between columns/detectors >25% for positive results determined via GC/HPLC
V = Non-linear calibrations; correlation coefficient $r < 0.995$
W = EMPC result
X = Signal to noise response drop
Y = Percent solids <30%
Z = Uncertainty at 2 sigma deviation is greater than sample activity

PROJ_NO: 02124	NSAMPLE	B179-SB1-0001			B179-SB1-0507			B179-SB2-0001			B179-SB2-0709		
SDG: 62171	LAB_ID	AY18843			AY18844			AY18846			AY18847		
FRACTION: PGDN	SAMP_DATE	7/27/2010			7/27/2010			7/27/2010			7/27/2010		
MEDIA: SOIL	QC_TYPE	NM			NM			NM			NM		
	UNITS	UG/KG			UG/KG			UG/KG			UG/KG		
	PCT_SOLIDS	100.0			100.0			100.0			100.0		
	DUP_OF												
PARAMETER		RESULT	VQL	QLCD	RESULT	VQL	QLCD	RESULT	VQL	QLCD	RESULT	VQL	QLCD
1,2-PROPYLENE GLYCOL DINITRATE		300	UJ	Q	100	U		100	U		100	U	

PROJ_NO: 02124	NSAMPLE	B179-SB3-0001			B179-SB3-0709			B179-SB-DUP01			B179-SB-DUP02		
SDG: 62171	LAB_ID	AY18848			AY18849			AY18850			AY18845		
FRACTION: PGDN	SAMP_DATE	7/27/2010			7/27/2010			7/27/2010			7/27/2010		
MEDIA: SOIL	QC_TYPE	NM			NM			FD			FD		
	UNITS	UG/KG			UG/KG			UG/KG			UG/KG		
	PCT_SOLIDS	100.0			100.0			100.0			100.0		
	DUP_OF							B179-SB3-0001			B179-SB1-0001		
PARAMETER		RESULT	VQL	QLCD	RESULT	VQL	QLCD	RESULT	VQL	QLCD	RESULT	VQL	QLCD
1,2-PROPYLENE GLYCOL DINITRATE		100	U		100	U		100	U		400	UJ	Q

PROJ_NO: 02124	NSAMPLE	B185A1-SB1-0103			B185A1-SB1-0708			B185A1-SB2-0103			B185A1-SB2-0305		
SDG: 62171	LAB_ID	AY18833			AY18834			AY18835			AY18836		
FRACTION: PGDN	SAMP_DATE	7/28/2010			7/28/2010			7/28/2010			7/28/2010		
MEDIA: SOIL	QC_TYPE	NM			NM			NM			NM		
	UNITS	UG/KG			UG/KG			UG/KG			UG/KG		
	PCT_SOLIDS	100.0			100.0			100.0			100.0		
	DUP_OF												
PARAMETER		RESULT	VQL	QLCD	RESULT	VQL	QLCD	RESULT	VQL	QLCD	RESULT	VQL	QLCD
1,2-PROPYLENE GLYCOL DINITRATE		260			100	U		420			100	U	

PROJ_NO: 02124	NSAMPLE	B185A1-SB3-0103			B185A1-SB3-0305			B185A1-SB4-0103			B185A1-SB4-0507		
SDG: 62171	LAB_ID	AY18837			AY18838			AY18839			AY18840		
FRACTION: PGDN	SAMP_DATE	7/28/2010			7/28/2010			7/28/2010			7/28/2010		
MEDIA: SOIL	QC_TYPE	NM			NM			NM			NM		
	UNITS	UG/KG			UG/KG			UG/KG			UG/KG		
	PCT_SOLIDS	100.0			100.0			100.0			100.0		
	DUP_OF												
PARAMETER		RESULT	VQL	QLCD	RESULT	VQL	QLCD	RESULT	VQL	QLCD	RESULT	VQL	QLCD
1,2-PROPYLENE GLYCOL DINITRATE		100	U		100	U		100	U		100	U	

PROJ_NO: 02124	NSAMPLE	B185A3-SB1-0103			B185A3-SB1-0305		
SDG: 62171	LAB_ID	AY18841			AY18842		
FRACTION: PGDN	SAMP_DATE	7/28/2010			7/28/2010		
MEDIA: SOIL	QC_TYPE	NM			NM		
	UNITS	UG/KG			UG/KG		
	PCT_SOLIDS	100.0			100.0		
	DUP_OF						
PARAMETER		RESULT	VQL	QLCD	RESULT	VQL	QLCD
1,2-PROPYLENE GLYCOL DINITRATE		100	U		100	U	

PROJ_NO: 02124	NSAMPLE	GW-B185A3-SB1			RB-DPT-072910		
SDG: 62171	LAB_ID	AY18832			AY18831		
FRACTION: PGDN	SAMP_DATE	7/29/2010			7/29/2010		
MEDIA: WATER	QC_TYPE	NM			RB		
	UNITS	UG/L			UG/L		
	PCT_SOLIDS						
	DUP_OF						
PARAMETER		RESULT	VQL	QLCD	RESULT	VQL	QLCD
1,2-PROPYLENE GLYCOL DINITRATE		0.11	J	RP	0.1	U	

Tetra Tech NUS **INTERNAL CORRESPONDENCE**

TO: **J. FORRELLI** **DATE: SEPTEMBER 28, 2010**

FROM: **A. COGNETTI** **COPIES: DV FILE**

SUBJECT: **ORGANIC DATA VALIDATION: VOC/SVOC/PAH/PEST/PCB**
CTO WE19, NAVSTA NEWPORT
SAMPLE DELIVERY GROUP –SDG CTO WE19-6

SAMPLES: 10/Soil/VOC/SVOC/PAH/PEST/PCB

B185A1-SB1-0103	B185A1-SB1-0708	B185A1-SB2-0103
B185A1-SB2-0305	B185A1-SB3-0103	B185A1-SB3-0305
B185A1-SB4-0103	B185A1-SB4-0507	B185A3-SB1-0103
B185A3-SB1-0305		

1/Aqueous/VOC/SVOC/

RB-DPT-072910

Overview

The sample set for NAVSTA Newport, CTO WE19, SDG WE19-6 consists of ten (10) environmental soil samples and a rinsate blank. All samples were analyzed for volatile organic compounds (VOCs), semivolatile organic compounds (SVOC), polycyclic aromatic hydrocarbons (PAHs), pesticides (PEST) and polychlorinated biphenyls (PCBs).

The samples were collected on July 28 and 29, 2010 and analyzed by Katahdin Analytical Services. All analyses were conducted in accordance with Naval Facilities Engineering Service Center (NFESC) Quality Assurance/Quality Control (QA/QC) criteria using SW-846 Methods 8260B for VOCs, 8270C for SVOCs, 8270C SIM for PAH, 8081 for pesticides and 8082 for PCB analytical and reporting protocol. A Tier 2 data validation was performed on the analyses.

The data contained in this SDG were validated with regard to the following parameters:

* • Data Completeness
• Holding Times
* • GC/MS Tuning
• Initial and Continuing Calibration
• Laboratory Method and/or Field Quality Control Blanks
• Surrogate Spike Recoveries
• Laboratory Control Spike / Laboratory Control Spike Duplicate Recoveries
• Internal Standards Performance
* • Matrix Spike/Matrix Spike Duplicate Results
* • Detection Limits
* • Compound Quantitation
* • Compound Identification

The asterisk (*) indicates that all quality control criteria were met for this parameter. Qualified (if applicable)

analytical results are summarized in Appendix A. Results as reported by the laboratory are presented in Appendix B. Appendix C contains Region I worksheets, and Appendix D contains the documentation to support the findings as discussed in this data validation report. The attached Table summarizes the validation qualifications which are based on the following information:

HOLDING TIME

The holding time until extraction was exceeded for pesticides and PCBs for sample B185A1-SB2-0103. The laboratory noted in their case narrative that the original extract was broken. Positive and nondetected results were qualified as estimated, J and UJ, respectively.

The holding time until extraction was exceeded for PCB sample B185A3-SB1-0103. The sample was re-extracted because of a low surrogate recovery. Nondetected results were qualified as estimated, UJ.

CALIBRATIONS

The VOC continuing calibration percent difference (%D) for bromomethane was greater than the 20% quality control limit on August 5, 2010 @ 8:55 on instrument GCMS-C. The nondetected bromomethane results in the affected samples B185A1-SB2-0305 and B185A1-SB3-0103 were qualified as estimated (UJ).

The SVOC initial calibration relative standard deviation (%RSD) for benzoic acid exceeded the 15% quality control limit on August 3, 2010 on instrument GCMS-U. This noncompliance affects all samples in this SDG. No action was taken on the nondetected benzoic acid results on this basis in the soil samples because benzoic acid results were rejected due to a more severe noncompliance. The nondetected benzoic acid result in RB-DPT-072910 was qualified as estimated (UJ).

The SVOC continuing calibration %Ds for benzoic acid, benzidine and bis(2-ethylhexyl)phthalate were greater than the 20% quality control limit on August 6, 2010 @12:00 on instrument GCMS-U. The nondetected benzoic acid, benzidine and bis(2-ethylhexyl)phthalate results in the affected sample RB-DPT-072910 was qualified as estimated (UJ).

The SVOC continuing calibration %Ds for benzoic acid and benzidine were greater than the 20% quality control limit on August 10, 2010 @ 10:57 on instrument GCMS-U. The nondetected benzoic acid and benzidine results in the affected soil samples B185A1-SB1-0708, B185A1-SB2-0103, B185A1-SB2-0305, B185A1-SB4-0507 and B185A1-SB1-0305 were qualified as rejected due to a more severe noncompliance. No further action was taken.

The SVOC continuing calibration %D for benzoic acid was greater than the 20% quality control limit on August 11, 2010 @ 12:01 on instrument GCMS-U. The nondetected benzoic acid results in the affected soil samples B185A1-SB1-0103, B185A1-SB3-0103, B185A1-SB3-0305, B185A1-SB4-0103 and B185A3-SB1-0103 were qualified as rejected due to a more severe noncompliance. No further action was taken.

The PEST opening continuing calibration on August 10, 2010 @ 12:27, heptachlor and methoxychlor had %Ds on both columns greater than the quality control limit. The nondetected heptachlor and methoxychlor results in the affected sample RB-DPT-072910 were qualified as estimated (UJ).

The PEST continuing calibration on August 16, 2010 @ 13:08 and 19:35 and on August 17, 2010 @ 16:36, endrin ketone had a %D greater than the quality control limit. This noncompliance affects all soil samples. The positive endrin ketone result in sample B185A1-SB3-0305 was qualified as estimated (J). The nondetected results in the affected soil samples were qualified as estimated (UJ).

The PEST continuing calibration on August 17, 2010 @ 16:36, 4,4'-DDT had a %D greater than the quality control limit on column 2. The positive 4,4'-DDT result in sample B185A1-SB3-0305 was taken from column 2 and qualified as estimated (J).

BLANKS

The following contaminants were detected in the VOC laboratory method blanks at the following maximum concentrations:

Contaminant	Maximum Concentration (ug/kg)	Action Level (ug/kg)
Bromomethane [1]	5.0	25.0
Methylene chloride [1]	13.0	130.0
Acetone [1]	6.2	62.0
Acetone [2]	6.0	60.0

(1) Laboratory method blank WG80598 analyzed on August 4, 2010 associated with samples B185A1-SB1-0103, B185A1-SB1-0708, B185A1-SB2-0103, B185A1-SB3-0305, B185A1-SB4-0103, B185A1-SB4-0507, B185A1-SB1-0103 and B185A1-SB1-0305.
(2) Laboratory method blank WG80600 analyzed on August 5, 2010 associated with samples B185A1-SB2-0305 and B185A1-SB3-0103.

An action level of 10X the maximum concentration of common laboratory contaminants methylene chloride and acetone was established in order to evaluate samples for blank contamination. An action level of 5X the maximum concentration of bromomethane was established in order to evaluate samples for blank contamination. Dilution factors, percent soilds and sample aliquots were taken into consideration during the application of all action levels. The positive acetone results were qualified as (U). No qualification was made on positive results greater than the action level in sample B185A1-SB4-0103.

Rinse blank RB-DPT-072910 contained contaminants 2-butanone and acetone. According to Region I EPA Guidelines, rinse blank results will not be used to determine blank action levels for non-aqueous samples.

The following contaminant was detected in the PAH laboratory method blank associated with batch WG80605 affecting all the soil samples.

Contaminant	Maximum Concentration (ug/kg)	Action Level (ug/kg)
Benzo(b)fluoranthene	4.2	21.0

An action level of 5X the maximum concentration of benzo(b)fluoranthene was established in order to evaluate samples for blank contamination. Dilution factors, percent solids and sample aliquots were taken in to consideration during the application of the action level. The positive benzo(b)fluoranthene results in samples B185A1-SB1-0708 and B185A1-SB2-0305 were qualified as (U).

SURROGATE SPIKE RECOVERIES

The percent recovery (%R) of VOC surrogate p-bromofluorobenzene was greater than the upper quality control limit in samples B185A1-SB3-0305 and B185A1-SB2-0305. The %R of surrogate toluene-d8 was greater than the upper quality control limit in sample B185A1-SB3-0103. The positive results in samples B185A1-SB3-0305, B185A1-SB2-0305 and B185A1-SB3-0103 were qualified as estimated (J).

The %R of PAH surrogate 2-methylnaphthalene-d10 was greater than the upper quality control limit in the following samples: B185A1-SB1-0708, B185A1-SB2-0103, B185A1-SB4-0507, B185A3-SB1-0305, B185A1-SB1-0103, B185A1-SB3-0103, B185A1-SB4-0103 and B185A3-SB1-0103. The positive results in the aforementioned samples were qualified as estimated (J).

LABORATORY CONTROL SPIKE/LABORATORY CONTROL SPIKE DUPLICATE

The VOC Laboratory Control sample (LCS) %R for bromochloromethane, dibromomethane and chlorobenzene in batch WG80600 was less than the lower quality control limit but between 80-120%. No action was warranted on the nondetected bromochloromethane, dibromomethane and chlorobenzene results in the affected samples B185A1-SB2-0305 and B185A1-SB3-0103.

The SVOC LCS/LCSD %R for benzoic acid and benzidine was 0% in batch WG80603 affecting all soil samples. The nondetected benzoic acid and benzidine results in the affected samples were qualified as rejected (UR).

The PAH LCS/LCSD %R for fluoranthene in batch WG80425 was less than the lower quality control limit but greater than 10% affecting sample RB-DPT-072910. The nondetected fluoranthene result in sample RB-DPT-072910 was qualified as estimated (UJ). In the same batch, the LCS/LCSD %R for naphthalene and 2-methylnaphthalene was less than the lower quality control limit but greater than 10% and the RPD exceeded the quality control limit. The nondetected naphthalene and 2-methylnaphthalene results in sample RB-DPT-072910 were qualified as estimated (UJ). No action was taken on the low %R of anthracene in the LCSD because the %R in the LCS and the RPD were within quality control limits.

DIFFERENCE BETWEEN COLUMNS/DETECTORS

The relative percent difference (RPD) between columns in the pesticide analyses was greater than 25% in the following samples. Positive results were qualified as estimated (J).

Sample	Analyte	RPD	Qualification
B185A1-SB2-0103	4,4'-DDD	71.1	J
B185A1-SB3-0103	4,4'-DDD	91.9	J
	4,4'-DDT	44.0	J
B185A1-SB3-0305	4,4'-DDT	37.2	J
	Endrin Ketone	28.6	J
B185A1-SB4-0103	4,4'-DDE	56.2	J
B185A1-SB4-0507	Endosulfan I	101.7	J

INTERNAL STANDARDS

The PAH internal standard area of 1,4-dichlorobenzene-d4 and naphthalene-d8 was greater than the upper quality control limit in sample B185A1-SB3-0305. The sample was reanalyzed with similar results.

Associated compounds were nondetected. No action was required.

ADDITIONAL COMMENTS

Positive results reported at concentrations greater than the method detection limit (MDL) but less than the Reporting Limit (RL) were qualified as estimated (J).

The nondetected alpha-chlordane, dieldrin, gamma-chlordane, bis(2-ethylhexyl)phthalate and diethylphthalate results exceeded the project action limits in the soils samples according to the SOW in June 2010.

Nondetected results were reported at the limit of detection (LOD).

EXECUTIVE SUMMARY

Laboratory Performance: Continuing calibration noncompliances in the VOC, SVOC and PEST fractions resulted in the qualification of data. Laboratory method blank contamination was detected in the VOC and PAH fractions. The percent recovery of surrogates was outside quality control limits in the VOC and PAH fractions resulting in the qualification of data. The percent recoveries in LCS/LCSD were outside quality control limits in the SVOC and PAH fractions. The %D between columns in the PEST fraction exceeded quality control limits for several samples.

Other Factors Affecting Data Quality: None.

The data for these analyses were reviewed with reference to the Region I EPA "Data Validation Functional Guidelines - Part II" (12/96), and the Department of Defense (DoD) document entitled, "Quality Systems Manual (QSM) for Environmental Laboratories" (January 2006). The text of this report has been formulated to address only those problem areas affecting data quality.

TetraTech NUS
Ann Cognetti
Chemist/Data Validator

TetraTech NUS
Joseph A. Samchuck
Data Validation Quality Assurance Officer

Attachments:

1. Appendix A - Qualified Analytical Results
2. Appendix B - Results as Reported by the Laboratory

3. Appendix C - Regional Worksheets
4. Appendix D - Support Documentation

APPENDIX A

QUALIFIED LABORATORY RESULTS

Data Validation Qualifier Codes:

A = Lab Blank Contamination
B = Field Blank Contamination
C = Calibration Noncompliance (e.g. % RSDs, %Ds, ICVs, CCVs, RRFs, etc.)
C01 = GC/MS Tuning Noncompliance
D = MS/MSD Recovery Noncompliance
E = LCS/LCSD Recovery Noncompliance
F = Lab Duplicate Imprecision
G = Field Duplicate Imprecision
H = Holding Time Exceedance
I = ICP Serial Dilution Noncompliance
J = GFAA PDS - GFAA MSA's $r < 0.995$
K = ICP Interference - includes ICS % R Noncompliance
L = Instrument Calibration Range Exceedance
M = Sample Preservation Noncompliance
N = Internal Standard Noncompliance
N01 = Internal Standard Recovery Noncompliance Dioxins
N02 = Recovery Standard Noncompliance Dioxins
N03 = Clean-up Standard Noncompliance Dioxins
O = Poor Instrument Performance (e.g. base-line drifting)
P = Uncertainty near detection limit (< 2 x IDL for inorganics and <CRQL for organics)
Q = Other problems (can be any number of issues; e.g. poor chromatography,interferences, etc.)
R = Surrogates Recovery Noncompliance
S = Pesticide/PCB Resolution
T = % Breakdown Noncompliance for DDT and Endrin
U = % Difference between columns/detectors >25% for positive results determined via GC/HPLC
V = Non-linear calibrations; correlation coefficient $r < 0.995$
W = EMPC result
X = Signal to noise response drop
Y = Percent solids <30%
Z = Uncertainty at 2 sigma deviation is greater than sample activity

PROJ_NO: 02124	NSAMPLE	B185A1-SB1-0103			B185A1-SB1-0708			B185A1-SB2-0103			B185A1-SB2-0305		
SDG: WE19-6	LAB_ID	SD4692-2			SD4692-4			SD4692-6			SD4692-8		
FRACTION: OV	SAMP_DATE	7/28/2010			7/28/2010			7/28/2010			7/28/2010		
MEDIA: SOIL	QC_TYPE	NM			NM			NM			NM		
	UNITS	UG/KG			UG/KG			UG/KG			UG/KG		
	PCT_SOLIDS	94.7			91.6			86.6			84.6		
	DUP_OF												
PARAMETER		RESULT	VQL	QLCD	RESULT	VQL	QLCD	RESULT	VQL	QLCD	RESULT	VQL	QLCD
1,1,1,2-TETRACHLOROETHANE		2.1	U		2.1	U		2.4	U		2.5	U	
1,1,1-TRICHLOROETHANE		2.1	U		2.1	U		2.4	U		2.5	U	
1,1,2,2-TETRACHLOROETHANE		2.1	U		2.1	U		2.4	U		2.5	U	
1,1,2-TRICHLOROETHANE		2.1	U		2.1	U		2.4	U		2.5	U	
1,1-DICHLOROETHANE		2.1	U		2.1	U		2.4	U		2.5	U	
1,1-DICHLOROETHENE		2.1	U		2.1	U		2.4	U		2.5	U	
1,1-DICHLOROPROPENE		2.1	U		2.1	U		2.4	U		2.5	U	
1,2,3-TRICHLOROBENZENE		2.1	U		2.1	U		2.4	U		2.5	U	
1,2,3-TRICHLOROPROPANE		2.1	U		2.1	U		2.4	U		2.5	U	
1,2,4-TRICHLOROBENZENE		2.1	U		2.1	U		2.4	U		2.5	U	
1,2,4-TRIMETHYLBENZENE		2.1	U		1.1	J	P	2.4	U		2.5	U	
1,2-DIBROMO-3-CHLOROPROPANE		2.1	U		2.1	U		2.4	U		2.5	U	
1,2-DIBROMOETHANE		2.1	U		2.1	U		2.4	U		2.5	U	
1,2-DICHLOROBENZENE		2.1	U		2.1	U		2.4	U		2.5	U	
1,2-DICHLOROETHANE		2.1	U		2.1	U		2.4	U		2.5	U	
1,2-DICHLOROPROPANE		2.1	U		2.1	U		2.4	U		2.5	U	
1,3,5-TRIMETHYLBENZENE		2.1	U		2.1	U		2.4	U		2.5	U	
1,3-DICHLOROBENZENE		2.1	U		2.1	U		2.4	U		2.5	U	
1,3-DICHLOROPROPANE		2.1	U		2.1	U		2.4	U		2.5	U	
1,4-DICHLOROBENZENE		2.1	U		2.1	U		2.4	U		2.5	U	
2,2-DICHLOROPROPANE		2.1	U		2.1	U		2.4	U		2.5	U	
2-BUTANONE		10	U		10	U		12	U		12	U	
2-CHLOROTOLUENE		2.1	U		2.1	U		2.4	U		2.5	U	
2-HEXANONE		10	U		10	U		12	U		12	U	
4-CHLOROTOLUENE		2.1	U		2.1	U		2.4	U		2.5	U	
4-ISOPROPYLTOLUENE		2.1	U		2.1	U		2.4	U		2.5	U	
4-METHYL-2-PENTANONE		10	U		10	U		12	U		12	U	
ACETONE		40	U	A	23	U	A	43	U	A	43	U	A
BENZENE		2.1	U		2.1	U		2.4	U		2.5	U	
BROMOBENZENE		2.1	U		2.1	U		2.4	U		2.5	U	
BROMOCHLOROMETHANE		2.1	U		2.1	U		2.4	U		2.5	U	
BROMODICHLOROMETHANE		2.1	U		2.1	U		2.4	U		2.5	U	
BROMOFORM		2.1	U		2.1	U		2.4	U		2.5	U	
BROMOMETHANE		4.2	U		4.2	U		4.9	U		5	UJ	C
CARBON DISULFIDE		2.1	U		2.1	U		2.4	U		4.9	J	PR
CARBON TETRACHLORIDE		2.1	U		2.1	U		2.4	U		2.5	U	

PROJ_NO: 02124	NSAMPLE	B185A1-SB3-0103			B185A1-SB3-0305			B185A1-SB4-0103			B185A1-SB4-0507		
SDG: WE19-6	LAB_ID	SD4692-10			SD4692-12			SD4692-14			SD4692-16		
FRACTION: OV	SAMP_DATE	7/28/2010			7/28/2010			7/28/2010			7/28/2010		
MEDIA: SOIL	QC_TYPE	NM			NM			NM			NM		
	UNITS	UG/KG			UG/KG			UG/KG			UG/KG		
	PCT_SOLIDS	83.8			89.4			77.7			86.8		
	DUP_OF												
PARAMETER		RESULT	VQL	QLCD	RESULT	VQL	QLCD	RESULT	VQL	QLCD	RESULT	VQL	QLCD
1,1,1,2-TETRACHLOROETHANE		2.5	U		2.4	U		2.4	U		2.4	U	
1,1,1-TRICHLOROETHANE		2.5	U		2.4	U		2.4	U		2.4	U	
1,1,2,2-TETRACHLOROETHANE		2.5	U		2.4	U		2.4	U		2.4	U	
1,1,2-TRICHLOROETHANE		2.5	U		2.4	U		2.4	U		2.4	U	
1,1-DICHLOROETHANE		2.5	U		2.4	U		2.4	U		2.4	U	
1,1-DICHLOROETHENE		2.5	U		2.4	U		2.4	U		2.4	U	
1,1-DICHLOROPROPENE		2.5	U		2.4	U		2.4	U		2.4	U	
1,2,3-TRICHLOROBENZENE		2.5	U		2.4	U		2.4	U		2.4	U	
1,2,3-TRICHLOROPROPANE		2.5	U		2.4	U		2.4	U		2.4	U	
1,2,4-TRICHLOROBENZENE		2.5	U		2.4	U		2.4	U		2.4	U	
1,2,4-TRIMETHYLBENZENE		2.5	U		2.4	U		2.4	U		2.4	U	
1,2-DIBROMO-3-CHLOROPROPANE		2.5	U		2.4	U		2.4	U		2.4	U	
1,2-DIBROMOETHANE		2.5	U		2.4	U		2.4	U		2.4	U	
1,2-DICHLOROBENZENE		2.5	U		2.4	U		2.4	U		2.4	U	
1,2-DICHLOROETHANE		2.5	U		2.4	U		2.4	U		2.4	U	
1,2-DICHLOROPROPANE		2.5	U		2.4	U		2.4	U		2.4	U	
1,3,5-TRIMETHYLBENZENE		2.5	U		2.4	U		2.4	U		2.4	U	
1,3-DICHLOROBENZENE		2.5	U		2.4	U		2.4	U		2.4	U	
1,3-DICHLOROPROPANE		2.5	U		2.4	U		2.4	U		2.4	U	
1,4-DICHLOROBENZENE		2.5	U		2.4	U		2.4	U		2.4	U	
2,2-DICHLOROPROPANE		2.5	U		2.4	U		2.4	U		2.4	U	
2-BUTANONE		12	U		8.5	J	PR	15	J	P	12	U	
2-CHLOROTOLUENE		2.5	U		2.4	U		2.4	U		2.4	U	
2-HEXANONE		12	U		12	U		12	U		12	U	
4-CHLOROTOLUENE		2.5	U		2.4	U		2.4	U		2.4	U	
4-ISOPROPYLTOLUENE		2.5	U		2.4	U		2.4	U		2.4	U	
4-METHYL-2-PENTANONE		12	U		12	U		12	U		12	U	
ACETONE		60	U	A	65	U	A	200			15	U	A
BENZENE		2.5	U		2.4	U		2.4	U		2.4	U	
BROMOBENZENE		2.5	U		2.4	U		2.4	U		2.4	U	
BROMOCHLOROMETHANE		2.5	U		2.4	U		2.4	U		2.4	U	
BROMODICHLOROMETHANE		2.5	U		2.4	U		2.4	U		2.4	U	
BROMOFORM		2.5	U		2.4	U		2.4	U		2.4	U	
BROMOMETHANE		5	UJ	C	4.7	U		4.8	U		4.7	U	
CARBON DISULFIDE		2.5	U		3.3	J	PR	2.4	U		2.4	U	
CARBON TETRACHLORIDE		2.5	U		2.4	U		2.4	U		2.4	U	

PROJ_NO: 02124	NSAMPLE	B185A3-SB1-0103			B185A3-SB1-0305		
SDG: WE19-6	LAB_ID	SD4692-18			SD4692-20		
FRACTION: OV	SAMP_DATE	7/28/2010			7/28/2010		
MEDIA: SOIL	QC_TYPE	NM			NM		
	UNITS	UG/KG			UG/KG		
	PCT_SOLIDS	74.6			92.8		
	DUP_OF						
PARAMETER		RESULT	VQL	QLCD	RESULT	VQL	QLCD
1,1,1,2-TETRACHLOROETHANE		3	U		2	U	
1,1,1-TRICHLOROETHANE		3	U		2	U	
1,1,2,2-TETRACHLOROETHANE		3	U		2	U	
1,1,2-TRICHLOROETHANE		3	U		2	U	
1,1-DICHLOROETHANE		3	U		2	U	
1,1-DICHLOROETHENE		3	U		2	U	
1,1-DICHLOROPROPENE		3	U		2	U	
1,2,3-TRICHLOROBENZENE		3	U		2	U	
1,2,3-TRICHLOROPROPANE		3	U		2	U	
1,2,4-TRICHLOROBENZENE		3	U		2	U	
1,2,4-TRIMETHYLBENZENE		3	U		2	U	
1,2-DIBROMO-3-CHLOROPROPANE		3	U		2	U	
1,2-DIBROMOETHANE		3	U		2	U	
1,2-DICHLOROBENZENE		3	U		2	U	
1,2-DICHLOROETHANE		3	U		2	U	
1,2-DICHLOROPROPANE		3	U		2	U	
1,3,5-TRIMETHYLBENZENE		3	U		2	U	
1,3-DICHLOROBENZENE		3	U		2	U	
1,3-DICHLOROPROPANE		3	U		2	U	
1,4-DICHLOROBENZENE		3	U		2	U	
2,2-DICHLOROPROPANE		3	U		2	U	
2-BUTANONE		15	U		9.9	U	
2-CHLOROTOLUENE		3	U		2	U	
2-HEXANONE		15	U		9.9	U	
4-CHLOROTOLUENE		3	U		2	U	
4-ISOPROPYLTOLUENE		3	U		2	U	
4-METHYL-2-PENTANONE		15	U		9.9	U	
ACETONE		73	U	A	44	U	A
BENZENE		3	U		2	U	
BROMOBENZENE		3	U		2	U	
BROMOCHLOROMETHANE		3	U		2	U	
BROMODICHLOROMETHANE		3	U		2	U	
BROMOFORM		3	U		2	U	
BROMOMETHANE		6	U		4	U	
CARBON DISULFIDE		3	U		2	U	
CARBON TETRACHLORIDE		3	U		2	U	

PROJ_NO: 02124	NSAMPLE	B185A1-SB1-0103			B185A1-SB1-0708			B185A1-SB2-0103			B185A1-SB2-0305		
SDG: WE19-6	LAB_ID	SD4692-2			SD4692-4			SD4692-6			SD4692-8		
FRACTION: OV	SAMP_DATE	7/28/2010			7/28/2010			7/28/2010			7/28/2010		
MEDIA: SOIL	QC_TYPE	NM			NM			NM			NM		
	UNITS	UG/KG			UG/KG			UG/KG			UG/KG		
	PCT_SOLIDS	94.7			91.6			86.6			84.6		
	DUP_OF												
PARAMETER		RESULT	VQL	QLCD	RESULT	VQL	QLCD	RESULT	VQL	QLCD	RESULT	VQL	QLCD
CHLOROBENZENE		2.1	U		2.1	U		2.4	U		2.5	U	
CHLORODIBROMOMETHANE		2.1	U		2.1	U		2.4	U		2.5	U	
CHLOROETHANE		4.2	U		4.2	U		4.9	U		5	U	
CHLOROFORM		2.1	U		2.1	U		2.4	U		2.5	U	
CHLOROMETHANE		4.2	U		4.2	U		4.9	U		5	U	
CIS-1,2-DICHLOROETHENE		2.1	U		2.1	U		6.4			2.5	U	
CIS-1,3-DICHLOROPROPENE		2.1	U		2.1	U		2.4	U		2.5	U	
DIBROMOMETHANE		2.1	U		2.1	U		2.4	U		2.5	U	
DICHLORODIFLUOROMETHANE		4.2	U		4.2	U		4.9	U		5	U	
ETHYLBENZENE		2.1	U		2.1	U		2.4	U		2.5	U	
HEXACHLOROBUTADIENE		2.1	U		2.1	U		2.4	U		2.5	U	
ISOPROPYLBENZENE		2.1	U		1.6	J	P	2.4	U		2.5	U	
M+P-XYLENES		4.2	U		4.2	U		4.9	U		5	U	
METHYL TERT-BUTYL ETHER		2.1	U		2.1	U		2.4	U		2.5	U	
METHYLENE CHLORIDE		10	U		10	U		12	U		12	U	
N-BUTYLBENZENE		2.1	U		3.3	J	P	2.4	U		2.5	U	
N-PROPYLBENZENE		2.1	U		2.2	J	P	2.4	U		2.5	U	
O-XYLENE		2.1	U		2.1	U		2.4	U		2.5	U	
SEC-BUTYLBENZENE		2.1	U		6.7			2.4	U		2.5	U	
STYRENE		2.1	U		2.1	U		2.4	U		2.5	U	
TERT-BUTYLBENZENE		2.1	U		2.1	U		2.4	U		2.5	U	
TETRACHLOROETHENE		2.1	U		2.1	U		2.4	U		2.5	U	
TOLUENE		2.1	U		2.1	U		2.4	U		2.5	U	
TRANS-1,2-DICHLOROETHENE		2.1	U		2.1	U		9.3			2.5	U	
TRANS-1,3-DICHLOROPROPENE		2.1	U		2.1	U		2.4	U		2.5	U	
TRICHLOROETHENE		2.1	U		2.1	U		7.3			2.5	U	
TRICHLOROFLUOROMETHANE		4.2	U		4.2	U		4.9	U		5	U	
VINYL CHLORIDE		4.2	U		4.2	U		2.8	J	P	5	U	

PROJ_NO: 02124	NSAMPLE	B185A1-SB3-0103	B185A1-SB3-0305	B185A1-SB4-0103	B185A1-SB4-0507
SDG: WE19-6	LAB_ID	SD4692-10	SD4692-12	SD4692-14	SD4692-16
FRACTION: OV	SAMP_DATE	7/28/2010	7/28/2010	7/28/2010	7/28/2010
MEDIA: SOIL	QC_TYPE	NM	NM	NM	NM
	UNITS	UG/KG	UG/KG	UG/KG	UG/KG
	PCT_SOLIDS	83.8	89.4	77.7	86.8
	DUP_OF				

PARAMETER	RESULT	VQL	QLCD	RESULT	VQL	QLCD	RESULT	VQL	QLCD	RESULT	VQL	QLCD
CHLOROBENZENE	2.5	U		2.4	U		2.4	U		2.4	U	
CHLORODIBROMOMETHANE	2.5	U		2.4	U		2.4	U		2.4	U	
CHLOROETHANE	5	U		4.7	U		4.8	U		4.7	U	
CHLOROFORM	2.5	U		2.4	U		2.4	U		2.4	U	
CHLOROMETHANE	5	U		4.7	U		4.8	U		4.7	U	
CIS-1,2-DICHLOROETHENE	2.5	U		2.4	U		2.4	U		2.4	U	
CIS-1,3-DICHLOROPROPENE	2.5	U		2.4	U		2.4	U		2.4	U	
DIBROMOMETHANE	2.5	U		2.4	U		2.4	U		2.4	U	
DICHLORODIFLUOROMETHANE	5	U		4.7	U		4.8	U		4.7	U	
ETHYLBENZENE	2.5	U		2.4	U		2.4	U		2.4	U	
HEXACHLOROBUTADIENE	2.5	U		2.4	U		2.4	U		2.4	U	
ISOPROPYLBENZENE	2.5	U		2.4	U		2.4	U		2.4	U	
M+P-XYLENES	5	U		4.7	U		4.8	U		4.7	U	
METHYL TERT-BUTYL ETHER	2.5	U		2.4	U		2.4	U		2.4	U	
METHYLENE CHLORIDE	12	U		12	U		12	U		12	U	
N-BUTYLBENZENE	2.5	U		2.4	U		2.4	U		2.4	U	
N-PROPYLBENZENE	2.5	U		2.4	U		2.4	U		2.4	U	
O-XYLENE	2.5	U		2.4	U		2.4	U		2.4	U	
SEC-BUTYLBENZENE	2.5	U		2.4	U		2.4	U		2.4	U	
STYRENE	2.5	U		2.4	U		2.4	U		2.4	U	
TERT-BUTYLBENZENE	2.5	U		2.4	U		2.4	U		2.4	U	
TETRACHLOROETHENE	2.5	U		2.4	U		2.4	U		7.4		
TOLUENE	2.5	U		2.4	U		2.4	U		2.4	U	
TRANS-1,2-DICHLOROETHENE	2.5	U		2.4	U		2.4	U		2.4	U	
TRANS-1,3-DICHLOROPROPENE	2.5	U		2.4	U		2.4	U		2.4	U	
TRICHLOROETHENE	0.75	J	PR	2.4	U		1.1	J	P	1.4	J	P
TRICHLOROFLUOROMETHANE	5	U		4.7	U		4.8	U		4.7	U	
VINYL CHLORIDE	5	U		4.7	U		4.8	U		4.7	U	

PROJ_NO: 02124	NSAMPLE	B185A3-SB1-0103			B185A3-SB1-0305		
SDG: WE19-6	LAB_ID	SD4692-18			SD4692-20		
FRACTION: OV	SAMP_DATE	7/28/2010			7/28/2010		
MEDIA: SOIL	QC_TYPE	NM			NM		
	UNITS	UG/KG			UG/KG		
	PCT_SOLIDS	74.6			92.8		
	DUP_OF						
PARAMETER		RESULT	VQL	QLCD	RESULT	VQL	QLCD
CHLOROBENZENE		3	U		2	U	
CHLORODIBROMOMETHANE		3	U		2	U	
CHLOROETHANE		6	U		4	U	
CHLOROFORM		3	U		2	U	
CHLOROMETHANE		6	U		4	U	
CIS-1,2-DICHLOROETHENE		3	U		2	U	
CIS-1,3-DICHLOROPROPENE		3	U		2	U	
DIBROMOMETHANE		3	U		2	U	
DICHLORODIFLUOROMETHANE		6	U		4	U	
ETHYLBENZENE		3	U		2	U	
HEXACHLOROBUTADIENE		3	U		2	U	
ISOPROPYLBENZENE		3	U		2	U	
M+P-XYLENES		6	U		4	U	
METHYL TERT-BUTYL ETHER		3	U		2	U	
METHYLENE CHLORIDE		15	U		9.9	U	
N-BUTYLBENZENE		3	U		2	U	
N-PROPYLBENZENE		3	U		2	U	
O-XYLENE		3	U		2	U	
SEC-BUTYLBENZENE		3	U		2	U	
STYRENE		3	U		2	U	
TERT-BUTYLBENZENE		3	U		2	U	
TETRACHLOROETHENE		3	U		2	U	
TOLUENE		3	U		2	U	
TRANS-1,2-DICHLOROETHENE		3	U		2	U	
TRANS-1,3-DICHLOROPROPENE		3	U		2	U	
TRICHLOROETHENE		3	U		2	U	
TRICHLOROFLUOROMETHANE		6	U		4	U	
VINYL CHLORIDE		6	U		4	U	

PROJ_NO: 02124	NSAMPLE	RB-DPT-072910
SDG: WE19-6	LAB_ID	SD4621-1
FRACTION: OV	SAMP_DATE	7/29/2010
MEDIA: WATER	QC_TYPE	NM
	UNITS	UG/L
	PCT_SOLIDS	0.0
	DUP_OF	

PARAMETER	RESULT	VQL	QLCD
1,1,1,2-TETRACHLOROETHANE	0.5	U	
1,1,1-TRICHLOROETHANE	0.5	U	
1,1,2,2-TETRACHLOROETHANE	0.5	U	
1,1,2-TRICHLOROETHANE	0.5	U	
1,1-DICHLOROETHANE	0.5	U	
1,1-DICHLOROETHENE	0.5	U	
1,1-DICHLOROPROPENE	0.5	U	
1,2,3-TRICHLOROBENZENE	0.5	U	
1,2,3-TRICHLOROPROPANE	0.5	U	
1,2,4-TRICHLOROBENZENE	0.5	U	
1,2,4-TRIMETHYLBENZENE	0.5	U	
1,2-DIBROMO-3-CHLOROPROPANE	0.75	U	
1,2-DIBROMOETHANE	0.5	U	
1,2-DICHLOROBENZENE	0.5	U	
1,2-DICHLOROETHANE	0.5	U	
1,2-DICHLOROPROPANE	0.5	U	
1,3,5-TRIMETHYLBENZENE	0.5	U	
1,3-DICHLOROBENZENE	0.5	U	
1,3-DICHLOROPROPANE	0.5	U	
1,4-DICHLOROBENZENE	0.5	U	
2,2-DICHLOROPROPANE	0.5	U	
2-BUTANONE	3.3	J	P
2-CHLOROTOLUENE	0.5	U	
2-HEXANONE	2.5	U	
4-CHLOROTOLUENE	0.5	U	
4-ISOPROPYLTOLUENE	0.5	U	
4-METHYL-2-PENTANONE	2.5	U	
ACETONE	32		
BENZENE	0.5	U	
BROMOBENZENE	0.5	U	
BROMOCHLOROMETHANE	0.5	U	
BROMODICHLOROMETHANE	0.5	U	
BROMOFORM	0.5	U	
BROMOMETHANE	1	U	
CARBON DISULFIDE	0.5	U	

PROJ_NO: 02124	NSAMPLE	RB-DPT-072910
SDG: WE19-6	LAB_ID	SD4621-1
FRACTION: OV	SAMP_DATE	7/29/2010
MEDIA: WATER	QC_TYPE	NM
	UNITS	UG/L
	PCT_SOLIDS	0.0
	DUP_OF	

PARAMETER	RESULT	VQL	QLCD
CARBON TETRACHLORIDE	0.5	U	
CHLOROBENZENE	0.5	U	
CHLORODIBROMOMETHANE	0.5	U	
CHLOROETHANE	1	U	
CHLOROFORM	0.5	U	
CHLOROMETHANE	1	U	
CIS-1,2-DICHLOROETHENE	0.5	U	
CIS-1,3-DICHLOROPROPENE	0.5	U	
DIBROMOMETHANE	0.5	U	
DICHLORODIFLUOROMETHANE	1	U	
ETHYLBENZENE	0.5	U	
HEXACHLOROBUTADIENE	0.5	U	
ISOPROPYLBENZENE	0.5	U	
M+P-XYLENES	1	U	
METHYL TERT-BUTYL ETHER	0.5	U	
METHYLENE CHLORIDE	2.5	U	
N-BUTYLBENZENE	0.5	U	
N-PROPYLBENZENE	0.5	U	
O-XYLENE	0.5	U	
SEC-BUTYLBENZENE	0.5	U	
STYRENE	0.5	U	
TERT-BUTYLBENZENE	0.5	U	
TETRACHLOROETHENE	0.5	U	
TOLUENE	0.5	U	
TRANS-1,2-DICHLOROETHENE	0.5	U	
TRANS-1,3-DICHLOROPROPENE	0.5	U	
TRICHLOROETHENE	0.5	U	
TRICHLOROFLUOROMETHANE	1	U	
VINYL CHLORIDE	1	U	

PROJ_NO: 02124 SDG: WE19-6 FRACTION: OS MEDIA: SOIL	NSAMPLE	B185A1-SB1-0103			B185A1-SB1-0708			B185A1-SB2-0103			B185A1-SB2-0305		
	LAB_ID	SD4692-1			SD4692-3			SD4692-5			SD4692-7		
	SAMP_DATE	7/28/2010			7/28/2010			7/28/2010			7/28/2010		
	QC_TYPE	NM			NM			NM			NM		
	UNITS	UG/KG			UG/KG			UG/KG			UG/KG		
	PCT_SOLIDS	88.0			92.8			86.4			84.8		
	DUP_OF												
PARAMETER		RESULT	VQL	QLCD	RESULT	VQL	QLCD	RESULT	VQL	QLCD	RESULT	VQL	QLCD
1,1-BIPHENYL		280	U		260	U		280	U		290	U	
1,2,4-TRICHLOROBENZENE		280	U		260	U		280	U		290	U	
1,2-DICHLOROBENZENE		280	U		260	U		280	U		290	U	
1,2-DIPHENYLHYDRAZINE		550	U		520	U		560	U		570	U	
1,3-DICHLOROBENZENE		280	U		260	U		280	U		290	U	
1,4-DICHLOROBENZENE		280	U		260	U		280	U		290	U	
2,2'-OXYBIS(1-CHLOROPROPANE)		280	U		260	U		280	U		290	U	
2,4,5-TRICHLOROPHENOL		680	U		640	U		700	U		710	U	
2,4,6-TRICHLOROPHENOL		280	U		260	U		280	U		290	U	
2,4-DICHLOROPHENOL		280	U		260	U		280	U		290	U	
2,4-DIMETHYLPHENOL		280	U		260	U		280	U		290	U	
2,4-DINITROPHENOL		680	U		640	U		700	U		710	U	
2,4-DINITROTOLUENE		280	U		260	U		280	U		290	U	
2,6-DICHLOROPHENOL		280	U		260	U		280	U		290	U	
2,6-DINITROTOLUENE		280	U		260	U		280	U		290	U	
2-CHLORONAPHTHALENE		280	U		260	U		280	U		290	U	
2-CHLOROPHENOL		280	U		260	U		280	U		290	U	
2-METHYLPHENOL		280	U		260	U		280	U		290	U	
2-NITROANILINE		680	U		640	U		120	J	P	710	U	
2-NITROPHENOL		280	U		260	U		280	U		290	U	
3&4-METHYLPHENOL		280	U		260	U		280	U		290	U	
3,3'-DICHLOROBENZIDINE		280	U		260	U		280	U		290	U	
3-NITROANILINE		680	U		640	U		700	U		710	U	
4,6-DINITRO-2-METHYLPHENOL		680	U		640	U		700	U		710	U	
4-BROMOPHENYL PHENYL ETHER		280	U		260	U		280	U		290	U	
4-CHLORO-3-METHYLPHENOL		280	U		260	U		280	U		290	U	
4-CHLOROANILINE		280	U		260	U		280	U		290	U	
4-CHLOROPHENYL PHENYL ETHER		280	U		260	U		280	U		290	U	
4-NITROANILINE		680	U		640	U		700	U		710	U	
4-NITROPHENOL		680	U		640	U		700	U		710	U	
BENZIDINE		1200	UR	E	1200	UR	E	1300	UR	E	1300	UR	E
BENZOIC ACID		680	UR	E	640	UR	E	700	UR	E	710	UR	E
BENZYL ALCOHOL		550	U		520	U		560	U		570	U	
BIS(2-CHLOROETHOXY)METHANE		280	U		260	U		280	U		290	U	
BIS(2-CHLOROETHYL)ETHER		280	U		260	U		280	U		290	U	

PROJ_NO: 02124 SDG: WE19-6 FRACTION: OS MEDIA: SOIL	NSAMPLE	B185A1-SB3-0103			B185A1-SB3-0305			B185A1-SB4-0103			B185A1-SB4-0507		
	LAB_ID	SD4692-9			SD4692-11			SD4692-13			SD4692-15		
	SAMP_DATE	7/28/2010			7/28/2010			7/28/2010			7/28/2010		
	QC_TYPE	NM			NM			NM			NM		
	UNITS	UG/KG			UG/KG			UG/KG			UG/KG		
	PCT_SOLIDS	86.1			82.2			83.1			76.1		
	DUP_OF												
PARAMETER		RESULT	VQL	QLCD	RESULT	VQL	QLCD	RESULT	VQL	QLCD	RESULT	VQL	QLCD
1,1-BIPHENYL		280	U		290	U		290	U		320	U	
1,2,4-TRICHLOROBENZENE		280	U		290	U		290	U		320	U	
1,2-DICHLOROBENZENE		280	U		290	U		290	U		320	U	
1,2-DIPHENYLHYDRAZINE		560	U		580	U		590	U		630	U	
1,3-DICHLOROBENZENE		280	U		290	U		290	U		320	U	
1,4-DICHLOROBENZENE		280	U		290	U		290	U		320	U	
2,2'-OXYBIS(1-CHLOROPROPANE)		280	U		290	U		290	U		320	U	
2,4,5-TRICHLOROPHENOL		700	U		720	U		730	U		790	U	
2,4,6-TRICHLOROPHENOL		280	U		290	U		290	U		320	U	
2,4-DICHLOROPHENOL		280	U		290	U		290	U		320	U	
2,4-DIMETHYLPHENOL		280	U		290	U		290	U		320	U	
2,4-DINITROPHENOL		700	U		720	U		730	U		790	U	
2,4-DINITROTOLUENE		280	U		290	U		290	U		320	U	
2,6-DICHLOROPHENOL		280	U		290	U		290	U		320	U	
2,6-DINITROTOLUENE		280	U		290	U		290	U		320	U	
2-CHLORONAPHTHALENE		280	U		290	U		290	U		320	U	
2-CHLOROPHENOL		280	U		290	U		290	U		320	U	
2-METHYLPHENOL		280	U		290	U		290	U		320	U	
2-NITROANILINE		700	U		720	U		730	U		790	U	
2-NITROPHENOL		280	U		290	U		290	U		320	U	
3&4-METHYLPHENOL		280	U		290	U		290	U		320	U	
3,3'-DICHLOROBENZIDINE		280	U		290	U		290	U		320	U	
3-NITROANILINE		700	U		720	U		730	U		790	U	
4,6-DINITRO-2-METHYLPHENOL		700	U		720	U		730	U		790	U	
4-BROMOPHENYL PHENYL ETHER		280	U		290	U		290	U		320	U	
4-CHLORO-3-METHYLPHENOL		280	U		290	U		290	U		320	U	
4-CHLOROANILINE		280	U		290	U		290	U		320	U	
4-CHLOROPHENYL PHENYL ETHER		280	U		290	U		290	U		320	U	
4-NITROANILINE		700	U		720	U		730	U		790	U	
4-NITROPHENOL		700	U		720	U		730	U		790	U	
BENZIDINE		1300	UR	E	1300	UR	E	1300	UR	E	1400	UR	E
BENZOIC ACID		700	UR	E	720	UR	E	730	UR	E	790	UR	E
BENZYL ALCOHOL		560	U		580	U		590	U		630	U	
BIS(2-CHLOROETHOXY)METHANE		280	U		290	U		290	U		320	U	
BIS(2-CHLOROETHYL)ETHER		280	U		290	U		290	U		320	U	

PROJ_NO: 02124	NSAMPLE	B185A3-SB1-0103			B185A3-SB1-0305		
SDG: WE19-6	LAB_ID	SD4692-17			SD4692-19		
FRACTION: OS	SAMP_DATE	7/28/2010			7/28/2010		
MEDIA: SOIL	QC_TYPE	NM			NM		
	UNITS	UG/KG			UG/KG		
	PCT_SOLIDS	86.9			86.8		
	DUP_OF						
PARAMETER		RESULT	VQL	QLCD	RESULT	VQL	QLCD
1,1-BIPHENYL		280	U		270	U	
1,2,4-TRICHLOROBENZENE		280	U		270	U	
1,2-DICHLOROBENZENE		280	U		270	U	
1,2-DIPHENYLHYDRAZINE		560	U		540	U	
1,3-DICHLOROBENZENE		280	U		270	U	
1,4-DICHLOROBENZENE		280	U		270	U	
2,2'-OXYBIS(1-CHLOROPROPANE)		280	U		270	U	
2,4,5-TRICHLOROPHENOL		700	U		670	U	
2,4,6-TRICHLOROPHENOL		280	U		270	U	
2,4-DICHLOROPHENOL		280	U		270	U	
2,4-DIMETHYLPHENOL		280	U		270	U	
2,4-DINITROPHENOL		700	U		670	U	
2,4-DINITROTOLUENE		280	U		270	U	
2,6-DICHLOROPHENOL		280	U		270	U	
2,6-DINITROTOLUENE		280	U		270	U	
2-CHLORONAPHTHALENE		280	U		270	U	
2-CHLOROPHENOL		280	U		270	U	
2-METHYLPHENOL		280	U		270	U	
2-NITROANILINE		700	U		670	U	
2-NITROPHENOL		280	U		270	U	
3&4-METHYLPHENOL		280	U		270	U	
3,3'-DICHLOROBENZIDINE		280	U		270	U	
3-NITROANILINE		700	U		670	U	
4,6-DINITRO-2-METHYLPHENOL		700	U		670	U	
4-BROMOPHENYL PHENYL ETHER		280	U		270	U	
4-CHLORO-3-METHYLPHENOL		280	U		270	U	
4-CHLOROANILINE		280	U		270	U	
4-CHLOROPHENYL PHENYL ETHER		280	U		270	U	
4-NITROANILINE		700	U		670	U	
4-NITROPHENOL		700	U		670	U	
BENZIDINE		1300	UR	E	1200	UR	E
BENZOIC ACID		700	UR	E	670	UR	E
BENZYL ALCOHOL		560	U		540	U	
BIS(2-CHLOROETHOXY)METHANE		280	U		270	U	
BIS(2-CHLOROETHYL)ETHER		280	U		270	U	

PROJ_NO: 02124	NSAMPLE	B185A1-SB1-0103			B185A1-SB1-0708			B185A1-SB2-0103			B185A1-SB2-0305		
SDG: WE19-6	LAB_ID	SD4692-1			SD4692-3			SD4692-5			SD4692-7		
FRACTION: OS	SAMP_DATE	7/28/2010			7/28/2010			7/28/2010			7/28/2010		
MEDIA: SOIL	QC_TYPE	NM			NM			NM			NM		
	UNITS	UG/KG			UG/KG			UG/KG			UG/KG		
	PCT_SOLIDS	88.0			92.8			86.4			84.8		
	DUP_OF												
PARAMETER		RESULT	VQL	QLCD	RESULT	VQL	QLCD	RESULT	VQL	QLCD	RESULT	VQL	QLCD
BIS(2-ETHYLHEXYL)PHTHALATE		280	U		260	U		280	U		290	U	
BUTYL BENZYL PHTHALATE		280	U		260	U		280	U		290	U	
CARBAZOLE		280	U		260	U		280	U		290	U	
DIBENZOFURAN		280	U		260	U		280	U		290	U	
DIETHYL PHTHALATE		280	U		260	U		280	U		290	U	
DIMETHYL PHTHALATE		280	U		260	U		280	U		290	U	
DI-N-BUTYL PHTHALATE		280	U		260	U		280	U		290	U	
DI-N-OCTYL PHTHALATE		280	U		260	U		280	U		290	U	
HEXACHLOROBENZENE		280	U		260	U		280	U		290	U	
HEXACHLOROBUTADIENE		280	U		260	U		280	U		290	U	
HEXACHLOROETHANE		280	U		260	U		280	U		290	U	
ISOPHORONE		280	U		260	U		280	U		290	U	
NITROBENZENE		280	U		260	U		280	U		290	U	
N-NITROSODIMETHYLAMINE		280	U		260	U		280	U		290	U	
N-NITROSO-DI-N-PROPYLAMINE		280	U		260	U		280	U		290	U	
N-NITROSODIPHENYLAMINE		280	U		260	U		280	U		290	U	
N-NITROSOPYRROLIDINE		280	U		260	U		280	U		290	U	
PENTACHLOROPHENOL		680	U		640	U		700	U		710	U	
PHENOL		280	U		260	U		280	U		290	U	

PROJ_NO: 02124 SDG: WE19-6 FRACTION: OS MEDIA: SOIL	NSAMPLE	B185A1-SB3-0103			B185A1-SB3-0305			B185A1-SB4-0103			B185A1-SB4-0507		
	LAB_ID	SD4692-9			SD4692-11			SD4692-13			SD4692-15		
	SAMP_DATE	7/28/2010			7/28/2010			7/28/2010			7/28/2010		
	QC_TYPE	NM			NM			NM			NM		
	UNITS	UG/KG			UG/KG			UG/KG			UG/KG		
	PCT_SOLIDS	86.1			82.2			83.1			76.1		
	DUP_OF												
PARAMETER		RESULT	VQL	QLCD	RESULT	VQL	QLCD	RESULT	VQL	QLCD	RESULT	VQL	QLCD
BIS(2-ETHYLHEXYL)PHTHALATE		280	U		290	U		290	U		320	U	
BUTYL BENZYL PHTHALATE		280	U		290	U		290	U		320	U	
CARBAZOLE		280	U		290	U		290	U		320	U	
DIBENZOFURAN		280	U		290	U		290	U		320	U	
DIETHYL PHTHALATE		280	U		290	U		290	U		320	U	
DIMETHYL PHTHALATE		280	U		290	U		290	U		320	U	
DI-N-BUTYL PHTHALATE		280	U		290	U		290	U		320	U	
DI-N-OCTYL PHTHALATE		280	U		290	U		290	U		320	U	
HEXACHLOROBENZENE		280	U		290	U		290	U		320	U	
HEXACHLOROBUTADIENE		280	U		290	U		290	U		320	U	
HEXACHLOROETHANE		280	U		290	U		290	U		320	U	
ISOPHORONE		280	U		290	U		290	U		320	U	
NITROBENZENE		280	U		290	U		290	U		320	U	
N-NITROSODIMETHYLAMINE		280	U		290	U		290	U		320	U	
N-NITROSO-DI-N-PROPYLAMINE		280	U		290	U		290	U		320	U	
N-NITROSODIPHENYLAMINE		280	U		290	U		290	U		320	U	
N-NITROSOPYRROLIDINE		280	U		290	U		290	U		320	U	
PENTACHLOROPHENOL		700	U		720	U		730	U		790	U	
PHENOL		280	U		290	U		290	U		320	U	

PROJ_NO: 02124 SDG: WE19-6 FRACTION: OS MEDIA: SOIL	NSAMPLE	B185A3-SB1-0103			B185A3-SB1-0305		
	LAB_ID	SD4692-17			SD4692-19		
	SAMP_DATE	7/28/2010			7/28/2010		
	QC_TYPE	NM			NM		
	UNITS	UG/KG			UG/KG		
	PCT_SOLIDS	86.9			86.8		
	DUP_OF						
PARAMETER		RESULT	VQL	QLCD	RESULT	VQL	QLCD
BIS(2-ETHYLHEXYL)PHTHALATE		280	U		270	U	
BUTYL BENZYL PHTHALATE		280	U		270	U	
CARBAZOLE		280	U		270	U	
DIBENZOFURAN		280	U		270	U	
DIETHYL PHTHALATE		280	U		270	U	
DIMETHYL PHTHALATE		280	U		270	U	
DI-N-BUTYL PHTHALATE		280	U		270	U	
DI-N-OCTYL PHTHALATE		280	U		270	U	
HEXACHLOROBENZENE		280	U		270	U	
HEXACHLOROBUTADIENE		280	U		270	U	
HEXACHLOROETHANE		280	U		270	U	
ISOPHORONE		280	U		270	U	
NITROBENZENE		280	U		270	U	
N-NITROSODIMETHYLAMINE		280	U		270	U	
N-NITROSO-DI-N-PROPYLAMINE		280	U		270	U	
N-NITROSODIPHENYLAMINE		280	U		270	U	
N-NITROSOPYRROLIDINE		280	U		270	U	
PENTACHLOROPHENOL		700	U		670	U	
PHENOL		280	U		270	U	

PROJ_NO: 02124	NSAMPLE	RB-DPT-072910
SDG: WE19-6	LAB_ID	SD4621-1
FRACTION: OS	SAMP_DATE	7/29/2010
MEDIA: WATER	QC_TYPE	NM
	UNITS	UG/L
	PCT_SOLIDS	0.0
	DUP_OF	

PARAMETER	RESULT	VQL	QLCD
1,1-BIPHENYL	7.1	U	
1,2,4-TRICHLOROBENZENE	7.1	U	
1,2-DICHLOROBENZENE	7.1	U	
1,2-DIPHENYLHYDRAZINE	14	U	
1,3-DICHLOROBENZENE	7.1	U	
1,4-DICHLOROBENZENE	7.1	U	
2,2'-OXYBIS(1-CHLOROPROPANE)	7.1	U	
2,4,5-TRICHLOROPHENOL	18	U	
2,4,6-TRICHLOROPHENOL	7.1	U	
2,4-DICHLOROPHENOL	7.1	U	
2,4-DIMETHYLPHENOL	7.1	U	
2,4-DINITROPHENOL	18	U	
2,4-DINITROTOLUENE	7.1	U	
2,6-DICHLOROPHENOL	7.1	U	
2,6-DINITROTOLUENE	7.1	U	
2-CHLORONAPHTHALENE	7.1	U	
2-CHLOROPHENOL	7.1	U	
2-METHYLPHENOL	7.1	U	
2-NITROANILINE	18	U	
2-NITROPHENOL	7.1	U	
3&4-METHYLPHENOL	7.1	U	
3,3'-DICHLOROBENZIDINE	18	U	
3-NITROANILINE	18	U	
4,6-DINITRO-2-METHYLPHENOL	18	U	
4-BROMOPHENYL PHENYL ETHER	7.1	U	
4-CHLORO-3-METHYLPHENOL	7.1	U	
4-CHLOROANILINE	7.1	U	
4-CHLOROPHENYL PHENYL ETHER	7.1	U	
4-NITROANILINE	18	U	
4-NITROPHENOL	18	U	
BENZIDINE	36	UJ	C
BENZOIC ACID	18	UJ	C
BENZYL ALCOHOL	14	U	
BIS(2-CHLOROETHOXY)METHANE	7.1	U	
BIS(2-CHLOROETHYL)ETHER	7.1	U	

PROJ_NO: 02124 SDG: WE19-6 FRACTION: OS MEDIA: WATER	NSAMPLE	RB-DPT-072910
	LAB_ID	SD4621-1
	SAMP_DATE	7/29/2010
	QC_TYPE	NM
	UNITS	UG/L
	PCT_SOLIDS	0.0
	DUP_OF	

PARAMETER	RESULT	VQL	QLCD
BIS(2-ETHYLHEXYL)PHTHALATE	7.1	UJ	C
BUTYL BENZYL PHTHALATE	7.1	U	
CARBAZOLE	7.1	U	
DIBENZOFURAN	7.1	U	
DIETHYL PHTHALATE	7.1	U	
DIMETHYL PHTHALATE	7.1	U	
DI-N-BUTYL PHTHALATE	7.1	U	
DI-N-OCTYL PHTHALATE	7.1	U	
HEXACHLOROBENZENE	7.1	U	
HEXACHLOROBUTADIENE	7.1	U	
HEXACHLOROETHANE	7.1	U	
ISOPHORONE	7.1	U	
NITROBENZENE	7.1	U	
N-NITROSODIMETHYLAMINE	7.1	U	
N-NITROSO-DI-N-PROPYLAMINE	7.1	U	
N-NITROSODIPHENYLAMINE	7.1	U	
N-NITROSOPYRROLIDINE	7.1	U	
PENTACHLOROPHENOL	18	U	
PHENOL	7.1	U	

PROJ_NO: 02124	NSAMPLE	RB-DPT-072910
SDG: WE19-6	LAB_ID	SD4621-1RA
FRACTION: PAH	SAMP_DATE	7/29/2010
MEDIA: WATER	QC_TYPE	NM
	UNITS	UG/L
	PCT_SOLIDS	0.0
	DUP_OF	

PARAMETER	RESULT	VQL	QLCD
2-METHYLNAPHTHALENE	0.095	UJ	E
ACENAPHTHENE	0.095	U	
ACENAPHTHYLENE	0.095	U	
ANTHRACENE	0.095	U	
BENZO(A)ANTHRACENE	0.095	U	
BENZO(A)PYRENE	0.095	U	
BENZO(B)FLUORANTHENE	0.095	U	
BENZO(G,H,I)PERYLENE	0.095	U	
BENZO(K)FLUORANTHENE	0.095	U	
CHRYSENE	0.095	U	
DIBENZO(A,H)ANTHRACENE	0.095	U	
FLUORANTHENE	0.095	UJ	E
FLUORENE	0.095	U	
INDENO(1,2,3-CD)PYRENE	0.095	U	
NAPHTHALENE	0.095	UJ	E
PHENANTHRENE	0.095	U	
PYRENE	0.095	U	

PROJ_NO: 02124 SDG: WE19-6 FRACTION: PAH MEDIA: SOIL	NSAMPLE	B185A1-SB1-0103			B185A1-SB1-0708			B185A1-SB2-0103			B185A1-SB2-0305		
	LAB_ID	SD4692-1			SD4692-3			SD4692-5			SD4692-7RA		
	SAMP_DATE	7/28/2010			7/28/2010			7/28/2010			7/28/2010		
	QC_TYPE	NM			NM			NM			NM		
	UNITS	UG/KG			UG/KG			UG/KG			UG/KG		
	PCT_SOLIDS	88.0			92.8			86.4			84.8		
	DUP_OF												
PARAMETER		RESULT	VQL	QLCD	RESULT	VQL	QLCD	RESULT	VQL	QLCD	RESULT	VQL	QLCD
2-METHYLNAPHTHALENE		4	J	PR	2.5	J	PR	6.3	J	PR	12	U	
ACENAPHTHENE		3.9	J	PR	2.2	J	PR	3	J	PR	12	U	
ACENAPHTHYLENE		11	U		10	U		11	U		12	U	
ANTHRACENE		6	J	PR	2.4	J	PR	9.8	J	PR	12	U	
BENZO(A)ANTHRACENE		25	J	R	6.7	J	PR	70	J	R	5.2	J	P
BENZO(A)PYRENE		26	J	R	4.9	J	PR	65	J	R	5.6	J	P
BENZO(B)FLUORANTHENE		37	J	R	9.5	U	A	84	J	R	9	U	A
BENZO(G,H,I)PERYLENE		18	J	PR	3.2	J	PR	40	J	R	3.4	J	P
BENZO(K)FLUORANTHENE		15	J	PR	3.4	J	PR	31	J	R	4	J	P
CHRYSENE		29	J	R	6.6	J	PR	65	J	R	6.7	J	P
DIBENZO(A,H)ANTHRACENE		11	U		10	U		14	J	PR	12	U	
FLUORANTHENE		49	J	R	19	J	PR	130	J	R	16	J	P
FLUORENE		5.5	J	PR	4.7	J	PR	11	U		12	U	
INDENO(1,2,3-CD)PYRENE		21	J	PR	7.9	J	PR	55	J	R	4.7	J	P
NAPHTHALENE		11	U		10	U		6.4	J	PR	12	U	
PHENANTHRENE		35	J	R	15	J	PR	39	J	R	12	U	
PYRENE		54	J	R	13	J	PR	100	J	R	10	J	P

PROJ_NO: 02124	NSAMPLE	B185A1-SB3-0103			B185A1-SB3-0305			B185A1-SB4-0103			B185A1-SB4-0103-DL		
SDG: WE19-6	LAB_ID	SD4692-9			SD4692-11RA			SD4692-13			SD4692-13DL		
FRACTION: PAH	SAMP_DATE	7/28/2010			7/28/2010			7/28/2010			7/28/2010		
MEDIA: SOIL	QC_TYPE	NM			NM			NM			NM		
	UNITS	UG/KG			UG/KG			UG/KG			UG/KG		
	PCT_SOLIDS	86.1			82.2			83.1			83.1		
	DUP_OF												
PARAMETER		RESULT	VQL	QLCD	RESULT	VQL	QLCD	RESULT	VQL	QLCD	RESULT	VQL	QLCD
2-METHYLNAPHTHALENE		11	U		12	U		5.2	J	PR			
ACENAPHTHENE		6.3	J	PR	12	J	P	30	J	R			
ACENAPHTHYLENE		11	U		12	U		2.8	J	PR			
ANTHRACENE		12	J	PR	12	J	P	39	J	R			
BENZO(A)ANTHRACENE		55	J	R	44			160	J	R			
BENZO(A)PYRENE		54	J	R	45			140	J	R			
BENZO(B)FLUORANTHENE		77	J	R	63			220	J	R			
BENZO(G,H,I)PERYLENE		41	J	R	30			92	J	R			
BENZO(K)FLUORANTHENE		32	J	R	22	J	P	65	J	R			
CHRYSENE		67	J	R	58			180	J	R			
DIBENZO(A,H)ANTHRACENE		11	J	PR	8.3	J	P	23	J	PR			
FLUORANTHENE		130	J	R	120						400		
FLUORENE		10	J	PR	18	J	P	44	J	R			
INDENO(1,2,3-CD)PYRENE		53	J	R	38			130	J	R			
NAPHTHALENE		11	U		12	U		4.3	J	PR			
PHENANTHRENE		120	J	R	130						510		
PYRENE		140	J	R	96						380		

PROJ_NO: 02124	NSAMPLE	B185A1-SB4-0507			B185A3-SB1-0103			B185A3-SB1-0305		
SDG: WE19-6	LAB_ID	SD4692-15			SD4692-17			SD4692-19		
FRACTION: PAH	SAMP_DATE	7/28/2010			7/28/2010			7/28/2010		
MEDIA: SOIL	QC_TYPE	NM			NM			NM		
	UNITS	UG/KG			UG/KG			UG/KG		
	PCT_SOLIDS	76.1			86.9			86.8		
	DUP_OF									
PARAMETER		RESULT	VQL	QLCD	RESULT	VQL	QLCD	RESULT	VQL	QLCD
2-METHYLNAPHTHALENE		13	U		11	U		11	U	
ACENAPHTHENE		5.4	J	PR	11	U		11	U	
ACENAPHTHYLENE		1.8	J	PR	2	J	PR	11	U	
ANTHRACENE		11	J	PR	11	U		11	U	
BENZO(A)ANTHRACENE		45	J	R	11	U		11	U	
BENZO(A)PYRENE		50	J	R	11	U		11	U	
BENZO(B)FLUORANTHENE		71	J	R	11	U		11	U	
BENZO(G,H,I)PERYLENE		39	J	R	11	U		11	U	
BENZO(K)FLUORANTHENE		20	J	PR	11	U		11	U	
CHRYSENE		51	J	R	11	U		11	U	
DIBENZO(A,H)ANTHRACENE		14	J	PR	11	U		11	U	
FLUORANTHENE		120	J	R	3.7	J	PR	11	U	
FLUORENE		5.2	J	PR	11	U		11	U	
INDENO(1,2,3-CD)PYRENE		52	J	R	11	U		11	U	
NAPHTHALENE		13	U		11	U		11	U	
PHENANTHRENE		72	J	R	2.8	J	PR	11	U	
PYRENE		100	J	R	5.1	J	PR	11	U	

PROJ_NO: 02124	NSAMPLE	RB-DPT-072910
SDG: WE19-6	LAB_ID	SD4621-1RE
FRACTION: PEST/PCB	SAMP_DATE	7/29/2010
MEDIA: WATER	QC_TYPE	NM
	UNITS	UG/L
	PCT_SOLIDS	0.0
	DUP_OF	

PARAMETER	RESULT	VQL	QLCD
4,4'-DDD	0.047	U	
4,4'-DDE	0.047	U	
4,4'-DDT	0.047	U	
ALDRIN	0.024	U	
ALPHA-BHC	0.024	U	
ALPHA-CHLORDANE	0.024	U	
AROCLOR-1016	0.24	U	
AROCLOR-1221	0.24	U	
AROCLOR-1232	0.24	U	
AROCLOR-1242	0.24	U	
AROCLOR-1248	0.24	U	
AROCLOR-1254	0.24	U	
AROCLOR-1260	0.24	U	
AROCLOR-1268	0.24	U	
BETA-BHC	0.024	U	
DELTA-BHC	0.024	U	
DIELDRIN	0.047	U	
ENDOSULFAN I	0.024	U	
ENDOSULFAN II	0.047	U	
ENDOSULFAN SULFATE	0.047	U	
ENDRIN	0.047	U	
ENDRIN ALDEHYDE	0.047	U	
ENDRIN KETONE	0.047	U	
GAMMA-BHC (LINDANE)	0.024	U	
GAMMA-CHLORDANE	0.024	U	
HEPTACHLOR	0.024	UJ	C
HEPTACHLOR EPOXIDE	0.024	U	
HEXACHLOROBENZENE	0.047	U	
METHOXYCHLOR	0.24	UJ	C
TOXAPHENE	0.47	U	

PROJ_NO: 02124	NSAMPLE	B185A1-SB1-0103			B185A1-SB1-0708			B185A1-SB2-0103			B185A1-SB2-0305		
SDG: WE19-6	LAB_ID	SD4692-1			SD4692-3			SD4692-5RE			SD4692-7		
FRACTION: PEST/PCB	SAMP_DATE	7/28/2010			7/28/2010			7/28/2010			7/28/2010		
MEDIA: SOIL	QC_TYPE	NM			NM			NM			NM		
	UNITS	UG/KG			UG/KG			UG/KG			UG/KG		
	PCT_SOLIDS	88.0			92.8			86.4			84.8		
	DUP_OF												

PARAMETER	RESULT	VQL	QLCD	RESULT	VQL	QLCD	RESULT	VQL	QLCD	RESULT	VQL	QLCD
4,4'-DDD	1.8	U		1.7	U		0.81	J	HPU	1.9	U	
4,4'-DDE	1.8	U		1.7	U		1.9	UJ	H	1.9	U	
4,4'-DDT	1.8	U		1.7	U		1.9	UJ	H	1.9	U	
ALDRIN	0.95	U		0.9	U		0.98	UJ	H	1	U	
ALPHA-BHC	0.95	U		0.9	U		0.98	UJ	H	1	U	
ALPHA-CHLORDANE	0.95	U		0.9	U		0.98	UJ	H	1	U	
AROCLOR-1016	9.5	U		9	U		9.8	UJ	H	10	U	
AROCLOR-1221	9.5	U		9	U		9.8	UJ	H	10	U	
AROCLOR-1232	11	U		10	U		12	UJ	H	12	U	
AROCLOR-1242	9.5	U		9	U		9.8	UJ	H	10	U	
AROCLOR-1248	9.5	U		9	U		9.8	UJ	H	10	U	
AROCLOR-1254	9.5	U		9	U		9.8	UJ	H	10	U	
AROCLOR-1260	9.5	U		9	U		9.8	UJ	H	10	U	
AROCLOR-1268	9.5	U		9	U		9.8	UJ	H	10	U	
BETA-BHC	0.95	U		0.9	U		0.98	UJ	H	1	U	
DELTA-BHC	0.95	U		0.9	U		0.98	UJ	H	1	U	
DIELDRIN	1.8	U		1.7	U		1.9	UJ	H	1.9	U	
ENDOSULFAN I	0.95	U		0.9	U		0.98	UJ	H	1	U	
ENDOSULFAN II	1.8	U		1.7	U		1.9	UJ	H	1.9	U	
ENDOSULFAN SULFATE	1.8	U		1.7	U		1.9	UJ	H	1.9	U	
ENDRIN	1.8	U		1.7	U		1.9	UJ	H	1.9	U	
ENDRIN ALDEHYDE	1.8	U		1.7	U		1.9	UJ	H	1.9	U	
ENDRIN KETONE	1.8	UJ	C	1.7	UJ	C	1.9	UJ	CH	1.9	UJ	C
GAMMA-BHC (LINDANE)	0.95	U		0.9	U		0.98	UJ	H	1	U	
GAMMA-CHLORDANE	0.95	U		0.35	J	P	0.98	UJ	H	1	U	
HEPTACHLOR	0.95	U		0.49	J	P	0.98	UJ	H	1	U	
HEPTACHLOR EPOXIDE	0.95	U		0.9	U		0.98	UJ	H	1	U	
HEXACHLOROBENZENE	1.8	U		1.7	U		1.9	UJ	H	1.9	U	
METHOXYCHLOR	9.5	U		9	U		9.8	UJ	H	10	U	
TOXAPHENE	18	U		17	U		18	UJ	H	19	U	

PROJ_NO: 02124	NSAMPLE	B185A1-SB3-0103			B185A1-SB3-0305			B185A1-SB4-0103			B185A1-SB4-0507		
SDG: WE19-6	LAB_ID	SD4692-9			SD4692-11			SD4692-13			SD4692-15		
FRACTION: PEST/PCB	SAMP_DATE	7/28/2010			7/28/2010			7/28/2010			7/28/2010		
MEDIA: SOIL	QC_TYPE	NM			NM			NM			NM		
	UNITS	UG/KG			UG/KG			UG/KG			UG/KG		
	PCT_SOLIDS	86.1			82.2			83.1			76.1		
	DUP_OF												
PARAMETER		RESULT	VQL	QLCD	RESULT	VQL	QLCD	RESULT	VQL	QLCD	RESULT	VQL	QLCD
4,4'-DDD		1	J	PU	2	U		1.9	U		2	U	
4,4'-DDE		1.9	U		2	U		0.43	J	PU	2	U	
4,4'-DDT		0.9	J	PU	0.68	J	CPU	1.9	U		2	U	
ALDRIN		0.99	U		1	U		1	U		1	U	
ALPHA-BHC		0.99	U		1	U		1	U		1	U	
ALPHA-CHLORDANE		0.99	U		1	U		1	U		1	U	
AROCLOR-1016		9.9	U		10	U		10	U		10	U	
AROCLOR-1221		9.9	U		10	U		10	U		10	U	
AROCLOR-1232		12	U		12	U		12	U		12	U	
AROCLOR-1242		9.9	U		10	U		10	U		10	U	
AROCLOR-1248		9.9	U		10	U		10	U		10	U	
AROCLOR-1254		9.9	U		10	U		10	U		10	U	
AROCLOR-1260		9.9	U		10	U		10	U		10	U	
AROCLOR-1268		9.9	U		10	U		10	U		10	U	
BETA-BHC		0.99	U		1	U		1	U		1	U	
DELTA-BHC		0.72	J	P	1	U		0.84	J	P	1	U	
DIELDRIN		1.9	U		2	U		1.9	U		2	U	
ENDOSULFAN I		0.99	U		1	U		1	U		1	J	U
ENDOSULFAN II		1.9	U		2	U		1.9	U		2	U	
ENDOSULFAN SULFATE		1.9	U		2	U		1.9	U		2	U	
ENDRIN		1.9	U		2	U		1.9	U		2	U	
ENDRIN ALDEHYDE		1.9	U		2	U		1.9	U		2	U	
ENDRIN KETONE		1.9	UJ	C	1.8	J	CPU	1.9	UJ	C	2	UJ	C
GAMMA-BHC (LINDANE)		0.99	U		1	U		1	U		1	U	
GAMMA-CHLORDANE		0.99	U		1	U		1	U		1	U	
HEPTACHLOR		0.99	U		1	U		1	U		1	U	
HEPTACHLOR EPOXIDE		0.99	U		1	U		1	U		1	U	
HEXACHLOROBENZENE		1.9	U		2	U		1.9	U		1.5	J	P
METHOXYCHLOR		9.9	U		10	U		10	U		10	U	
TOXAPHENE		18	U		19	U		19	U		20	U	

PROJ_NO: 02124	NSAMPLE	B185A3-SB1-0103			B185A3-SB1-0305		
SDG: WE19-6	LAB_ID	SD4692-17			SD4692-19		
FRACTION: PEST/PCB	SAMP_DATE	7/28/2010			7/28/2010		
MEDIA: SOIL	QC_TYPE	NM			NM		
	UNITS	UG/KG			UG/KG		
	PCT_SOLIDS	86.9			86.8		
	DUP_OF						
PARAMETER		RESULT	VQL	QLCD	RESULT	VQL	QLCD
4,4'-DDD		1.8	U		1.9	U	
4,4'-DDE		1.8	U		1.9	U	
4,4'-DDT		1.8	U		1.9	U	
ALDRIN		0.95	U		0.98	U	
ALPHA-BHC		0.95	U		0.98	U	
ALPHA-CHLORDANE		0.95	U		0.98	U	
AROCLOR-1016		9.4	UJ	H	9.8	U	
AROCLOR-1221		9.4	UJ	H	9.8	U	
AROCLOR-1232		11	UJ	H	11	U	
AROCLOR-1242		9.4	UJ	H	9.8	U	
AROCLOR-1248		9.4	UJ	H	9.8	U	
AROCLOR-1254		9.4	UJ	H	9.8	U	
AROCLOR-1260		9.4	UJ	H	9.8	U	
AROCLOR-1268		9.4	UJ	H	9.8	U	
BETA-BHC		0.95	U		0.98	U	
DELTA-BHC		0.95	U		0.98	U	
DIELDRIN		1.8	U		1.9	U	
ENDOSULFAN I		0.95	U		0.98	U	
ENDOSULFAN II		1.8	U		1.9	U	
ENDOSULFAN SULFATE		1.8	U		1.9	U	
ENDRIN		1.8	U		1.9	U	
ENDRIN ALDEHYDE		1.8	U		1.9	U	
ENDRIN KETONE		1.8	UJ	C	1.9	UJ	C
GAMMA-BHC (LINDANE)		0.95	U		0.98	U	
GAMMA-CHLORDANE		0.95	U		0.98	U	
HEPTACHLOR		0.95	U		0.98	U	
HEPTACHLOR EPOXIDE		0.95	U		0.98	U	
HEXACHLOROBENZENE		1.8	U		1.9	U	
METHOXYCHLOR		9.5	U		9.8	U	
TOXAPHENE		18	U		18	U	

APPENDIX B

RESULTS AS REPORTED BY THE LABORATORY

Katahdin
ANALYTICAL SERVICES

Cert No E87604

Report of Analytical Results

Client: Tetra Tech NUS, Inc.
Lab ID: SD4621-1
Client ID: RB-DPT-072910
Project: CTO WE19 NS Newport, Soi
SDG: WE19-6

Sample Date: 29-JUL-10
Received Date: 30-JUL-10
Extract Date: 11-AUG-10
Extracted By: DJP
Extraction Method:
Lab Prep Batch: WG80847

Analysis Date: 11-AUG-10
Analyst: DJP
Analysis Method: SW846 8260B
Matrix: AQ
% Solids: NA
Report Date: 20-AUG-10

Compound	Qualifier	Result	Units	Dilution	LOQ	ADJ LOQ	ADJ MDL	ADJ LOD
Dichlorodifluoromethane	U	1.0	ug/L	1	2	2.0	0.24	1.0
Chloromethane	U	1.0	ug/L	1	2	2.0	0.36	1.0
Vinyl Chloride	U	1.0	ug/L	1	2	2.0	0.25	1.0
Bromomethane	U	1.0	ug/L	1	2	2.0	0.49	1.0
Chloroethane	U	1.0	ug/L	1	2	2.0	0.55	1.0
Trichlorofluoromethane	U	1.0	ug/L	1	2	2.0	0.24	1.0
1,1-Dichloroethene	U	0.50	ug/L	1	1	1.0	0.35	0.50
Carbon Disulfide	U	0.50	ug/L	1	1	1.0	0.25	0.50
Methylene Chloride	U	2.5	ug/L	1	5	5.0	1.1	2.5
Acetone		32.	ug/L	1	5	5.0	2.2	2.5
trans-1,2-Dichloroethene	U	0.50	ug/L	1	1	1.0	0.25	0.50
Methyl tert-butyl Ether	U	0.50	ug/L	1	1	1.0	0.36	0.50
1,1-Dichloroethane	U	0.50	ug/L	1	1	1.0	0.21	0.50
cis-1,2-Dichloroethene	U	0.50	ug/L	1	1	1.0	0.21	0.50
2,2-Dichloropropane	U	0.50	ug/L	1	1	1.0	0.25	0.50
Bromochloromethane	U	0.50	ug/L	1	1	1.0	0.21	0.50
Chloroform	U	0.50	ug/L	1	1	1.0	0.32	0.50
Carbon Tetrachloride	U	0.50	ug/L	1	1	1.0	0.22	0.50
1,1,1-Trichloroethane	U	0.50	ug/L	1	1	1.0	0.20	0.50
1,1-Dichloropropene	U	0.50	ug/L	1	1	1.0	0.21	0.50
2-Butanone	J	3.3	ug/L	1	5	5.0	1.3	2.5
Benzene	U	0.50	ug/L	1	1	1.0	0.26	0.50
1,2-Dichloroethane	U	0.50	ug/L	1	1	1.0	0.20	0.50
Trichloroethene	U	0.50	ug/L	1	1	1.0	0.28	0.50
Dibromomethane	U	0.50	ug/L	1	1	1.0	0.46	0.50
1,2-Dichloropropane	U	0.50	ug/L	1	1	1.0	0.25	0.50
Bromodichloromethane	U	0.50	ug/L	1	1	1.0	0.33	0.50
cis-1,3-Dichloropropene	U	0.50	ug/L	1	1	1.0	0.19	0.50
Toluene	U	0.50	ug/L	1	1	1.0	0.27	0.50
4-Methyl-2-Pentanone	U	2.5	ug/L	1	5	5.0	1.3	2.5
Tetrachloroethene	U	0.50	ug/L	1	1	1.0	0.40	0.50
trans-1,3-Dichloropropene	U	0.50	ug/L	1	1	1.0	0.20	0.50
1,1,2-Trichloroethane	U	0.50	ug/L	1	1	1.0	0.33	0.50
Dibromochloromethane	U	0.50	ug/L	1	1	1.0	0.30	0.50
1,3-Dichloropropane	U	0.50	ug/L	1	1	1.0	0.22	0.50

600 Technology Way
P.O. Box 540, Scarborough, ME 04070
Tel:(207) 874-2400 Fax:(207) 775-4029

Katahdin
ANALYTICAL SERVICES

Accredited in accordance with the NELAC
Cert No E87604

Report of Analytical Results

Client: Tetra Tech NUS, Inc.
Lab ID: SD4621-1
Client ID: RB-DPT-072910
Project: CTO WE19 NS Newport, Soi
SDG: WE19-6

Sample Date: 29-JUL-10
Received Date: 30-JUL-10
Extract Date: 11-AUG-10
Extracted By: DJP
Extraction Method:
Lab Prep Batch: WG80847

Analysis Date: 11-AUG-10
Analyst: DJP
Analysis Method: SW846 8260B
Matrix: AQ
% Solids: NA
Report Date: 20-AUG-10

Compound	Qualifier	Result	Units	Dilution	LOQ	ADJ LOQ	ADJ MDL	ADJ LOD
1,2-Dibromoethane	U	0.50	ug/L	1	1	1.0	0.22	0.50
2-Hexanone	U	2.5	ug/L	1	5	5.0	1.7	2.5
Chlorobenzene	U	0.50	ug/L	1	1	1.0	0.22	0.50
Ethylbenzene	U	0.50	ug/L	1	1	1.0	0.21	0.50
1,1,1,2-Tetrachloroethane	U	0.50	ug/L	1	1	1.0	0.19	0.50
m+p-Xylenes	U	1.0	ug/L	1	2	2.0	0.59	1.0
o-Xylene	U	0.50	ug/L	1	1	1.0	0.25	0.50
Styrene	U	0.50	ug/L	1	1	1.0	0.23	0.50
Bromoform	U	0.50	ug/L	1	1	1.0	0.23	0.50
Isopropylbenzene	U	0.50	ug/L	1	1	1.0	0.23	0.50
Bromobenzene	U	0.50	ug/L	1	1	1.0	0.24	0.50
N-Propylbenzene	U	0.50	ug/L	1	1	1.0	0.26	0.50
1,1,2,2-Tetrachloroethane	U	0.50	ug/L	1	1	1.0	0.38	0.50
1,3,5-Trimethylbenzene	U	0.50	ug/L	1	1	1.0	0.20	0.50
2-Chlorotoluene	U	0.50	ug/L	1	1	1.0	0.20	0.50
1,2,3-Trichloropropane	U	0.50	ug/L	1	1	1.0	0.19	0.50
4-Chlorotoluene	U	0.50	ug/L	1	1	1.0	0.26	0.50
tert-Butylbenzene	U	0.50	ug/L	1	1	1.0	0.31	0.50
1,2,4-Trimethylbenzene	U	0.50	ug/L	1	1	1.0	0.19	0.50
P-Isopropyltoluene	U	0.50	ug/L	1	1	1.0	0.25	0.50
1,3-Dichlorobenzene	U	0.50	ug/L	1	1	1.0	0.26	0.50
1,4-Dichlorobenzene	U	0.50	ug/L	1	1	1.0	0.24	0.50
N-Butylbenzene	U	0.50	ug/L	1	1	1.0	0.23	0.50
sec-Butylbenzene	U	0.50	ug/L	1	1	1.0	0.21	0.50
1,2-Dichlorobenzene	U	0.50	ug/L	1	1	1.0	0.15	0.50
1,2-Dibromo-3-Chloropropane	U	0.75	ug/L	1	1	1.0	0.50	0.75
Hexachlorobutadiene	U	0.50	ug/L	1	1	1.0	0.52	0.50
1,2,4-Trichlorobenzene	U	0.50	ug/L	1	1	1.0	0.37	0.50
1,2,3-Trichlorobenzene	U	0.50	ug/L	1	1	1.0	0.20	0.50
P-Bromofluorobenzene		78.6	%					
Toluene-d8		96.8	%					
1,2-Dichloroethane-d4		97.6	%					
Dibromofluoromethane		102.	%					

600 Technology Way
P.O. Box 540, Scarborough, ME 04070
Tel:(207) 874-2400 Fax:(207) 775-4029

http://www.katahdinlab.com

Katahdin
ANALYTICAL SERVICES

Cert No E87604

Report of Analytical Results

Client: Tetra Tech NUS, Inc.
Lab ID: SD4692-2
Client ID: B185A1-SB1-0103
Project: CTO WE19 NS Newport, Soi
SDG: WE19-6

Sample Date: 28-JUL-10
Received Date: 03-AUG-10
Extract Date: 04-AUG-10
Extracted By: DJP
Extraction Method:
Lab Prep Batch: WG80598

Analysis Date: 04-AUG-10
Analyst: DJP
Analysis Method: SW846 8260B
Matrix: SL
% Solids: 95.
Report Date: 20-AUG-10

Compound	Qualifier	Result	Units	Dilution	LOQ	ADJ LOQ	ADJ MDL	ADJ LOD
Dichlorodifluoromethane	U	4.2	ug/Kgdrywt	1	10	8.4	0.77	4.2
Chloromethane	U	4.2	ug/Kgdrywt	1	10	8.4	1.2	4.2
Vinyl Chloride	U	4.2	ug/Kgdrywt	1	10	8.4	0.73	4.2
Bromomethane	U	4.2	ug/Kgdrywt	1	10	8.4	0.92	4.2
Chloroethane	U	4.2	ug/Kgdrywt	1	10	8.4	1.1	4.2
Trichlorofluoromethane	U	4.2	ug/Kgdrywt	1	10	8.4	0.76	4.2
1,1-Dichloroethene	U	2.1	ug/Kgdrywt	1	5	4.2	0.78	2.1
Carbon Disulfide	U	2.1	ug/Kgdrywt	1	5	4.2	0.66	2.1
Methylene Chloride	U	10.	ug/Kgdrywt	1	25	21.	6.6	10.
Acetone		40.	ug/Kgdrywt	1	25	21.	4.3	10.
trans-1,2-Dichloroethene	U	2.1	ug/Kgdrywt	1	5	4.2	0.60	2.1
Methyl tert-butyl Ether	U	2.1	ug/Kgdrywt	1	5	4.2	0.92	2.1
1,1-Dichloroethane	U	2.1	ug/Kgdrywt	1	5	4.2	1.4	2.1
cis-1,2-Dichloroethene	U	2.1	ug/Kgdrywt	1	5	4.2	0.76	2.1
2,2-Dichloropropane	U	2.1	ug/Kgdrywt	1	5	4.2	0.42	2.1
Bromochloromethane	U	2.1	ug/Kgdrywt	1	5	4.2	0.76	2.1
Chloroform	U	2.1	ug/Kgdrywt	1	5	4.2	0.29	2.1
Carbon Tetrachloride	U	2.1	ug/Kgdrywt	1	5	4.2	1.1	2.1
1,1,1-Trichloroethane	U	2.1	ug/Kgdrywt	1	5	4.2	0.35	2.1
1,1-Dichloropropene	U	2.1	ug/Kgdrywt	1	5	4.2	0.76	2.1
2-Butanone	U	10.	ug/Kgdrywt	1	25	21.	5.0	10.
Benzene	U	2.1	ug/Kgdrywt	1	5	4.2	0.77	2.1
1,2-Dichloroethane	U	2.1	ug/Kgdrywt	1	5	4.2	0.84	2.1
Trichloroethene	U	2.1	ug/Kgdrywt	1	5	4.2	0.50	2.1
Dibromomethane	U	2.1	ug/Kgdrywt	1	5	4.2	0.43	2.1
1,2-Dichloropropane	U	2.1	ug/Kgdrywt	1	5	4.2	1.2	2.1
Bromodichloromethane	U	2.1	ug/Kgdrywt	1	5	4.2	0.50	2.1
cis-1,3-Dichloropropene	U	2.1	ug/Kgdrywt	1	5	4.2	0.60	2.1
Toluene	U	2.1	ug/Kgdrywt	1	5	4.2	1.2	2.1
4-Methyl-2-Pentanone	U	10.	ug/Kgdrywt	1	25	21.	5.0	10.
Tetrachloroethene	U	2.1	ug/Kgdrywt	1	5	4.2	1.0	2.1
trans-1,3-Dichloropropene	U	2.1	ug/Kgdrywt	1	5	4.2	0.72	2.1
1,1,2-Trichloroethane	U	2.1	ug/Kgdrywt	1	5	4.2	0.81	2.1
Dibromochloromethane	U	2.1	ug/Kgdrywt	1	5	4.2	0.84	2.1
1,3-Dichloropropane	U	2.1	ug/Kgdrywt	1	5	4.2	0.79	2.1

600 Technology Way
P.O. Box 540, Scarborough, ME 04070
Tel:(207) 874-2400 Fax:(207) 775-4029

Report of Analytical Results

Client: Tetra Tech NUS, Inc.
Lab ID: SD4692-2
Client ID: B185A1-SB1-0103
Project: CTO WE19 NS Newport, Soil
SDG: WE19-6

Sample Date: 28-JUL-10
Received Date: 03-AUG-10
Extract Date: 04-AUG-10
Extracted By: DJP
Extraction Method:
Lab Prep Batch: WG80598

Analysis Date: 04-AUG-10
Analyst: DJP
Analysis Method: SW846 8260B
Matrix: SL
% Solids: 95.
Report Date: 20-AUG-10

Compound	Qualifier	Result	Units	Dilution	LOQ	ADJ LOQ	ADJ MDL	ADJ LOD
1,2-Dibromoethane	U	2.1	ug/Kgdrywt	1	5	4.2	1.0	2.1
2-Hexanone	U	10.	ug/Kgdrywt	1	25	21.	4.0	10.
Chlorobenzene	U	2.1	ug/Kgdrywt	1	5	4.2	0.43	2.1
Ethylbenzene	U	2.1	ug/Kgdrywt	1	5	4.2	0.55	2.1
1,1,1,2-Tetrachloroethane	U	2.1	ug/Kgdrywt	1	5	4.2	0.59	2.1
m+p-Xylenes	U	4.2	ug/Kgdrywt	1	10	8.4	1.4	4.2
o-Xylene	U	2.1	ug/Kgdrywt	1	5	4.2	1.1	2.1
Styrene	U	2.1	ug/Kgdrywt	1	5	4.2	0.43	2.1
Bromoform	U	2.1	ug/Kgdrywt	1	5	4.2	0.59	2.1
Isopropylbenzene	U	2.1	ug/Kgdrywt	1	5	4.2	0.77	2.1
Bromobenzene	U	2.1	ug/Kgdrywt	1	5	4.2	0.62	2.1
N-Propylbenzene	U	2.1	ug/Kgdrywt	1	5	4.2	0.70	2.1
1,1,2,2-Tetrachloroethane	U	2.1	ug/Kgdrywt	1	5	4.2	0.70	2.1
1,3,5-Trimethylbenzene	U	2.1	ug/Kgdrywt	1	5	4.2	0.56	2.1
2-Chlorotoluene	U	2.1	ug/Kgdrywt	1	5	4.2	0.92	2.1
1,2,3-Trichloropropane	U	2.1	ug/Kgdrywt	1	5	4.2	1.0	2.1
4-Chlorotoluene	U	2.1	ug/Kgdrywt	1	5	4.2	0.41	2.1
tert-Butylbenzene	U	2.1	ug/Kgdrywt	1	5	4.2	0.76	2.1
1,2,4-Trimethylbenzene	U	2.1	ug/Kgdrywt	1	5	4.2	0.73	2.1
P-Isopropyltoluene	U	2.1	ug/Kgdrywt	1	5	4.2	0.64	2.1
1,3-Dichlorobenzene	U	2.1	ug/Kgdrywt	1	5	4.2	0.52	2.1
1,4-Dichlorobenzene	U	2.1	ug/Kgdrywt	1	5	4.2	0.37	2.1
N-Butylbenzene	U	2.1	ug/Kgdrywt	1	5	4.2	0.77	2.1
sec-Butylbenzene	U	2.1	ug/Kgdrywt	1	5	4.2	0.76	2.1
1,2-Dichlorobenzene	U	2.1	ug/Kgdrywt	1	5	4.2	0.66	2.1
1,2-Dibromo-3-Chloropropane	U	2.1	ug/Kgdrywt	1	5	4.2	1.3	2.1
Hexachlorobutadiene	U	2.1	ug/Kgdrywt	1	5	4.2	0.62	2.1
1,2,4-Trichlorobenzene	U	2.1	ug/Kgdrywt	1	5	4.2	0.66	2.1
1,2,3-Trichlorobenzene	U	2.1	ug/Kgdrywt	1	5	4.2	0.64	2.1
p-Bromofluorobenzene		86.8	%					
Toluene-D8		92.7	%					
1,2-Dichloroethane-D4		113.	%					
Dibromofluoromethane		101.	%					

600 Technology Way
P.O. Box 540, Scarborough, ME 04070
Tel:(207) 874-2400 Fax:(207) 775-4029

http://www.katahdinlab.com

Report of Analytical Results

Client: Tetra Tech NUS, Inc.
Lab ID: SD4692-4
Client ID: B185A1-SB1-0708
Project: CTO WE19 NS Newport, Soi
SDG: WE19-6

Sample Date: 28-JUL-10
Received Date: 03-AUG-10
Extract Date: 04-AUG-10
Extracted By: DJP
Extraction Method:
Lab Prep Batch: WG80598

Analysis Date: 04-AUG-10
Analyst: DJP
Analysis Method: SW846 8260B
Matrix: SL
% Solids: 92.
Report Date: 20-AUG-10

Compound	Qualifier	Result	Units	Dilution	LOQ	ADJ LOQ	ADJ MDL	ADJ LOD
Dichlorodifluoromethane	U	4.2	ug/Kgdrywt	1	10	8.4	0.77	4.2
Chloromethane	U	4.2	ug/Kgdrywt	1	10	8.4	1.2	4.2
Vinyl Chloride	U	4.2	ug/Kgdrywt	1	10	8.4	0.73	4.2
Bromomethane	U	4.2	ug/Kgdrywt	1	10	8.4	0.92	4.2
Chloroethane	U	4.2	ug/Kgdrywt	1	10	8.4	1.1	4.2
Trichlorofluoromethane	U	4.2	ug/Kgdrywt	1	10	8.4	0.76	4.2
1,1-Dichloroethene	U	2.1	ug/Kgdrywt	1	5	4.2	0.78	2.1
Carbon Disulfide	U	2.1	ug/Kgdrywt	1	5	4.2	0.66	2.1
Methylene Chloride	U	10.	ug/Kgdrywt	1	25	21.	6.6	10.
Acetone		23.	ug/Kgdrywt	1	25	21.	4.3	10.
trans-1,2-Dichloroethene	U	2.1	ug/Kgdrywt	1	5	4.2	0.60	2.1
Methyl tert-butyl Ether	U	2.1	ug/Kgdrywt	1	5	4.2	0.92	2.1
1,1-Dichloroethane	U	2.1	ug/Kgdrywt	1	5	4.2	1.4	2.1
cis-1,2-Dichloroethene	U	2.1	ug/Kgdrywt	1	5	4.2	0.76	2.1
2,2-Dichloropropane	U	2.1	ug/Kgdrywt	1	5	4.2	0.42	2.1
Bromochloromethane	U	2.1	ug/Kgdrywt	1	5	4.2	0.76	2.1
Chloroform	U	2.1	ug/Kgdrywt	1	5	4.2	0.29	2.1
Carbon Tetrachloride	U	2.1	ug/Kgdrywt	1	5	4.2	1.1	2.1
1,1,1-Trichloroethane	U	2.1	ug/Kgdrywt	1	5	4.2	0.35	2.1
1,1-Dichloropropene	U	2.1	ug/Kgdrywt	1	5	4.2	0.76	2.1
2-Butanone	U	10.	ug/Kgdrywt	1	25	21.	5.0	10.
Benzene	U	2.1	ug/Kgdrywt	1	5	4.2	0.77	2.1
1,2-Dichloroethane	U	2.1	ug/Kgdrywt	1	5	4.2	0.84	2.1
Trichloroethene	U	2.1	ug/Kgdrywt	1	5	4.2	0.50	2.1
Dibromomethane	U	2.1	ug/Kgdrywt	1	5	4.2	0.43	2.1
1,2-Dichloropropane	U	2.1	ug/Kgdrywt	1	5	4.2	1.2	2.1
Bromodichloromethane	U	2.1	ug/Kgdrywt	1	5	4.2	0.50	2.1
cis-1,3-Dichloropropene	U	2.1	ug/Kgdrywt	1	5	4.2	0.60	2.1
Toluene	U	2.1	ug/Kgdrywt	1	5	4.2	1.2	2.1
4-Methyl-2-Pentanone	U	10.	ug/Kgdrywt	1	25	21.	5.0	10.
Tetrachloroethene	U	2.1	ug/Kgdrywt	1	5	4.2	1.0	2.1
trans-1,3-Dichloropropene	U	2.1	ug/Kgdrywt	1	5	4.2	0.72	2.1
1,1,2-Trichloroethane	U	2.1	ug/Kgdrywt	1	5	4.2	0.81	2.1
Dibromochloromethane	U	2.1	ug/Kgdrywt	1	5	4.2	0.84	2.1
1,3-Dichloropropane	U	2.1	ug/Kgdrywt	1	5	4.2	0.79	2.1

600 Technology Way
P.O. Box 540, Scarborough, ME 04070
Tel:(207) 874-2400 Fax:(207) 775-4029

http://www.katahdinlab.com

Report of Analytical Results

Client: Tetra Tech NUS, Inc.
Lab ID: SD4692-4
Client ID: B185A1-SB1-0708
Project: CTO WE19 NS Newport, Soil
SDG: WE19-6

Sample Date: 28-JUL-10
Received Date: 03-AUG-10
Extract Date: 04-AUG-10
Extracted By: DJP
Extraction Method:
Lab Prep Batch: WG80598

Analysis Date: 04-AUG-10
Analyst: DJP
Analysis Method: SW846 8260B
Matrix: SL
% Solids: 92.
Report Date: 20-AUG-10

Compound	Qualifier	Result	Units	Dilution	LOQ	ADJ LOQ	ADJ MDL	ADJ LOD
1,2-Dibromoethane	U	2.1	ug/Kgdrywt	1	5	4.2	1.0	2.1
2-Hexanone	U	10.	ug/Kgdrywt	1	25	21.	4.0	10.
Chlorobenzene	U	2.1	ug/Kgdrywt	1	5	4.2	0.43	2.1
Ethylbenzene	U	2.1	ug/Kgdrywt	1	5	4.2	0.55	2.1
1,1,1,2-Tetrachloroethane	U	2.1	ug/Kgdrywt	1	5	4.2	0.59	2.1
m+p-Xylenes	U	4.2	ug/Kgdrywt	1	10	8.4	1.4	4.2
o-Xylene	U	2.1	ug/Kgdrywt	1	5	4.2	1.1	2.1
Styrene	U	2.1	ug/Kgdrywt	1	5	4.2	0.43	2.1
Bromoform	U	2.1	ug/Kgdrywt	1	5	4.2	0.59	2.1
Isopropylbenzene	J	1.6	ug/Kgdrywt	1	5	4.2	0.77	2.1
Bromobenzene	U	2.1	ug/Kgdrywt	1	5	4.2	0.62	2.1
N-Propylbenzene	J	2.2	ug/Kgdrywt	1	5	4.2	0.70	2.1
1,1,2,2-Tetrachloroethane	U	2.1	ug/Kgdrywt	1	5	4.2	0.70	2.1
1,3,5-Trimethylbenzene	U	2.1	ug/Kgdrywt	1	5	4.2	0.56	2.1
2-Chlorotoluene	U	2.1	ug/Kgdrywt	1	5	4.2	0.92	2.1
1,2,3-Trichloropropane	U	2.1	ug/Kgdrywt	1	5	4.2	1.0	2.1
4-Chlorotoluene	U	2.1	ug/Kgdrywt	1	5	4.2	0.41	2.1
tert-Butylbenzene	U	2.1	ug/Kgdrywt	1	5	4.2	0.76	2.1
1,2,4-Trimethylbenzene	J	1.1	ug/Kgdrywt	1	5	4.2	0.73	2.1
P-Isopropyltoluene	U	2.1	ug/Kgdrywt	1	5	4.2	0.64	2.1
1,3-Dichlorobenzene	U	2.1	ug/Kgdrywt	1	5	4.2	0.52	2.1
1,4-Dichlorobenzene	U	2.1	ug/Kgdrywt	1	5	4.2	0.37	2.1
N-Butylbenzene	J	3.3	ug/Kgdrywt	1	5	4.2	0.77	2.1
sec-Butylbenzene		6.7	ug/Kgdrywt	1	5	4.2	0.76	2.1
1,2-Dichlorobenzene	U	2.1	ug/Kgdrywt	1	5	4.2	0.66	2.1
1,2-Dibromo-3-Chloropropane	U	2.1	ug/Kgdrywt	1	5	4.2	1.3	2.1
Hexachlorobutadiene	U	2.1	ug/Kgdrywt	1	5	4.2	0.62	2.1
1,2,4-Trichlorobenzene	U	2.1	ug/Kgdrywt	1	5	4.2	0.66	2.1
1,2,3-Trichlorobenzene	U	2.1	ug/Kgdrywt	1	5	4.2	0.64	2.1
p-Bromofluorobenzene		101.	%					
Toluene-D8		94.3	%					
1,2-Dichloroethane-D4		119.	%					
Dibromofluoromethane		103.	%					

600 Technology Way
P.O. Box 540, Scarborough, ME 04070
Tel:(207) 874-2400 Fax:(207) 775-4029

http://www.katahdinlab.com

Katahdin
ANALYTICAL SERVICES

Cert No E87604

Report of Analytical Results

Client: Tetra Tech NUS, Inc.
Lab ID: SD4692-6
Client ID: B185A1-SB2-0103
Project: CTO WE19 NS Newport, Soi
SDG: WE19-6

Sample Date: 28-JUL-10
Received Date: 03-AUG-10
Extract Date: 04-AUG-10
Extracted By: DJP
Extraction Method:
Lab Prep Batch: WG80598

Analysis Date: 04-AUG-10
Analyst: DJP
Analysis Method: SW846 8260B
Matrix: SL
% Solids: 87.
Report Date: 20-AUG-10

Compound	Qualifier	Result	Units	Dilution	LOQ	ADJ LOQ	ADJ MDL	ADJ LOD
Dichlorodifluoromethane	U	4.9	ug/Kgdrywt	1	10	9.8	0.90	4.9
Chloromethane	U	4.9	ug/Kgdrywt	1	10	9.8	1.4	4.9
Vinyl Chloride	J	2.8	ug/Kgdrywt	1	10	9.8	0.85	4.9
Bromomethane	U	4.9	ug/Kgdrywt	1	10	9.8	1.1	4.9
Chloroethane	U	4.9	ug/Kgdrywt	1	10	9.8	1.3	4.9
Trichlorofluoromethane	U	4.9	ug/Kgdrywt	1	10	9.8	0.89	4.9
1,1-Dichloroethene	U	2.4	ug/Kgdrywt	1	5	4.9	0.91	2.4
Carbon Disulfide	U	2.4	ug/Kgdrywt	1	5	4.9	0.76	2.4
Methylene Chloride	U	12.	ug/Kgdrywt	1	25	24.	7.7	12.
Acetone		43.	ug/Kgdrywt	1	25	24.	5.0	12.
trans-1,2-Dichloroethene		9.3	ug/Kgdrywt	1	5	4.9	0.70	2.4
Methyl tert-butyl Ether	U	2.4	ug/Kgdrywt	1	5	4.9	1.1	2.4
1,1-Dichloroethane	U	2.4	ug/Kgdrywt	1	5	4.9	1.7	2.4
cis-1,2-Dichloroethene		6.4	ug/Kgdrywt	1	5	4.9	0.89	2.4
2,2-Dichloropropane	U	2.4	ug/Kgdrywt	1	5	4.9	0.49	2.4
Bromochloromethane	U	2.4	ug/Kgdrywt	1	5	4.9	0.89	2.4
Chloroform	U	2.4	ug/Kgdrywt	1	5	4.9	0.34	2.4
Carbon Tetrachloride	U	2.4	ug/Kgdrywt	1	5	4.9	1.3	2.4
1,1,1-Trichloroethane	U	2.4	ug/Kgdrywt	1	5	4.9	0.41	2.4
1,1-Dichloropropene	U	2.4	ug/Kgdrywt	1	5	4.9	0.89	2.4
2-Butanone	U	12.	ug/Kgdrywt	1	25	24.	5.8	12.
Benzene	U	2.4	ug/Kgdrywt	1	5	4.9	0.90	2.4
1,2-Dichloroethane	U	2.4	ug/Kgdrywt	1	5	4.9	0.98	2.4
Trichloroethene		7.3	ug/Kgdrywt	1	5	4.9	0.58	2.4
Dibromomethane	U	2.4	ug/Kgdrywt	1	5	4.9	0.50	2.4
1,2-Dichloropropane	U	2.4	ug/Kgdrywt	1	5	4.9	1.4	2.4
Bromodichloromethane	U	2.4	ug/Kgdrywt	1	5	4.9	0.59	2.4
cis-1,3-Dichloropropene	U	2.4	ug/Kgdrywt	1	5	4.9	0.70	2.4
Toluene	U	2.4	ug/Kgdrywt	1	5	4.9	1.4	2.4
4-Methyl-2-Pentanone	U	12.	ug/Kgdrywt	1	25	24.	5.8	12.
Tetrachloroethene	U	2.4	ug/Kgdrywt	1	5	4.9	1.2	2.4
trans-1,3-Dichloropropene	U	2.4	ug/Kgdrywt	1	5	4.9	0.84	2.4
1,1,2-Trichloroethane	U	2.4	ug/Kgdrywt	1	5	4.9	0.95	2.4
Dibromochloromethane	U	2.4	ug/Kgdrywt	1	5	4.9	0.98	2.4
1,3-Dichloropropane	U	2.4	ug/Kgdrywt	1	5	4.9	0.92	2.4

600 Technology Way
P.O. Box 540, Scarborough, ME 04070
Tel:(207) 874-2400 Fax:(207) 775-4029

Report of Analytical Results

Client: Tetra Tech NUS, Inc.
Lab ID: SD4692-6
Client ID: B185A1-SB2-0103
Project: CTO WE19 NS Newport, Soi
SDG: WE19-6

Sample Date: 28-JUL-10
Received Date: 03-AUG-10
Extract Date: 04-AUG-10
Extracted By: DJP
Extraction Method:
Lab Prep Batch: WG80598

Analysis Date: 04-AUG-10
Analyst: DJP
Analysis Method: SW846 8260B
Matrix: SL
% Solids: 87.
Report Date: 20-AUG-10

Compound	Qualifier	Result	Units	Dilution	LOQ	ADJ LOQ	ADJ MDL	ADJ LOD
1,2-Dibromoethane	U	2.4	ug/Kgdrywt	1	5	4.9	1.2	2.4
2-Hexanone	U	12.	ug/Kgdrywt	1	25	24.	4.7	12.
Chlorobenzene	U	2.4	ug/Kgdrywt	1	5	4.9	0.50	2.4
Ethylbenzene	U	2.4	ug/Kgdrywt	1	5	4.9	0.64	2.4
1,1,1,2-Tetrachloroethane	U	2.4	ug/Kgdrywt	1	5	4.9	0.69	2.4
m+p-Xylenes	U	4.9	ug/Kgdrywt	1	10	9.8	1.7	4.9
o-Xylene	U	2.4	ug/Kgdrywt	1	5	4.9	1.3	2.4
Styrene	U	2.4	ug/Kgdrywt	1	5	4.9	0.50	2.4
Bromoform	U	2.4	ug/Kgdrywt	1	5	4.9	0.69	2.4
Isopropylbenzene	U	2.4	ug/Kgdrywt	1	5	4.9	0.90	2.4
Bromobenzene	U	2.4	ug/Kgdrywt	1	5	4.9	0.72	2.4
N-Propylbenzene	U	2.4	ug/Kgdrywt	1	5	4.9	0.81	2.4
1,1,2,2-Tetrachloroethane	U	2.4	ug/Kgdrywt	1	5	4.9	0.82	2.4
1,3,5-Trimethylbenzene	U	2.4	ug/Kgdrywt	1	5	4.9	0.66	2.4
2-Chlorotoluene	U	2.4	ug/Kgdrywt	1	5	4.9	1.1	2.4
1,2,3-Trichloropropane	U	2.4	ug/Kgdrywt	1	5	4.9	1.2	2.4
4-Chlorotoluene	U	2.4	ug/Kgdrywt	1	5	4.9	0.48	2.4
tert-Butylbenzene	U	2.4	ug/Kgdrywt	1	5	4.9	0.88	2.4
1,2,4-Trimethylbenzene	U	2.4	ug/Kgdrywt	1	5	4.9	0.85	2.4
P-Isopropyltoluene	U	2.4	ug/Kgdrywt	1	5	4.9	0.74	2.4
1,3-Dichlorobenzene	U	2.4	ug/Kgdrywt	1	5	4.9	0.61	2.4
1,4-Dichlorobenzene	U	2.4	ug/Kgdrywt	1	5	4.9	0.43	2.4
N-Butylbenzene	U	2.4	ug/Kgdrywt	1	5	4.9	0.90	2.4
sec-Butylbenzene	U	2.4	ug/Kgdrywt	1	5	4.9	0.89	2.4
1,2-Dichlorobenzene	U	2.4	ug/Kgdrywt	1	5	4.9	0.76	2.4
1,2-Dibromo-3-Chloropropane	U	2.4	ug/Kgdrywt	1	5	4.9	1.5	2.4
Hexachlorobutadiene	U	2.4	ug/Kgdrywt	1	5	4.9	0.72	2.4
1,2,4-Trichlorobenzene	U	2.4	ug/Kgdrywt	1	5	4.9	0.77	2.4
1,2,3-Trichlorobenzene	U	2.4	ug/Kgdrywt	1	5	4.9	0.74	2.4
p-Bromofluorobenzene		81.9	%					
Toluene-D8		94.3	%					
1,2-Dichloroethane-D4		114.	%					
Dibromofluoromethane		105.	%					

600 Technology Way
P.O. Box 540, Scarborough, ME 04070
Tel:(207) 874-2400 Fax:(207) 775-4029

http://www.katahdinlab.com

Katahdin
ANALYTICAL SERVICES

Cert No E87604

Report of Analytical Results

Client: Tetra Tech NUS, Inc.
Lab ID: SD4692-8
Client ID: B185A1-SB2-0305
Project: CTO WE19 NS Newport, Soi
SDG: WE19-6

Sample Date: 28-JUL-10
Received Date: 03-AUG-10
Extract Date: 05-AUG-10
Extracted By: DJP
Extraction Method:
Lab Prep Batch: WG80600

Analysis Date: 05-AUG-10
Analyst: DJP
Analysis Method: SW846 8260B
Matrix: SL
% Solids: 84.
Report Date: 20-AUG-10

Compound	Qualifier	Result	Units	Dilution	LOQ	ADJ LOQ	ADJ MDL	ADJ LOD
Dichlorodifluoromethane	U	5.0	ug/Kgdrywt	1	10	10.	0.92	5.0
Chloromethane	U	5.0	ug/Kgdrywt	1	10	10.	1.4	5.0
Vinyl Chloride	U	5.0	ug/Kgdrywt	1	10	10.	0.87	5.0
Bromomethane	U	5.0	ug/Kgdrywt	1	10	10.	1.1	5.0
Chloroethane	U	5.0	ug/Kgdrywt	1	10	10.	1.3	5.0
Trichlorofluoromethane	U	5.0	ug/Kgdrywt	1	10	10.	0.91	5.0
1,1-Dichloroethene	U	2.5	ug/Kgdrywt	1	5	5.0	0.93	2.5
Carbon Disulfide	J	4.9	ug/Kgdrywt	1	5	5.0	0.78	2.5
Methylene Chloride	U	12.	ug/Kgdrywt	1	25	25.	7.9	12.
Acetone		43.	ug/Kgdrywt	1	25	25.	5.1	12.
trans-1,2-Dichloroethene	U	2.5	ug/Kgdrywt	1	5	5.0	0.71	2.5
Methyl tert-butyl Ether	U	2.5	ug/Kgdrywt	1	5	5.0	1.1	2.5
1,1-Dichloroethane	U	2.5	ug/Kgdrywt	1	5	5.0	1.7	2.5
cis-1,2-Dichloroethene	U	2.5	ug/Kgdrywt	1	5	5.0	0.91	2.5
2,2-Dichloropropane	U	2.5	ug/Kgdrywt	1	5	5.0	0.50	2.5
Bromochloromethane	U	2.5	ug/Kgdrywt	1	5	5.0	0.91	2.5
Chloroform	U	2.5	ug/Kgdrywt	1	5	5.0	0.35	2.5
Carbon Tetrachloride	U	2.5	ug/Kgdrywt	1	5	5.0	1.3	2.5
1,1,1-Trichloroethane	U	2.5	ug/Kgdrywt	1	5	5.0	0.42	2.5
1,1-Dichloropropene	U	2.5	ug/Kgdrywt	1	5	5.0	0.91	2.5
2-Butanone	U	12.	ug/Kgdrywt	1	25	25.	5.9	12.
Benzene	U	2.5	ug/Kgdrywt	1	5	5.0	0.92	2.5
1,2-Dichloroethane	U	2.5	ug/Kgdrywt	1	5	5.0	1.0	2.5
Trichloroethene	U	2.5	ug/Kgdrywt	1	5	5.0	0.59	2.5
Dibromomethane	U	2.5	ug/Kgdrywt	1	5	5.0	0.51	2.5
1,2-Dichloropropane	U	2.5	ug/Kgdrywt	1	5	5.0	1.4	2.5
Bromodichloromethane	U	2.5	ug/Kgdrywt	1	5	5.0	0.60	2.5
cis-1,3-Dichloropropene	U	2.5	ug/Kgdrywt	1	5	5.0	0.72	2.5
Toluene	U	2.5	ug/Kgdrywt	1	5	5.0	1.4	2.5
4-Methyl-2-Pentanone	U	12.	ug/Kgdrywt	1	25	25.	5.9	12.
Tetrachloroethene	U	2.5	ug/Kgdrywt	1	5	5.0	1.2	2.5
trans-1,3-Dichloropropene	U	2.5	ug/Kgdrywt	1	5	5.0	0.86	2.5
1,1,2-Trichloroethane	U	2.5	ug/Kgdrywt	1	5	5.0	0.97	2.5
Dibromochloromethane	U	2.5	ug/Kgdrywt	1	5	5.0	1.0	2.5
1,3-Dichloropropane	U	2.5	ug/Kgdrywt	1	5	5.0	0.94	2.5

600 Technology Way
P.O. Box 540, Scarborough, ME 04070
Tel:(207) 874-2400 Fax:(207) 775-4029

Report of Analytical Results

Client: Tetra Tech NUS, Inc.
Lab ID: SD4692-8
Client ID: B185A1-SB2-0305
Project: CTO WE19 NS Newport, Soi
SDG: WE19-6

Sample Date: 28-JUL-10
Received Date: 03-AUG-10
Extract Date: 05-AUG-10
Extracted By: DJP
Extraction Method:
Lab Prep Batch: WG80600

Analysis Date: 05-AUG-10
Analyst: DJP
Analysis Method: SW846 8260B
Matrix: SL
% Solids: 84.
Report Date: 20-AUG-10

Compound	Qualifier	Result	Units	Dilution	LOQ	ADJ LOQ	ADJ MDL	ADJ LOD
1,2-Dibromoethane	U	2.5	ug/Kgdrywt	1	5	5.0	1.2	2.5
2-Hexanone	U	12.	ug/Kgdrywt	1	25	25.	4.8	12.
Chlorobenzene	U	2.5	ug/Kgdrywt	1	5	5.0	0.51	2.5
Ethylbenzene	U	2.5	ug/Kgdrywt	1	5	5.0	0.65	2.5
1,1,1,2-Tetrachloroethane	U	2.5	ug/Kgdrywt	1	5	5.0	0.70	2.5
m+p-Xylenes	U	5.0	ug/Kgdrywt	1	10	10.	1.7	5.0
o-Xylene	U	2.5	ug/Kgdrywt	1	5	5.0	1.3	2.5
Styrene	U	2.5	ug/Kgdrywt	1	5	5.0	0.51	2.5
Bromoform	U	2.5	ug/Kgdrywt	1	5	5.0	0.70	2.5
Isopropylbenzene	U	2.5	ug/Kgdrywt	1	5	5.0	0.92	2.5
Bromobenzene	U	2.5	ug/Kgdrywt	1	5	5.0	0.74	2.5
N-Propylbenzene	U	2.5	ug/Kgdrywt	1	5	5.0	0.83	2.5
1,1,2,2-Tetrachloroethane	U	2.5	ug/Kgdrywt	1	5	5.0	0.84	2.5
1,3,5-Trimethylbenzene	U	2.5	ug/Kgdrywt	1	5	5.0	0.67	2.5
2-Chlorotoluene	U	2.5	ug/Kgdrywt	1	5	5.0	1.1	2.5
1,2,3-Trichloropropane	U	2.5	ug/Kgdrywt	1	5	5.0	1.2	2.5
4-Chlorotoluene	U	2.5	ug/Kgdrywt	1	5	5.0	0.49	2.5
tert-Butylbenzene	U	2.5	ug/Kgdrywt	1	5	5.0	0.90	2.5
1,2,4-Trimethylbenzene	U	2.5	ug/Kgdrywt	1	5	5.0	0.87	2.5
P-Isopropyltoluene	U	2.5	ug/Kgdrywt	1	5	5.0	0.76	2.5
1,3-Dichlorobenzene	U	2.5	ug/Kgdrywt	1	5	5.0	0.62	2.5
1,4-Dichlorobenzene	U	2.5	ug/Kgdrywt	1	5	5.0	0.44	2.5
N-Butylbenzene	U	2.5	ug/Kgdrywt	1	5	5.0	0.92	2.5
sec-Butylbenzene	U	2.5	ug/Kgdrywt	1	5	5.0	0.91	2.5
1,2-Dichlorobenzene	U	2.5	ug/Kgdrywt	1	5	5.0	0.78	2.5
1,2-Dibromo-3-Chloropropane	U	2.5	ug/Kgdrywt	1	5	5.0	1.5	2.5
Hexachlorobutadiene	U	2.5	ug/Kgdrywt	1	5	5.0	0.74	2.5
1,2,4-Trichlorobenzene	U	2.5	ug/Kgdrywt	1	5	5.0	0.79	2.5
1,2,3-Trichlorobenzene	U	2.5	ug/Kgdrywt	1	5	5.0	0.76	2.5
p-Bromofluorobenzene	*	120.	%					
Toluene-D8		116.	%					
1,2-Dichloroethane-D4		133.	%					
Dibromofluoromethane		119.	%					

600 Technology Way
P.O. Box 540, Scarborough, ME 04070
Tel:(207) 874-2400 Fax:(207) 775-4029

http://www.katahdinlab.com

Katahdin
ANALYTICAL SERVICES

Cert No E87604

Report of Analytical Results

Client: Tetra Tech NUS, Inc.
Lab ID: SD4692-10
Client ID: B185A1-SB3-0103
Project: CTO WE19 NS Newport, Soil
SDG: WE19-6

Sample Date: 28-JUL-10
Received Date: 03-AUG-10
Extract Date: 05-AUG-10
Extracted By: DJP
Extraction Method:
Lab Prep Batch: WG80600

Analysis Date: 05-AUG-10
Analyst: DJP
Analysis Method: SW846 8260B
Matrix: SL
% Solids: 84.
Report Date: 20-AUG-10

Compound	Qualifier	Result	Units	Dilution	LOQ	ADJ LOQ	ADJ MDL	ADJ LOD
Dichlorodifluoromethane	U	5.0	ug/Kgdrywt	1	10	10.	0.92	5.0
Chloromethane	U	5.0	ug/Kgdrywt	1	10	10.	1.4	5.0
Vinyl Chloride	U	5.0	ug/Kgdrywt	1	10	10.	0.87	5.0
Bromomethane	U	5.0	ug/Kgdrywt	1	10	10.	1.1	5.0
Chloroethane	U	5.0	ug/Kgdrywt	1	10	10.	1.3	5.0
Trichlorofluoromethane	U	5.0	ug/Kgdrywt	1	10	10.	0.91	5.0
1,1-Dichloroethene	U	2.5	ug/Kgdrywt	1	5	5.0	0.93	2.5
Carbon Disulfide	U	2.5	ug/Kgdrywt	1	5	5.0	0.78	2.5
Methylene Chloride	U	12.	ug/Kgdrywt	1	25	25.	7.9	12.
Acetone		60.	ug/Kgdrywt	1	25	25.	5.1	12.
trans-1,2-Dichloroethene	U	2.5	ug/Kgdrywt	1	5	5.0	0.71	2.5
Methyl tert-butyl Ether	U	2.5	ug/Kgdrywt	1	5	5.0	1.1	2.5
1,1-Dichloroethane	U	2.5	ug/Kgdrywt	1	5	5.0	1.7	2.5
cis-1,2-Dichloroethene	U	2.5	ug/Kgdrywt	1	5	5.0	0.91	2.5
2,2-Dichloropropane	U	2.5	ug/Kgdrywt	1	5	5.0	0.50	2.5
Bromochloromethane	U	2.5	ug/Kgdrywt	1	5	5.0	0.91	2.5
Chloroform	U	2.5	ug/Kgdrywt	1	5	5.0	0.35	2.5
Carbon Tetrachloride	U	2.5	ug/Kgdrywt	1	5	5.0	1.3	2.5
1,1,1-Trichloroethane	U	2.5	ug/Kgdrywt	1	5	5.0	0.42	2.5
1,1-Dichloropropene	U	2.5	ug/Kgdrywt	1	5	5.0	0.91	2.5
2-Butanone	U	12.	ug/Kgdrywt	1	25	25.	5.9	12.
Benzene	U	2.5	ug/Kgdrywt	1	5	5.0	0.92	2.5
1,2-Dichloroethane	U	2.5	ug/Kgdrywt	1	5	5.0	1.0	2.5
Trichloroethene	J	0.75	ug/Kgdrywt	1	5	5.0	0.59	2.5
Dibromomethane	U	2.5	ug/Kgdrywt	1	5	5.0	0.51	2.5
1,2-Dichloropropane	U	2.5	ug/Kgdrywt	1	5	5.0	1.4	2.5
Bromodichloromethane	U	2.5	ug/Kgdrywt	1	5	5.0	0.60	2.5
cis-1,3-Dichloropropene	U	2.5	ug/Kgdrywt	1	5	5.0	0.72	2.5
Toluene	U	2.5	ug/Kgdrywt	1	5	5.0	1.4	2.5
4-Methyl-2-Pentanone	U	12.	ug/Kgdrywt	1	25	25.	5.9	12.
Tetrachloroethene	U	2.5	ug/Kgdrywt	1	5	5.0	1.2	2.5
trans-1,3-Dichloropropene	U	2.5	ug/Kgdrywt	1	5	5.0	0.86	2.5
1,1,2-Trichloroethane	U	2.5	ug/Kgdrywt	1	5	5.0	0.97	2.5
Dibromochloromethane	U	2.5	ug/Kgdrywt	1	5	5.0	1.0	2.5
1,3-Dichloropropane	U	2.5	ug/Kgdrywt	1	5	5.0	0.94	2.5

600 Technology Way
P.O. Box 540, Scarborough, ME 04070
Tel:(207) 874-2400 Fax:(207) 775-4029

Report of Analytical Results

Client: Tetra Tech NUS, Inc.
Lab ID: SD4692-10
Client ID: B185A1-SB3-0103
Project: CTO WE19 NS Newport, Soi
SDG: WE19-6

Sample Date: 28-JUL-10
Received Date: 03-AUG-10
Extract Date: 05-AUG-10
Extracted By: DJP
Extraction Method:
Lab Prep Batch: WG80600

Analysis Date: 05-AUG-10
Analyst: DJP
Analysis Method: SW846 8260B
Matrix: SL
% Solids: 84.
Report Date: 20-AUG-10

Compound	Qualifier	Result	Units	Dilution	LOQ	ADJ LOQ	ADJ MDL	ADJ LOD
1,2-Dibromoethane	U	2.5	ug/Kgdrywt	1	5	5.0	1.2	2.5
2-Hexanone	U	12.	ug/Kgdrywt	1	25	25.	4.8	12.
Chlorobenzene	U	2.5	ug/Kgdrywt	1	5	5.0	0.51	2.5
Ethylbenzene	U	2.5	ug/Kgdrywt	1	5	5.0	0.65	2.5
1,1,1,2-Tetrachloroethane	U	2.5	ug/Kgdrywt	1	5	5.0	0.70	2.5
m+p-Xylenes	U	5.0	ug/Kgdrywt	1	10	10.	1.7	5.0
o-Xylene	U	2.5	ug/Kgdrywt	1	5	5.0	1.3	2.5
Styrene	U	2.5	ug/Kgdrywt	1	5	5.0	0.51	2.5
Bromoform	U	2.5	ug/Kgdrywt	1	5	5.0	0.70	2.5
Isopropylbenzene	U	2.5	ug/Kgdrywt	1	5	5.0	0.92	2.5
Bromobenzene	U	2.5	ug/Kgdrywt	1	5	5.0	0.74	2.5
N-Propylbenzene	U	2.5	ug/Kgdrywt	1	5	5.0	0.83	2.5
1,1,2,2-Tetrachloroethane	U	2.5	ug/Kgdrywt	1	5	5.0	0.84	2.5
1,3,5-Trimethylbenzene	U	2.5	ug/Kgdrywt	1	5	5.0	0.67	2.5
2-Chlorotoluene	U	2.5	ug/Kgdrywt	1	5	5.0	1.1	2.5
1,2,3-Trichloropropane	U	2.5	ug/Kgdrywt	1	5	5.0	1.2	2.5
4-Chlorotoluene	U	2.5	ug/Kgdrywt	1	5	5.0	0.49	2.5
tert-Butylbenzene	U	2.5	ug/Kgdrywt	1	5	5.0	0.90	2.5
1,2,4-Trimethylbenzene	U	2.5	ug/Kgdrywt	1	5	5.0	0.87	2.5
P-Isopropyltoluene	U	2.5	ug/Kgdrywt	1	5	5.0	0.76	2.5
1,3-Dichlorobenzene	U	2.5	ug/Kgdrywt	1	5	5.0	0.62	2.5
1,4-Dichlorobenzene	U	2.5	ug/Kgdrywt	1	5	5.0	0.44	2.5
N-Butylbenzene	U	2.5	ug/Kgdrywt	1	5	5.0	0.92	2.5
sec-Butylbenzene	U	2.5	ug/Kgdrywt	1	5	5.0	0.91	2.5
1,2-Dichlorobenzene	U	2.5	ug/Kgdrywt	1	5	5.0	0.78	2.5
1,2-Dibromo-3-Chloropropane	U	2.5	ug/Kgdrywt	1	5	5.0	1.5	2.5
Hexachlorobutadiene	U	2.5	ug/Kgdrywt	1	5	5.0	0.74	2.5
1,2,4-Trichlorobenzene	U	2.5	ug/Kgdrywt	1	5	5.0	0.79	2.5
1,2,3-Trichlorobenzene	U	2.5	ug/Kgdrywt	1	5	5.0	0.76	2.5
p-Bromofluorobenzene		115.	%					
Toluene-D8	*	119.	%					
1,2-Dichloroethane-D4		133.	%					
Dibromofluoromethane		120.	%					

600 Technology Way
P.O. Box 540, Scarborough, ME 04070
Tel:(207) 874-2400 Fax:(207) 775-4029

Report of Analytical Results

Client: Tetra Tech NUS, Inc.
Lab ID: SD4692-12
Client ID: B185A1-SB3-0305
Project: CTO WE19 NS Newport, Soi
SDG: WE19-6

Sample Date: 28-JUL-10
Received Date: 03-AUG-10
Extract Date: 04-AUG-10
Extracted By: DJP
Extraction Method:
Lab Prep Batch: WG80598

Analysis Date: 04-AUG-10
Analyst: DJP
Analysis Method: SW846 8260B
Matrix: SL
% Solids: 89.
Report Date: 20-AUG-10

Compound	Qualifier	Result	Units	Dilution	LOQ	ADJ LOQ	ADJ MDL	ADJ LOD
Dichlorodifluoromethane	U	4.7	ug/Kgdrywt	1	10	9.4	0.86	4.7
Chloromethane	U	4.7	ug/Kgdrywt	1	10	9.4	1.3	4.7
Vinyl Chloride	U	4.7	ug/Kgdrywt	1	10	9.4	0.82	4.7
Bromomethane	U	4.7	ug/Kgdrywt	1	10	9.4	1.0	4.7
Chloroethane	U	4.7	ug/Kgdrywt	1	10	9.4	1.2	4.7
Trichlorofluoromethane	U	4.7	ug/Kgdrywt	1	10	9.4	0.86	4.7
1,1-Dichloroethene	U	2.4	ug/Kgdrywt	1	5	4.7	0.87	2.4
Carbon Disulfide	J	3.3	ug/Kgdrywt	1	5	4.7	0.73	2.4
Methylene Chloride	U	12.	ug/Kgdrywt	1	25	24.	7.4	12.
Acetone		65.	ug/Kgdrywt	1	25	24.	4.8	12.
trans-1,2-Dichloroethene	U	2.4	ug/Kgdrywt	1	5	4.7	0.67	2.4
Methyl tert-butyl Ether	U	2.4	ug/Kgdrywt	1	5	4.7	1.0	2.4
1,1-Dichloroethane	U	2.4	ug/Kgdrywt	1	5	4.7	1.6	2.4
cis-1,2-Dichloroethene	U	2.4	ug/Kgdrywt	1	5	4.7	0.86	2.4
2,2-Dichloropropane	U	2.4	ug/Kgdrywt	1	5	4.7	0.47	2.4
Bromochloromethane	U	2.4	ug/Kgdrywt	1	5	4.7	0.86	2.4
Chloroform	U	2.4	ug/Kgdrywt	1	5	4.7	0.33	2.4
Carbon Tetrachloride	U	2.4	ug/Kgdrywt	1	5	4.7	1.2	2.4
1,1,1-Trichloroethane	U	2.4	ug/Kgdrywt	1	5	4.7	0.39	2.4
1,1-Dichloropropene	U	2.4	ug/Kgdrywt	1	5	4.7	0.86	2.4
2-Butanone	J	8.5	ug/Kgdrywt	1	25	24.	5.5	12.
Benzene	U	2.4	ug/Kgdrywt	1	5	4.7	0.86	2.4
1,2-Dichloroethane	U	2.4	ug/Kgdrywt	1	5	4.7	0.94	2.4
Trichloroethene	U	2.4	ug/Kgdrywt	1	5	4.7	0.55	2.4
Dibromomethane	U	2.4	ug/Kgdrywt	1	5	4.7	0.48	2.4
1,2-Dichloropropane	U	2.4	ug/Kgdrywt	1	5	4.7	1.3	2.4
Bromodichloromethane	U	2.4	ug/Kgdrywt	1	5	4.7	0.56	2.4
cis-1,3-Dichloropropene	U	2.4	ug/Kgdrywt	1	5	4.7	0.68	2.4
Toluene	U	2.4	ug/Kgdrywt	1	5	4.7	1.3	2.4
4-Methyl-2-Pentanone	U	12.	ug/Kgdrywt	1	25	24.	5.5	12.
Tetrachloroethene	U	2.4	ug/Kgdrywt	1	5	4.7	1.1	2.4
trans-1,3-Dichloropropene	U	2.4	ug/Kgdrywt	1	5	4.7	0.81	2.4
1,1,2-Trichloroethane	U	2.4	ug/Kgdrywt	1	5	4.7	0.91	2.4
Dibromochloromethane	U	2.4	ug/Kgdrywt	1	5	4.7	0.94	2.4
1,3-Dichloropropane	U	2.4	ug/Kgdrywt	1	5	4.7	0.88	2.4

600 Technology Way
P.O. Box 540, Scarborough, ME 04070
Tel:(207) 874-2400 Fax:(207) 775-4029

http://www.katahdinlab.com

Report of Analytical Results

Client: Tetra Tech NUS, Inc.
Lab ID: SD4692-12
Client ID: B185A1-SB3-0305
Project: CTO WE19 NS Newport, Soil
SDG: WE19-6

Sample Date: 28-JUL-10
Received Date: 03-AUG-10
Extract Date: 04-AUG-10
Extracted By: DJP
Extraction Method:
Lab Prep Batch: WG80598

Analysis Date: 04-AUG-10
Analyst: DJP
Analysis Method: SW846 8260B
Matrix: SL
% Solids: 89.
Report Date: 20-AUG-10

Compound	Qualifier	Result	Units	Dilution	LOQ	ADJ LOQ	ADJ MDL	ADJ LOD
1,2-Dibromoethane	U	2.4	ug/Kgdrywt	1	5	4.7	1.1	2.4
2-Hexanone	U	12.	ug/Kgdrywt	1	25	24.	4.5	12.
Chlorobenzene	U	2.4	ug/Kgdrywt	1	5	4.7	0.48	2.4
Ethylbenzene	U	2.4	ug/Kgdrywt	1	5	4.7	0.61	2.4
1,1,1,2-Tetrachloroethane	U	2.4	ug/Kgdrywt	1	5	4.7	0.66	2.4
m+p-Xylenes	U	4.7	ug/Kgdrywt	1	10	9.4	1.6	4.7
o-Xylene	U	2.4	ug/Kgdrywt	1	5	4.7	1.2	2.4
Styrene	U	2.4	ug/Kgdrywt	1	5	4.7	0.48	2.4
Bromoform	U	2.4	ug/Kgdrywt	1	5	4.7	0.66	2.4
Isopropylbenzene	U	2.4	ug/Kgdrywt	1	5	4.7	0.86	2.4
Bromobenzene	U	2.4	ug/Kgdrywt	1	5	4.7	0.70	2.4
N-Propylbenzene	U	2.4	ug/Kgdrywt	1	5	4.7	0.78	2.4
1,1,2,2-Tetrachloroethane	U	2.4	ug/Kgdrywt	1	5	4.7	0.79	2.4
1,3,5-Trimethylbenzene	U	2.4	ug/Kgdrywt	1	5	4.7	0.63	2.4
2-Chlorotoluene	U	2.4	ug/Kgdrywt	1	5	4.7	1.0	2.4
1,2,3-Trichloropropane	U	2.4	ug/Kgdrywt	1	5	4.7	1.1	2.4
4-Chlorotoluene	U	2.4	ug/Kgdrywt	1	5	4.7	0.46	2.4
tert-Butylbenzene	U	2.4	ug/Kgdrywt	1	5	4.7	0.85	2.4
1,2,4-Trimethylbenzene	U	2.4	ug/Kgdrywt	1	5	4.7	0.82	2.4
P-Isopropyltoluene	U	2.4	ug/Kgdrywt	1	5	4.7	0.71	2.4
1,3-Dichlorobenzene	U	2.4	ug/Kgdrywt	1	5	4.7	0.58	2.4
1,4-Dichlorobenzene	U	2.4	ug/Kgdrywt	1	5	4.7	0.41	2.4
N-Butylbenzene	U	2.4	ug/Kgdrywt	1	5	4.7	0.86	2.4
sec-Butylbenzene	U	2.4	ug/Kgdrywt	1	5	4.7	0.86	2.4
1,2-Dichlorobenzene	U	2.4	ug/Kgdrywt	1	5	4.7	0.73	2.4
1,2-Dibromo-3-Chloropropane	U	2.4	ug/Kgdrywt	1	5	4.7	1.4	2.4
Hexachlorobutadiene	U	2.4	ug/Kgdrywt	1	5	4.7	0.70	2.4
1,2,4-Trichlorobenzene	U	2.4	ug/Kgdrywt	1	5	4.7	0.74	2.4
1,2,3-Trichlorobenzene	U	2.4	ug/Kgdrywt	1	5	4.7	0.71	2.4
p-Bromofluorobenzene	*	464.	%					
Toluene-D8		84.4	%					
1,2-Dichloroethane-D4		127.	%					
Dibromofluoromethane		112.	%					

600 Technology Way
P.O. Box 540, Scarborough, ME 04070
Tel:(207) 874-2400 Fax:(207) 775-4029

Katahdin
ANALYTICAL SERVICES

Cert No E87604

Report of Analytical Results

Client: Tetra Tech NUS, Inc.
Lab ID: SD4692-14
Client ID: B185A1-SB4-0103
Project: CTO WE19 NS Newport, Soi
SDG: WE19-6

Sample Date: 28-JUL-10
Received Date: 03-AUG-10
Extract Date: 04-AUG-10
Extracted By: DJP
Extraction Method:
Lab Prep Batch: WG80598

Analysis Date: 04-AUG-10
Analyst: DJP
Analysis Method: SW846 8260B
Matrix: SL
% Solids: 78.
Report Date: 20-AUG-10

Compound	Qualifier	Result	Units	Dilution	LOQ	ADJ LOQ	ADJ MDL	ADJ LOD
Dichlorodifluoromethane	U	4.8	ug/Kgdrywt	1	10	9.6	0.88	4.8
Chloromethane	U	4.8	ug/Kgdrywt	1	10	9.6	1.3	4.8
Vinyl Chloride	U	4.8	ug/Kgdrywt	1	10	9.6	0.84	4.8
Bromomethane	U	4.8	ug/Kgdrywt	1	10	9.6	1.0	4.8
Chloroethane	U	4.8	ug/Kgdrywt	1	10	9.6	1.2	4.8
Trichlorofluoromethane	U	4.8	ug/Kgdrywt	1	10	9.6	0.87	4.8
1,1-Dichloroethene	U	2.4	ug/Kgdrywt	1	5	4.8	0.89	2.4
Carbon Disulfide	U	2.4	ug/Kgdrywt	1	5	4.8	0.75	2.4
Methylene Chloride	U	12.	ug/Kgdrywt	1	25	24.	7.6	12.
Acetone		200	ug/Kgdrywt	1	25	24.	4.9	12.
trans-1,2-Dichloroethene	U	2.4	ug/Kgdrywt	1	5	4.8	0.68	2.4
Methyl tert-butyl Ether	U	2.4	ug/Kgdrywt	1	5	4.8	1.0	2.4
1,1-Dichloroethane	U	2.4	ug/Kgdrywt	1	5	4.8	1.6	2.4
cis-1,2-Dichloroethene	U	2.4	ug/Kgdrywt	1	5	4.8	0.87	2.4
2,2-Dichloropropane	U	2.4	ug/Kgdrywt	1	5	4.8	0.48	2.4
Bromochloromethane	U	2.4	ug/Kgdrywt	1	5	4.8	0.87	2.4
Chloroform	U	2.4	ug/Kgdrywt	1	5	4.8	0.34	2.4
Carbon Tetrachloride	U	2.4	ug/Kgdrywt	1	5	4.8	1.2	2.4
1,1,1-Trichloroethane	U	2.4	ug/Kgdrywt	1	5	4.8	0.40	2.4
1,1-Dichloropropene	U	2.4	ug/Kgdrywt	1	5	4.8	0.87	2.4
2-Butanone	J	15.	ug/Kgdrywt	1	25	24.	5.7	12.
Benzene	U	2.4	ug/Kgdrywt	1	5	4.8	0.88	2.4
1,2-Dichloroethane	U	2.4	ug/Kgdrywt	1	5	4.8	0.96	2.4
Trichloroethene	J	1.1	ug/Kgdrywt	1	5	4.8	0.57	2.4
Dibromomethane	U	2.4	ug/Kgdrywt	1	5	4.8	0.49	2.4
1,2-Dichloropropane	U	2.4	ug/Kgdrywt	1	5	4.8	1.3	2.4
Bromodichloromethane	U	2.4	ug/Kgdrywt	1	5	4.8	0.58	2.4
cis-1,3-Dichloropropene	U	2.4	ug/Kgdrywt	1	5	4.8	0.69	2.4
Toluene	U	2.4	ug/Kgdrywt	1	5	4.8	1.3	2.4
4-Methyl-2-Pentanone	U	12.	ug/Kgdrywt	1	25	24.	5.7	12.
Tetrachloroethene	U	2.4	ug/Kgdrywt	1	5	4.8	1.2	2.4
trans-1,3-Dichloropropene	U	2.4	ug/Kgdrywt	1	5	4.8	0.82	2.4
1,1,2-Trichloroethane	U	2.4	ug/Kgdrywt	1	5	4.8	0.93	2.4
Dibromochloromethane	U	2.4	ug/Kgdrywt	1	5	4.8	0.96	2.4
1,3-Dichloropropane	U	2.4	ug/Kgdrywt	1	5	4.8	0.90	2.4

600 Technology Way
P.O. Box 540, Scarborough, ME 04070
Tel:(207) 874-2400 Fax:(207) 775-4029

Report of Analytical Results

Client: Tetra Tech NUS, Inc.
Lab ID: SD4692-14
Client ID: B185A1-SB4-0103
Project: CTO WE19 NS Newport, Soil
SDG: WE19-6

Sample Date: 28-JUL-10
Received Date: 03-AUG-10
Extract Date: 04-AUG-10
Extracted By: DJP
Extraction Method:
Lab Prep Batch: WG80598

Analysis Date: 04-AUG-10
Analyst: DJP
Analysis Method: SW846 8260B
Matrix: SL
% Solids: 78.
Report Date: 20-AUG-10

Compound	Qualifier	Result	Units	Dilution	LOQ	ADJ LOQ	ADJ MDL	ADJ LOD
1,2-Dibromoethane	U	2.4	ug/Kgdrywt	1	5	4.8	1.2	2.4
2-Hexanone	U	12.	ug/Kgdrywt	1	25	24.	4.6	12.
Chlorobenzene	U	2.4	ug/Kgdrywt	1	5	4.8	0.49	2.4
Ethylbenzene	U	2.4	ug/Kgdrywt	1	5	4.8	0.62	2.4
1,1,1,2-Tetrachloroethane	U	2.4	ug/Kgdrywt	1	5	4.8	0.67	2.4
m+p-Xylenes	U	4.8	ug/Kgdrywt	1	10	9.6	1.6	4.8
o-Xylene	U	2.4	ug/Kgdrywt	1	5	4.8	1.2	2.4
Styrene	U	2.4	ug/Kgdrywt	1	5	4.8	0.49	2.4
Bromoform	U	2.4	ug/Kgdrywt	1	5	4.8	0.67	2.4
Isopropylbenzene	U	2.4	ug/Kgdrywt	1	5	4.8	0.88	2.4
Bromobenzene	U	2.4	ug/Kgdrywt	1	5	4.8	0.71	2.4
N-Propylbenzene	U	2.4	ug/Kgdrywt	1	5	4.8	0.80	2.4
1,1,2,2-Tetrachloroethane	U	2.4	ug/Kgdrywt	1	5	4.8	0.81	2.4
1,3,5-Trimethylbenzene	U	2.4	ug/Kgdrywt	1	5	4.8	0.64	2.4
2-Chlorotoluene	U	2.4	ug/Kgdrywt	1	5	4.8	1.0	2.4
1,2,3-Trichloropropane	U	2.4	ug/Kgdrywt	1	5	4.8	1.2	2.4
4-Chlorotoluene	U	2.4	ug/Kgdrywt	1	5	4.8	0.47	2.4
tert-Butylbenzene	U	2.4	ug/Kgdrywt	1	5	4.8	0.86	2.4
1,2,4-Trimethylbenzene	U	2.4	ug/Kgdrywt	1	5	4.8	0.84	2.4
P-Isopropyltoluene	U	2.4	ug/Kgdrywt	1	5	4.8	0.73	2.4
1,3-Dichlorobenzene	U	2.4	ug/Kgdrywt	1	5	4.8	0.60	2.4
1,4-Dichlorobenzene	U	2.4	ug/Kgdrywt	1	5	4.8	0.42	2.4
N-Butylbenzene	U	2.4	ug/Kgdrywt	1	5	4.8	0.88	2.4
sec-Butylbenzene	U	2.4	ug/Kgdrywt	1	5	4.8	0.87	2.4
1,2-Dichlorobenzene	U	2.4	ug/Kgdrywt	1	5	4.8	0.75	2.4
1,2-Dibromo-3-Chloropropane	U	2.4	ug/Kgdrywt	1	5	4.8	1.4	2.4
Hexachlorobutadiene	U	2.4	ug/Kgdrywt	1	5	4.8	0.71	2.4
1,2,4-Trichlorobenzene	U	2.4	ug/Kgdrywt	1	5	4.8	0.76	2.4
1,2,3-Trichlorobenzene	U	2.4	ug/Kgdrywt	1	5	4.8	0.73	2.4
p-Bromofluorobenzene		65.6	%					
Toluene-D8		89.8	%					
1,2-Dichloroethane-D4		96.7	%					
Dibromofluoromethane		93.8	%					

600 Technology Way
P.O. Box 540, Scarborough, ME 04070
Tel:(207) 874-2400 Fax:(207) 775-4029

Katahdin
ANALYTICAL SERVICES

Cert No E87604

Report of Analytical Results

Client: Tetra Tech NUS, Inc.
Lab ID: SD4692-16
Client ID: B185A1-SB4-0507
Project: CTO WE19 NS Newport, Soi
SDG: WE19-6

Sample Date: 28-JUL-10
Received Date: 03-AUG-10
Extract Date: 04-AUG-10
Extracted By: DJP
Extraction Method:
Lab Prep Batch: WG80598

Analysis Date: 04-AUG-10
Analyst: DJP
Analysis Method: SW846 8260B
Matrix: SL
% Solids: 87.
Report Date: 20-AUG-10

Compound	Qualifier	Result	Units	Dilution	LOQ	ADJ LOQ	ADJ MDL	ADJ LOD
Dichlorodifluoromethane	U	4.7	ug/Kgdrywt	1	10	9.4	0.86	4.7
Chloromethane	U	4.7	ug/Kgdrywt	1	10	9.4	1.3	4.7
Vinyl Chloride	U	4.7	ug/Kgdrywt	1	10	9.4	0.82	4.7
Bromomethane	U	4.7	ug/Kgdrywt	1	10	9.4	1.0	4.7
Chloroethane	U	4.7	ug/Kgdrywt	1	10	9.4	1.2	4.7
Trichlorofluoromethane	U	4.7	ug/Kgdrywt	1	10	9.4	0.86	4.7
1,1-Dichloroethene	U	2.4	ug/Kgdrywt	1	5	4.7	0.87	2.4
Carbon Disulfide	U	2.4	ug/Kgdrywt	1	5	4.7	0.73	2.4
Methylene Chloride	U	12.	ug/Kgdrywt	1	25	24.	7.4	12.
Acetone	J	15.	ug/Kgdrywt	1	25	24.	4.8	12.
trans-1,2-Dichloroethene	U	2.4	ug/Kgdrywt	1	5	4.7	0.67	2.4
Methyl tert-butyl Ether	U	2.4	ug/Kgdrywt	1	5	4.7	1.0	2.4
1,1-Dichloroethane	U	2.4	ug/Kgdrywt	1	5	4.7	1.6	2.4
cis-1,2-Dichloroethene	U	2.4	ug/Kgdrywt	1	5	4.7	0.86	2.4
2,2-Dichloropropane	U	2.4	ug/Kgdrywt	1	5	4.7	0.47	2.4
Bromochloromethane	U	2.4	ug/Kgdrywt	1	5	4.7	0.86	2.4
Chloroform	U	2.4	ug/Kgdrywt	1	5	4.7	0.33	2.4
Carbon Tetrachloride	U	2.4	ug/Kgdrywt	1	5	4.7	1.2	2.4
1,1,1-Trichloroethane	U	2.4	ug/Kgdrywt	1	5	4.7	0.39	2.4
1,1-Dichloropropene	U	2.4	ug/Kgdrywt	1	5	4.7	0.86	2.4
2-Butanone	U	12.	ug/Kgdrywt	1	25	24.	5.5	12.
Benzene	U	2.4	ug/Kgdrywt	1	5	4.7	0.86	2.4
1,2-Dichloroethane	U	2.4	ug/Kgdrywt	1	5	4.7	0.94	2.4
Trichloroethene	J	1.4	ug/Kgdrywt	1	5	4.7	0.55	2.4
Dibromomethane	U	2.4	ug/Kgdrywt	1	5	4.7	0.48	2.4
1,2-Dichloropropane	U	2.4	ug/Kgdrywt	1	5	4.7	1.3	2.4
Bromodichloromethane	U	2.4	ug/Kgdrywt	1	5	4.7	0.56	2.4
cis-1,3-Dichloropropene	U	2.4	ug/Kgdrywt	1	5	4.7	0.68	2.4
Toluene	U	2.4	ug/Kgdrywt	1	5	4.7	1.3	2.4
4-Methyl-2-Pentanone	U	12.	ug/Kgdrywt	1	25	24.	5.5	12.
Tetrachloroethene		7.4	ug/Kgdrywt	1	5	4.7	1.1	2.4
trans-1,3-Dichloropropene	U	2.4	ug/Kgdrywt	1	5	4.7	0.81	2.4
1,1,2-Trichloroethane	U	2.4	ug/Kgdrywt	1	5	4.7	0.91	2.4
Dibromochloromethane	U	2.4	ug/Kgdrywt	1	5	4.7	0.94	2.4
1,3-Dichloropropane	U	2.4	ug/Kgdrywt	1	5	4.7	0.88	2.4

600 Technology Way
P.O. Box 540, Scarborough, ME 04070
Tel:(207) 874-2400 Fax:(207) 775-4029

Report of Analytical Results

Client: Tetra Tech NUS, Inc.
Lab ID: SD4692-16
Client ID: B185A1-SB4-0507
Project: CTO WE19 NS Newport, Soi
SDG: WE19-6

Sample Date: 28-JUL-10
Received Date: 03-AUG-10
Extract Date: 04-AUG-10
Extracted By: DJP
Extraction Method:
Lab Prep Batch: WG80598

Analysis Date: 04-AUG-10
Analyst: DJP
Analysis Method: SW846 8260B
Matrix: SL
% Solids: 87.
Report Date: 20-AUG-10

Compound	Qualifier	Result	Units	Dilution	LOQ	ADJ LOQ	ADJ MDL	ADJ LOD
1,2-Dibromoethane	U	2.4	ug/Kgdrywt	1	5	4.7	1.1	2.4
2-Hexanone	U	12.	ug/Kgdrywt	1	25	24.	4.5	12.
Chlorobenzene	U	2.4	ug/Kgdrywt	1	5	4.7	0.48	2.4
Ethylbenzene	U	2.4	ug/Kgdrywt	1	5	4.7	0.61	2.4
1,1,1,2-Tetrachloroethane	U	2.4	ug/Kgdrywt	1	5	4.7	0.66	2.4
m+p-Xylenes	U	4.7	ug/Kgdrywt	1	10	9.4	1.6	4.7
o-Xylene	U	2.4	ug/Kgdrywt	1	5	4.7	1.2	2.4
Styrene	U	2.4	ug/Kgdrywt	1	5	4.7	0.48	2.4
Bromoform	U	2.4	ug/Kgdrywt	1	5	4.7	0.66	2.4
Isopropylbenzene	U	2.4	ug/Kgdrywt	1	5	4.7	0.86	2.4
Bromobenzene	U	2.4	ug/Kgdrywt	1	5	4.7	0.70	2.4
N-Propylbenzene	U	2.4	ug/Kgdrywt	1	5	4.7	0.78	2.4
1,1,2,2-Tetrachloroethane	U	2.4	ug/Kgdrywt	1	5	4.7	0.79	2.4
1,3,5-Trimethylbenzene	U	2.4	ug/Kgdrywt	1	5	4.7	0.63	2.4
2-Chlorotoluene	U	2.4	ug/Kgdrywt	1	5	4.7	1.0	2.4
1,2,3-Trichloropropane	U	2.4	ug/Kgdrywt	1	5	4.7	1.1	2.4
4-Chlorotoluene	U	2.4	ug/Kgdrywt	1	5	4.7	0.46	2.4
tert-Butylbenzene	U	2.4	ug/Kgdrywt	1	5	4.7	0.85	2.4
1,2,4-Trimethylbenzene	U	2.4	ug/Kgdrywt	1	5	4.7	0.82	2.4
P-Isopropyltoluene	U	2.4	ug/Kgdrywt	1	5	4.7	0.71	2.4
1,3-Dichlorobenzene	U	2.4	ug/Kgdrywt	1	5	4.7	0.58	2.4
1,4-Dichlorobenzene	U	2.4	ug/Kgdrywt	1	5	4.7	0.41	2.4
N-Butylbenzene	U	2.4	ug/Kgdrywt	1	5	4.7	0.86	2.4
sec-Butylbenzene	U	2.4	ug/Kgdrywt	1	5	4.7	0.86	2.4
1,2-Dichlorobenzene	U	2.4	ug/Kgdrywt	1	5	4.7	0.73	2.4
1,2-Dibromo-3-Chloropropane	U	2.4	ug/Kgdrywt	1	5	4.7	1.4	2.4
Hexachlorobutadiene	U	2.4	ug/Kgdrywt	1	5	4.7	0.70	2.4
1,2,4-Trichlorobenzene	U	2.4	ug/Kgdrywt	1	5	4.7	0.74	2.4
1,2,3-Trichlorobenzene	U	2.4	ug/Kgdrywt	1	5	4.7	0.71	2.4
p-Bromofluorobenzene		85.3	%					
Toluene-D8		89.5	%					
1,2-Dichloroethane-D4		101.	%					
Dibromofluoromethane		93.8	%					

600 Technology Way
P.O. Box 540, Scarborough, ME 04070
Tel:(207) 874-2400 Fax:(207) 775-4029

http://www.katahdinlab.com

Report of Analytical Results

Client: Tetra Tech NUS, Inc.
Lab ID: SD4692-18
Client ID: B185A3-SB1-0103
Project: CTO WE19 NS Newport, Soi
SDG: WE19-6

Sample Date: 28-JUL-10
Received Date: 03-AUG-10
Extract Date: 04-AUG-10
Extracted By: DJP
Extraction Method:
Lab Prep Batch: WG80598

Analysis Date: 04-AUG-10
Analyst: DJP
Analysis Method: SW846 8260B
Matrix: SL
% Solids: 74.
Report Date: 20-AUG-10

Compound	Qualifier	Result	Units	Dilution	LOQ	ADJ LOQ	ADJ MDL	ADJ LOD
Dichlorodifluoromethane	U	6.0	ug/Kgdrywt	1	10	12.	1.1	6.0
Chloromethane	U	6.0	ug/Kgdrywt	1	10	12.	1.7	6.0
Vinyl Chloride	U	6.0	ug/Kgdrywt	1	10	12.	1.0	6.0
Bromomethane	U	6.0	ug/Kgdrywt	1	10	12.	1.3	6.0
Chloroethane	U	6.0	ug/Kgdrywt	1	10	12.	1.6	6.0
Trichlorofluoromethane	U	6.0	ug/Kgdrywt	1	10	12.	1.1	6.0
1,1-Dichloroethene	U	3.0	ug/Kgdrywt	1	5	6.0	1.1	3.0
Carbon Disulfide	U	3.0	ug/Kgdrywt	1	5	6.0	0.94	3.0
Methylene Chloride	U	15.	ug/Kgdrywt	1	25	30.	9.5	15.
Acetone		73.	ug/Kgdrywt	1	25	30.	6.1	15.
trans-1,2-Dichloroethene	U	3.0	ug/Kgdrywt	1	5	6.0	0.85	3.0
Methyl tert-butyl Ether	U	3.0	ug/Kgdrywt	1	5	6.0	1.3	3.0
1,1-Dichloroethane	U	3.0	ug/Kgdrywt	1	5	6.0	2.0	3.0
cis-1,2-Dichloroethene	U	3.0	ug/Kgdrywt	1	5	6.0	1.1	3.0
2,2-Dichloropropane	U	3.0	ug/Kgdrywt	1	5	6.0	0.60	3.0
Bromochloromethane	U	3.0	ug/Kgdrywt	1	5	6.0	1.1	3.0
Chloroform	U	3.0	ug/Kgdrywt	1	5	6.0	0.42	3.0
Carbon Tetrachloride	U	3.0	ug/Kgdrywt	1	5	6.0	1.6	3.0
1,1,1-Trichloroethane	U	3.0	ug/Kgdrywt	1	5	6.0	0.50	3.0
1,1-Dichloropropene	U	3.0	ug/Kgdrywt	1	5	6.0	1.1	3.0
2-Butanone	U	15.	ug/Kgdrywt	1	25	30.	7.1	15.
Benzene	U	3.0	ug/Kgdrywt	1	5	6.0	1.1	3.0
1,2-Dichloroethane	U	3.0	ug/Kgdrywt	1	5	6.0	1.2	3.0
Trichloroethene	U	3.0	ug/Kgdrywt	1	5	6.0	0.71	3.0
Dibromomethane	U	3.0	ug/Kgdrywt	1	5	6.0	0.61	3.0
1,2-Dichloropropane	U	3.0	ug/Kgdrywt	1	5	6.0	1.7	3.0
Bromodichloromethane	U	3.0	ug/Kgdrywt	1	5	6.0	0.72	3.0
cis-1,3-Dichloropropene	U	3.0	ug/Kgdrywt	1	5	6.0	0.86	3.0
Toluene	U	3.0	ug/Kgdrywt	1	5	6.0	1.7	3.0
4-Methyl-2-Pentanone	U	15.	ug/Kgdrywt	1	25	30.	7.1	15.
Tetrachloroethene	U	3.0	ug/Kgdrywt	1	5	6.0	1.4	3.0
trans-1,3-Dichloropropene	U	3.0	ug/Kgdrywt	1	5	6.0	1.0	3.0
1,1,2-Trichloroethane	U	3.0	ug/Kgdrywt	1	5	6.0	1.2	3.0
Dibromochloromethane	U	3.0	ug/Kgdrywt	1	5	6.0	1.2	3.0
1,3-Dichloropropane	U	3.0	ug/Kgdrywt	1	5	6.0	1.1	3.0

600 Technology Way
P.O. Box 540, Scarborough, ME 04070
Tel:(207) 874-2400 Fax:(207) 775-4029

http://www.katahdinlab.com

Report of Analytical Results

Client: Tetra Tech NUS, Inc.
Lab ID: SD4692-18
Client ID: B185A3-SB1-0103
Project: CTO WE19 NS Newport, Soi
SDG: WE19-6

Sample Date: 28-JUL-10
Received Date: 03-AUG-10
Extract Date: 04-AUG-10
Extracted By: DJP
Extraction Method:
Lab Prep Batch: WG80598

Analysis Date: 04-AUG-10
Analyst: DJP
Analysis Method: SW846 8260B
Matrix: SL
% Solids: 74.
Report Date: 20-AUG-10

Compound	Qualifier	Result	Units	Dilution	LOQ	ADJ LOQ	ADJ MDL	ADJ LOD
1,2-Dibromoethane	U	3.0	ug/Kgdrywt	1	5	6.0	1.4	3.0
2-Hexanone	U	15.	ug/Kgdrywt	1	25	30.	5.8	15.
Chlorobenzene	U	3.0	ug/Kgdrywt	1	5	6.0	0.61	3.0
Ethylbenzene	U	3.0	ug/Kgdrywt	1	5	6.0	0.78	3.0
1,1,1,2-Tetrachloroethane	U	3.0	ug/Kgdrywt	1	5	6.0	0.84	3.0
m+p-Xylenes	U	6.0	ug/Kgdrywt	1	10	12.	2.0	6.0
o-Xylene	U	3.0	ug/Kgdrywt	1	5	6.0	1.6	3.0
Styrene	U	3.0	ug/Kgdrywt	1	5	6.0	0.61	3.0
Bromoform	U	3.0	ug/Kgdrywt	1	5	6.0	0.84	3.0
Isopropylbenzene	U	3.0	ug/Kgdrywt	1	5	6.0	1.1	3.0
Bromobenzene	U	3.0	ug/Kgdrywt	1	5	6.0	0.89	3.0
N-Propylbenzene	U	3.0	ug/Kgdrywt	1	5	6.0	1.0	3.0
1,1,2,2-Tetrachloroethane	U	3.0	ug/Kgdrywt	1	5	6.0	1.0	3.0
1,3,5-Trimethylbenzene	U	3.0	ug/Kgdrywt	1	5	6.0	0.80	3.0
2-Chlorotoluene	U	3.0	ug/Kgdrywt	1	5	6.0	1.3	3.0
1,2,3-Trichloropropane	U	3.0	ug/Kgdrywt	1	5	6.0	1.4	3.0
4-Chlorotoluene	U	3.0	ug/Kgdrywt	1	5	6.0	0.59	3.0
tert-Butylbenzene	U	3.0	ug/Kgdrywt	1	5	6.0	1.1	3.0
1,2,4-Trimethylbenzene	U	3.0	ug/Kgdrywt	1	5	6.0	1.0	3.0
P-Isopropyltoluene	U	3.0	ug/Kgdrywt	1	5	6.0	0.91	3.0
1,3-Dichlorobenzene	U	3.0	ug/Kgdrywt	1	5	6.0	0.74	3.0
1,4-Dichlorobenzene	U	3.0	ug/Kgdrywt	1	5	6.0	0.53	3.0
N-Butylbenzene	U	3.0	ug/Kgdrywt	1	5	6.0	1.1	3.0
sec-Butylbenzene	U	3.0	ug/Kgdrywt	1	5	6.0	1.1	3.0
1,2-Dichlorobenzene	U	3.0	ug/Kgdrywt	1	5	6.0	0.94	3.0
1,2-Dibromo-3-Chloropropane	U	3.0	ug/Kgdrywt	1	5	6.0	1.8	3.0
Hexachlorobutadiene	U	3.0	ug/Kgdrywt	1	5	6.0	0.89	3.0
1,2,4-Trichlorobenzene	U	3.0	ug/Kgdrywt	1	5	6.0	0.95	3.0
1,2,3-Trichlorobenzene	U	3.0	ug/Kgdrywt	1	5	6.0	0.91	3.0
p-Bromofluorobenzene		91.5	%					
Toluene-D8		94.5	%					
1,2-Dichloroethane-D4		106.	%					
Dibromofluoromethane		97.0	%					

600 Technology Way
P.O. Box 540, Scarborough, ME 04070
Tel:(207) 874-2400 Fax:(207) 775-4029

Report of Analytical Results

Client: Tetra Tech NUS, Inc.
Lab ID: SD4692-20
Client ID: B185A3-SB1-0305
Project: CTO WE19 NS Newport, Soi
SDG: WE19-6

Sample Date: 28-JUL-10
Received Date: 03-AUG-10
Extract Date: 04-AUG-10
Extracted By: DJP
Extraction Method:
Lab Prep Batch: WG80598

Analysis Date: 04-AUG-10
Analyst: DJP
Analysis Method: SW846 8260B
Matrix: SL
% Solids: 93.
Report Date: 20-AUG-10

Compound	Qualifier	Result	Units	Dilution	LOQ	ADJ LOQ	ADJ MDL	ADJ LOD
Dichlorodifluoromethane	U	4.0	ug/Kgdrywt	1	10	7.9	0.73	4.0
Chloromethane	U	4.0	ug/Kgdrywt	1	10	7.9	1.1	4.0
Vinyl Chloride	U	4.0	ug/Kgdrywt	1	10	7.9	0.69	4.0
Bromomethane	U	4.0	ug/Kgdrywt	1	10	7.9	0.87	4.0
Chloroethane	U	4.0	ug/Kgdrywt	1	10	7.9	1.0	4.0
Trichlorofluoromethane	U	4.0	ug/Kgdrywt	1	10	7.9	0.72	4.0
1,1-Dichloroethene	U	2.0	ug/Kgdrywt	1	5	4.0	0.73	2.0
Carbon Disulfide	U	2.0	ug/Kgdrywt	1	5	4.0	0.62	2.0
Methylene Chloride	U	9.9	ug/Kgdrywt	1	25	20.	6.2	9.9
Acetone		44.	ug/Kgdrywt	1	25	20.	4.0	9.9
trans-1,2-Dichloroethene	U	2.0	ug/Kgdrywt	1	5	4.0	0.56	2.0
Methyl tert-butyl Ether	U	2.0	ug/Kgdrywt	1	5	4.0	0.87	2.0
1,1-Dichloroethane	U	2.0	ug/Kgdrywt	1	5	4.0	1.3	2.0
cis-1,2-Dichloroethene	U	2.0	ug/Kgdrywt	1	5	4.0	0.72	2.0
2,2-Dichloropropane	U	2.0	ug/Kgdrywt	1	5	4.0	0.40	2.0
Bromochloromethane	U	2.0	ug/Kgdrywt	1	5	4.0	0.72	2.0
Chloroform	U	2.0	ug/Kgdrywt	1	5	4.0	0.28	2.0
Carbon Tetrachloride	U	2.0	ug/Kgdrywt	1	5	4.0	1.0	2.0
1,1,1-Trichloroethane	U	2.0	ug/Kgdrywt	1	5	4.0	0.33	2.0
1,1-Dichloropropene	U	2.0	ug/Kgdrywt	1	5	4.0	0.72	2.0
2-Butanone	U	9.9	ug/Kgdrywt	1	25	20.	4.7	9.9
Benzene	U	2.0	ug/Kgdrywt	1	5	4.0	0.73	2.0
1,2-Dichloroethane	U	2.0	ug/Kgdrywt	1	5	4.0	0.79	2.0
Trichloroethene	U	2.0	ug/Kgdrywt	1	5	4.0	0.47	2.0
Dibromomethane	U	2.0	ug/Kgdrywt	1	5	4.0	0.40	2.0
1,2-Dichloropropane	U	2.0	ug/Kgdrywt	1	5	4.0	1.1	2.0
Bromodichloromethane	U	2.0	ug/Kgdrywt	1	5	4.0	0.47	2.0
cis-1,3-Dichloropropene	U	2.0	ug/Kgdrywt	1	5	4.0	0.57	2.0
Toluene	U	2.0	ug/Kgdrywt	1	5	4.0	1.1	2.0
4-Methyl-2-Pentanone	U	9.9	ug/Kgdrywt	1	25	20.	4.7	9.9
Tetrachloroethene	U	2.0	ug/Kgdrywt	1	5	4.0	0.95	2.0
trans-1,3-Dichloropropene	U	2.0	ug/Kgdrywt	1	5	4.0	0.68	2.0
1,1,2-Trichloroethane	U	2.0	ug/Kgdrywt	1	5	4.0	0.77	2.0
Dibromochloromethane	U	2.0	ug/Kgdrywt	1	5	4.0	0.79	2.0
1,3-Dichloropropane	U	2.0	ug/Kgdrywt	1	5	4.0	0.74	2.0

600 Technology Way
P.O. Box 540, Scarborough, ME 04070
Tel:(207) 874-2400 Fax:(207) 775-4029

Report of Analytical Results

Client: Tetra Tech NUS, Inc.
Lab ID: SD4692-20
Client ID: B185A3-SB1-0305
Project: CTO WE19 NS Newport, Soil
SDG: WE19-6

Sample Date: 28-JUL-10
Received Date: 03-AUG-10
Extract Date: 04-AUG-10
Extracted By: DJP
Extraction Method:
Lab Prep Batch: WG80598

Analysis Date: 04-AUG-10
Analyst: DJP
Analysis Method: SW846 8260B
Matrix: SL
% Solids: 93.
Report Date: 20-AUG-10

Compound	Qualifier	Result	Units	Dilution	LOQ	ADJ LOQ	ADJ MDL	ADJ LOD
1,2-Dibromoethane	U	2.0	ug/Kgdrywt	1	5	4.0	0.95	2.0
2-Hexanone	U	9.9	ug/Kgdrywt	1	25	20.	3.8	9.9
Chlorobenzene	U	2.0	ug/Kgdrywt	1	5	4.0	0.40	2.0
Ethylbenzene	U	2.0	ug/Kgdrywt	1	5	4.0	0.51	2.0
1,1,1,2-Tetrachloroethane	U	2.0	ug/Kgdrywt	1	5	4.0	0.55	2.0
m+p-Xylenes	U	4.0	ug/Kgdrywt	1	10	7.9	1.3	4.0
o-Xylene	U	2.0	ug/Kgdrywt	1	5	4.0	1.0	2.0
Styrene	U	2.0	ug/Kgdrywt	1	5	4.0	0.40	2.0
Bromoform	U	2.0	ug/Kgdrywt	1	5	4.0	0.55	2.0
Isopropylbenzene	U	2.0	ug/Kgdrywt	1	5	4.0	0.73	2.0
Bromobenzene	U	2.0	ug/Kgdrywt	1	5	4.0	0.58	2.0
N-Propylbenzene	U	2.0	ug/Kgdrywt	1	5	4.0	0.66	2.0
1,1,2,2-Tetrachloroethane	U	2.0	ug/Kgdrywt	1	5	4.0	0.66	2.0
1,3,5-Trimethylbenzene	U	2.0	ug/Kgdrywt	1	5	4.0	0.53	2.0
2-Chlorotoluene	U	2.0	ug/Kgdrywt	1	5	4.0	0.87	2.0
1,2,3-Trichloropropane	U	2.0	ug/Kgdrywt	1	5	4.0	0.95	2.0
4-Chlorotoluene	U	2.0	ug/Kgdrywt	1	5	4.0	0.39	2.0
tert-Butylbenzene	U	2.0	ug/Kgdrywt	1	5	4.0	0.71	2.0
1,2,4-Trimethylbenzene	U	2.0	ug/Kgdrywt	1	5	4.0	0.69	2.0
P-Isopropyltoluene	U	2.0	ug/Kgdrywt	1	5	4.0	0.60	2.0
1,3-Dichlorobenzene	U	2.0	ug/Kgdrywt	1	5	4.0	0.49	2.0
1,4-Dichlorobenzene	U	2.0	ug/Kgdrywt	1	5	4.0	0.35	2.0
N-Butylbenzene	U	2.0	ug/Kgdrywt	1	5	4.0	0.73	2.0
sec-Butylbenzene	U	2.0	ug/Kgdrywt	1	5	4.0	0.72	2.0
1,2-Dichlorobenzene	U	2.0	ug/Kgdrywt	1	5	4.0	0.62	2.0
1,2-Dibromo-3-Chloropropane	U	2.0	ug/Kgdrywt	1	5	4.0	1.2	2.0
Hexachlorobutadiene	U	2.0	ug/Kgdrywt	1	5	4.0	0.58	2.0
1,2,4-Trichlorobenzene	U	2.0	ug/Kgdrywt	1	5	4.0	0.62	2.0
1,2,3-Trichlorobenzene	U	2.0	ug/Kgdrywt	1	5	4.0	0.60	2.0
p-Bromofluorobenzene		91.3	%					
Toluene-D8		94.1	%					
1,2-Dichloroethane-D4		110.	%					
Dibromofluoromethane		98.0	%					

600 Technology Way
P.O. Box 540, Scarborough, ME 04070
Tel:(207) 874-2400 Fax:(207) 775-4029

http://www.katahdinlab.com

Report of Analytical Results

Client: Tetra Tech NUS, Inc.
Lab ID: SD4621-1
Client ID: RB-DPT-072910
Project: CTO WE19 NS Newport, Soi
SDG: WE19-6

Sample Date: 29-JUL-10
Received Date: 30-JUL-10
Extract Date: 02-AUG-10
Extracted By: KF
Extraction Method: SW846 3520
Lab Prep Batch: WG80424

Analysis Date: 06-AUG-10
Analyst: JCG
Analysis Method: SW846 8270C
Matrix: AQ
% Solids: NA
Report Date: 26-AUG-10

Compound	Qualifier	Result	Units	Dilution	LOQ	ADJ LOQ	ADJ MDL	ADJ LOD
N-Nitrosodimethylamine	U	7.1	ug/L	1	10	9.5	2.1	7.1
Phenol	U	7.1	ug/L	1	10	9.5	1.7	7.1
Bis(2-Chloroethyl) Ether	U	7.1	ug/L	1	10	9.5	1.9	7.1
2-Chlorophenol	U	7.1	ug/L	1	10	9.5	3.0	7.1
1,3-Dichlorobenzene	U	7.1	ug/L	1	10	9.5	2.0	7.1
1,4-Dichlorobenzene	U	7.1	ug/L	1	10	9.5	2.1	7.1
1,2-Dichlorobenzene	U	7.1	ug/L	1	10	9.5	2.3	7.1
Benzyl Alcohol	U	14.	ug/L	1	20	19.	1.1	14.
2,2'-Oxybis(1-Chloropropane)	U	7.1	ug/L	1	10	9.5	2.0	7.1
2-Methylphenol	U	7.1	ug/L	1	10	9.5	3.6	7.1
Hexachloroethane	U	7.1	ug/L	1	10	9.5	2.2	7.1
N-Nitroso-Di-N-Propylamine	U	7.1	ug/L	1	10	9.5	1.9	7.1
3&4-Methylphenol	U	7.1	ug/L	1	10	9.5	5.3	7.1
Nitrobenzene	U	7.1	ug/L	1	10	9.5	3.0	7.1
Isophorone	U	7.1	ug/L	1	10	9.5	1.6	7.1
2-Nitrophenol	U	7.1	ug/L	1	10	9.5	2.6	7.1
2,4-Dimethylphenol	U	7.1	ug/L	1	10	9.5	4.2	7.1
Bis(2-Chloroethoxy) Methane	U	7.1	ug/L	1	10	9.5	2.0	7.1
2,4-Dichlorophenol	U	7.1	ug/L	1	10	9.5	2.8	7.1
1,2,4-Trichlorobenzene	U	7.1	ug/L	1	10	9.5	2.0	7.1
Benzoic Acid	U	18.	ug/L	1	25	24.	2.8	18.
4-Chloroaniline	U	7.1	ug/L	1	10	9.5	1.8	7.1
Hexachlorobutadiene	U	7.1	ug/L	1	10	9.5	1.7	7.1
4-Chloro-3-Methylphenol	U	7.1	ug/L	1	10	9.5	3.4	7.1
2,4,6-Trichlorophenol	U	7.1	ug/L	1	10	9.5	2.6	7.1
2,4,5-Trichlorophenol	U	18.	ug/L	1	25	24.	3.4	18.
2-Chloronaphthalene	U	7.1	ug/L	1	10	9.5	2.8	7.1
2-Nitroaniline	U	18.	ug/L	1	25	24.	1.7	18.
Dimethyl Phthalate	U	7.1	ug/L	1	10	9.5	1.9	7.1
2,6-Dinitrotoluene	U	7.1	ug/L	1	10	9.5	1.9	7.1
3-Nitroaniline	U	18.	ug/L	1	25	24.	1.4	18.
2,4-Dinitrophenol	U	18.	ug/L	1	25	24.	0.95	18.
Dibenzofuran	U	7.1	ug/L	1	10	9.5	1.5	7.1
4-Nitrophenol	U	18.	ug/L	1	25	24.	1.7	18.
2,4-Dinitrotoluene	U	7.1	ug/L	1	10	9.5	2.1	7.1

600 Technology Way
P.O. Box 540, Scarborough, ME 04070
Tel:(207) 874-2400 Fax:(207) 775-4029

Report of Analytical Results

Client: Tetra Tech NUS, Inc.
Lab ID: SD4621-1
Client ID: RB-DPT-072910
Project: CTO WE19 NS Newport, Soi
SDG: WE19-6

Sample Date: 29-JUL-10
Received Date: 30-JUL-10
Extract Date: 02-AUG-10
Extracted By: KF
Extraction Method: SW846 3520
Lab Prep Batch: WG80424

Analysis Date: 06-AUG-10
Analyst: JCG
Analysis Method: SW846 8270C
Matrix: AQ
% Solids: NA
Report Date: 26-AUG-10

Compound	Qualifier	Result	Units	Dilution	LOQ	ADJ LOQ	ADJ MDL	ADJ LOD
Diethylphthalate	U	7.1	ug/L	1	10	9.5	1.9	7.1
4-Chlorophenyl-Phenylether	U	7.1	ug/L	1	10	9.5	2.1	7.1
4-Nitroaniline	U	18.	ug/L	1	25	24.	1.5	18.
4,6-Dinitro-2-Methylphenol	U	18.	ug/L	1	25	24.	1.9	18.
N-Nitrosodiphenylamine	U	7.1	ug/L	1	10	9.5	3.5	7.1
1,2-Diphenylhydrazine	U	14.	ug/L	1	20	19.	1.9	14.
4-Bromophenyl-Phenylether	U	7.1	ug/L	1	10	9.5	1.8	7.1
Hexachlorobenzene	U	7.1	ug/L	1	10	9.5	2.0	7.1
Pentachlorophenol	U	18.	ug/L	1	25	24.	2.2	18.
Carbazole	U	7.1	ug/L	1	10	9.5	2.0	7.1
Di-N-Butylphthalate	U	7.1	ug/L	1	10	9.5	2.4	7.1
Benzidine	U	36.	ug/L	1	50	48.	15.	36.
Butylbenzylphthalate	U	7.1	ug/L	1	10	9.5	1.8	7.1
3,3'-Dichlorobenzidine	U	18.	ug/L	1	10	9.5	11.	18.
Bis(2-Ethylhexyl) Phthalate	U	7.1	ug/L	1	10	9.5	1.6	7.1
Di-N-Octylphthalate	U	7.1	ug/L	1	10	9.5	1.7	7.1
1,1'-Biphenyl	U	7.1	ug/L	1	10	9.5	2.6	7.1
2,6-Dichlorophenol	U	7.1	ug/L	1	10	9.5	3.8	7.1
N-Nitrosopyrrolidine	U	7.1	ug/L	1	10	9.5	1.2	7.1
2-Fluorophenol		43.6	%					
Phenol-D6		64.2	%					
Nitrobenzene-d5		69.8	%					
2-Fluorobiphenyl		72.2	%					
2,4,6-Tribromophenol		72.2	%					
Terphenyl-d14		94.8	%					

600 Technology Way
P.O. Box 540, Scarborough, ME 04070
Tel:(207) 874-2400 Fax:(207) 775-4029

http://www.katahdinlab.com

Katahdin
ANALYTICAL SERVICES

Accredited in accordance with nelac
Cert No E87604

Report of Analytical Results

Client: Tetra Tech NUS, Inc.
Lab ID: SD4692-1
Client ID: B185A1-SB1-0103
Project: CTO WE19 NS Newport, Soi
SDG: WE19-6

Sample Date: 28-JUL-10
Received Date: 03-AUG-10
Extract Date: 06-AUG-10
Extracted By: WS
Extraction Method: SW846 3550
Lab Prep Batch: WG80603

Analysis Date: 11-AUG-10
Analyst: JCG
Analysis Method: SW846 8270C
Matrix: SL
% Solids: 88.
Report Date: 23-AUG-10

Compound	Qualifier	Result	Units	Dilution	LOQ	ADJ LOQ	ADJ MDL	ADJ LOD
N-Nitrosodimethylamine	U	280	ug/Kgdrywt	1	330	370	97.	280
Phenol	U	280	ug/Kgdrywt	1	330	370	170	280
Bis(2-Chloroethyl) Ether	U	280	ug/Kgdrywt	1	330	370	90.	280
2-Chlorophenol	U	280	ug/Kgdrywt	1	330	370	180	280
1,3-Dichlorobenzene	U	280	ug/Kgdrywt	1	330	370	87.	280
1,4-Dichlorobenzene	U	280	ug/Kgdrywt	1	330	370	96.	280
1,2-Dichlorobenzene	U	280	ug/Kgdrywt	1	330	370	98.	280
Benzyl Alcohol	U	550	ug/Kgdrywt	1	660	740	64.	550
2-Methylphenol	U	280	ug/Kgdrywt	1	330	370	220	280
2,2'-Oxybis(1-Chloropropane)	U	280	ug/Kgdrywt	1	330	370	99.	280
3&4-Methylphenol	U	280	ug/Kgdrywt	1	330	370	210	280
N-Nitroso-Di-N-Propylamine	U	280	ug/Kgdrywt	1	330	370	92.	280
Hexachloroethane	U	280	ug/Kgdrywt	1	330	370	110	280
Nitrobenzene	U	280	ug/Kgdrywt	1	330	370	100	280
Isophorone	U	280	ug/Kgdrywt	1	330	370	84.	280
2-Nitrophenol	U	280	ug/Kgdrywt	1	330	370	190	280
2,4-Dimethylphenol	U	280	ug/Kgdrywt	1	330	370	180	280
Bis(2-Chloroethoxy) Methane	U	280	ug/Kgdrywt	1	330	370	110	280
2,4-Dichlorophenol	U	280	ug/Kgdrywt	1	330	370	170	280
1,2,4-Trichlorobenzene	U	280	ug/Kgdrywt	1	330	370	90.	280
Benzoic Acid	U	680	ug/Kgdrywt	1	820	910	380	680
4-Chloroaniline	U	280	ug/Kgdrywt	1	330	370	130	280
Hexachlorobutadiene	U	280	ug/Kgdrywt	1	330	370	92.	280
4-Chloro-3-Methylphenol	U	280	ug/Kgdrywt	1	330	370	180	280
2,4,6-Trichlorophenol	U	280	ug/Kgdrywt	1	330	370	170	280
2,4,5-Trichlorophenol	U	680	ug/Kgdrywt	1	820	910	170	680
2-Chloronaphthalene	U	280	ug/Kgdrywt	1	330	370	97.	280
2-Nitroaniline	U	680	ug/Kgdrywt	1	820	910	84.	680
Dimethyl Phthalate	U	280	ug/Kgdrywt	1	330	370	87.	280
2,6-Dinitrotoluene	U	280	ug/Kgdrywt	1	330	370	88.	280
3-Nitroaniline	U	680	ug/Kgdrywt	1	820	910	100	680
2,4-Dinitrophenol	U	680	ug/Kgdrywt	1	820	910	420	680
4-Nitrophenol	U	680	ug/Kgdrywt	1	820	910	340	680
Dibenzofuran	U	280	ug/Kgdrywt	1	330	370	88.	280
2,4-Dinitrotoluene	U	280	ug/Kgdrywt	1	330	370	95.	280

600 Technology Way
P.O. Box 540, Scarborough, ME 04070
Tel:(207) 874-2400 Fax:(207) 775-4029

Report of Analytical Results

Client: Tetra Tech NUS, Inc.
Lab ID: SD4692-1
Client ID: B185A1-SB1-0103
Project: CTO WE19 NS Newport, Soi
SDG: WE19-6

Sample Date: 28-JUL-10
Received Date: 03-AUG-10
Extract Date: 06-AUG-10
Extracted By: WS
Extraction Method: SW846 3550
Lab Prep Batch: WG80603

Analysis Date: 11-AUG-10
Analyst: JCG
Analysis Method: SW846 8270C
Matrix: SL
% Solids: 88.
Report Date: 23-AUG-10

Compound	Qualifier	Result	Units	Dilution	LOQ	ADJ LOQ	ADJ MDL	ADJ LOD
Diethylphthalate	U	280	ug/Kgdrywt	1	330	370	89.	280
4-Chlorophenyl-Phenylether	U	280	ug/Kgdrywt	1	330	370	87.	280
4-Nitroaniline	U	680	ug/Kgdrywt	1	820	910	150	680
4,6-Dinitro-2-Methylphenol	U	680	ug/Kgdrywt	1	820	910	380	680
N-Nitrosodiphenylamine	U	280	ug/Kgdrywt	1	330	370	240	280
1,2-Diphenylhydrazine	U	550	ug/Kgdrywt	1	660	740	160	550
4-Bromophenyl-Phenylether	U	280	ug/Kgdrywt	1	330	370	95.	280
Hexachlorobenzene	U	280	ug/Kgdrywt	1	330	370	91.	280
Pentachlorophenol	U	680	ug/Kgdrywt	1	820	910	260	680
Carbazole	U	280	ug/Kgdrywt	1	330	370	120	280
Di-N-Butylphthalate	U	280	ug/Kgdrywt	1	330	370	110	280
Benzidine	U	1200	ug/Kgdrywt	1	1500	1700	110	1200
Butylbenzylphthalate	U	280	ug/Kgdrywt	1	330	370	100	280
3,3'-Dichlorobenzidine	U	280	ug/Kgdrywt	1	330	370	130	280
Bis(2-Ethylhexyl)Phthalate	U	280	ug/Kgdrywt	1	330	370	110	280
Di-N-Octylphthalate	U	280	ug/Kgdrywt	1	330	370	240	280
1,1'-biphenyl	U	280	ug/Kgdrywt	1	330	370	81.	280
2,6-Dichlorophenol	U	280	ug/Kgdrywt	1	330	370	180	280
N-nitrosopyrrolidine	U	280	ug/Kgdrywt	1	330	370	190	280
2-Fluorophenol		59.3	%					
Phenol-D6		66.6	%					
Nitrobenzene-d5		60.8	%					
2-Fluorobiphenyl		65.0	%					
2,4,6-Tribromophenol		67.9	%					
Terphenyl-d14		88.2	%					

600 Technology Way
P.O. Box 540, Scarborough, ME 04070
Tel:(207) 874-2400 Fax:(207) 775-4029

http://www.katahdinlab.com

Katahdin
ANALYTICAL SERVICES

Cert No E87604

Report of Analytical Results

Client: Tetra Tech NUS, Inc.
Lab ID: SD4692-3
Client ID: B185A1-SB1-0708
Project: CTO WE19 NS Newport, Soi
SDG: WE19-6

Sample Date: 28-JUL-10
Received Date: 03-AUG-10
Extract Date: 06-AUG-10
Extracted By: WS
Extraction Method: SW846 3550
Lab Prep Batch: WG80603

Analysis Date: 10-AUG-10
Analyst: JCG
Analysis Method: SW846 8270C
Matrix: SL
% Solids: 93.
Report Date: 23-AUG-10

Compound	Qualifier	Result	Units	Dilution	LOQ	ADJ LOQ	ADJ MDL	ADJ LOD
N-Nitrosodimethylamine	U	260	ug/Kgdrywt	1	330	340	91.	260
Phenol	U	260	ug/Kgdrywt	1	330	340	160	260
Bis(2-Chloroethyl) Ether	U	260	ug/Kgdrywt	1	330	340	84.	260
2-Chlorophenol	U	260	ug/Kgdrywt	1	330	340	170	260
1,3-Dichlorobenzene	U	260	ug/Kgdrywt	1	330	340	81.	260
1,4-Dichlorobenzene	U	260	ug/Kgdrywt	1	330	340	90.	260
1,2-Dichlorobenzene	U	260	ug/Kgdrywt	1	330	340	92.	260
Benzyl Alcohol	U	520	ug/Kgdrywt	1	660	690	59.	520
2-Methylphenol	U	260	ug/Kgdrywt	1	330	340	210	260
2,2'-Oxybis(1-Chloropropane)	U	260	ug/Kgdrywt	1	330	340	93.	260
3&4-Methylphenol	U	260	ug/Kgdrywt	1	330	340	200	260
N-Nitroso-Di-N-Propylamine	U	260	ug/Kgdrywt	1	330	340	86.	260
Hexachloroethane	U	260	ug/Kgdrywt	1	330	340	100	260
Nitrobenzene	U	260	ug/Kgdrywt	1	330	340	95.	260
Isophorone	U	260	ug/Kgdrywt	1	330	340	78.	260
2-Nitrophenol	U	260	ug/Kgdrywt	1	330	340	170	260
2,4-Dimethylphenol	U	260	ug/Kgdrywt	1	330	340	170	260
Bis(2-Chloroethoxy) Methane	U	260	ug/Kgdrywt	1	330	340	100	260
2,4-Dichlorophenol	U	260	ug/Kgdrywt	1	330	340	160	260
1,2,4-Trichlorobenzene	U	260	ug/Kgdrywt	1	330	340	84.	260
Benzoic Acid	U	640	ug/Kgdrywt	1	820	860	360	640
4-Chloroaniline	U	260	ug/Kgdrywt	1	330	340	120	260
Hexachlorobutadiene	U	260	ug/Kgdrywt	1	330	340	86.	260
4-Chloro-3-Methylphenol	U	260	ug/Kgdrywt	1	330	340	170	260
2,4,6-Trichlorophenol	U	260	ug/Kgdrywt	1	330	340	160	260
2,4,5-Trichlorophenol	U	640	ug/Kgdrywt	1	820	860	160	640
2-Chloronaphthalene	U	260	ug/Kgdrywt	1	330	340	91.	260
2-Nitroaniline	U	640	ug/Kgdrywt	1	820	860	78.	640
Dimethyl Phthalate	U	260	ug/Kgdrywt	1	330	340	81.	260
2,6-Dinitrotoluene	U	260	ug/Kgdrywt	1	330	340	82.	260
3-Nitroaniline	U	640	ug/Kgdrywt	1	820	860	98.	640
2,4-Dinitrophenol	U	640	ug/Kgdrywt	1	820	860	390	640
4-Nitrophenol	U	640	ug/Kgdrywt	1	820	860	320	640
Dibenzofuran	U	260	ug/Kgdrywt	1	330	340	82.	260
2,4-Dinitrotoluene	U	260	ug/Kgdrywt	1	330	340	89.	260

600 Technology Way
P.O. Box 540, Scarborough, ME 04070
Tel:(207) 874-2400 Fax:(207) 775-4029

Report of Analytical Results

Client: Tetra Tech NUS, Inc.
Lab ID: SD4692-3
Client ID: B185A1-SB1-0708
Project: CTO WE19 NS Newport, Soi
SDG: WE19-6

Sample Date: 28-JUL-10
Received Date: 03-AUG-10
Extract Date: 06-AUG-10
Extracted By: WS
Extraction Method: SW846 3550
Lab Prep Batch: WG80603

Analysis Date: 10-AUG-10
Analyst: JCG
Analysis Method: SW846 8270C
Matrix: SL
% Solids: 93.
Report Date: 23-AUG-10

Compound	Qualifier	Result	Units	Dilution	LOQ	ADJ LOQ	ADJ MDL	ADJ LOD
Diethylphthalate	U	260	ug/Kgdrywt	1	330	340	83.	260
4-Chlorophenyl-Phenylether	U	260	ug/Kgdrywt	1	330	340	81.	260
4-Nitroaniline	U	640	ug/Kgdrywt	1	820	860	140	640
4,6-Dinitro-2-Methylphenol	U	640	ug/Kgdrywt	1	820	860	350	640
N-Nitrosodiphenylamine	U	260	ug/Kgdrywt	1	330	340	230	260
1,2-Diphenylhydrazine	U	520	ug/Kgdrywt	1	660	690	150	520
4-Bromophenyl-Phenylether	U	260	ug/Kgdrywt	1	330	340	89.	260
Hexachlorobenzene	U	260	ug/Kgdrywt	1	330	340	86.	260
Pentachlorophenol	U	640	ug/Kgdrywt	1	820	860	250	640
Carbazole	U	260	ug/Kgdrywt	1	330	340	120	260
Di-N-Butylphthalate	U	260	ug/Kgdrywt	1	330	340	100	260
Benzidine	U	1200	ug/Kgdrywt	1	1500	1600	100	1200
Butylbenzylphthalate	U	260	ug/Kgdrywt	1	330	340	97.	260
3,3'-Dichlorobenzidine	U	260	ug/Kgdrywt	1	330	340	120	260
Bis(2-Ethylhexyl)Phthalate	U	260	ug/Kgdrywt	1	330	340	100	260
Di-N-Octylphthalate	U	260	ug/Kgdrywt	1	330	340	220	260
1,1'-biphenyl	U	260	ug/Kgdrywt	1	330	340	76.	260
2,6-Dichlorophenol	U	260	ug/Kgdrywt	1	330	340	170	260
N-nitrosopyrrolidine	U	260	ug/Kgdrywt	1	330	340	170	260
2-Fluorophenol		62.4	%					
Phenol-D6		68.4	%					
Nitrobenzene-d5		63.8	%					
2-Fluorobiphenyl		69.0	%					
2,4,6-Tribromophenol		65.8	%					
Terphenyl-d14		83.9	%					

600 Technology Way
P.O. Box 540, Scarborough, ME 04070
Tel:(207) 874-2400 Fax:(207) 775-4029

http://www.katahdinlab.com

Report of Analytical Results

Client: Tetra Tech NUS, Inc.
Lab ID: SD4692-5
Client ID: B185A1-SB2-0103
Project: CTO WE19 NS Newport, Soi
SDG: WE19-6

Sample Date: 28-JUL-10
Received Date: 03-AUG-10
Extract Date: 06-AUG-10
Extracted By: WS
Extraction Method: SW846 3550
Lab Prep Batch: WG80603

Analysis Date: 10-AUG-10
Analyst: JCG
Analysis Method: SW846 8270C
Matrix: SL
% Solids: 86.
Report Date: 23-AUG-10

Compound	Qualifier	Result	Units	Dilution	LOQ	ADJ LOQ	ADJ MDL	ADJ LOD
N-Nitrosodimethylamine	U	280	ug/Kgdrywt	1	330	380	99.	280
Phenol	U	280	ug/Kgdrywt	1	330	380	180	280
Bis(2-Chloroethyl) Ether	U	280	ug/Kgdrywt	1	330	380	92.	280
2-Chlorophenol	U	280	ug/Kgdrywt	1	330	380	190	280
1,3-Dichlorobenzene	U	280	ug/Kgdrywt	1	330	380	89.	280
1,4-Dichlorobenzene	U	280	ug/Kgdrywt	1	330	380	98.	280
1,2-Dichlorobenzene	U	280	ug/Kgdrywt	1	330	380	100	280
Benzyl Alcohol	U	560	ug/Kgdrywt	1	660	750	65.	560
2-Methylphenol	U	280	ug/Kgdrywt	1	330	380	230	280
2,2'-Oxybis(1-Chloropropane)	U	280	ug/Kgdrywt	1	330	380	100	280
3&4-Methylphenol	U	280	ug/Kgdrywt	1	330	380	210	280
N-Nitroso-Di-N-Propylamine	U	280	ug/Kgdrywt	1	330	380	94.	280
Hexachloroethane	U	280	ug/Kgdrywt	1	330	380	110	280
Nitrobenzene	U	280	ug/Kgdrywt	1	330	380	100	280
Isophorone	U	280	ug/Kgdrywt	1	330	380	85.	280
2-Nitrophenol	U	280	ug/Kgdrywt	1	330	380	190	280
2,4-Dimethylphenol	U	280	ug/Kgdrywt	1	330	380	190	280
Bis(2-Chloroethoxy) Methane	U	280	ug/Kgdrywt	1	330	380	110	280
2,4-Dichlorophenol	U	280	ug/Kgdrywt	1	330	380	170	280
1,2,4-Trichlorobenzene	U	280	ug/Kgdrywt	1	330	380	92.	280
Benzoic Acid	U	700	ug/Kgdrywt	1	820	930	390	700
4-Chloroaniline	U	280	ug/Kgdrywt	1	330	380	140	280
Hexachlorobutadiene	U	280	ug/Kgdrywt	1	330	380	94.	280
4-Chloro-3-Methylphenol	U	280	ug/Kgdrywt	1	330	380	190	280
2,4,6-Trichlorophenol	U	280	ug/Kgdrywt	1	330	380	180	280
2,4,5-Trichlorophenol	U	700	ug/Kgdrywt	1	820	930	180	700
2-Chloronaphthalene	U	280	ug/Kgdrywt	1	330	380	99.	280
2-Nitroaniline	J	120	ug/Kgdrywt	1	820	930	85.	700
Dimethyl Phthalate	U	280	ug/Kgdrywt	1	330	380	89.	280
2,6-Dinitrotoluene	U	280	ug/Kgdrywt	1	330	380	90.	280
3-Nitroaniline	U	700	ug/Kgdrywt	1	820	930	110	700
2,4-Dinitrophenol	U	700	ug/Kgdrywt	1	820	930	430	700
4-Nitrophenol	U	700	ug/Kgdrywt	1	820	930	350	700
Dibenzofuran	U	280	ug/Kgdrywt	1	330	380	90.	280
2,4-Dinitrotoluene	U	280	ug/Kgdrywt	1	330	380	97.	280

600 Technology Way
P.O. Box 540, Scarborough, ME 04070
Tel:(207) 874-2400 Fax:(207) 775-4029

Report of Analytical Results

Client: Tetra Tech NUS, Inc.
Lab ID: SD4692-5
Client ID: B185A1-SB2-0103
Project: CTO WE19 NS Newport, Soi
SDG: WE19-6

Sample Date: 28-JUL-10
Received Date: 03-AUG-10
Extract Date: 06-AUG-10
Extracted By: WS
Extraction Method: SW846 3550
Lab Prep Batch: WG80603

Analysis Date: 10-AUG-10
Analyst: JCG
Analysis Method: SW846 8270C
Matrix: SL
% Solids: 86.
Report Date: 23-AUG-10

Compound	Qualifier	Result	Units	Dilution	LOQ	ADJ LOQ	ADJ MDL	ADJ LOD
Diethylphthalate	U	280	ug/Kgdrywt	1	330	380	91.	280
4-Chlorophenyl-Phenylether	U	280	ug/Kgdrywt	1	330	380	89.	280
4-Nitroaniline	U	700	ug/Kgdrywt	1	820	930	150	700
4,6-Dinitro-2-Methylphenol	U	700	ug/Kgdrywt	1	820	930	380	700
N-Nitrosodiphenylamine	U	280	ug/Kgdrywt	1	330	380	250	280
1,2-Diphenylhydrazine	U	560	ug/Kgdrywt	1	660	750	160	560
4-Bromophenyl-Phenylether	U	280	ug/Kgdrywt	1	330	380	97.	280
Hexachlorobenzene	U	280	ug/Kgdrywt	1	330	380	93.	280
Pentachlorophenol	U	700	ug/Kgdrywt	1	820	930	270	700
Carbazole	U	280	ug/Kgdrywt	1	330	380	130	280
Di-N-Butylphthalate	U	280	ug/Kgdrywt	1	330	380	110	280
Benzidine	U	1300	ug/Kgdrywt	1	1500	1700	110	1300
Butylbenzylphthalate	U	280	ug/Kgdrywt	1	330	380	100	280
3,3'-Dichlorobenzidine	U	280	ug/Kgdrywt	1	330	380	130	280
Bis(2-Ethylhexyl)Phthalate	U	280	ug/Kgdrywt	1	330	380	110	280
Di-N-Octylphthalate	U	280	ug/Kgdrywt	1	330	380	240	280
1,1'-biphenyl	U	280	ug/Kgdrywt	1	330	380	83.	280
2,6-Dichlorophenol	U	280	ug/Kgdrywt	1	330	380	190	280
N-nitrosopyrrolidine	U	280	ug/Kgdrywt	1	330	380	190	280
2-Fluorophenol		57.8	%					
Phenol-D6		63.1	%					
Nitrobenzene-d5		58.9	%					
2-Fluorobiphenyl		66.3	%					
2,4,6-Tribromophenol		72.3	%					
Terphenyl-d14		88.4	%					

600 Technology Way
P.O. Box 540, Scarborough, ME 04070
Tel:(207) 874-2400 Fax:(207) 775-4029

Report of Analytical Results

Client: Tetra Tech NUS, Inc.
Lab ID: SD4692-7
Client ID: B185A1-SB2-0305
Project: CTO WE19 NS Newport, Soi
SDG: WE19-6

Sample Date: 28-JUL-10
Received Date: 03-AUG-10
Extract Date: 06-AUG-10
Extracted By: WS
Extraction Method: SW846 3550
Lab Prep Batch: WG80603

Analysis Date: 10-AUG-10
Analyst: JCG
Analysis Method: SW846 8270C
Matrix: SL
% Solids: 85.
Report Date: 23-AUG-10

Compound	Qualifier	Result	Units	Dilution	LOQ	ADJ LOQ	ADJ MDL	ADJ LOD
N-Nitrosodimethylamine	U	290	ug/Kgdrywt	1	330	380	100	290
Phenol	U	290	ug/Kgdrywt	1	330	380	180	290
Bis(2-Chloroethyl) Ether	U	290	ug/Kgdrywt	1	330	380	94.	290
2-Chlorophenol	U	290	ug/Kgdrywt	1	330	380	190	290
1,3-Dichlorobenzene	U	290	ug/Kgdrywt	1	330	380	90.	290
1,4-Dichlorobenzene	U	290	ug/Kgdrywt	1	330	380	99.	290
1,2-Dichlorobenzene	U	290	ug/Kgdrywt	1	330	380	100	290
Benzyl Alcohol	U	570	ug/Kgdrywt	1	660	760	66.	570
2-Methylphenol	U	290	ug/Kgdrywt	1	330	380	230	290
2,2'-Oxybis(1-Chloropropane)	U	290	ug/Kgdrywt	1	330	380	100	290
3&4-Methylphenol	U	290	ug/Kgdrywt	1	330	380	220	290
N-Nitroso-Di-N-Propylamine	U	290	ug/Kgdrywt	1	330	380	96.	290
Hexachloroethane	U	290	ug/Kgdrywt	1	330	380	110	290
Nitrobenzene	U	290	ug/Kgdrywt	1	330	380	100	290
Isophorone	U	290	ug/Kgdrywt	1	330	380	87.	290
2-Nitrophenol	U	290	ug/Kgdrywt	1	330	380	190	290
2,4-Dimethylphenol	U	290	ug/Kgdrywt	1	330	380	190	290
Bis(2-Chloroethoxy) Methane	U	290	ug/Kgdrywt	1	330	380	110	290
2,4-Dichlorophenol	U	290	ug/Kgdrywt	1	330	380	170	290
1,2,4-Trichlorobenzene	U	290	ug/Kgdrywt	1	330	380	94.	290
Benzoic Acid	U	710	ug/Kgdrywt	1	820	950	400	710
4-Chloroaniline	U	290	ug/Kgdrywt	1	330	380	140	290
Hexachlorobutadiene	U	290	ug/Kgdrywt	1	330	380	96.	290
4-Chloro-3-Methylphenol	U	290	ug/Kgdrywt	1	330	380	190	290
2,4,6-Trichlorophenol	U	290	ug/Kgdrywt	1	330	380	180	290
2,4,5-Trichlorophenol	U	710	ug/Kgdrywt	1	820	950	180	710
2-Chloronaphthalene	U	290	ug/Kgdrywt	1	330	380	100	290
2-Nitroaniline	U	710	ug/Kgdrywt	1	820	950	87.	710
Dimethyl Phthalate	U	290	ug/Kgdrywt	1	330	380	90.	290
2,6-Dinitrotoluene	U	290	ug/Kgdrywt	1	330	380	91.	290
3-Nitroaniline	U	710	ug/Kgdrywt	1	820	950	110	710
2,4-Dinitrophenol	U	710	ug/Kgdrywt	1	820	950	440	710
4-Nitrophenol	U	710	ug/Kgdrywt	1	820	950	360	710
Dibenzofuran	U	290	ug/Kgdrywt	1	330	380	91.	290
2,4-Dinitrotoluene	U	290	ug/Kgdrywt	1	330	380	98.	290

600 Technology Way
P.O. Box 540, Scarborough, ME 04070
Tel:(207) 874-2400 Fax:(207) 775-4029

Report of Analytical Results

Client: Tetra Tech NUS, Inc.
Lab ID: SD4692-7
Client ID: B185A1-SB2-0305
Project: CTO WE19 NS Newport, Soi
SDG: WE19-6

Sample Date: 28-JUL-10
Received Date: 03-AUG-10
Extract Date: 06-AUG-10
Extracted By: WS
Extraction Method: SW846 3550
Lab Prep Batch: WG80603

Analysis Date: 10-AUG-10
Analyst: JCG
Analysis Method: SW846 8270C
Matrix: SL
% Solids: 85.
Report Date: 23-AUG-10

Compound	Qualifier	Result	Units	Dilution	LOQ	ADJ LOQ	ADJ MDL	ADJ LOD
Diethylphthalate	U	290	ug/Kgdrywt	1	330	380	92.	290
4-Chlorophenyl-Phenylether	U	290	ug/Kgdrywt	1	330	380	90.	290
4-Nitroaniline	U	710	ug/Kgdrywt	1	820	950	150	710
4,6-Dinitro-2-Methylphenol	U	710	ug/Kgdrywt	1	820	950	390	710
N-Nitrosodiphenylamine	U	290	ug/Kgdrywt	1	330	380	250	290
1,2-Diphenylhydrazine	U	570	ug/Kgdrywt	1	660	760	160	570
4-Bromophenyl-Phenylether	U	290	ug/Kgdrywt	1	330	380	98.	290
Hexachlorobenzene	U	290	ug/Kgdrywt	1	330	380	95.	290
Pentachlorophenol	U	710	ug/Kgdrywt	1	820	950	270	710
Carbazole	U	290	ug/Kgdrywt	1	330	380	130	290
Di-N-Butylphthalate	U	290	ug/Kgdrywt	1	330	380	120	290
Benzidine	U	1300	ug/Kgdrywt	1	1500	1700	120	1300
Butylbenzylphthalate	U	290	ug/Kgdrywt	1	330	380	110	290
3,3'-Dichlorobenzidine	U	290	ug/Kgdrywt	1	330	380	130	290
Bis(2-Ethylhexyl)Phthalate	U	290	ug/Kgdrywt	1	330	380	110	290
Di-N-Octylphthalate	U	290	ug/Kgdrywt	1	330	380	240	290
1,1'-biphenyl	U	290	ug/Kgdrywt	1	330	380	84.	290
2,6-Dichlorophenol	U	290	ug/Kgdrywt	1	330	380	190	290
N-nitrosopyrrolidine	U	290	ug/Kgdrywt	1	330	380	190	290
2-Fluorophenol		54.8	%					
Phenol-D6		60.8	%					
Nitrobenzene-d5		52.8	%					
2-Fluorobiphenyl		63.7	%					
2,4,6-Tribromophenol		68.8	%					
Terphenyl-d14		83.4	%					

600 Technology Way
P.O. Box 540, Scarborough, ME 04070
Tel:(207) 874-2400 Fax:(207) 775-4029

http://www.katahdinlab.com

Report of Analytical Results

Client: Tetra Tech NUS, Inc.
Lab ID: SD4692-9
Client ID: B185A1-SB3-0103
Project: CTO WE19 NS Newport, Soi
SDG: WE19-6

Sample Date: 28-JUL-10
Received Date: 03-AUG-10
Extract Date: 06-AUG-10
Extracted By: WS
Extraction Method: SW846 3550
Lab Prep Batch: WG80603

Analysis Date: 11-AUG-10
Analyst: JCG
Analysis Method: SW846 8270C
Matrix: SL
% Solids: 86.
Report Date: 23-AUG-10

Compound	Qualifier	Result	Units	Dilution	LOQ	ADJ LOQ	ADJ MDL	ADJ LOD
N-Nitrosodimethylamine	U	280	ug/Kgdrywt	1	330	380	99.	280
Phenol	U	280	ug/Kgdrywt	1	330	380	180	280
Bis(2-Chloroethyl) Ether	U	280	ug/Kgdrywt	1	330	380	92.	280
2-Chlorophenol	U	280	ug/Kgdrywt	1	330	380	190	280
1,3-Dichlorobenzene	U	280	ug/Kgdrywt	1	330	380	89.	280
1,4-Dichlorobenzene	U	280	ug/Kgdrywt	1	330	380	98.	280
1,2-Dichlorobenzene	U	280	ug/Kgdrywt	1	330	380	100	280
Benzyl Alcohol	U	560	ug/Kgdrywt	1	660	750	65.	560
2-Methylphenol	U	280	ug/Kgdrywt	1	330	380	230	280
2,2'-Oxybis(1-Chloropropane)	U	280	ug/Kgdrywt	1	330	380	100	280
3&4-Methylphenol	U	280	ug/Kgdrywt	1	330	380	210	280
N-Nitroso-Di-N-Propylamine	U	280	ug/Kgdrywt	1	330	380	95.	280
Hexachloroethane	U	280	ug/Kgdrywt	1	330	380	110	280
Nitrobenzene	U	280	ug/Kgdrywt	1	330	380	100	280
Isophorone	U	280	ug/Kgdrywt	1	330	380	86.	280
2-Nitrophenol	U	280	ug/Kgdrywt	1	330	380	190	280
2,4-Dimethylphenol	U	280	ug/Kgdrywt	1	330	380	190	280
Bis(2-Chloroethoxy) Methane	U	280	ug/Kgdrywt	1	330	380	110	280
2,4-Dichlorophenol	U	280	ug/Kgdrywt	1	330	380	170	280
1,2,4-Trichlorobenzene	U	280	ug/Kgdrywt	1	330	380	92.	280
Benzoic Acid	U	700	ug/Kgdrywt	1	820	940	390	700
4-Chloroaniline	U	280	ug/Kgdrywt	1	330	380	140	280
Hexachlorobutadiene	U	280	ug/Kgdrywt	1	330	380	95.	280
4-Chloro-3-Methylphenol	U	280	ug/Kgdrywt	1	330	380	190	280
2,4,6-Trichlorophenol	U	280	ug/Kgdrywt	1	330	380	180	280
2,4,5-Trichlorophenol	U	700	ug/Kgdrywt	1	820	940	180	700
2-Chloronaphthalene	U	280	ug/Kgdrywt	1	330	380	99.	280
2-Nitroaniline	U	700	ug/Kgdrywt	1	820	940	86.	700
Dimethyl Phthalate	U	280	ug/Kgdrywt	1	330	380	89.	280
2,6-Dinitrotoluene	U	280	ug/Kgdrywt	1	330	380	90.	280
3-Nitroaniline	U	700	ug/Kgdrywt	1	820	940	110	700
2,4-Dinitrophenol	U	700	ug/Kgdrywt	1	820	940	430	700
4-Nitrophenol	U	700	ug/Kgdrywt	1	820	940	350	700
Dibenzofuran	U	280	ug/Kgdrywt	1	330	380	90.	280
2,4-Dinitrotoluene	U	280	ug/Kgdrywt	1	330	380	97.	280

600 Technology Way
P.O. Box 540, Scarborough, ME 04070
Tel:(207) 874-2400 Fax:(207) 775-4029

Report of Analytical Results

Client: Tetra Tech NUS, Inc.
Lab ID: SD4692-9
Client ID: B185A1-SB3-0103
Project: CTO WE19 NS Newport, Soil
SDG: WE19-6

Sample Date: 28-JUL-10
Received Date: 03-AUG-10
Extract Date: 06-AUG-10
Extracted By: WS
Extraction Method: SW846 3550
Lab Prep Batch: WG80603

Analysis Date: 11-AUG-10
Analyst: JCG
Analysis Method: SW846 8270C
Matrix: SL
% Solids: 86.
Report Date: 23-AUG-10

Compound	Qualifier	Result	Units	Dilution	LOQ	ADJ LOQ	ADJ MDL	ADJ LOD
Diethylphthalate	U	280	ug/Kgdrywt	1	330	380	91.	280
4-Chlorophenyl-Phenylether	U	280	ug/Kgdrywt	1	330	380	89.	280
4-Nitroaniline	U	700	ug/Kgdrywt	1	820	940	150	700
4,6-Dinitro-2-Methylphenol	U	700	ug/Kgdrywt	1	820	940	380	700
N-Nitrosodiphenylamine	U	280	ug/Kgdrywt	1	330	380	250	280
1,2-Diphenylhydrazine	U	560	ug/Kgdrywt	1	660	750	160	560
4-Bromophenyl-Phenylether	U	280	ug/Kgdrywt	1	330	380	97.	280
Hexachlorobenzene	U	280	ug/Kgdrywt	1	330	380	94.	280
Pentachlorophenol	U	700	ug/Kgdrywt	1	820	940	270	700
Carbazole	U	280	ug/Kgdrywt	1	330	380	130	280
Di-N-Butylphthalate	U	280	ug/Kgdrywt	1	330	380	120	280
Benzidine	U	1300	ug/Kgdrywt	1	1500	1700	110	1300
Butylbenzylphthalate	U	280	ug/Kgdrywt	1	330	380	110	280
3,3'-Dichlorobenzidine	U	280	ug/Kgdrywt	1	330	380	130	280
Bis(2-Ethylhexyl)Phthalate	U	280	ug/Kgdrywt	1	330	380	110	280
Di-N-Octylphthalate	U	280	ug/Kgdrywt	1	330	380	240	280
1,1'-biphenyl	U	280	ug/Kgdrywt	1	330	380	83.	280
2,6-Dichlorophenol	U	280	ug/Kgdrywt	1	330	380	190	280
N-nitrosopyrrolidine	U	280	ug/Kgdrywt	1	330	380	190	280
2-Fluorophenol		59.0	%					
Phenol-D6		66.7	%					
Nitrobenzene-d5		59.5	%					
2-Fluorobiphenyl		66.3	%					
2,4,6-Tribromophenol		66.9	%					
Terphenyl-d14		85.3	%					

600 Technology Way
P.O. Box 540, Scarborough, ME 04070
Tel:(207) 874-2400 Fax:(207) 775-4029

Katahdin
ANALYTICAL SERVICES

Cert No E87604

Report of Analytical Results

Client: Tetra Tech NUS, Inc.
Lab ID: SD4692-11
Client ID: B185A1-SB3-0305
Project: CTO WE19 NS Newport, Soi
SDG: WE19-6

Sample Date: 28-JUL-10
Received Date: 03-AUG-10
Extract Date: 06-AUG-10
Extracted By: WS
Extraction Method: SW846 3550
Lab Prep Batch: WG80603

Analysis Date: 11-AUG-10
Analyst: JCG
Analysis Method: SW846 8270C
Matrix: SL
% Solids: 82.
Report Date: 23-AUG-10

Compound	Qualifier	Result	Units	Dilution	LOQ	ADJ LOQ	ADJ MDL	ADJ LOD
N-Nitrosodimethylamine	U	290	ug/Kgdrywt	1	330	390	100	290
Phenol	U	290	ug/Kgdrywt	1	330	390	180	290
Bis(2-Chloroethyl) Ether	U	290	ug/Kgdrywt	1	330	390	95.	290
2-Chlorophenol	U	290	ug/Kgdrywt	1	330	390	190	290
1,3-Dichlorobenzene	U	290	ug/Kgdrywt	1	330	390	92.	290
1,4-Dichlorobenzene	U	290	ug/Kgdrywt	1	330	390	100	290
1,2-Dichlorobenzene	U	290	ug/Kgdrywt	1	330	390	100	290
Benzyl Alcohol	U	580	ug/Kgdrywt	1	660	780	67.	580
2-Methylphenol	U	290	ug/Kgdrywt	1	330	390	240	290
2,2'-Oxybis(1-Chloropropane)	U	290	ug/Kgdrywt	1	330	390	100	290
3&4-Methylphenol	U	290	ug/Kgdrywt	1	330	390	220	290
N-Nitroso-Di-N-Propylamine	U	290	ug/Kgdrywt	1	330	390	98.	290
Hexachloroethane	U	290	ug/Kgdrywt	1	330	390	110	290
Nitrobenzene	U	290	ug/Kgdrywt	1	330	390	110	290
Isophorone	U	290	ug/Kgdrywt	1	330	390	88.	290
2-Nitrophenol	U	290	ug/Kgdrywt	1	330	390	200	290
2,4-Dimethylphenol	U	290	ug/Kgdrywt	1	330	390	190	290
Bis(2-Chloroethoxy) Methane	U	290	ug/Kgdrywt	1	330	390	110	290
2,4-Dichlorophenol	U	290	ug/Kgdrywt	1	330	390	180	290
1,2,4-Trichlorobenzene	U	290	ug/Kgdrywt	1	330	390	95.	290
Benzoic Acid	U	720	ug/Kgdrywt	1	820	960	400	720
4-Chloroaniline	U	290	ug/Kgdrywt	1	330	390	140	290
Hexachlorobutadiene	U	290	ug/Kgdrywt	1	330	390	98.	290
4-Chloro-3-Methylphenol	U	290	ug/Kgdrywt	1	330	390	200	290
2,4,6-Trichlorophenol	U	290	ug/Kgdrywt	1	330	390	180	290
2,4,5-Trichlorophenol	U	720	ug/Kgdrywt	1	820	960	180	720
2-Chloronaphthalene	U	290	ug/Kgdrywt	1	330	390	100	290
2-Nitroaniline	U	720	ug/Kgdrywt	1	820	960	88.	720
Dimethyl Phthalate	U	290	ug/Kgdrywt	1	330	390	92.	290
2,6-Dinitrotoluene	U	290	ug/Kgdrywt	1	330	390	93.	290
3-Nitroaniline	U	720	ug/Kgdrywt	1	820	960	110	720
2,4-Dinitrophenol	U	720	ug/Kgdrywt	1	820	960	440	720
4-Nitrophenol	U	720	ug/Kgdrywt	1	820	960	360	720
Dibenzofuran	U	290	ug/Kgdrywt	1	330	390	93.	290
2,4-Dinitrotoluene	U	290	ug/Kgdrywt	1	330	390	100	290

600 Technology Way
P.O. Box 540, Scarborough, ME 04070
Tel:(207) 874-2400 Fax:(207) 775-4029

Report of Analytical Results

Client: Tetra Tech NUS, Inc.
Lab ID: SD4692-11
Client ID: B185A1-SB3-0305
Project: CTO WE19 NS Newport, Soi
SDG: WE19-6

Sample Date: 28-JUL-10
Received Date: 03-AUG-10
Extract Date: 06-AUG-10
Extracted By: WS
Extraction Method: SW846 3550
Lab Prep Batch: WG80603

Analysis Date: 11-AUG-10
Analyst: JCG
Analysis Method: SW846 8270C
Matrix: SL
% Solids: 82.
Report Date: 23-AUG-10

Compound	Qualifier	Result	Units	Dilution	LOQ	ADJ LOQ	ADJ MDL	ADJ LOD
Diethylphthalate	U	290	ug/Kgdrywt	1	330	390	94.	290
4-Chlorophenyl-Phenylether	U	290	ug/Kgdrywt	1	330	390	92.	290
4-Nitroaniline	U	720	ug/Kgdrywt	1	820	960	160	720
4,6-Dinitro-2-Methylphenol	U	720	ug/Kgdrywt	1	820	960	400	720
N-Nitrosodiphenylamine	U	290	ug/Kgdrywt	1	330	390	260	290
1,2-Diphenylhydrazine	U	580	ug/Kgdrywt	1	660	780	170	580
4-Bromophenyl-Phenylether	U	290	ug/Kgdrywt	1	330	390	100	290
Hexachlorobenzene	U	290	ug/Kgdrywt	1	330	390	96.	290
Pentachlorophenol	U	720	ug/Kgdrywt	1	820	960	280	720
Carbazole	U	290	ug/Kgdrywt	1	330	390	130	290
Di-N-Butylphthalate	U	290	ug/Kgdrywt	1	330	390	120	290
Benzidine	U	1300	ug/Kgdrywt	1	1500	1800	120	1300
Butylbenzylphthalate	U	290	ug/Kgdrywt	1	330	390	110	290
3,3'-Dichlorobenzidine	U	290	ug/Kgdrywt	1	330	390	130	290
Bis(2-Ethylhexyl)Phthalate	U	290	ug/Kgdrywt	1	330	390	120	290
Di-N-Octylphthalate	U	290	ug/Kgdrywt	1	330	390	250	290
1,1'-biphenyl	U	290	ug/Kgdrywt	1	330	390	86.	290
2,6-Dichlorophenol	U	290	ug/Kgdrywt	1	330	390	190	290
N-nitrosopyrrolidine	U	290	ug/Kgdrywt	1	330	390	200	290
2-Fluorophenol		58.9	%					
Phenol-D6		63.8	%					
Nitrobenzene-d5		73.0	%					
2-Fluorobiphenyl		60.2	%					
2,4,6-Tribromophenol		60.7	%					
Terphenyl-d14		75.5	%					

600 Technology Way
P.O. Box 540, Scarborough, ME 04070
Tel:(207) 874-2400 Fax:(207) 775-4029

http://www.katahdinlab.com

Katahdin
ANALYTICAL SERVICES

Accredited in accordance with nelac
Cert No E87604

Report of Analytical Results

Client: Tetra Tech NUS, Inc.
Lab ID: SD4692-13
Client ID: B185A1-SB4-0103
Project: CTO WE19 NS Newport, Soil
SDG: WE19-6

Sample Date: 28-JUL-10
Received Date: 03-AUG-10
Extract Date: 06-AUG-10
Extracted By: WS
Extraction Method: SW846 3550
Lab Prep Batch: WG80603

Analysis Date: 11-AUG-10
Analyst: JCG
Analysis Method: SW846 8270C
Matrix: SL
% Solids: 83.
Report Date: 23-AUG-10

Compound	Qualifier	Result	Units	Dilution	LOQ	ADJ LOQ	ADJ MDL	ADJ LOD
N-Nitrosodimethylamine	U	290	ug/Kgdrywt	1	330	390	100	290
Phenol	U	290	ug/Kgdrywt	1	330	390	180	290
Bis(2-Chloroethyl) Ether	U	290	ug/Kgdrywt	1	330	390	96.	290
2-Chlorophenol	U	290	ug/Kgdrywt	1	330	390	190	290
1,3-Dichlorobenzene	U	290	ug/Kgdrywt	1	330	390	92.	290
1,4-Dichlorobenzene	U	290	ug/Kgdrywt	1	330	390	100	290
1,2-Dichlorobenzene	U	290	ug/Kgdrywt	1	330	390	100	290
Benzyl Alcohol	U	590	ug/Kgdrywt	1	660	780	67.	590
2-Methylphenol	U	290	ug/Kgdrywt	1	330	390	240	290
2,2'-Oxybis(1-Chloropropane)	U	290	ug/Kgdrywt	1	330	390	100	290
3&4-Methylphenol	U	290	ug/Kgdrywt	1	330	390	220	290
N-Nitroso-Di-N-Propylamine	U	290	ug/Kgdrywt	1	330	390	98.	290
Hexachloroethane	U	290	ug/Kgdrywt	1	330	390	110	290
Nitrobenzene	U	290	ug/Kgdrywt	1	330	390	110	290
Isophorone	U	290	ug/Kgdrywt	1	330	390	89.	290
2-Nitrophenol	U	290	ug/Kgdrywt	1	330	390	200	290
2,4-Dimethylphenol	U	290	ug/Kgdrywt	1	330	390	200	290
Bis(2-Chloroethoxy) Methane	U	290	ug/Kgdrywt	1	330	390	110	290
2,4-Dichlorophenol	U	290	ug/Kgdrywt	1	330	390	180	290
1,2,4-Trichlorobenzene	U	290	ug/Kgdrywt	1	330	390	96.	290
Benzoic Acid	U	730	ug/Kgdrywt	1	820	970	410	730
4-Chloroaniline	U	290	ug/Kgdrywt	1	330	390	140	290
Hexachlorobutadiene	U	290	ug/Kgdrywt	1	330	390	98.	290
4-Chloro-3-Methylphenol	U	290	ug/Kgdrywt	1	330	390	200	290
2,4,6-Trichlorophenol	U	290	ug/Kgdrywt	1	330	390	180	290
2,4,5-Trichlorophenol	U	730	ug/Kgdrywt	1	820	970	180	730
2-Chloronaphthalene	U	290	ug/Kgdrywt	1	330	390	100	290
2-Nitroaniline	U	730	ug/Kgdrywt	1	820	970	89.	730
Dimethyl Phthalate	U	290	ug/Kgdrywt	1	330	390	92.	290
2,6-Dinitrotoluene	U	290	ug/Kgdrywt	1	330	390	94.	290
3-Nitroaniline	U	730	ug/Kgdrywt	1	820	970	110	730
2,4-Dinitrophenol	U	730	ug/Kgdrywt	1	820	970	450	730
4-Nitrophenol	U	730	ug/Kgdrywt	1	820	970	360	730
Dibenzofuran	U	290	ug/Kgdrywt	1	330	390	94.	290
2,4-Dinitrotoluene	U	290	ug/Kgdrywt	1	330	390	100	290

600 Technology Way
P.O. Box 540, Scarborough, ME 04070
Tel:(207) 874-2400 Fax:(207) 775-4029

Report of Analytical Results

Client: Tetra Tech NUS, Inc.
Lab ID: SD4692-13
Client ID: B185A1-SB4-0103
Project: CTO WE19 NS Newport, Soi
SDG: WE19-6

Sample Date: 28-JUL-10
Received Date: 03-AUG-10
Extract Date: 06-AUG-10
Extracted By: WS
Extraction Method: SW846 3550
Lab Prep Batch: WG80603

Analysis Date: 11-AUG-10
Analyst: JCG
Analysis Method: SW846 8270C
Matrix: SL
% Solids: 83.
Report Date: 23-AUG-10

Compound	Qualifier	Result	Units	Dilution	LOQ	ADJ LOQ	ADJ MDL	ADJ LOD
Diethylphthalate	U	290	ug/Kgdrywt	1	330	390	95.	290
4-Chlorophenyl-Phenylether	U	290	ug/Kgdrywt	1	330	390	92.	290
4-Nitroaniline	U	730	ug/Kgdrywt	1	820	970	160	730
4,6-Dinitro-2-Methylphenol	U	730	ug/Kgdrywt	1	820	970	400	730
N-Nitrosodiphenylamine	U	290	ug/Kgdrywt	1	330	390	260	290
1,2-Diphenylhydrazine	U	590	ug/Kgdrywt	1	660	780	170	590
4-Bromophenyl-Phenylether	U	290	ug/Kgdrywt	1	330	390	100	290
Hexachlorobenzene	U	290	ug/Kgdrywt	1	330	390	97.	290
Pentachlorophenol	U	730	ug/Kgdrywt	1	820	970	280	730
Carbazole	U	290	ug/Kgdrywt	1	330	390	130	290
Di-N-Butylphthalate	U	290	ug/Kgdrywt	1	330	390	120	290
Benzidine	U	1300	ug/Kgdrywt	1	1500	1800	120	1300
Butylbenzylphthalate	U	290	ug/Kgdrywt	1	330	390	110	290
3,3'-Dichlorobenzidine	U	290	ug/Kgdrywt	1	330	390	130	290
Bis(2-Ethylhexyl)Phthalate	U	290	ug/Kgdrywt	1	330	390	120	290
Di-N-Octylphthalate	U	290	ug/Kgdrywt	1	330	390	250	290
1,1'-biphenyl	U	290	ug/Kgdrywt	1	330	390	86.	290
2,6-Dichlorophenol	U	290	ug/Kgdrywt	1	330	390	200	290
N-nitrosopyrrolidine	U	290	ug/Kgdrywt	1	330	390	200	290
2-Fluorophenol		57.7	%					
Phenol-D6		65.8	%					
Nitrobenzene-d5		58.4	%					
2-Fluorobiphenyl		64.5	%					
2,4,6-Tribromophenol		66.6	%					
Terphenyl-d14		84.8	%					

600 Technology Way
P.O. Box 540, Scarborough, ME 04070
Tel:(207) 874-2400 Fax:(207) 775-4029

http://www.katahdinlab.com

Katahdin
ANALYTICAL SERVICES

Cert No E87604

Report of Analytical Results

Client: Tetra Tech NUS, Inc.
Lab ID: SD4692-15
Client ID: B185A1-SB4-0507
Project: CTO WE19 NS Newport, Soi
SDG: WE19-6

Sample Date: 28-JUL-10
Received Date: 03-AUG-10
Extract Date: 06-AUG-10
Extracted By: WS
Extraction Method: SW846 3550
Lab Prep Batch: WG80603

Analysis Date: 10-AUG-10
Analyst: JCG
Analysis Method: SW846 8270C
Matrix: SL
% Solids: 76.
Report Date: 23-AUG-10

Compound	Qualifier	Result	Units	Dilution	LOQ	ADJ LOQ	ADJ MDL	ADJ LOD
N-Nitrosodimethylamine	U	320	ug/Kgdrywt	1	330	420	110	320
Phenol	U	320	ug/Kgdrywt	1	330	420	200	320
Bis(2-Chloroethyl) Ether	U	320	ug/Kgdrywt	1	330	420	100	320
2-Chlorophenol	U	320	ug/Kgdrywt	1	330	420	210	320
1,3-Dichlorobenzene	U	320	ug/Kgdrywt	1	330	420	100	320
1,4-Dichlorobenzene	U	320	ug/Kgdrywt	1	330	420	110	320
1,2-Dichlorobenzene	U	320	ug/Kgdrywt	1	330	420	110	320
Benzyl Alcohol	U	630	ug/Kgdrywt	1	660	840	73.	630
2-Methylphenol	U	320	ug/Kgdrywt	1	330	420	260	320
2,2'-Oxybis(1-Chloropropane)	U	320	ug/Kgdrywt	1	330	420	110	320
3&4-Methylphenol	U	320	ug/Kgdrywt	1	330	420	240	320
N-Nitroso-Di-N-Propylamine	U	320	ug/Kgdrywt	1	330	420	110	320
Hexachloroethane	U	320	ug/Kgdrywt	1	330	420	120	320
Nitrobenzene	U	320	ug/Kgdrywt	1	330	420	120	320
Isophorone	U	320	ug/Kgdrywt	1	330	420	96.	320
2-Nitrophenol	U	320	ug/Kgdrywt	1	330	420	210	320
2,4-Dimethylphenol	U	320	ug/Kgdrywt	1	330	420	210	320
Bis(2-Chloroethoxy) Methane	U	320	ug/Kgdrywt	1	330	420	120	320
2,4-Dichlorophenol	U	320	ug/Kgdrywt	1	330	420	190	320
1,2,4-Trichlorobenzene	U	320	ug/Kgdrywt	1	330	420	100	320
Benzoic Acid	U	790	ug/Kgdrywt	1	820	1000	440	790
4-Chloroaniline	U	320	ug/Kgdrywt	1	330	420	150	320
Hexachlorobutadiene	U	320	ug/Kgdrywt	1	330	420	110	320
4-Chloro-3-Methylphenol	U	320	ug/Kgdrywt	1	330	420	210	320
2,4,6-Trichlorophenol	U	320	ug/Kgdrywt	1	330	420	200	320
2,4,5-Trichlorophenol	U	790	ug/Kgdrywt	1	820	1000	200	790
2-Chloronaphthalene	U	320	ug/Kgdrywt	1	330	420	110	320
2-Nitroaniline	U	790	ug/Kgdrywt	1	820	1000	96.	790
Dimethyl Phthalate	U	320	ug/Kgdrywt	1	330	420	100	320
2,6-Dinitrotoluene	U	320	ug/Kgdrywt	1	330	420	100	320
3-Nitroaniline	U	790	ug/Kgdrywt	1	820	1000	120	790
2,4-Dinitrophenol	U	790	ug/Kgdrywt	1	820	1000	480	790
4-Nitrophenol	U	790	ug/Kgdrywt	1	820	1000	400	790
Dibenzofuran	U	320	ug/Kgdrywt	1	330	420	100	320
2,4-Dinitrotoluene	U	320	ug/Kgdrywt	1	330	420	110	320

600 Technology Way
P.O. Box 540, Scarborough, ME 04070
Tel:(207) 874-2400 Fax:(207) 775-4029

Report of Analytical Results

Client: Tetra Tech NUS, Inc.
Lab ID: SD4692-15
Client ID: B185A1-SB4-0507
Project: CTO WE19 NS Newport, Soi
SDG: WE19-6

Sample Date: 28-JUL-10
Received Date: 03-AUG-10
Extract Date: 06-AUG-10
Extracted By: WS
Extraction Method: SW846 3550
Lab Prep Batch: WG80603

Analysis Date: 10-AUG-10
Analyst: JCG
Analysis Method: SW846 8270C
Matrix: SL
% Solids: 76.
Report Date: 23-AUG-10

Compound	Qualifier	Result	Units	Dilution	LOQ	ADJ LOQ	ADJ MDL	ADJ LOD
Diethylphthalate	U	320	ug/Kgdrywt	1	330	420	100	320
4-Chlorophenyl-Phenylether	U	320	ug/Kgdrywt	1	330	420	100	320
4-Nitroaniline	U	790	ug/Kgdrywt	1	820	1000	170	790
4,6-Dinitro-2-Methylphenol	U	790	ug/Kgdrywt	1	820	1000	430	790
N-Nitrosodiphenylamine	U	320	ug/Kgdrywt	1	330	420	280	320
1,2-Diphenylhydrazine	U	630	ug/Kgdrywt	1	660	840	180	630
4-Bromophenyl-Phenylether	U	320	ug/Kgdrywt	1	330	420	110	320
Hexachlorobenzene	U	320	ug/Kgdrywt	1	330	420	100	320
Pentachlorophenol	U	790	ug/Kgdrywt	1	820	1000	300	790
Carbazole	U	320	ug/Kgdrywt	1	330	420	140	320
Di-N-Butylphthalate	U	320	ug/Kgdrywt	1	330	420	130	320
Benzidine	U	1400	ug/Kgdrywt	1	1500	1900	130	1400
Butylbenzylphthalate	U	320	ug/Kgdrywt	1	330	420	120	320
3,3'-Dichlorobenzidine	U	320	ug/Kgdrywt	1	330	420	140	320
Bis(2-Ethylhexyl)Phthalate	U	320	ug/Kgdrywt	1	330	420	120	320
Di-N-Octylphthalate	U	320	ug/Kgdrywt	1	330	420	270	320
1,1'-biphenyl	U	320	ug/Kgdrywt	1	330	420	93.	320
2,6-Dichlorophenol	U	320	ug/Kgdrywt	1	330	420	210	320
N-nitrosopyrrolidine	U	320	ug/Kgdrywt	1	330	420	210	320
2-Fluorophenol		60.6	%					
Phenol-D6		66.7	%					
Nitrobenzene-d5		60.1	%					
2-Fluorobiphenyl		66.7	%					
2,4,6-Tribromophenol		70.7	%					
Terphenyl-d14		87.8	%					

600 Technology Way
P.O. Box 540, Scarborough, ME 04070
Tel:(207) 874-2400 Fax:(207) 775-4029

http://www.katahdinlab.com

Report of Analytical Results

Client: Tetra Tech NUS, Inc.
Lab ID: SD4692-17
Client ID: B185A3-SB1-0103
Project: CTO WE19 NS Newport, Soi
SDG: WE19-6

Sample Date: 28-JUL-10
Received Date: 03-AUG-10
Extract Date: 06-AUG-10
Extracted By: WS
Extraction Method: SW846 3550
Lab Prep Batch: WG80603

Analysis Date: 11-AUG-10
Analyst: JCG
Analysis Method: SW846 8270C
Matrix: SL
% Solids: 87.
Report Date: 23-AUG-10

Compound	Qualifier	Result	Units	Dilution	LOQ	ADJ LOQ	ADJ MDL	ADJ LOD
N-Nitrosodimethylamine	U	280	ug/Kgdrywt	1	330	370	98.	280
Phenol	U	280	ug/Kgdrywt	1	330	370	180	280
Bis(2-Chloroethyl) Ether	U	280	ug/Kgdrywt	1	330	370	92.	280
2-Chlorophenol	U	280	ug/Kgdrywt	1	330	370	180	280
1,3-Dichlorobenzene	U	280	ug/Kgdrywt	1	330	370	88.	280
1,4-Dichlorobenzene	U	280	ug/Kgdrywt	1	330	370	97.	280
1,2-Dichlorobenzene	U	280	ug/Kgdrywt	1	330	370	100	280
Benzyl Alcohol	U	560	ug/Kgdrywt	1	660	750	64.	560
2-Methylphenol	U	280	ug/Kgdrywt	1	330	370	230	280
2,2'-Oxybis(1-Chloropropane)	U	280	ug/Kgdrywt	1	330	370	100	280
3&4-Methylphenol	U	280	ug/Kgdrywt	1	330	370	210	280
N-Nitroso-Di-N-Propylamine	U	280	ug/Kgdrywt	1	330	370	94.	280
Hexachloroethane	U	280	ug/Kgdrywt	1	330	370	110	280
Nitrobenzene	U	280	ug/Kgdrywt	1	330	370	100	280
Isophorone	U	280	ug/Kgdrywt	1	330	370	85.	280
2-Nitrophenol	U	280	ug/Kgdrywt	1	330	370	190	280
2,4-Dimethylphenol	U	280	ug/Kgdrywt	1	330	370	190	280
Bis(2-Chloroethoxy) Methane	U	280	ug/Kgdrywt	1	330	370	110	280
2,4-Dichlorophenol	U	280	ug/Kgdrywt	1	330	370	170	280
1,2,4-Trichlorobenzene	U	280	ug/Kgdrywt	1	330	370	92.	280
Benzoic Acid	U	700	ug/Kgdrywt	1	820	930	390	700
4-Chloroaniline	U	280	ug/Kgdrywt	1	330	370	130	280
Hexachlorobutadiene	U	280	ug/Kgdrywt	1	330	370	94.	280
4-Chloro-3-Methylphenol	U	280	ug/Kgdrywt	1	330	370	190	280
2,4,6-Trichlorophenol	U	280	ug/Kgdrywt	1	330	370	180	280
2,4,5-Trichlorophenol	U	700	ug/Kgdrywt	1	820	930	180	700
2-Chloronaphthalene	U	280	ug/Kgdrywt	1	330	370	98.	280
2-Nitroaniline	U	700	ug/Kgdrywt	1	820	930	85.	700
Dimethyl Phthalate	U	280	ug/Kgdrywt	1	330	370	88.	280
2,6-Dinitrotoluene	U	280	ug/Kgdrywt	1	330	370	89.	280
3-Nitroaniline	U	700	ug/Kgdrywt	1	820	930	110	700
2,4-Dinitrophenol	U	700	ug/Kgdrywt	1	820	930	430	700
4-Nitrophenol	U	700	ug/Kgdrywt	1	820	930	350	700
Dibenzofuran	U	280	ug/Kgdrywt	1	330	370	89.	280
2,4-Dinitrotoluene	U	280	ug/Kgdrywt	1	330	370	96.	280

600 Technology Way
P.O. Box 540, Scarborough, ME 04070
Tel:(207) 874-2400 Fax:(207) 775-4029

Report of Analytical Results

Client: Tetra Tech NUS, Inc.
Lab ID: SD4692-17
Client ID: B185A3-SB1-0103
Project: CTO WE19 NS Newport, Soi
SDG: WE19-6

Sample Date: 28-JUL-10
Received Date: 03-AUG-10
Extract Date: 06-AUG-10
Extracted By: WS
Extraction Method: SW846 3550
Lab Prep Batch: WG80603

Analysis Date: 11-AUG-10
Analyst: JCG
Analysis Method: SW846 8270C
Matrix: SL
% Solids: 87.
Report Date: 23-AUG-10

Compound	Qualifier	Result	Units	Dilution	LOQ	ADJ LOQ	ADJ MDL	ADJ LOD
Diethylphthalate	U	280	ug/Kgdrywt	1	330	370	90.	280
4-Chlorophenyl-Phenylether	U	280	ug/Kgdrywt	1	330	370	88.	280
4-Nitroaniline	U	700	ug/Kgdrywt	1	820	930	150	700
4,6-Dinitro-2-Methylphenol	U	700	ug/Kgdrywt	1	820	930	380	700
N-Nitrosodiphenylamine	U	280	ug/Kgdrywt	1	330	370	250	280
1,2-Diphenylhydrazine	U	560	ug/Kgdrywt	1	660	750	160	560
4-Bromophenyl-Phenylether	U	280	ug/Kgdrywt	1	330	370	96.	280
Hexachlorobenzene	U	280	ug/Kgdrywt	1	330	370	93.	280
Pentachlorophenol	U	700	ug/Kgdrywt	1	820	930	270	700
Carbazole	U	280	ug/Kgdrywt	1	330	370	120	280
Di-N-Butylphthalate	U	280	ug/Kgdrywt	1	330	370	110	280
Benzidine	U	1300	ug/Kgdrywt	1	1500	1700	110	1300
Butylbenzylphthalate	U	280	ug/Kgdrywt	1	330	370	100	280
3,3'-Dichlorobenzidine	U	280	ug/Kgdrywt	1	330	370	130	280
Bis(2-Ethylhexyl)Phthalate	U	280	ug/Kgdrywt	1	330	370	110	280
Di-N-Octylphthalate	U	280	ug/Kgdrywt	1	330	370	240	280
1,1'-biphenyl	U	280	ug/Kgdrywt	1	330	370	83.	280
2,6-Dichlorophenol	U	280	ug/Kgdrywt	1	330	370	190	280
N-nitrosopyrrolidine	U	280	ug/Kgdrywt	1	330	370	190	280
2-Fluorophenol		61.3	%					
Phenol-D6		68.7	%					
Nitrobenzene-d5		60.8	%					
2-Fluorobiphenyl		66.7	%					
2,4,6-Tribromophenol		71.6	%					
Terphenyl-d14		84.6	%					

600 Technology Way
P.O. Box 540, Scarborough, ME 04070
Tel:(207) 874-2400 Fax:(207) 775-4029

http://www.katahdinlab.com

Katahdin
ANALYTICAL SERVICES

Cert No E87604

Report of Analytical Results

Client: Tetra Tech NUS, Inc.
Lab ID: SD4692-19
Client ID: B185A3-SB1-0305
Project: CTO WE19 NS Newport, Soi
SDG: WE19-6

Sample Date: 28-JUL-10
Received Date: 03-AUG-10
Extract Date: 06-AUG-10
Extracted By: WS
Extraction Method: SW846 3550
Lab Prep Batch: WG80603

Analysis Date: 10-AUG-10
Analyst: JCG
Analysis Method: SW846 8270C
Matrix: SL
% Solids: 87.
Report Date: 23-AUG-10

Compound	Qualifier	Result	Units	Dilution	LOQ	ADJ LOQ	ADJ MDL	ADJ LOD
N-Nitrosodimethylamine	U	270	ug/Kgdrywt	1	330	360	94.	270
Phenol	U	270	ug/Kgdrywt	1	330	360	170	270
Bis(2-Chloroethyl) Ether	U	270	ug/Kgdrywt	1	330	360	88.	270
2-Chlorophenol	U	270	ug/Kgdrywt	1	330	360	180	270
1,3-Dichlorobenzene	U	270	ug/Kgdrywt	1	330	360	85.	270
1,4-Dichlorobenzene	U	270	ug/Kgdrywt	1	330	360	93.	270
1,2-Dichlorobenzene	U	270	ug/Kgdrywt	1	330	360	96.	270
Benzyl Alcohol	U	540	ug/Kgdrywt	1	660	720	62.	540
2-Methylphenol	U	270	ug/Kgdrywt	1	330	360	220	270
2,2'-Oxybis(1-Chloropropane)	U	270	ug/Kgdrywt	1	330	360	97.	270
3&4-Methylphenol	U	270	ug/Kgdrywt	1	330	360	200	270
N-Nitroso-Di-N-Propylamine	U	270	ug/Kgdrywt	1	330	360	90.	270
Hexachloroethane	U	270	ug/Kgdrywt	1	330	360	100	270
Nitrobenzene	U	270	ug/Kgdrywt	1	330	360	99.	270
Isophorone	U	270	ug/Kgdrywt	1	330	360	82.	270
2-Nitrophenol	U	270	ug/Kgdrywt	1	330	360	180	270
2,4-Dimethylphenol	U	270	ug/Kgdrywt	1	330	360	180	270
Bis(2-Chloroethoxy) Methane	U	270	ug/Kgdrywt	1	330	360	100	270
2,4-Dichlorophenol	U	270	ug/Kgdrywt	1	330	360	160	270
1,2,4-Trichlorobenzene	U	270	ug/Kgdrywt	1	330	360	88.	270
Benzoic Acid	U	670	ug/Kgdrywt	1	820	890	370	670
4-Chloroaniline	U	270	ug/Kgdrywt	1	330	360	130	270
Hexachlorobutadiene	U	270	ug/Kgdrywt	1	330	360	90.	270
4-Chloro-3-Methylphenol	U	270	ug/Kgdrywt	1	330	360	180	270
2,4,6-Trichlorophenol	U	270	ug/Kgdrywt	1	330	360	170	270
2,4,5-Trichlorophenol	U	670	ug/Kgdrywt	1	820	890	170	670
2-Chloronaphthalene	U	270	ug/Kgdrywt	1	330	360	94.	270
2-Nitroaniline	U	670	ug/Kgdrywt	1	820	890	82.	670
Dimethyl Phthalate	U	270	ug/Kgdrywt	1	330	360	85.	270
2,6-Dinitrotoluene	U	270	ug/Kgdrywt	1	330	360	86.	270
3-Nitroaniline	U	670	ug/Kgdrywt	1	820	890	100	670
2,4-Dinitrophenol	U	670	ug/Kgdrywt	1	820	890	410	670
4-Nitrophenol	U	670	ug/Kgdrywt	1	820	890	340	670
Dibenzofuran	U	270	ug/Kgdrywt	1	330	360	86.	270
2,4-Dinitrotoluene	U	270	ug/Kgdrywt	1	330	360	92.	270

600 Technology Way
P.O. Box 540, Scarborough, ME 04070
Tel:(207) 874-2400 Fax:(207) 775-4029

Report of Analytical Results

Client: Tetra Tech NUS, Inc.
Lab ID: SD4692-19
Client ID: B185A3-SB1-0305
Project: CTO WE19 NS Newport, Soi
SDG: WE19-6

Sample Date: 28-JUL-10
Received Date: 03-AUG-10
Extract Date: 06-AUG-10
Extracted By: WS
Extraction Method: SW846 3550
Lab Prep Batch: WG80603

Analysis Date: 10-AUG-10
Analyst: JCG
Analysis Method: SW846 8270C
Matrix: SL
% Solids: 87.
Report Date: 23-AUG-10

Compound	Qualifier	Result	Units	Dilution	LOQ	ADJ LOQ	ADJ MDL	ADJ LOD
Diethylphthalate	U	270	ug/Kgdrywt	1	330	360	87.	270
4-Chlorophenyl-Phenylether	U	270	ug/Kgdrywt	1	330	360	85.	270
4-Nitroaniline	U	670	ug/Kgdrywt	1	820	890	140	670
4,6-Dinitro-2-Methylphenol	U	670	ug/Kgdrywt	1	820	890	370	670
N-Nitrosodiphenylamine	U	270	ug/Kgdrywt	1	330	360	240	270
1,2-Diphenylhydrazine	U	540	ug/Kgdrywt	1	660	720	150	540
4-Bromophenyl-Phenylether	U	270	ug/Kgdrywt	1	330	360	92.	270
Hexachlorobenzene	U	270	ug/Kgdrywt	1	330	360	89.	270
Pentachlorophenol	U	670	ug/Kgdrywt	1	820	890	260	670
Carbazole	U	270	ug/Kgdrywt	1	330	360	120	270
Di-N-Butylphthalate	U	270	ug/Kgdrywt	1	330	360	110	270
Benzidine	U	1200	ug/Kgdrywt	1	1500	1600	110	1200
Butylbenzylphthalate	U	270	ug/Kgdrywt	1	330	360	100	270
3,3'-Dichlorobenzidine	U	270	ug/Kgdrywt	1	330	360	120	270
Bis(2-Ethylhexyl)Phthalate	U	270	ug/Kgdrywt	1	330	360	110	270
Di-N-Octylphthalate	U	270	ug/Kgdrywt	1	330	360	230	270
1,1'-biphenyl	U	270	ug/Kgdrywt	1	330	360	79.	270
2,6-Dichlorophenol	U	270	ug/Kgdrywt	1	330	360	180	270
N-nitrosopyrrolidine	U	270	ug/Kgdrywt	1	330	360	180	270
2-Fluorophenol		58.3	%					
Phenol-D6		64.1	%					
Nitrobenzene-d5		57.4	%					
2-Fluorobiphenyl		64.1	%					
2,4,6-Tribromophenol		66.6	%					
Terphenyl-d14		86.2	%					

600 Technology Way
P.O. Box 540, Scarborough, ME 04070
Tel:(207) 874-2400 Fax:(207) 775-4029

http://www.katahdinlab.com

Katahdin
ANALYTICAL SERVICES

ACCREDITED IN ACCORDANCE WITH nelac
Cert No E87604

Report of Analytical Results

Client: Tetra Tech NUS, Inc.
Lab ID: SD4621-1RA
Client ID: RB-DPT-072910
Project: CTO WE19 NS Newport, Soi
SDG: WE19-6

Sample Date: 29-JUL-10
Received Date: 30-JUL-10
Extract Date: 02-AUG-10
Extracted By: KF
Extraction Method: SW846 3520
Lab Prep Batch: WG80425

Analysis Date: 13-AUG-10
Analyst: JCG
Analysis Method: SW846 M8270C
Matrix: AQ
% Solids: NA
Report Date: 26-AUG-10

Compound	Qualifier	Result	Units	Dilution	LOQ	ADJ LOQ	ADJ MDL	ADJ LOD
Naphthalene	U	0.095	ug/L	1	.2	0.19	0.061	0.095
2-Methylnaphthalene	U	0.095	ug/L	1	.2	0.19	0.073	0.095
Acenaphthylene	U	0.095	ug/L	1	.2	0.19	0.051	0.095
Acenaphthene	U	0.095	ug/L	1	.2	0.19	0.061	0.095
Fluorene	U	0.095	ug/L	1	.2	0.19	0.058	0.095
Phenanthrene	U	0.095	ug/L	1	.2	0.19	0.048	0.095
Anthracene	U	0.095	ug/L	1	.2	0.19	0.042	0.095
Fluoranthene	U	0.095	ug/L	1	.2	0.19	0.070	0.095
Pyrene	U	0.095	ug/L	1	.2	0.19	0.056	0.095
Benzo (a) anthracene	U	0.095	ug/L	1	.2	0.19	0.044	0.095
Chrysene	U	0.095	ug/L	1	.2	0.19	0.034	0.095
Benzo (b) Fluoranthene	U	0.095	ug/L	1	.2	0.19	0.085	0.095
Benzo(k)fluoranthene	U	0.095	ug/L	1	.2	0.19	0.047	0.095
Benzo(a)pyrene	U	0.095	ug/L	1	.2	0.19	0.063	0.095
Indeno (1,2,3-cd) pyrene	U	0.095	ug/L	1	.2	0.19	0.050	0.095
Dibenzo (a,h) anthracene	U	0.095	ug/L	1	.2	0.19	0.067	0.095
Benzo(g,h,i)perylene	U	0.095	ug/L	1	.2	0.19	0.062	0.095
2-Methylnaphthalene-D10		68.5	%					
Fluorene-D10		53.3	%					
pyrene-d10		87.1	%					

600 Technology Way
P.O. Box 540, Scarborough, ME 04070
Tel:(207) 874-2400 Fax:(207) 775-4029

Report of Analytical Results

Client: Tetra Tech NUS, Inc.
Lab ID: SD4692-1
Client ID: B185A1-SB1-0103
Project: CTO WE19 NS Newport, Soil
SDG: WE19-6

Sample Date: 28-JUL-10
Received Date: 03-AUG-10
Extract Date: 06-AUG-10
Extracted By: WS
Extraction Method: SW846 3550
Lab Prep Batch: WG80605

Analysis Date: 11-AUG-10
Analyst: JCG
Analysis Method: SW846 M8270C
Matrix: SL
% Solids: 88.
Report Date: 26-AUG-10

Compound	Qualifier	Result	Units	Dilution	LOQ	ADJ LOQ	ADJ MDL	ADJ LOD
Naphthalene	U	11.	ug/Kgdrywt	1	20	22.	2.9	11.
2-Methylnaphthalene	J	4.0	ug/Kgdrywt	1	20	22.	2.4	11.
Acenaphthylene	U	11.	ug/Kgdrywt	1	20	22.	1.3	11.
Acenaphthene	J	3.9	ug/Kgdrywt	1	20	22.	1.7	11.
Fluorene	J	5.5	ug/Kgdrywt	1	20	22.	3.6	11.
Phenanthrene		35.	ug/Kgdrywt	1	20	22.	2.0	11.
Anthracene	J	6.0	ug/Kgdrywt	1	20	22.	1.3	11.
Fluoranthene		49.	ug/Kgdrywt	1	20	22.	2.0	11.
Pyrene		54.	ug/Kgdrywt	1	20	22.	2.3	11.
Benzo (a) anthracene		25.	ug/Kgdrywt	1	20	22.	2.1	11.
Chrysene		29.	ug/Kgdrywt	1	20	22.	1.9	11.
Benzo (b) Fluoranthene		37.	ug/Kgdrywt	1	20	22.	2.7	11.
Benzo(k)fluoranthene	J	15.	ug/Kgdrywt	1	20	22.	3.4	11.
Benzo(a)pyrene		26.	ug/Kgdrywt	1	20	22.	3.7	11.
Indeno (1,2,3-cd) pyrene	J	21.	ug/Kgdrywt	1	20	22.	2.1	11.
Dibenzo (a,h) anthracene	U	11.	ug/Kgdrywt	1	20	22.	2.0	11.
Benzo(g,h,i)perylene	J	18.	ug/Kgdrywt	1	20	22.	2.2	11.
2-Methylnaphthalene-D10	*	113.	%					
Fluorene-D10		46.6	%					
Pyrene-D10		89.6	%					

600 Technology Way
P.O. Box 540, Scarborough, ME 04070
Tel:(207) 874-2400 Fax:(207) 775-4029

http://www.katahdinlab.com

Katahdin
ANALYTICAL SERVICES

Cert No E87604

Report of Analytical Results

Client: Tetra Tech NUS, Inc.
Lab ID: SD4692-3
Client ID: B185A1-SB1-0708
Project: CTO WE19 NS Newport, Soi
SDG: WE19-6

Sample Date: 28-JUL-10
Received Date: 03-AUG-10
Extract Date: 06-AUG-10
Extracted By: WS
Extraction Method: SW846 3550
Lab Prep Batch: WG80605

Analysis Date: 10-AUG-10
Analyst: JCG
Analysis Method: SW846 M8270C
Matrix: SL
% Solids: 93.
Report Date: 26-AUG-10

Compound	Qualifier	Result	Units	Dilution	LOQ	ADJ LOQ	ADJ MDL	ADJ LOD
Naphthalene	U	10.	ug/Kgdrywt	1	20	21.	2.7	10.
2-Methylnaphthalene	J	2.5	ug/Kgdrywt	1	20	21.	2.3	10.
Acenaphthylene	U	10.	ug/Kgdrywt	1	20	21.	1.2	10.
Acenaphthene	J	2.2	ug/Kgdrywt	1	20	21.	1.6	10.
Fluorene	J	4.7	ug/Kgdrywt	1	20	21.	3.3	10.
Phenanthrene	J	15.	ug/Kgdrywt	1	20	21.	1.9	10.
Anthracene	J	2.4	ug/Kgdrywt	1	20	21.	1.2	10.
Fluoranthene	J	19.	ug/Kgdrywt	1	20	21.	1.9	10.
Pyrene	J	13.	ug/Kgdrywt	1	20	21.	2.2	10.
Benzo (a) anthracene	J	6.7	ug/Kgdrywt	1	20	21.	2.0	10.
Chrysene	J	6.6	ug/Kgdrywt	1	20	21.	1.8	10.
Benzo (b) Fluoranthene	J	9.5	ug/Kgdrywt	1	20	21.	2.5	10.
Benzo(k)fluoranthene	J	3.4	ug/Kgdrywt	1	20	21.	3.2	10.
Benzo(a)pyrene	J	4.9	ug/Kgdrywt	1	20	21.	3.4	10.
Indeno (1,2,3-cd) pyrene	J	7.9	ug/Kgdrywt	1	20	21.	2.0	10.
Dibenzo (a,h) anthracene	U	10.	ug/Kgdrywt	1	20	21.	1.9	10.
Benzo(g,h,i)perylene	J	3.2	ug/Kgdrywt	1	20	21.	2.1	10.
2-Methylnaphthalene-D10	*	115.	%					
Fluorene-D10		49.8	%					
Pyrene-D10		80.1	%					

600 Technology Way
P.O. Box 540, Scarborough, ME 04070
Tel:(207) 874-2400 Fax:(207) 775-4029

http://www.katahdinlab.com

Report of Analytical Results

Client: Tetra Tech NUS, Inc.
Lab ID: SD4692-5
Client ID: B185A1-SB2-0103
Project: CTO WE19 NS Newport, Soil
SDG: WE19-6

Sample Date: 28-JUL-10
Received Date: 03-AUG-10
Extract Date: 06-AUG-10
Extracted By: WS
Extraction Method: SW846 3550
Lab Prep Batch: WG80605

Analysis Date: 10-AUG-10
Analyst: JCG
Analysis Method: SW846 M8270C
Matrix: SL
% Solids: 86.
Report Date: 26-AUG-10

Compound	Qualifier	Result	Units	Dilution	LOQ	ADJ LOQ	ADJ MDL	ADJ LOD
Naphthalene	J	6.4	ug/Kgdrywt	1	20	23.	3.0	11.
2-Methylnaphthalene	J	6.3	ug/Kgdrywt	1	20	23.	2.5	11.
Acenaphthylene	U	11.	ug/Kgdrywt	1	20	23.	1.4	11.
Acenaphthene	J	3.0	ug/Kgdrywt	1	20	23.	1.7	11.
Fluorene	U	11.	ug/Kgdrywt	1	20	23.	3.6	11.
Phenanthrene		39.	ug/Kgdrywt	1	20	23.	2.0	11.
Anthracene	J	9.8	ug/Kgdrywt	1	20	23.	1.4	11.
Fluoranthene		130	ug/Kgdrywt	1	20	23.	2.0	11.
Pyrene		100	ug/Kgdrywt	1	20	23.	2.4	11.
Benzo (a) anthracene		70.	ug/Kgdrywt	1	20	23.	2.2	11.
Chrysene		65.	ug/Kgdrywt	1	20	23.	1.9	11.
Benzo (b) Fluoranthene		84.	ug/Kgdrywt	1	20	23.	2.7	11.
Benzo(k)fluoranthene		31.	ug/Kgdrywt	1	20	23.	3.5	11.
Benzo(a)pyrene		65.	ug/Kgdrywt	1	20	23.	3.8	11.
Indeno (1,2,3-cd) pyrene		55.	ug/Kgdrywt	1	20	23.	2.2	11.
Dibenzo (a,h) anthracene	J	14.	ug/Kgdrywt	1	20	23.	2.0	11.
Benzo(g,h,i)perylene		40.	ug/Kgdrywt	1	20	23.	2.3	11.
2-Methylnaphthalene-D10	*	112.	%					
Fluorene-D10		48.7	%					
Pyrene-D10		82.7	%					

600 Technology Way
P.O. Box 540, Scarborough, ME 04070
Tel:(207) 874-2400 Fax:(207) 775-4029

http://www.katahdinlab.com

Katahdin
ANALYTICAL SERVICES

Cert No E87604

Report of Analytical Results

Client: Tetra Tech NUS, Inc.
Lab ID: SD4692-7RA
Client ID: B185A1-SB2-0305
Project: CTO WE19 NS Newport, Soi
SDG: WE19-6

Sample Date: 28-JUL-10
Received Date: 03-AUG-10
Extract Date: 06-AUG-10
Extracted By: WS
Extraction Method: SW846 3550
Lab Prep Batch: WG80605

Analysis Date: 12-AUG-10
Analyst: JCG
Analysis Method: SW846 M8270C
Matrix: SL
% Solids: 85.
Report Date: 26-AUG-10

Compound	Qualifier	Result	Units	Dilution	LOQ	ADJ LOQ	ADJ MDL	ADJ LOD
Naphthalene	U	12.	ug/Kgdrywt	1	20	23.	3.0	12.
2-Methylnaphthalene	U	12.	ug/Kgdrywt	1	20	23.	2.5	12.
Acenaphthylene	U	12.	ug/Kgdrywt	1	20	23.	1.4	12.
Acenaphthene	U	12.	ug/Kgdrywt	1	20	23.	1.7	12.
Fluorene	U	12.	ug/Kgdrywt	1	20	23.	3.7	12.
Phenanthrene	U	12.	ug/Kgdrywt	1	20	23.	2.1	12.
Anthracene	U	12.	ug/Kgdrywt	1	20	23.	1.4	12.
Fluoranthene	J	16.	ug/Kgdrywt	1	20	23.	2.1	12.
Pyrene	J	10.	ug/Kgdrywt	1	20	23.	2.4	12.
Benzo (a) anthracene	J	5.2	ug/Kgdrywt	1	20	23.	2.2	12.
Chrysene	J	6.7	ug/Kgdrywt	1	20	23.	2.0	12.
Benzo (b) Fluoranthene	J	9.0	ug/Kgdrywt	1	20	23.	2.8	12.
Benzo(k)fluoranthene	J	4.0	ug/Kgdrywt	1	20	23.	3.6	12.
Benzo(a)pyrene	J	5.6	ug/Kgdrywt	1	20	23.	3.8	12.
Indeno (1,2,3-cd) pyrene	J	4.7	ug/Kgdrywt	1	20	23.	2.2	12.
Dibenzo (a,h) anthracene	U	12.	ug/Kgdrywt	1	20	23.	2.1	12.
Benzo(g,h,i)perylene	J	3.4	ug/Kgdrywt	1	20	23.	2.3	12.
2-Methylnaphthalene-D10		86.0	%					
Fluorene-D10		41.4	%					
Pyrene-D10		62.8	%					

600 Technology Way
P.O. Box 540, Scarborough, ME 04070
Tel:(207) 874-2400 Fax:(207) 775-4029

Report of Analytical Results

Client: Tetra Tech NUS, Inc.
Lab ID: SD4692-9
Client ID: B185A1-SB3-0103
Project: CTO WE19 NS Newport, Soil
SDG: WE19-6

Sample Date: 28-JUL-10
Received Date: 03-AUG-10
Extract Date: 06-AUG-10
Extracted By: WS
Extraction Method: SW846 3550
Lab Prep Batch: WG80605

Analysis Date: 11-AUG-10
Analyst: JCG
Analysis Method: SW846 M8270C
Matrix: SL
% Solids: 86.
Report Date: 26-AUG-10

Compound	Qualifier	Result	Units	Dilution	LOQ	ADJ LOQ	ADJ MDL	ADJ LOD
Naphthalene	U	11.	ug/Kgdrywt	1	20	23.	3.0	11.
2-Methylnaphthalene	U	11.	ug/Kgdrywt	1	20	23.	2.5	11.
Acenaphthylene	U	11.	ug/Kgdrywt	1	20	23.	1.4	11.
Acenaphthene	J	6.3	ug/Kgdrywt	1	20	23.	1.7	11.
Fluorene	J	10.	ug/Kgdrywt	1	20	23.	3.6	11.
Phenanthrene		120	ug/Kgdrywt	1	20	23.	2.0	11.
Anthracene	J	12.	ug/Kgdrywt	1	20	23.	1.4	11.
Fluoranthene		130	ug/Kgdrywt	1	20	23.	2.0	11.
Pyrene		140	ug/Kgdrywt	1	20	23.	2.4	11.
Benzo (a) anthracene		55.	ug/Kgdrywt	1	20	23.	2.2	11.
Chrysene		67.	ug/Kgdrywt	1	20	23.	1.9	11.
Benzo (b) Fluoranthene		77.	ug/Kgdrywt	1	20	23.	2.7	11.
Benzo(k)fluoranthene		32.	ug/Kgdrywt	1	20	23.	3.5	11.
Benzo(a)pyrene		54.	ug/Kgdrywt	1	20	23.	3.8	11.
Indeno (1,2,3-cd) pyrene		53.	ug/Kgdrywt	1	20	23.	2.2	11.
Dibenzo (a,h) anthracene	J	11.	ug/Kgdrywt	1	20	23.	2.0	11.
Benzo(g,h,i)perylene		41.	ug/Kgdrywt	1	20	23.	2.3	11.
2-Methylnaphthalene-D10	*	118.	%					
Fluorene-D10		47.4	%					
Pyrene-D10		84.1	%					

600 Technology Way
P.O. Box 540, Scarborough, ME 04070
Tel:(207) 874-2400 Fax:(207) 775-4029

http://www.katahdinlab.com

Katahdin Analytical Services A0000419

Katahdin
ANALYTICAL SERVICES

Cert No E87604

Report of Analytical Results

Client: Tetra Tech NUS, Inc.
Lab ID: SD4692-11
Client ID: B185A1-SB3-0305
Project: CTO WE19 NS Newport, Soi
SDG: WE19-6

Sample Date: 28-JUL-10
Received Date: 03-AUG-10
Extract Date: 06-AUG-10
Extracted By: WS
Extraction Method: SW846 3550
Lab Prep Batch: WG80605

Analysis Date: 11-AUG-10
Analyst: JCG
Analysis Method: SW846 M8270C
Matrix: SL
% Solids: 82.
Report Date: 26-AUG-10

Compound	Qualifier	Result	Units	Dilution	LOQ	ADJ LOQ	ADJ MDL	ADJ LOD
Naphthalene	U	12.	ug/Kgdrywt	1	20	24.	3.1	12.
2-Methylnaphthalene	U	12.	ug/Kgdrywt	1	20	24.	2.6	12.
Acenaphthylene	U	12.	ug/Kgdrywt	1	20	24.	1.4	12.
Acenaphthene	J	12.	ug/Kgdrywt	1	20	24.	1.8	12.
Fluorene	J	18.	ug/Kgdrywt	1	20	24.	3.8	12.
Phenanthrene		130	ug/Kgdrywt	1	20	24.	2.1	12.
Anthracene	J	12.	ug/Kgdrywt	1	20	24.	1.4	12.
Fluoranthene		120	ug/Kgdrywt	1	20	24.	2.1	12.
Pyrene		97.	ug/Kgdrywt	1	20	24.	2.5	12.
Benzo (a) anthracene		46.	ug/Kgdrywt	1	20	24.	2.2	12.
Chrysene		58.	ug/Kgdrywt	1	20	24.	2.0	12.
Benzo (b) Fluoranthene		50.	ug/Kgdrywt	1	20	24.	2.8	12.
Benzo(k)fluoranthene	J	17.	ug/Kgdrywt	1	20	24.	3.6	12.
Benzo(a)pyrene		35.	ug/Kgdrywt	1	20	24.	3.9	12.
Indeno (1,2,3-cd) pyrene		29.	ug/Kgdrywt	1	20	24.	2.2	12.
Dibenzo (a,h) anthracene	U	12.	ug/Kgdrywt	1	20	24.	2.1	12.
Benzo(g,h,i)perylene	J	22.	ug/Kgdrywt	1	20	24.	2.4	12.
2-Methylnaphthalene-D10		38.5	%					
Fluorene-D10		42.5	%					
Pyrene-D10		61.4	%					

600 Technology Way
P.O. Box 540, Scarborough, ME 04070
Tel:(207) 874-2400 Fax:(207) 775-4029

Katahdin
ANALYTICAL SERVICES

Cert No E87604

Report of Analytical Results

Client: Tetra Tech NUS, Inc.
Lab ID: SD4692-11RA
Client ID: B185A1-SB3-0305
Project: CTO WE19 NS Newport, Soi
SDG: WE19-6

Sample Date: 28-JUL-10
Received Date: 03-AUG-10
Extract Date: 06-AUG-10
Extracted By: WS
Extraction Method: SW846 3550
Lab Prep Batch: WG80605

Analysis Date: 12-AUG-10
Analyst: JCG
Analysis Method: SW846 M8270C
Matrix: SL
% Solids: 82.
Report Date: 26-AUG-10

Compound	Qualifier	Result	Units	Dilution	LOQ	ADJ LOQ	ADJ MDL	ADJ LOD
Naphthalene	U	12.	ug/Kgdrywt	1	20	24.	3.1	12.
2-Methylnaphthalene	U	12.	ug/Kgdrywt	1	20	24.	2.6	12.
Acenaphthylene	U	12.	ug/Kgdrywt	1	20	24.	1.4	12.
Acenaphthene	J	12.	ug/Kgdrywt	1	20	24.	1.8	12.
Fluorene	J	18.	ug/Kgdrywt	1	20	24.	3.8	12.
Phenanthrene		130	ug/Kgdrywt	1	20	24.	2.1	12.
Anthracene	J	12.	ug/Kgdrywt	1	20	24.	1.4	12.
Fluoranthene		120	ug/Kgdrywt	1	20	24.	2.1	12.
Pyrene		96.	ug/Kgdrywt	1	20	24.	2.5	12.
Benzo (a) anthracene		44.	ug/Kgdrywt	1	20	24.	2.2	12.
Chrysene		58.	ug/Kgdrywt	1	20	24.	2.0	12.
Benzo (b) Fluoranthene		63.	ug/Kgdrywt	1	20	24.	2.8	12.
Benzo(k)fluoranthene	J	22.	ug/Kgdrywt	1	20	24.	3.6	12.
Benzo(a)pyrene		45.	ug/Kgdrywt	1	20	24.	3.9	12.
Indeno (1,2,3-cd) pyrene		38.	ug/Kgdrywt	1	20	24.	2.2	12.
Dibenzo (a,h) anthracene	J	8.3	ug/Kgdrywt	1	20	24.	2.1	12.
Benzo(g,h,i)perylene		30.	ug/Kgdrywt	1	20	24.	2.4	12.
2-Methylnaphthalene-D10		52.9	%					
Fluorene-D10		41.9	%					
Pyrene-D10		62.4	%					

600 Technology Way
P.O. Box 540, Scarborough, ME 04070
Tel:(207) 874-2400 Fax:(207) 775-4029

http://www.katahdinlab.com

Katahdin
ANALYTICAL SERVICES

Cert No E87604

Report of Analytical Results

Client: Tetra Tech NUS, Inc.
Lab ID: SD4692-13
Client ID: B185A1-SB4-0103
Project: CTO WE19 NS Newport, Soil
SDG: WE19-6

Sample Date: 28-JUL-10
Received Date: 03-AUG-10
Extract Date: 06-AUG-10
Extracted By: WS
Extraction Method: SW846 3550
Lab Prep Batch: WG80605

Analysis Date: 11-AUG-10
Analyst: JCG
Analysis Method: SW846 M8270C
Matrix: SL
% Solids: 83.
Report Date: 26-AUG-10

Compound	Qualifier	Result	Units	Dilution	LOQ	ADJ LOQ	ADJ MDL	ADJ LOD
Naphthalene	J	4.3	ug/Kgdrywt	1	20	24.	3.1	12.
2-Methylnaphthalene	J	5.2	ug/Kgdrywt	1	20	24.	2.6	12.
Acenaphthylene	J	2.8	ug/Kgdrywt	1	20	24.	1.4	12.
Acenaphthene		30.	ug/Kgdrywt	1	20	24.	1.8	12.
Fluorene		44.	ug/Kgdrywt	1	20	24.	3.8	12.
Phenanthrene	E	380	ug/Kgdrywt	1	20	24.	2.1	12.
Anthracene		39.	ug/Kgdrywt	1	20	24.	1.4	12.
Fluoranthene	E	330	ug/Kgdrywt	1	20	24.	2.1	12.
Pyrene	E	320	ug/Kgdrywt	1	20	24.	2.5	12.
Benzo (a) anthracene		160	ug/Kgdrywt	1	20	24.	2.2	12.
Chrysene		180	ug/Kgdrywt	1	20	24.	2.0	12.
Benzo (b) Fluoranthene		220	ug/Kgdrywt	1	20	24.	2.8	12.
Benzo(k)fluoranthene		65.	ug/Kgdrywt	1	20	24.	3.7	12.
Benzo(a)pyrene		140	ug/Kgdrywt	1	20	24.	3.9	12.
Indeno (1,2,3-cd) pyrene		130	ug/Kgdrywt	1	20	24.	2.2	12.
Dibenzo (a,h) anthracene	J	23.	ug/Kgdrywt	1	20	24.	2.1	12.
Benzo(g,h,i)perylene		92.	ug/Kgdrywt	1	20	24.	2.4	12.
2-Methylnaphthalene-D10	*	114.	%					
Fluorene-D10		42.8	%					
Pyrene-D10		79.1	%					

600 Technology Way
P.O. Box 540, Scarborough, ME 04070
Tel:(207) 874-2400 Fax:(207) 775-4029

http://www.katahdinlab.com

Katahdin
ANALYTICAL SERVICES

Cert No E87604

Report of Analytical Results

Client: Tetra Tech NUS, Inc.
Lab ID: SD4692-13DL
Client ID: B185A1-SB4-0103
Project: CTO WE19 NS Newport, Soil
SDG: WE19-6

Sample Date: 28-JUL-10
Received Date: 03-AUG-10
Extract Date: 06-AUG-10
Extracted By: WS
Extraction Method: SW846 3550
Lab Prep Batch: WG80605

Analysis Date: 13-AUG-10
Analyst: JCG
Analysis Method: SW846 M8270C
Matrix: SL
% Solids: 83.
Report Date: 26-AUG-10

Compound	Qualifier	Result	Units	Dilution	LOQ	ADJ LOQ	ADJ MDL	ADJ LOD
Naphthalene	U	24.	ug/Kgdrywt	2	20	47.	6.2	24.
2-Methylnaphthalene	J	6.8	ug/Kgdrywt	2	20	47.	5.2	24.
Acenaphthylene	U	24.	ug/Kgdrywt	2	20	47.	2.8	24.
Acenaphthene	J	33.	ug/Kgdrywt	2	20	47.	3.6	24.
Fluorene		51.	ug/Kgdrywt	2	20	47.	7.6	24.
Phenanthrene		510	ug/Kgdrywt	2	20	47.	4.3	24.
Anthracene	J	43.	ug/Kgdrywt	2	20	47.	2.8	24.
Fluoranthene		400	ug/Kgdrywt	2	20	47.	4.3	24.
Pyrene		380	ug/Kgdrywt	2	20	47.	5.0	24.
Benzo (a) anthracene		180	ug/Kgdrywt	2	20	47.	4.5	24.
Chrysene		210	ug/Kgdrywt	2	20	47.	4.0	24.
Benzo (b) Fluoranthene		260	ug/Kgdrywt	2	20	47.	5.7	24.
Benzo(k)fluoranthene		92.	ug/Kgdrywt	2	20	47.	7.3	24.
Benzo(a)pyrene		170	ug/Kgdrywt	2	20	47.	7.8	24.
Indeno (1,2,3-cd) pyrene		150	ug/Kgdrywt	2	20	47.	4.5	24.
Dibenzo (a,h) anthracene	J	31.	ug/Kgdrywt	2	20	47.	4.3	24.
Benzo(g,h,i)perylene		110	ug/Kgdrywt	2	20	47.	4.7	24.
2-Methylnaphthalene-D10		83.9	%					
Fluorene-D10		55.0	%					
Pyrene-D10		91.6	%					

600 Technology Way
P.O. Box 540, Scarborough, ME 04070
Tel:(207) 874-2400 Fax:(207) 775-4029

http://www.katahdinlab.com

Katahdin
ANALYTICAL SERVICES

Cert No E87604

Report of Analytical Results

Client: Tetra Tech NUS, Inc.
Lab ID: SD4692-15
Client ID: B185A1-SB4-0507
Project: CTO WE19 NS Newport, Soi
SDG: WE19-6

Sample Date: 28-JUL-10
Received Date: 03-AUG-10
Extract Date: 06-AUG-10
Extracted By: WS
Extraction Method: SW846 3550
Lab Prep Batch: WG80605

Analysis Date: 10-AUG-10
Analyst: JCG
Analysis Method: SW846 M8270C
Matrix: SL
% Solids: 76.
Report Date: 26-AUG-10

Compound	Qualifier	Result	Units	Dilution	LOQ	ADJ LOQ	ADJ MDL	ADJ LOD
Naphthalene	U	13.	ug/Kgdrywt	1	20	26.	3.3	13.
2-Methylnaphthalene	U	13.	ug/Kgdrywt	1	20	26.	2.8	13.
Acenaphthylene	J	1.8	ug/Kgdrywt	1	20	26.	1.5	13.
Acenaphthene	J	5.4	ug/Kgdrywt	1	20	26.	1.9	13.
Fluorene	J	5.2	ug/Kgdrywt	1	20	26.	4.1	13.
Phenanthrene		72.	ug/Kgdrywt	1	20	26.	2.3	13.
Anthracene	J	11.	ug/Kgdrywt	1	20	26.	1.5	13.
Fluoranthene		120	ug/Kgdrywt	1	20	26.	2.3	13.
Pyrene		100	ug/Kgdrywt	1	20	26.	2.7	13.
Benzo (a) anthracene		45.	ug/Kgdrywt	1	20	26.	2.4	13.
Chrysene		51.	ug/Kgdrywt	1	20	26.	2.2	13.
Benzo (b) Fluoranthene		71.	ug/Kgdrywt	1	20	26.	3.1	13.
Benzo(k)fluoranthene	J	20.	ug/Kgdrywt	1	20	26.	4.0	13.
Benzo(a)pyrene		50.	ug/Kgdrywt	1	20	26.	4.2	13.
Indeno (1,2,3-cd) pyrene		52.	ug/Kgdrywt	1	20	26.	2.4	13.
Dibenzo (a,h) anthracene	J	14.	ug/Kgdrywt	1	20	26.	2.3	13.
Benzo(g,h,i)perylene		39.	ug/Kgdrywt	1	20	26.	2.6	13.
2-Methylnaphthalene-D10	*	110.	%					
Fluorene-D10		45.7	%					
Pyrene-D10		92.2	%					

600 Technology Way
P.O. Box 540, Scarborough, ME 04070
Tel:(207) 874-2400 Fax:(207) 775-4029

http://www.katahdinlab.com

Katahdin Analytical Services A0000424

Katahdin
ANALYTICAL SERVICES

Cert No E87604

Report of Analytical Results

Client: Tetra Tech NUS, Inc.
Lab ID: SD4692-17
Client ID: B185A3-SB1-0103
Project: CTO WE19 NS Newport, Soi
SDG: WE19-6

Sample Date: 28-JUL-10
Received Date: 03-AUG-10
Extract Date: 06-AUG-10
Extracted By: WS
Extraction Method: SW846 3550
Lab Prep Batch: WG80605

Analysis Date: 11-AUG-10
Analyst: JCG
Analysis Method: SW846 M8270C
Matrix: SL
% Solids: 87.
Report Date: 26-AUG-10

Compound	Qualifier	Result	Units	Dilution	LOQ	ADJ LOQ	ADJ MDL	ADJ LOD
Naphthalene	U	11.	ug/Kgdrywt	1	20	23.	2.9	11.
2-Methylnaphthalene	U	11.	ug/Kgdrywt	1	20	23.	2.5	11.
Acenaphthylene	J	2.0	ug/Kgdrywt	1	20	23.	1.4	11.
Acenaphthene	U	11.	ug/Kgdrywt	1	20	23.	1.7	11.
Fluorene	U	11.	ug/Kgdrywt	1	20	23.	3.6	11.
Phenanthrene	J	2.8	ug/Kgdrywt	1	20	23.	2.0	11.
Anthracene	U	11.	ug/Kgdrywt	1	20	23.	1.4	11.
Fluoranthene	J	3.7	ug/Kgdrywt	1	20	23.	2.0	11.
Pyrene	J	5.1	ug/Kgdrywt	1	20	23.	2.4	11.
Benzo (a) anthracene	U	11.	ug/Kgdrywt	1	20	23.	2.2	11.
Chrysene	U	11.	ug/Kgdrywt	1	20	23.	1.9	11.
Benzo (b) Fluoranthene	U	11.	ug/Kgdrywt	1	20	23.	2.7	11.
Benzo(k)fluoranthene	U	11.	ug/Kgdrywt	1	20	23.	3.5	11.
Benzo(a)pyrene	U	11.	ug/Kgdrywt	1	20	23.	3.7	11.
Indeno (1,2,3-cd) pyrene	U	11.	ug/Kgdrywt	1	20	23.	2.2	11.
Dibenzo (a,h) anthracene	U	11.	ug/Kgdrywt	1	20	23.	2.0	11.
Benzo(g,h,i)perylene	U	11.	ug/Kgdrywt	1	20	23.	2.3	11.
2-Methylnaphthalene-D10	*	112.	%					
Fluorene-D10		41.5	%					
Pyrene-D10		78.5	%					

600 Technology Way
P.O. Box 540, Scarborough, ME 04070
Tel:(207) 874-2400 Fax:(207) 775-4029

http://www.katahdinlab.com

Katahdin Analytical Services A0000425

Report of Analytical Results

Client: Tetra Tech NUS, Inc.
Lab ID: SD4692-19
Client ID: B185A3-SB1-0305
Project: CTO WE19 NS Newport, Soi
SDG: WE19-6

Sample Date: 28-JUL-10
Received Date: 03-AUG-10
Extract Date: 06-AUG-10
Extracted By: WS
Extraction Method: SW846 3550
Lab Prep Batch: WG80605

Analysis Date: 11-AUG-10
Analyst: JCG
Analysis Method: SW846 M8270C
Matrix: SL
% Solids: 87.
Report Date: 26-AUG-10

Compound	Qualifier	Result	Units	Dilution	LOQ	ADJ LOQ	ADJ MDL	ADJ LOD
Naphthalene	U	11.	ug/Kgdrywt	1	20	22.	2.8	11.
2-Methylnaphthalene	U	11.	ug/Kgdrywt	1	20	22.	2.4	11.
Acenaphthylene	U	11.	ug/Kgdrywt	1	20	22.	1.3	11.
Acenaphthene	U	11.	ug/Kgdrywt	1	20	22.	1.6	11.
Fluorene	U	11.	ug/Kgdrywt	1	20	22.	3.5	11.
Phenanthrene	U	11.	ug/Kgdrywt	1	20	22.	2.0	11.
Anthracene	U	11.	ug/Kgdrywt	1	20	22.	1.3	11.
Fluoranthene	U	11.	ug/Kgdrywt	1	20	22.	2.0	11.
Pyrene	U	11.	ug/Kgdrywt	1	20	22.	2.3	11.
Benzo (a) anthracene	U	11.	ug/Kgdrywt	1	20	22.	2.1	11.
Chrysene	U	11.	ug/Kgdrywt	1	20	22.	1.8	11.
Benzo (b) Fluoranthene	U	11.	ug/Kgdrywt	1	20	22.	2.6	11.
Benzo(k)fluoranthene	U	11.	ug/Kgdrywt	1	20	22.	3.4	11.
Benzo(a)pyrene	U	11.	ug/Kgdrywt	1	20	22.	3.6	11.
Indeno (1,2,3-cd) pyrene	U	11.	ug/Kgdrywt	1	20	22.	2.1	11.
Dibenzo (a,h) anthracene	U	11.	ug/Kgdrywt	1	20	22.	2.0	11.
Benzo(g,h,i)perylene	U	11.	ug/Kgdrywt	1	20	22.	2.2	11.
2-Methylnaphthalene-D10	*	106.	%					
Fluorene-D10		43.6	%					
Pyrene-D10		83.7	%					

600 Technology Way
P.O. Box 540, Scarborough, ME 04070
Tel:(207) 874-2400 Fax:(207) 775-4029

http://www.katahdinlab.com

Report of Analytical Results

Client: Tetra Tech NUS, Inc.
Lab ID: SD4621-1RE
Client ID: RB-DPT-072910
Project: CTO WE19 NS Newport, Soi
SDG: WE19-6

Sample Date: 29-JUL-10
Received Date: 30-JUL-10
Extract Date: 05-AUG-10
Extracted By: KF
Extraction Method: SW846 3510
Lab Prep Batch: WG80570

Analysis Date: 10-AUG-10
Analyst: RCT
Analysis Method: SW846 8081A
Matrix: AQ
% Solids: NA
Report Date: 20-AUG-10

Compound	Qualifier	Result	Units	Dilution	LOQ	ADJ LOQ	ADJ MDL	ADJ LOD
alpha-BHC	U	0.024	ug/L	1	.05	0.047	0.0065	0.024
Gamma-BHC	U	0.024	ug/L	1	.05	0.047	0.0068	0.024
Heptachlor	U	0.024	ug/L	1	.05	0.047	0.0075	0.024
Aldrin	U	0.024	ug/L	1	.05	0.047	0.0070	0.024
beta-BHC	U	0.024	ug/L	1	.05	0.047	0.0059	0.024
delta-BHC	U	0.024	ug/L	1	.05	0.047	0.012	0.024
Heptachlor Epoxide	U	0.024	ug/L	1	.05	0.047	0.0070	0.024
Endosulfan I	U	0.024	ug/L	1	.05	0.047	0.0060	0.024
Gamma-Chlordane	U	0.024	ug/L	1	.05	0.047	0.0057	0.024
Alpha-Chlordane	U	0.024	ug/L	1	.05	0.047	0.0072	0.024
4,4'-DDE	U	0.047	ug/L	1	.1	0.094	0.0046	0.047
Dieldrin	U	0.047	ug/L	1	.1	0.094	0.0061	0.047
Endrin	U	0.047	ug/L	1	.1	0.094	0.0079	0.047
4,4'-DDD	U	0.047	ug/L	1	.1	0.094	0.0085	0.047
Endosulfan II	U	0.047	ug/L	1	.1	0.094	0.0054	0.047
4,4'-DDT	U	0.047	ug/L	1	.1	0.094	0.0084	0.047
Endrin Aldehyde	U	0.047	ug/L	1	.1	0.094	0.0058	0.047
Endosulfan Sulfate	U	0.047	ug/L	1	.1	0.094	0.0063	0.047
Methoxychlor	U	0.24	ug/L	1	.5	0.47	0.0079	0.24
Endrin Ketone	U	0.047	ug/L	1	.1	0.094	0.0074	0.047
Toxaphene	U	0.47	ug/L	1	1	0.94	0.16	0.47
Hexachlorobenzene	U	0.047	ug/L	1	.1	0.094	0.013	0.047
Tetrachloro-M-Xylene		93.0	%					
Decachlorobiphenyl		75.0	%					

600 Technology Way
P.O. Box 540, Scarborough, ME 04070
Tel:(207) 874-2400 Fax:(207) 775-4029

http://www.katahdinlab.com

Katahdin
ANALYTICAL SERVICES

Cert No E87604

Report of Analytical Results

Client: Tetra Tech NUS, Inc.
Lab ID: SD4692-1
Client ID: B185A1-SB1-0103
Project: CTO WE19 NS Newport, Soi
SDG: WE19-6

Sample Date: 28-JUL-10
Received Date: 03-AUG-10
Extract Date: 09-AUG-10
Extracted By: WS
Extraction Method: SW846 3550
Lab Prep Batch: WG80691

Analysis Date: 16-AUG-10
Analyst: RCT
Analysis Method: SW846 8081A
Matrix: SL
% Solids: 88.
Report Date: 23-AUG-10

Compound	Qualifier	Result	Units	Dilution	LOQ	ADJ LOQ	ADJ MDL	ADJ LOD
alpha-BHC	U	0.95	ug/Kgdrywt	1	1.7	1.9	0.38	0.95
gamma-BHC	U	0.95	ug/Kgdrywt	1	1.7	1.9	0.30	0.95
Heptachlor	U	0.95	ug/Kgdrywt	1	1.7	1.9	0.32	0.95
Aldrin	U	0.95	ug/Kgdrywt	1	1.7	1.9	0.31	0.95
beta-BHC	U	0.95	ug/Kgdrywt	1	1.7	1.9	0.37	0.95
delta-BHC	U	0.95	ug/Kgdrywt	1	1.7	1.9	0.36	0.95
Heptachlor Epoxide	U	0.95	ug/Kgdrywt	1	1.7	1.9	0.25	0.95
Endosulfan I	U	0.95	ug/Kgdrywt	1	1.7	1.9	0.27	0.95
Gamma-Chlordane	U	0.95	ug/Kgdrywt	1	1.7	1.9	0.26	0.95
Alpha-Chlordane	U	0.95	ug/Kgdrywt	1	1.7	1.9	0.24	0.95
4,4'-DDE	U	1.8	ug/Kgdrywt	1	3.3	3.7	0.21	1.8
Dieldrin	U	1.8	ug/Kgdrywt	1	3.3	3.7	0.25	1.8
Endrin	U	1.8	ug/Kgdrywt	1	3.3	3.7	0.95	1.8
4,4'-DDD	U	1.8	ug/Kgdrywt	1	3.3	3.7	0.22	1.8
Endosulfan II	U	1.8	ug/Kgdrywt	1	3.3	3.7	0.38	1.8
4,4'-DDT	U	1.8	ug/Kgdrywt	1	3.3	3.7	0.35	1.8
Endrin Aldehyde	U	1.8	ug/Kgdrywt	1	3.3	3.7	0.55	1.8
Endosulfan Sulfate	U	1.8	ug/Kgdrywt	1	3.3	3.7	0.65	1.8
Methoxychlor	U	9.5	ug/Kgdrywt	1	17	19.	0.56	9.5
Endrin Ketone	U	1.8	ug/Kgdrywt	1	3.3	3.7	0.45	1.8
Toxaphene	U	18.	ug/Kgdrywt	1	33	37.	7.8	18.
Hexachlorobenzene	U	1.8	ug/Kgdrywt	1	3.3	3.7	0.14	1.8
Tetrachloro-M-Xylene		70.5	%					
Decachlorobiphenyl		77.1	%					

600 Technology Way
P.O. Box 540, Scarborough, ME 04070
Tel:(207) 874-2400 Fax:(207) 775-4029

Katahdin
ANALYTICAL SERVICES

Accredited in accordance with nelac
Cert No E87604

Report of Analytical Results

Client: Tetra Tech NUS, Inc.
Lab ID: SD4692-3
Client ID: B185A1-SB1-0708
Project: CTO WE19 NS Newport, Soi
SDG: WE19-6

Sample Date: 28-JUL-10
Received Date: 03-AUG-10
Extract Date: 09-AUG-10
Extracted By: WS
Extraction Method: SW846 3550
Lab Prep Batch: WG80691

Analysis Date: 16-AUG-10
Analyst: RCT
Analysis Method: SW846 8081A
Matrix: SL
% Solids: 93.
Report Date: 23-AUG-10

Compound	Qualifier	Result	Units	Dilution	LOQ	ADJ LOQ	ADJ MDL	ADJ LOD
alpha-BHC	U	0.90	ug/Kgdrywt	1	1.7	1.8	0.36	0.90
gamma-BHC	U	0.90	ug/Kgdrywt	1	1.7	1.8	0.28	0.90
Heptachlor	J	0.49	ug/Kgdrywt	1	1.7	1.8	0.31	0.90
Aldrin	U	0.90	ug/Kgdrywt	1	1.7	1.8	0.30	0.90
beta-BHC	U	0.90	ug/Kgdrywt	1	1.7	1.8	0.35	0.90
delta-BHC	U	0.90	ug/Kgdrywt	1	1.7	1.8	0.34	0.90
Heptachlor Epoxide	U	0.90	ug/Kgdrywt	1	1.7	1.8	0.23	0.90
Endosulfan I	U	0.90	ug/Kgdrywt	1	1.7	1.8	0.25	0.90
Gamma-Chlordane	J	0.35	ug/Kgdrywt	1	1.7	1.8	0.24	0.90
Alpha-Chlordane	U	0.90	ug/Kgdrywt	1	1.7	1.8	0.22	0.90
4,4'-DDE	U	1.7	ug/Kgdrywt	1	3.3	3.5	0.20	1.7
Dieldrin	U	1.7	ug/Kgdrywt	1	3.3	3.5	0.23	1.7
Endrin	U	1.7	ug/Kgdrywt	1	3.3	3.5	0.90	1.7
4,4'-DDD	U	1.7	ug/Kgdrywt	1	3.3	3.5	0.21	1.7
Endosulfan II	U	1.7	ug/Kgdrywt	1	3.3	3.5	0.36	1.7
4,4'-DDT	U	1.7	ug/Kgdrywt	1	3.3	3.5	0.33	1.7
Endrin Aldehyde	U	1.7	ug/Kgdrywt	1	3.3	3.5	0.52	1.7
Endosulfan Sulfate	U	1.7	ug/Kgdrywt	1	3.3	3.5	0.61	1.7
Methoxychlor	U	9.0	ug/Kgdrywt	1	17	18.	0.53	9.0
Endrin Ketone	U	1.7	ug/Kgdrywt	1	3.3	3.5	0.42	1.7
Toxaphene	U	17.	ug/Kgdrywt	1	33	35.	7.4	17.
Hexachlorobenzene	U	1.7	ug/Kgdrywt	1	3.3	3.5	0.14	1.7
Tetrachloro-M-Xylene		70.7	%					
Decachlorobiphenyl		82.8	%					

600 Technology Way
P.O. Box 540, Scarborough, ME 04070
Tel:(207) 874-2400 Fax:(207) 775-4029

http://www.katahdinlab.com

Katahdin
ANALYTICAL SERVICES

Cert No E87604

Report of Analytical Results

Client: Tetra Tech NUS, Inc.
Lab ID: SD4692-5RE
Client ID: B185A1-SB2-0103
Project: CTO WE19 NS Newport, Soi
SDG: WE19-6

Sample Date: 28-JUL-10
Received Date: 03-AUG-10
Extract Date: 12-AUG-10
Extracted By: KF
Extraction Method: SW846 3550
Lab Prep Batch: WG80877

Analysis Date: 16-AUG-10
Analyst: RCT
Analysis Method: SW846 8081A
Matrix: SL
% Solids: 86.
Report Date: 24-AUG-10

Compound	Qualifier	Result	Units	Dilution	LOQ	ADJ LOQ	ADJ MDL	ADJ LOD
alpha-BHC	U	0.98	ug/Kgdrywt	1	1.7	2.0	0.39	0.98
gamma-BHC	U	0.98	ug/Kgdrywt	1	1.7	2.0	0.31	0.98
Heptachlor	U	0.98	ug/Kgdrywt	1	1.7	2.0	0.34	0.98
Aldrin	U	0.98	ug/Kgdrywt	1	1.7	2.0	0.32	0.98
beta-BHC	U	0.98	ug/Kgdrywt	1	1.7	2.0	0.38	0.98
delta-BHC	U	0.98	ug/Kgdrywt	1	1.7	2.0	0.37	0.98
Heptachlor Epoxide	U	0.98	ug/Kgdrywt	1	1.7	2.0	0.25	0.98
Endosulfan I	U	0.98	ug/Kgdrywt	1	1.7	2.0	0.28	0.98
Gamma-Chlordane	U	0.98	ug/Kgdrywt	1	1.7	2.0	0.27	0.98
Alpha-Chlordane	U	0.98	ug/Kgdrywt	1	1.7	2.0	0.24	0.98
4,4'-DDE	U	1.9	ug/Kgdrywt	1	3.3	3.8	0.22	1.9
Dieldrin	U	1.9	ug/Kgdrywt	1	3.3	3.8	0.25	1.9
Endrin	U	1.9	ug/Kgdrywt	1	3.3	3.8	0.98	1.9
4,4'-DDD	JJ	0.81	ug/Kgdrywt	1	3.3	3.8	0.23	1.9
Endosulfan II	U	1.9	ug/Kgdrywt	1	3.3	3.8	0.39	1.9
4,4'-DDT	U	1.9	ug/Kgdrywt	1	3.3	3.8	0.36	1.9
Endrin Aldehyde	U	1.9	ug/Kgdrywt	1	3.3	3.8	0.57	1.9
Endosulfan Sulfate	U	1.9	ug/Kgdrywt	1	3.3	3.8	0.67	1.9
Methoxychlor	U	9.8	ug/Kgdrywt	1	17	20.	0.58	9.8
Endrin Ketone	U	1.9	ug/Kgdrywt	1	3.3	3.8	0.46	1.9
Toxaphene	U	18.	ug/Kgdrywt	1	33	38.	8.1	18.
Hexachlorobenzene	U	1.9	ug/Kgdrywt	1	3.3	3.8	0.15	1.9
Tetrachloro-M-Xylene		75.6	%					
Decachlorobiphenyl		88.8	%					

600 Technology Way
P.O. Box 540, Scarborough, ME 04070
Tel:(207) 874-2400 Fax:(207) 775-4029

http://www.katahdinlab.com

Katahdin
ANALYTICAL SERVICES

Accredited in accordance with nelac
Cert No E87604

Report of Analytical Results

Client: Tetra Tech NUS, Inc.
Lab ID: SD4692-7
Client ID: B185A1-SB2-0305
Project: CTO WE19 NS Newport, Soil
SDG: WE19-6

Sample Date: 28-JUL-10
Received Date: 03-AUG-10
Extract Date: 09-AUG-10
Extracted By: WS
Extraction Method: SW846 3550
Lab Prep Batch: WG80691

Analysis Date: 16-AUG-10
Analyst: RCT
Analysis Method: SW846 8081A
Matrix: SL
% Solids: 85.
Report Date: 23-AUG-10

Compound	Qualifier	Result	Units	Dilution	LOQ	ADJ LOQ	ADJ MDL	ADJ LOD
alpha-BHC	U	1.0	ug/Kgdrywt	1	1.7	2.0	0.40	1.0
gamma-BHC	U	1.0	ug/Kgdrywt	1	1.7	2.0	0.32	1.0
Heptachlor	U	1.0	ug/Kgdrywt	1	1.7	2.0	0.34	1.0
Aldrin	U	1.0	ug/Kgdrywt	1	1.7	2.0	0.33	1.0
beta-BHC	U	1.0	ug/Kgdrywt	1	1.7	2.0	0.39	1.0
delta-BHC	U	1.0	ug/Kgdrywt	1	1.7	2.0	0.38	1.0
Heptachlor Epoxide	U	1.0	ug/Kgdrywt	1	1.7	2.0	0.26	1.0
Endosulfan I	U	1.0	ug/Kgdrywt	1	1.7	2.0	0.28	1.0
Gamma-Chlordane	U	1.0	ug/Kgdrywt	1	1.7	2.0	0.27	1.0
Alpha-Chlordane	U	1.0	ug/Kgdrywt	1	1.7	2.0	0.25	1.0
4,4'-DDE	U	1.9	ug/Kgdrywt	1	3.3	3.9	0.22	1.9
Dieldrin	U	1.9	ug/Kgdrywt	1	3.3	3.9	0.26	1.9
Endrin	U	1.9	ug/Kgdrywt	1	3.3	3.9	1.0	1.9
4,4'-DDD	U	1.9	ug/Kgdrywt	1	3.3	3.9	0.24	1.9
Endosulfan II	U	1.9	ug/Kgdrywt	1	3.3	3.9	0.40	1.9
4,4'-DDT	U	1.9	ug/Kgdrywt	1	3.3	3.9	0.36	1.9
Endrin Aldehyde	U	1.9	ug/Kgdrywt	1	3.3	3.9	0.58	1.9
Endosulfan Sulfate	U	1.9	ug/Kgdrywt	1	3.3	3.9	0.68	1.9
Methoxychlor	U	10.	ug/Kgdrywt	1	17	20.	0.59	10.
Endrin Ketone	U	1.9	ug/Kgdrywt	1	3.3	3.9	0.47	1.9
Toxaphene	U	19.	ug/Kgdrywt	1	33	39.	8.2	19.
Hexachlorobenzene	U	1.9	ug/Kgdrywt	1	3.3	3.9	0.15	1.9
Tetrachloro-M-Xylene		68.8	%					
Decachlorobiphenyl		79.2	%					

600 Technology Way
P.O. Box 540, Scarborough, ME 04070
Tel:(207) 874-2400 Fax:(207) 775-4029

Katahdin
ANALYTICAL SERVICES

Cert No E87604

Report of Analytical Results

Client: Tetra Tech NUS, Inc.
Lab ID: SD4692-9
Client ID: B185A1-SB3-0103
Project: CTO WE19 NS Newport, Soi
SDG: WE19-6

Sample Date: 28-JUL-10
Received Date: 03-AUG-10
Extract Date: 09-AUG-10
Extracted By: WS
Extraction Method: SW846 3550
Lab Prep Batch: WG80691

Analysis Date: 16-AUG-10
Analyst: RCT
Analysis Method: SW846 8081A
Matrix: SL
% Solids: 86.
Report Date: 24-AUG-10

Compound	Qualifier	Result	Units	Dilution	LOQ	ADJ LOQ	ADJ MDL	ADJ LOD
alpha-BHC	U	0.99	ug/Kgdrywt	1	1.7	2.0	0.40	0.99
gamma-BHC	U	0.99	ug/Kgdrywt	1	1.7	2.0	0.31	0.99
Heptachlor	U	0.99	ug/Kgdrywt	1	1.7	2.0	0.34	0.99
Aldrin	U	0.99	ug/Kgdrywt	1	1.7	2.0	0.32	0.99
beta-BHC	U	0.99	ug/Kgdrywt	1	1.7	2.0	0.38	0.99
delta-BHC	J	0.72	ug/Kgdrywt	1	1.7	2.0	0.37	0.99
Heptachlor Epoxide	U	0.99	ug/Kgdrywt	1	1.7	2.0	0.26	0.99
Endosulfan I	U	0.99	ug/Kgdrywt	1	1.7	2.0	0.28	0.99
Gamma-Chlordane	U	0.99	ug/Kgdrywt	1	1.7	2.0	0.27	0.99
Alpha-Chlordane	U	0.99	ug/Kgdrywt	1	1.7	2.0	0.24	0.99
4,4'-DDE	U	1.9	ug/Kgdrywt	1	3.3	3.8	0.22	1.9
Dieldrin	U	1.9	ug/Kgdrywt	1	3.3	3.8	0.26	1.9
Endrin	U	1.9	ug/Kgdrywt	1	3.3	3.8	0.99	1.9
4,4'-DDD	JJ	1.0	ug/Kgdrywt	1	3.3	3.8	0.23	1.9
Endosulfan II	U	1.9	ug/Kgdrywt	1	3.3	3.8	0.40	1.9
4,4'-DDT	JJ	0.90	ug/Kgdrywt	1	3.3	3.8	0.36	1.9
Endrin Aldehyde	U	1.9	ug/Kgdrywt	1	3.3	3.8	0.57	1.9
Endosulfan Sulfate	U	1.9	ug/Kgdrywt	1	3.3	3.8	0.67	1.9
Methoxychlor	U	9.9	ug/Kgdrywt	1	17	20.	0.58	9.9
Endrin Ketone	U	1.9	ug/Kgdrywt	1	3.3	3.8	0.46	1.9
Toxaphene	U	18.	ug/Kgdrywt	1	33	38.	8.1	18.
Hexachlorobenzene	U	1.9	ug/Kgdrywt	1	3.3	3.8	0.15	1.9
Tetrachloro-M-Xylene		75.8	%					
Decachlorobiphenyl		80.5	%					

600 Technology Way
P.O. Box 540, Scarborough, ME 04070
Tel:(207) 874-2400 Fax:(207) 775-4029

http://www.katahdinlab.com

Katahdin
ANALYTICAL SERVICES

Cert No E87604

Report of Analytical Results

Client: Tetra Tech NUS, Inc.
Lab ID: SD4692-11
Client ID: B185A1-SB3-0305
Project: CTO WE19 NS Newport, Soi
SDG: WE19-6

Sample Date: 28-JUL-10
Received Date: 03-AUG-10
Extract Date: 09-AUG-10
Extracted By: WS
Extraction Method: SW846 3550
Lab Prep Batch: WG80691

Analysis Date: 17-AUG-10
Analyst: RCT
Analysis Method: SW846 8081A
Matrix: SL
% Solids: 82.
Report Date: 24-AUG-10

Compound	Qualifier	Result	Units	Dilution	LOQ	ADJ LOQ	ADJ MDL	ADJ LOD
alpha-BHC	U	1.0	ug/Kgdrywt	1	1.7	2.0	0.41	1.0
gamma-BHC	U	1.0	ug/Kgdrywt	1	1.7	2.0	0.33	1.0
Heptachlor	U	1.0	ug/Kgdrywt	1	1.7	2.0	0.35	1.0
Aldrin	U	1.0	ug/Kgdrywt	1	1.7	2.0	0.34	1.0
beta-BHC	U	1.0	ug/Kgdrywt	1	1.7	2.0	0.40	1.0
delta-BHC	U	1.0	ug/Kgdrywt	1	1.7	2.0	0.39	1.0
Heptachlor Epoxide	U	1.0	ug/Kgdrywt	1	1.7	2.0	0.26	1.0
Endosulfan I	U	1.0	ug/Kgdrywt	1	1.7	2.0	0.29	1.0
Gamma-Chlordane	U	1.0	ug/Kgdrywt	1	1.7	2.0	0.28	1.0
Alpha-Chlordane	U	1.0	ug/Kgdrywt	1	1.7	2.0	0.25	1.0
4,4'-DDE	U	2.0	ug/Kgdrywt	1	3.3	4.0	0.23	2.0
Dieldrin	U	2.0	ug/Kgdrywt	1	3.3	4.0	0.26	2.0
Endrin	U	2.0	ug/Kgdrywt	1	3.3	4.0	1.0	2.0
4,4'-DDD	U	2.0	ug/Kgdrywt	1	3.3	4.0	0.24	2.0
Endosulfan II	U	2.0	ug/Kgdrywt	1	3.3	4.0	0.41	2.0
4,4'-DDT	J	0.68	ug/Kgdrywt	1	3.3	4.0	0.37	2.0
Endrin Aldehyde	U	2.0	ug/Kgdrywt	1	3.3	4.0	0.59	2.0
Endosulfan Sulfate	U	2.0	ug/Kgdrywt	1	3.3	4.0	0.70	2.0
Methoxychlor	U	10.	ug/Kgdrywt	1	17	20.	0.60	10.
Endrin Ketone	J	1.8	ug/Kgdrywt	1	3.3	4.0	0.48	2.0
Toxaphene	U	19.	ug/Kgdrywt	1	33	40.	8.4	19.
Hexachlorobenzene	U	2.0	ug/Kgdrywt	1	3.3	4.0	0.16	2.0
Tetrachloro-M-Xylene		72.9	%					
Decachlorobiphenyl		75.5	%					

600 Technology Way
P.O. Box 540, Scarborough, ME 04070
Tel:(207) 874-2400 Fax:(207) 775-4029

http://www.katahdinlab.com

Report of Analytical Results

Client: Tetra Tech NUS, Inc.
Lab ID: SD4692-13
Client ID: B185A1-SB4-0103
Project: CTO WE19 NS Newport, Soil
SDG: WE19-6

Sample Date: 28-JUL-10
Received Date: 03-AUG-10
Extract Date: 09-AUG-10
Extracted By: WS
Extraction Method: SW846 3550
Lab Prep Batch: WG80691

Analysis Date: 17-AUG-10
Analyst: RCT
Analysis Method: SW846 8081A
Matrix: SL
% Solids: 83.
Report Date: 24-AUG-10

Compound	Qualifier	Result	Units	Dilution	LOQ	ADJ LOQ	ADJ MDL	ADJ LOD
alpha-BHC	U	1.0	ug/Kgdrywt	1	1.7	2.0	0.40	1.0
gamma-BHC	U	1.0	ug/Kgdrywt	1	1.7	2.0	0.32	1.0
Heptachlor	U	1.0	ug/Kgdrywt	1	1.7	2.0	0.34	1.0
Aldrin	U	1.0	ug/Kgdrywt	1	1.7	2.0	0.33	1.0
beta-BHC	U	1.0	ug/Kgdrywt	1	1.7	2.0	0.39	1.0
delta-BHC	J	0.84	ug/Kgdrywt	1	1.7	2.0	0.38	1.0
Heptachlor Epoxide	U	1.0	ug/Kgdrywt	1	1.7	2.0	0.26	1.0
Endosulfan I	U	1.0	ug/Kgdrywt	1	1.7	2.0	0.28	1.0
Gamma-Chlordane	U	1.0	ug/Kgdrywt	1	1.7	2.0	0.27	1.0
Alpha-Chlordane	U	1.0	ug/Kgdrywt	1	1.7	2.0	0.25	1.0
4,4'-DDE	JJ	0.43	ug/Kgdrywt	1	3.3	3.9	0.22	1.9
Dieldrin	U	1.9	ug/Kgdrywt	1	3.3	3.9	0.26	1.9
Endrin	U	1.9	ug/Kgdrywt	1	3.3	3.9	1.0	1.9
4,4'-DDD	U	1.9	ug/Kgdrywt	1	3.3	3.9	0.24	1.9
Endosulfan II	U	1.9	ug/Kgdrywt	1	3.3	3.9	0.40	1.9
4,4'-DDT	U	1.9	ug/Kgdrywt	1	3.3	3.9	0.36	1.9
Endrin Aldehyde	U	1.9	ug/Kgdrywt	1	3.3	3.9	0.58	1.9
Endosulfan Sulfate	U	1.9	ug/Kgdrywt	1	3.3	3.9	0.68	1.9
Methoxychlor	U	10.	ug/Kgdrywt	1	17	20.	0.59	10.
Endrin Ketone	U	1.9	ug/Kgdrywt	1	3.3	3.9	0.47	1.9
Toxaphene	U	19.	ug/Kgdrywt	1	33	39.	8.2	19.
Hexachlorobenzene	U	1.9	ug/Kgdrywt	1	3.3	3.9	0.15	1.9
Tetrachloro-M-Xylene		74.1	%					
Decachlorobiphenyl		79.1	%					

600 Technology Way
P.O. Box 540, Scarborough, ME 04070
Tel:(207) 874-2400 Fax:(207) 775-4029

Report of Analytical Results

Client: Tetra Tech NUS, Inc.
Lab ID: SD4692-15
Client ID: B185A1-SB4-0507
Project: CTO WE19 NS Newport, Soil
SDG: WE19-6

Sample Date: 28-JUL-10
Received Date: 03-AUG-10
Extract Date: 09-AUG-10
Extracted By: WS
Extraction Method: SW846 3550
Lab Prep Batch: WG80691

Analysis Date: 17-AUG-10
Analyst: RCT
Analysis Method: SW846 8081A
Matrix: SL
% Solids: 76.
Report Date: 24-AUG-10

Compound	Qualifier	Result	Units	Dilution	LOQ	ADJ LOQ	ADJ MDL	ADJ LOD
alpha-BHC	U	1.0	ug/Kgdrywt	1	1.7	2.1	0.42	1.0
gamma-BHC	U	1.0	ug/Kgdrywt	1	1.7	2.1	0.33	1.0
Heptachlor	U	1.0	ug/Kgdrywt	1	1.7	2.1	0.36	1.0
Aldrin	U	1.0	ug/Kgdrywt	1	1.7	2.1	0.35	1.0
beta-BHC	U	1.0	ug/Kgdrywt	1	1.7	2.1	0.41	1.0
delta-BHC	U	1.0	ug/Kgdrywt	1	1.7	2.1	0.40	1.0
Heptachlor Epoxide	U	1.0	ug/Kgdrywt	1	1.7	2.1	0.27	1.0
Endosulfan I	JJ	1.0	ug/Kgdrywt	1	1.7	2.1	0.30	1.0
Gamma-Chlordane	U	1.0	ug/Kgdrywt	1	1.7	2.1	0.28	1.0
Alpha-Chlordane	U	1.0	ug/Kgdrywt	1	1.7	2.1	0.26	1.0
4,4'-DDE	U	2.0	ug/Kgdrywt	1	3.3	4.1	0.24	2.0
Dieldrin	U	2.0	ug/Kgdrywt	1	3.3	4.1	0.27	2.0
Endrin	U	2.0	ug/Kgdrywt	1	3.3	4.1	1.0	2.0
4,4'-DDD	U	2.0	ug/Kgdrywt	1	3.3	4.1	0.25	2.0
Endosulfan II	U	2.0	ug/Kgdrywt	1	3.3	4.1	0.42	2.0
4,4'-DDT	U	2.0	ug/Kgdrywt	1	3.3	4.1	0.38	2.0
Endrin Aldehyde	U	2.0	ug/Kgdrywt	1	3.3	4.1	0.61	2.0
Endosulfan Sulfate	U	2.0	ug/Kgdrywt	1	3.3	4.1	0.72	2.0
Methoxychlor	U	10.	ug/Kgdrywt	1	17	21.	0.62	10.
Endrin Ketone	U	2.0	ug/Kgdrywt	1	3.3	4.1	0.50	2.0
Toxaphene	U	20.	ug/Kgdrywt	1	33	41.	8.7	20.
Hexachlorobenzene	J	1.5	ug/Kgdrywt	1	3.3	4.1	0.16	2.0
Tetrachloro-M-Xylene		72.5	%					
Decachlorobiphenyl		76.8	%					

600 Technology Way
P.O. Box 540, Scarborough, ME 04070
Tel:(207) 874-2400 Fax:(207) 775-4029

http://www.katahdinlab.com

Report of Analytical Results

Client: Tetra Tech NUS, Inc.
Lab ID: SD4692-17
Client ID: B185A3-SB1-0103
Project: CTO WE19 NS Newport, Soi
SDG: WE19-6

Sample Date: 28-JUL-10
Received Date: 03-AUG-10
Extract Date: 09-AUG-10
Extracted By: WS
Extraction Method: SW846 3550
Lab Prep Batch: WG80691

Analysis Date: 17-AUG-10
Analyst: RCT
Analysis Method: SW846 8081A
Matrix: SL
% Solids: 87.
Report Date: 24-AUG-10

Compound	Qualifier	Result	Units	Dilution	LOQ	ADJ LOQ	ADJ MDL	ADJ LOD
alpha-BHC	U	0.95	ug/Kgdrywt	1	1.7	1.9	0.38	0.95
gamma-BHC	U	0.95	ug/Kgdrywt	1	1.7	1.9	0.30	0.95
Heptachlor	U	0.95	ug/Kgdrywt	1	1.7	1.9	0.32	0.95
Aldrin	U	0.95	ug/Kgdrywt	1	1.7	1.9	0.31	0.95
beta-BHC	U	0.95	ug/Kgdrywt	1	1.7	1.9	0.37	0.95
delta-BHC	U	0.95	ug/Kgdrywt	1	1.7	1.9	0.36	0.95
Heptachlor Epoxide	U	0.95	ug/Kgdrywt	1	1.7	1.9	0.24	0.95
Endosulfan I	U	0.95	ug/Kgdrywt	1	1.7	1.9	0.27	0.95
Gamma-Chlordane	U	0.95	ug/Kgdrywt	1	1.7	1.9	0.26	0.95
Alpha-Chlordane	U	0.95	ug/Kgdrywt	1	1.7	1.9	0.23	0.95
4,4'-DDE	U	1.8	ug/Kgdrywt	1	3.3	3.7	0.21	1.8
Dieldrin	U	1.8	ug/Kgdrywt	1	3.3	3.7	0.24	1.8
Endrin	U	1.8	ug/Kgdrywt	1	3.3	3.7	0.95	1.8
4,4'-DDD	U	1.8	ug/Kgdrywt	1	3.3	3.7	0.22	1.8
Endosulfan II	U	1.8	ug/Kgdrywt	1	3.3	3.7	0.38	1.8
4,4'-DDT	U	1.8	ug/Kgdrywt	1	3.3	3.7	0.35	1.8
Endrin Aldehyde	U	1.8	ug/Kgdrywt	1	3.3	3.7	0.55	1.8
Endosulfan Sulfate	U	1.8	ug/Kgdrywt	1	3.3	3.7	0.65	1.8
Methoxychlor	U	9.5	ug/Kgdrywt	1	17	19.	0.56	9.5
Endrin Ketone	U	1.8	ug/Kgdrywt	1	3.3	3.7	0.45	1.8
Toxaphene	U	18.	ug/Kgdrywt	1	33	37.	7.8	18.
Hexachlorobenzene	U	1.8	ug/Kgdrywt	1	3.3	3.7	0.14	1.8
Tetrachloro-M-Xylene		65.6	%					
Decachlorobiphenyl		72.3	%					

600 Technology Way
P.O. Box 540, Scarborough, ME 04070
Tel:(207) 874-2400 Fax:(207) 775-4029

Katahdin
ANALYTICAL SERVICES

Cert No E87604

Report of Analytical Results

Client: Tetra Tech NUS, Inc.
Lab ID: SD4692-19
Client ID: B185A3-SB1-0305
Project: CTO WE19 NS Newport, Soi
SDG: WE19-6

Sample Date: 28-JUL-10
Received Date: 03-AUG-10
Extract Date: 09-AUG-10
Extracted By: WS
Extraction Method: SW846 3550
Lab Prep Batch: WG80691

Analysis Date: 17-AUG-10
Analyst: RCT
Analysis Method: SW846 8081A
Matrix: SL
% Solids: 87.
Report Date: 23-AUG-10

Compound	Qualifier	Result	Units	Dilution	LOQ	ADJ LOQ	ADJ MDL	ADJ LOD
alpha-BHC	U	0.98	ug/Kgdrywt	1	1.7	2.0	0.39	0.98
gamma-BHC	U	0.98	ug/Kgdrywt	1	1.7	2.0	0.31	0.98
Heptachlor	U	0.98	ug/Kgdrywt	1	1.7	2.0	0.33	0.98
Aldrin	U	0.98	ug/Kgdrywt	1	1.7	2.0	0.32	0.98
beta-BHC	U	0.98	ug/Kgdrywt	1	1.7	2.0	0.38	0.98
delta-BHC	U	0.98	ug/Kgdrywt	1	1.7	2.0	0.37	0.98
Heptachlor Epoxide	U	0.98	ug/Kgdrywt	1	1.7	2.0	0.25	0.98
Endosulfan I	U	0.98	ug/Kgdrywt	1	1.7	2.0	0.28	0.98
Gamma-Chlordane	U	0.98	ug/Kgdrywt	1	1.7	2.0	0.26	0.98
Alpha-Chlordane	U	0.98	ug/Kgdrywt	1	1.7	2.0	0.24	0.98
4,4'-DDE	U	1.9	ug/Kgdrywt	1	3.3	3.8	0.22	1.9
Dieldrin	U	1.9	ug/Kgdrywt	1	3.3	3.8	0.25	1.9
Endrin	U	1.9	ug/Kgdrywt	1	3.3	3.8	0.98	1.9
4,4'-DDD	U	1.9	ug/Kgdrywt	1	3.3	3.8	0.23	1.9
Endosulfan II	U	1.9	ug/Kgdrywt	1	3.3	3.8	0.39	1.9
4,4'-DDT	U	1.9	ug/Kgdrywt	1	3.3	3.8	0.36	1.9
Endrin Aldehyde	U	1.9	ug/Kgdrywt	1	3.3	3.8	0.56	1.9
Endosulfan Sulfate	U	1.9	ug/Kgdrywt	1	3.3	3.8	0.66	1.9
Methoxychlor	U	9.8	ug/Kgdrywt	1	17	20.	0.57	9.8
Endrin Ketone	U	1.9	ug/Kgdrywt	1	3.3	3.8	0.46	1.9
Toxaphene	U	18.	ug/Kgdrywt	1	33	38.	8.0	18.
Hexachlorobenzene	U	1.9	ug/Kgdrywt	1	3.3	3.8	0.15	1.9
Tetrachloro-M-Xylene		72.3	%					
Decachlorobiphenyl		77.0	%					

600 Technology Way
P.O. Box 540, Scarborough, ME 04070
Tel:(207) 874-2400 Fax:(207) 775-4029

Katahdin
ANALYTICAL SERVICES

Cert No E87604

Report of Analytical Results

Client: Tetra Tech NUS, Inc.
Lab ID: SD4621-1RE
Client ID: RB-DPT-072910
Project: CTO WE19 NS Newport, Soi
SDG: WE19-6

Sample Date: 29-JUL-10
Received Date: 30-JUL-10
Extract Date: 12-AUG-10
Extracted By: WS
Extraction Method: SW846 3510
Lab Prep Batch: WG80890

Analysis Date: 13-AUG-10
Analyst: RCT
Analysis Method: SW846 8082
Matrix: AQ
% Solids: NA
Report Date: 25-AUG-10

Compound	Qualifier	Result	Units	Dilution	LOQ	ADJ LOQ	ADJ MDL	ADJ LOD
Aroclor-1016	U	0.24	ug/L	1	.5	0.48	0.14	0.24
Aroclor-1221	U	0.24	ug/L	1	.5	0.48	0.19	0.24
Aroclor-1232	U	0.24	ug/L	1	.5	0.48	0.085	0.24
Aroclor-1242	U	0.24	ug/L	1	.5	0.48	0.17	0.24
Aroclor-1248	U	0.24	ug/L	1	.5	0.48	0.19	0.24
Aroclor-1254	U	0.24	ug/L	1	.5	0.48	0.078	0.24
Aroclor-1260	U	0.24	ug/L	1	.5	0.48	0.16	0.24
Aroclor-1268	U	0.24	ug/L	1	.5	0.48	0.068	0.24
Tetrachloro-M-Xylene		72.4	%					
Decachlorobiphenyl		67.6	%					

600 Technology Way
P.O. Box 540, Scarborough, ME 04070
Tel:(207) 874-2400 Fax:(207) 775-4029

http://www.katahdinlab.com

Katahdin
ANALYTICAL SERVICES

ACCREDITED IN ACCORDANCE WITH nelac
Cert No E87604

Report of Analytical Results

Client: Tetra Tech NUS, Inc.
Lab ID: SD4692-1
Client ID: B185A1-SB1-0103
Project: CTO WE19 NS Newport, Soi
SDG: WE19-6

Sample Date: 28-JUL-10
Received Date: 03-AUG-10
Extract Date: 09-AUG-10
Extracted By: WS
Extraction Method: SW846 3550
Lab Prep Batch: WG80690

Analysis Date: 12-AUG-10
Analyst: RCT
Analysis Method: SW846 8082
Matrix: SL
% Solids: 88.
Report Date: 23-AUG-10

Compound	Qualifier	Result	Units	Dilution	LOQ	ADJ LOQ	ADJ MDL	ADJ LOD
Aroclor-1016	U	9.5	ug/Kgdrywt	1	17	19.	6.7	9.5
Aroclor-1221	U	9.5	ug/Kgdrywt	1	17	19.	8.9	9.5
Aroclor-1232	U	11.	ug/Kgdrywt	1	17	19.	10.	11.
Aroclor-1242	U	9.5	ug/Kgdrywt	1	17	19.	6.5	9.5
Aroclor-1248	U	9.5	ug/Kgdrywt	1	17	19.	6.8	9.5
Aroclor-1254	U	9.5	ug/Kgdrywt	1	17	19.	5.3	9.5
Aroclor-1260	U	9.5	ug/Kgdrywt	1	17	19.	6.7	9.5
Aroclor-1268	U	9.5	ug/Kgdrywt	1	17	19.	2.9	9.5
Tetrachloro-M-Xylene		70.5	%					
Decachlorobiphenyl		63.2	%					

600 Technology Way
P.O. Box 540, Scarborough, ME 04070
Tel:(207) 874-2400 Fax:(207) 775-4029

Katahdin
ANALYTICAL SERVICES

Cert No E87604

Report of Analytical Results

Client: Tetra Tech NUS, Inc.
Lab ID: SD4692-3
Client ID: B185A1-SB1-0708
Project: CTO WE19 NS Newport, Soil
SDG: WE19-6

Sample Date: 28-JUL-10
Received Date: 03-AUG-10
Extract Date: 09-AUG-10
Extracted By: WS
Extraction Method: SW846 3550
Lab Prep Batch: WG80690

Analysis Date: 12-AUG-10
Analyst: RCT
Analysis Method: SW846 8082
Matrix: SL
% Solids: 93.
Report Date: 25-AUG-10

Compound	Qualifier	Result	Units	Dilution	LOQ	ADJ LOQ	ADJ MDL	ADJ LOD
Aroclor-1016	U	9.0	ug/Kgdrywt	1	17	18.	6.3	9.0
Aroclor-1221	U	9.0	ug/Kgdrywt	1	17	18.	8.3	9.0
Aroclor-1232	U	10.	ug/Kgdrywt	1	17	18.	9.8	10.
Aroclor-1242	U	9.0	ug/Kgdrywt	1	17	18.	6.1	9.0
Aroclor-1248	U	9.0	ug/Kgdrywt	1	17	18.	6.4	9.0
Aroclor-1254	U	9.0	ug/Kgdrywt	1	17	18.	5.0	9.0
Aroclor-1260	U	9.0	ug/Kgdrywt	1	17	18.	6.3	9.0
Aroclor-1268	U	9.0	ug/Kgdrywt	1	17	18.	2.7	9.0
Tetrachloro-M-Xylene		70.6	%					
Decachlorobiphenyl		66.3	%					

600 Technology Way
P.O. Box 540, Scarborough, ME 04070
Tel:(207) 874-2400 Fax:(207) 775-4029

http://www.katahdinlab.com

Katahdin
ANALYTICAL SERVICES

Cert No E87604

Report of Analytical Results

Client: Tetra Tech NUS, Inc.
Lab ID: SD4692-5RE
Client ID: B185A1-SB2-0103
Project: CTO WE19 NS Newport, Soil
SDG: WE19-6

Sample Date: 28-JUL-10
Received Date: 03-AUG-10
Extract Date: 12-AUG-10
Extracted By: KF
Extraction Method: SW846 3550
Lab Prep Batch: WG80878

Analysis Date: 17-AUG-10
Analyst: RCT
Analysis Method: SW846 8082
Matrix: SL
% Solids: 86.
Report Date: 23-AUG-10

Compound	Qualifier	Result	Units	Dilution	LOQ	ADJ LOQ	ADJ MDL	ADJ LOD
Aroclor-1016	U	9.8	ug/Kgdrywt	1	17	20.	6.9	9.8
Aroclor-1221	U	9.8	ug/Kgdrywt	1	17	20.	9.1	9.8
Aroclor-1232	U	12.	ug/Kgdrywt	1	17	20.	11.	12.
Aroclor-1242	U	9.8	ug/Kgdrywt	1	17	20.	6.7	9.8
Aroclor-1248	U	9.8	ug/Kgdrywt	1	17	20.	7.0	9.8
Aroclor-1254	U	9.8	ug/Kgdrywt	1	17	20.	5.4	9.8
Aroclor-1260	U	9.8	ug/Kgdrywt	1	17	20.	6.9	9.8
Aroclor-1268	U	9.8	ug/Kgdrywt	1	17	20.	3.0	9.8
Tetrachloro-M-Xylene		82.8	%					
Decachlorobiphenyl		77.5	%					

600 Technology Way
P.O. Box 540, Scarborough, ME 04070
Tel:(207) 874-2400 Fax:(207) 775-4029

http://www.katahdinlab.com

Katahdin
ANALYTICAL SERVICES

Accredited in accordance with nelac
Cert No E87604

Report of Analytical Results

Client: Tetra Tech NUS, Inc.
Lab ID: SD4692-7
Client ID: B185A1-SB2-0305
Project: CTO WE19 NS Newport, Soi
SDG: WE19-6

Sample Date: 28-JUL-10
Received Date: 03-AUG-10
Extract Date: 09-AUG-10
Extracted By: WS
Extraction Method: SW846 3550
Lab Prep Batch: WG80690

Analysis Date: 12-AUG-10
Analyst: RCT
Analysis Method: SW846 8082
Matrix: SL
% Solids: 85.
Report Date: 24-AUG-10

Compound	Qualifier	Result	Units	Dilution	LOQ	ADJ LOQ	ADJ MDL	ADJ LOD
Aroclor-1016	U	10.	ug/Kgdrywt	1	17	20.	7.1	10.
Aroclor-1221	U	10.	ug/Kgdrywt	1	17	20.	9.3	10.
Aroclor-1232	U	12.	ug/Kgdrywt	1	17	20.	11.	12.
Aroclor-1242	U	10.	ug/Kgdrywt	1	17	20.	6.8	10.
Aroclor-1248	U	10.	ug/Kgdrywt	1	17	20.	7.2	10.
Aroclor-1254	U	10.	ug/Kgdrywt	1	17	20.	5.5	10.
Aroclor-1260	U	10.	ug/Kgdrywt	1	17	20.	7.1	10.
Aroclor-1268	U	10.	ug/Kgdrywt	1	17	20.	3.1	10.
Tetrachloro-M-Xylene		62.6	%					
Decachlorobiphenyl		64.1	%					

600 Technology Way
P.O. Box 540, Scarborough, ME 04070
Tel:(207) 874-2400 Fax:(207) 775-4029
http://www.katahdinlab.com

Katahdin
ANALYTICAL SERVICES

Accredited in accordance with nelac
Cert No E87604

Report of Analytical Results

Client: Tetra Tech NUS, Inc.
Lab ID: SD4692-9
Client ID: B185A1-SB3-0103
Project: CTO WE19 NS Newport, Soi
SDG: WE19-6

Sample Date: 28-JUL-10
Received Date: 03-AUG-10
Extract Date: 09-AUG-10
Extracted By: WS
Extraction Method: SW846 3550
Lab Prep Batch: WG80690

Analysis Date: 12-AUG-10
Analyst: RCT
Analysis Method: SW846 8082
Matrix: SL
% Solids: 86.
Report Date: 23-AUG-10

Compound	Qualifier	Result	Units	Dilution	LOQ	ADJ LOQ	ADJ MDL	ADJ LOD
Aroclor-1016	U	9.9	ug/Kgdrywt	1	17	20.	7.0	9.9
Aroclor-1221	U	9.9	ug/Kgdrywt	1	17	20.	9.2	9.9
Aroclor-1232	U	12.	ug/Kgdrywt	1	17	20.	11.	12.
Aroclor-1242	U	9.9	ug/Kgdrywt	1	17	20.	6.7	9.9
Aroclor-1248	U	9.9	ug/Kgdrywt	1	17	20.	7.1	9.9
Aroclor-1254	U	9.9	ug/Kgdrywt	1	17	20.	5.5	9.9
Aroclor-1260	U	9.9	ug/Kgdrywt	1	17	20.	7.0	9.9
Aroclor-1268	U	9.9	ug/Kgdrywt	1	17	20.	3.0	9.9
Tetrachloro-M-Xylene		80.5	%					
Decachlorobiphenyl		63.4	%					

600 Technology Way
P.O. Box 540, Scarborough, ME 04070
Tel:(207) 874-2400 Fax:(207) 775-4029

http://www.katahdinlab.com

Report of Analytical Results

Client: Tetra Tech NUS, Inc.
Lab ID: SD4692-11
Client ID: B185A1-SB3-0305
Project: CTO WE19 NS Newport, Soi
SDG: WE19-6

Sample Date: 28-JUL-10
Received Date: 03-AUG-10
Extract Date: 09-AUG-10
Extracted By: WS
Extraction Method: SW846 3550
Lab Prep Batch: WG80690

Analysis Date: 12-AUG-10
Analyst: RCT
Analysis Method: SW846 8082
Matrix: SL
% Solids: 82.
Report Date: 23-AUG-10

Compound	Qualifier	Result	Units	Dilution	LOQ	ADJ LOQ	ADJ MDL	ADJ LOD
Aroclor-1016	U	10.	ug/Kgdrywt	1	17	20.	7.2	10.
Aroclor-1221	U	10.	ug/Kgdrywt	1	17	20.	9.5	10.
Aroclor-1232	U	12.	ug/Kgdrywt	1	17	20.	11.	12.
Aroclor-1242	U	10.	ug/Kgdrywt	1	17	20.	7.0	10.
Aroclor-1248	U	10.	ug/Kgdrywt	1	17	20.	7.4	10.
Aroclor-1254	U	10.	ug/Kgdrywt	1	17	20.	5.7	10.
Aroclor-1260	U	10.	ug/Kgdrywt	1	17	20.	7.2	10.
Aroclor-1268	U	10.	ug/Kgdrywt	1	17	20.	3.1	10.
Tetrachloro-M-Xylene		74.0	%					
Decachlorobiphenyl		59.9	%					

600 Technology Way
P.O. Box 540, Scarborough, ME 04070
Tel:(207) 874-2400 Fax:(207) 775-4029

http://www.katahdinlab.com

Katahdin
ANALYTICAL SERVICES

Accredited in accordance with nelac
Cert No E87604

Report of Analytical Results

Client: Tetra Tech NUS, Inc.
Lab ID: SD4692-13
Client ID: B185A1-SB4-0103
Project: CTO WE19 NS Newport, Soil
SDG: WE19-6

Sample Date: 28-JUL-10
Received Date: 03-AUG-10
Extract Date: 09-AUG-10
Extracted By: WS
Extraction Method: SW846 3550
Lab Prep Batch: WG80690

Analysis Date: 12-AUG-10
Analyst: RCT
Analysis Method: SW846 8082
Matrix: SL
% Solids: 83.
Report Date: 23-AUG-10

Compound	Qualifier	Result	Units	Dilution	LOQ	ADJ LOQ	ADJ MDL	ADJ LOD
Aroclor-1016	U	10.	ug/Kgdrywt	1	17	20.	7.0	10.
Aroclor-1221	U	10.	ug/Kgdrywt	1	17	20.	9.3	10.
Aroclor-1232	U	12.	ug/Kgdrywt	1	17	20.	11.	12.
Aroclor-1242	U	10.	ug/Kgdrywt	1	17	20.	6.8	10.
Aroclor-1248	U	10.	ug/Kgdrywt	1	17	20.	7.2	10.
Aroclor-1254	U	10.	ug/Kgdrywt	1	17	20.	5.5	10.
Aroclor-1260	U	10.	ug/Kgdrywt	1	17	20.	7.0	10.
Aroclor-1268	U	10.	ug/Kgdrywt	1	17	20.	3.0	10.
Tetrachloro-M-Xylene		75.0	%					
Decachlorobiphenyl		59.2	%					

600 Technology Way
P.O. Box 540, Scarborough, ME 04070
Tel:(207) 874-2400 Fax:(207) 775-4029

http://www.katahdinlab.com

Katahdin
ANALYTICAL SERVICES

Cert No E87604

Report of Analytical Results

Client: Tetra Tech NUS, Inc.
Lab ID: SD4692-15
Client ID: B185A1-SB4-0507
Project: CTO WE19 NS Newport, Soi
SDG: WE19-6

Sample Date: 28-JUL-10
Received Date: 03-AUG-10
Extract Date: 09-AUG-10
Extracted By: WS
Extraction Method: SW846 3550
Lab Prep Batch: WG80690

Analysis Date: 12-AUG-10
Analyst: RCT
Analysis Method: SW846 8082
Matrix: SL
% Solids: 76.
Report Date: 23-AUG-10

Compound	Qualifier	Result	Units	Dilution	LOQ	ADJ LOQ	ADJ MDL	ADJ LOD
Aroclor-1016	U	10.	ug/Kgdrywt	1	17	21.	7.4	10.
Aroclor-1221	U	10.	ug/Kgdrywt	1	17	21.	9.8	10.
Aroclor-1232	U	12.	ug/Kgdrywt	1	17	21.	12.	12.
Aroclor-1242	U	10.	ug/Kgdrywt	1	17	21.	7.2	10.
Aroclor-1248	U	10.	ug/Kgdrywt	1	17	21.	7.6	10.
Aroclor-1254	U	10.	ug/Kgdrywt	1	17	21.	5.8	10.
Aroclor-1260	U	10.	ug/Kgdrywt	1	17	21.	7.4	10.
Aroclor-1268	U	10.	ug/Kgdrywt	1	17	21.	3.2	10.
Tetrachloro-M-Xylene		74.8	%					
Decachlorobiphenyl		61.4	%					

600 Technology Way
P.O. Box 540, Scarborough, ME 04070
Tel:(207) 874-2400 Fax:(207) 775-4029

http://www.katahdinlab.com

Report of Analytical Results

Client: Tetra Tech NUS, Inc.
Lab ID: SD4692-17RE
Client ID: B185A3-SB1-0103
Project: CTO WE19 NS Newport, Soi
SDG: WE19-6

Sample Date: 28-JUL-10
Received Date: 03-AUG-10
Extract Date: 17-AUG-10
Extracted By: WS
Extraction Method: SW846 3550
Lab Prep Batch: WG81042

Analysis Date: 18-AUG-10
Analyst: RCT
Analysis Method: SW846 8082
Matrix: SL
% Solids: 87.
Report Date: 24-AUG-10

Compound	Qualifier	Result	Units	Dilution	LOQ	ADJ LOQ	ADJ MDL	ADJ LOD
Aroclor-1016	U	9.4	ug/Kgdrywt	1	17	19.	6.6	9.4
Aroclor-1221	U	9.4	ug/Kgdrywt	1	17	19.	8.8	9.4
Aroclor-1232	U	11.	ug/Kgdrywt	1	17	19.	10.	11.
Aroclor-1242	U	9.4	ug/Kgdrywt	1	17	19.	6.4	9.4
Aroclor-1248	U	9.4	ug/Kgdrywt	1	17	19.	6.8	9.4
Aroclor-1254	U	9.4	ug/Kgdrywt	1	17	19.	5.2	9.4
Aroclor-1260	U	9.4	ug/Kgdrywt	1	17	19.	6.6	9.4
Aroclor-1268	U	9.4	ug/Kgdrywt	1	17	19.	2.9	9.4
Tetrachloro-M-Xylene		96.8	%					
Decachlorobiphenyl		88.0	%					

600 Technology Way
P.O. Box 540, Scarborough, ME 04070
Tel:(207) 874-2400 Fax:(207) 775-4029

http://www.katahdinlab.com

Katahdin
ANALYTICAL SERVICES

ACCREDITED IN ACCORDANCE WITH nelac
Cert No E87604

Report of Analytical Results

Client: Tetra Tech NUS, Inc.
Lab ID: SD4692-19
Client ID: B185A3-SB1-0305
Project: CTO WE19 NS Newport, Soi
SDG: WE19-6

Sample Date: 28-JUL-10
Received Date: 03-AUG-10
Extract Date: 09-AUG-10
Extracted By: WS
Extraction Method: SW846 3550
Lab Prep Batch: WG80690

Analysis Date: 12-AUG-10
Analyst: RCT
Analysis Method: SW846 8082
Matrix: SL
% Solids: 87.
Report Date: 23-AUG-10

Compound	Qualifier	Result	Units	Dilution	LOQ	ADJ LOQ	ADJ MDL	ADJ LOD
Aroclor-1016	U	9.8	ug/Kgdrywt	1	17	20.	6.9	9.8
Aroclor-1221	U	9.8	ug/Kgdrywt	1	17	20.	9.1	9.8
Aroclor-1232	U	11.	ug/Kgdrywt	1	17	20.	11.	11.
Aroclor-1242	U	9.8	ug/Kgdrywt	1	17	20.	6.6	9.8
Aroclor-1248	U	9.8	ug/Kgdrywt	1	17	20.	7.0	9.8
Aroclor-1254	U	9.8	ug/Kgdrywt	1	17	20.	5.4	9.8
Aroclor-1260	U	9.8	ug/Kgdrywt	1	17	20.	6.9	9.8
Aroclor-1268	U	9.8	ug/Kgdrywt	1	17	20.	3.0	9.8
Tetrachloro-M-Xylene		69.5	%					
Decachlorobiphenyl		63.6	%					

600 Technology Way
P.O. Box 540, Scarborough, ME 04070
Tel:(207) 874-2400 Fax:(207) 775-4029

Tetra Tech NUS **INTERNAL CORRESPONDENCE**

TO: **J. FORRELLI** **DATE:** **September 28, 2010**

FROM: **MEGAN CARSON** **COPIES:** **DV FILE**

SUBJECT: **INORGANIC DATA VALIDATION- METALS**
CTO WE19, NAVSTA NEWPORT
SAMPLE DELIVERY GROUP (SDG) CTOWE19-6

SAMPLES: 10/Soil/

B185A1-SB1-0103	B185A1-SB1-0708	B185A1-SB2-0103
B185A1-SB2-0305	B185A1-SB3-0103	B185A1-SB3-0305
B185A1-SB4-0103	B185A1-SB4-0507	B185A3-SB1-0103
B185A3-SB1-0305		

1/Aqueous/
RB-DPT-072910

OVERVIEW

The sample set for CTO WE19, NAVSTA Newport, SDG CTOWE19-6, consists of ten (10) soil environmental samples and one (1) rinsate blank. This SDG contained no field duplicate pairs.

All samples were analyzed for TAL metals. The samples were collected by Tetra Tech NUS on July 27th, 28th, 29th 2010 and analyzed by Katahdin Analytical Services. All metals analyses except arsenic and thallium were conducted by EPA method 6010A. Arsenic and thallium analyses were conducted by EPA method 6020. Mercury analyses were conducted by EPA method 7470/7471. Tier 2 data validation was performed on all analyses. The data contained in this SDG were validated with regard to the following parameters:

* • Data Completeness
* • Holding Times
* • Initial and Continuing Calibrations
• Laboratory Method / Preparation Blanks
• ICP Interference Analysis
* • Laboratory Control Sample Results
* • Matrix Spike Results
* • Laboratory Duplicate Results
* • ICP-MS Internal Standard Recoveries
* • ICP Serial Dilution Results
* • Detection Limits
* • Analyte Quantitation

The asterisk (*) indicates that all quality control criteria were met for this parameter. Qualified (if applicable) analytical results are summarized in Appendix A. Results as reported by the laboratory are presented in Appendix B. Appendix C contains Region I worksheets, and Appendix D contains the documentation to support the findings as discussed in this data validation report. The attached Table summarizes the validation qualifications which are based on the following information:

TO: JFORRELLI
SDG: CTOWE19-6
DATE: 9/28/2010

METALS:

The following analytes were detected in the preparation blank at the following maximum concentrations:

Analytes	Maximum Concentration	Action Level
Arsenic [1]	2.3 ug/L	11.5 ug/L
Calcium [1]	7.103 ug/L	35.5 ug/L
Iron [1]	7.96 ug/L	39.8 ug/L
Magnesium [1]	19.71 ug/L	98.5 ug/L
Zinc [1]	0.76 ug/L	3.8 ug/L
Calcium [2]	4.98 mg/kg	24.9 mg/kg
Chromium [2]	0.046 mg/kg	0.23 mg/kg
Copper [2]	0.11 mg/kg	0.55 mg/kg
Iron [2]	4.09 mg/kg	20.4 mg/kg
Magnesium [2]	1.95 mg/kg	9.7 mg/kg
Manganese [2]	0.089 mg/kg	0.44 mg/kg
Potassium [2]	10.7 mg/kg	53.5 mg/kg
Sodium [2]	5.19 mg/kg	25.9 mg/kg
Zinc [2]	0.10 mg/kg	0.5 mg/kg
Barium [3]	0.035 mg/kg	0.17 mg/kg
Calcium [3]	4.71 mg/kg	23.5 mg/kg
Chromium [3]	0.054 mg/kg	0.27 mg/kg
Iron [3]	6.03 mg/kg	30.1 mg/kg
Magnesium [3]	1.92 mg/kg	9.6 mg/kg
Manganese [3]	0.085 mg/kg	0.42 mg/kg
Potassium [3]	11.29 mg/kg	56.4 mg/kg
Sodium [3]	5.78 mg/kg	28.9 mg/kg
Zinc [3]	0.19 mg/kg	0.95 mg/kg

[1] Maximum concentration found in preparation blank affecting sample RB-DPT-072910.
[2] Maximum concentration found in preparation blank (batch AH05ICSO) affecting samples B185A1-SB1-0103, B185A1-SB1-0708, B185A1-SB2-0305, B185A1-SB2-0305, B185A1-SB3-0103, B185A1-SB3-0305, B185A1-SB4-0103, and B185A1-SB4-0507.
[3] Maximum concentration found in preparation blank (batch AH06ICSO) affecting samples B185A1-SB1-0103 and B185A1-SB2-0103.

Action levels of 5X the maximum contaminant concentration for were established to evaluate blank contamination. Dilution factors and sample aliquots were taken into consideration during the application of all action levels. Positive results less than the blank action level were qualified as non-detect (U). Rinsate blank results were not qualified due to method blank contamination.

The following analytes were detected in the method blank at the following maximum concentrations affecting all samples:

Analytes	Maximum Concentration	Action Level
Beryllium	0.22 ug/L	0.11 mg/kg
Cadmium	0.23 ug/L	0.11 mg/kg
Molybdenum	1.46 ug/L	0.73 mg/kg
Vanadium	0.5 ug/L	0.25 mg/kg

TO: JFORRELLI
SDG: CTOWE19-6
DATE: 9/28/2010

Action levels of 5X the maximum contaminant concentration for were established to evaluate blank contamination. Dilution factors and sample aliquots were taken into consideration during the application of all action levels. Positive results less than the blank action level were qualified as non-detect (U).

The interfering analyte iron was present in all soil samples at concentrations comparable to the concentrations of iron in the interference check sample (ICS) solution. Several analytes namely, barium, cadmium, chromium, cobalt, copper, molybdenum, nickel, silver, vanadium and zinc were present in the ICS solution at a concentration that exceeded 2X the absolute value of the method detection limit (MDL). Interference effects exist for cadmium, molybdenum, silver in samples B185A1-SB1-0103, B185A1-SB1-0708, B185A1-SB2-0103, B185A1-SB2-0305, B185A1-SB3-0103, B185A1-SB3-0305, B185A1-SB4-0103, B185A1-SB4-0507, B185A3-SB1-0103, and B185A3-SB1-0305. Non-detected results for cadmium were qualified as estimated (UJ) except for samples B185A1-SB1-0103 and B185A1-SB2-0103 which were qualified for blank contamination. Non-detected molybdenum results for samples B185A1-SB1-0708 and B185A1-SB2-0305 were qualified as estimated (UJ), all other sample results for molybdenum were qualified for blank contamination. All positive results for silver were qualified as estimated (J).

ADDITIONAL COMMENTS

Positive results greater than the MDL but less than the LOQ were qualified as estimated (J). Non-detected results were reported to the Limit of Detection (LOD).

All samples were analyzed at a 5X dilution for arsenic and thallium analyses.

The following samples were analyzed at dilutions to bring target analytes into linear calibration range increasing reporting limits for non-detects:

Sample ID	Dilution Factor	Compound
B185A1-SB1-0103	2X	All analytes except Hg, As, Tl
B185A1-SB1-0708	3X	All analytes except Hg, As, Tl
B185A1-SB2-0103	2X	All analytes except Hg, As, Tl
B185A1-SB2-0305	2X	All analytes except Hg, As, Tl
B185A1-SB3-0103	2X	All analytes except Hg, As, Tl
B185A1-SB3-0305	2X	All analytes except Hg, As, Tl
B185A1-SB4-0103	2X	All analytes except Hg, As, Tl
B185A1-SB4-0507	2X	All analytes except Hg, As, Tl

For sample B185A-SB4-0103 the time listed on the chain of custody and the bottle did not match. The time listed on the chain of custody was used.

EXECUTIVE SUMMARY

Laboratory Performance Issues: No issues were noted.

Other Factors Affecting Data Quality: ICP iron interference resulted in the qualification of cadmium, molybdenum, and silver in several samples.

The data for these analyses were reviewed with reference to the EPA Region I, "National Functional Guidelines for Inorganic Review", (11/08) and the Department of Defense (DoD) document entitled "Quality Systems Manual (QSM) for Environmental Laboratories", January 2006.

TO: JFORRELLI
SDG: CTOWE19-6
DATE: 9/28/2010

Megan Carson

Tetra Tech NUS
Megan Carson
Chemist 1/ Data Validator

TetraTech NUS
Joseph A. Samchuck
Data Validation Quality Assurance Officer

Attachments:

Appendix A – Qualified Analytical Results
Appendix B – Results as Reported by the Laboratory
Appendix C – Regional Worksheets
Appendix D – Support Documentation

APPENDIX A

QUALIFIED ANALYTICAL RESULTS

Data Validation Qualifier Codes:

A	=	Lab Blank Contamination
B	=	Field Blank Contamination
C	=	Calibration Noncompliance (e.g. % RSDs, %Ds, ICVs, CCVs, RRFs, etc.)
C01	=	GC/MS Tuning Noncompliance
D	=	MS/MSD Recovery Noncompliance
E	=	LCS/LCSD Recovery Noncompliance
F	=	Lab Duplicate Imprecision
G	=	Field Duplicate Imprecision
H	=	Holding Time Exceedance
I	=	ICP Serial Dilution Noncompliance
J	=	GFAA PDS - GFAA MSA's $r < 0.995$
K	=	ICP Interference - includes ICS % R Noncompliance
L	=	Instrument Calibration Range Exceedance
M	=	Sample Preservation Noncompliance
N	=	Internal Standard Noncompliance
N01	=	Internal Standard Recovery Noncompliance Dioxins
N02	=	Recovery Standard Noncompliance Dioxins
N03	=	Clean-up Standard Noncompliance Dioxins
O	=	Poor Instrument Performance (e.g. base-line drifting)
P	=	Uncertainty near detection limit (< 2 x IDL for inorganics and <CRQL for organics)
Q	=	Other problems (can be any number of issues; e.g. poor chromatography,interferences, etc.)
R	=	Surrogates Recovery Noncompliance
S	=	Pesticide/PCB Resolution
T	=	% Breakdown Noncompliance for DDT and Endrin
U	=	% Difference between columns/detectors >25% for positive results determined via GC/HPLC
V	=	Non-linear calibrations; correlation coefficient $r < 0.995$
W	=	EMPC result
X	=	Signal to noise response drop
Y	=	Percent solids <30%
Z	=	Uncertainty at 2 sigma deviation is greater than sample activity

PROJ_NO: 02124	NSAMPLE	RB-DPT-072910
SDG: WE19-6	LAB_ID	SD4621-001
FRACTION: M	SAMP_DATE	7/29/2010
MEDIA: WATER	QC_TYPE	NM
	UNITS	UG/L
	PCT_SOLIDS	0.0
	DUP_OF	

PARAMETER	RESULT	VQL	QLCD
ALUMINUM	100	U	
ANTIMONY	5	U	
ARSENIC	21.7		
BARIUM	8.2		
BERYLLIUM	0.5	U	
CADMIUM	0.5	U	
CALCIUM	35900		
CHROMIUM	1.6	J	P
COBALT	4	U	
COPPER	26.1		
IRON	1380		
LEAD	1.9	J	P
MAGNESIUM	13000		
MANGANESE	90.6		
MERCURY	0.1	U	
MOLYBDENUM	1.7	J	P
NICKEL	4	U	
POTASSIUM	3440		
SELENIUM	7	U	
SILVER	4	U	
SODIUM	16200		
THALLIUM	0.4	U	
VANADIUM	1.2	J	P
ZINC	36		

PROJ_NO: 02124	NSAMPLE	B185A1-SB1-0103			B185A1-SB1-0708			B185A1-SB2-0103			B185A1-SB2-0305		
SDG: WE19-6	LAB_ID	SD4692-001			SD4692-003			SD4692-005			SD4692-007		
FRACTION: M	SAMP_DATE	7/28/2010			7/28/2010			7/28/2010			7/28/2010		
MEDIA: SOIL	QC_TYPE	NM			NM			NM			NM		
	UNITS	MG/KG			MG/KG			MG/KG			MG/KG		
	PCT_SOLIDS	88.0			92.8			86.4			84.8		
	DUP_OF												
PARAMETER		RESULT	VQL	QLCD	RESULT	VQL	QLCD	RESULT	VQL	QLCD	RESULT	VQL	QLCD
ALUMINUM		12000			21000			11200			15200		
ANTIMONY		1	U		0.96	U		1.1	U		0.78	U	
ARSENIC		24.6			2.8			18.2			11.5		
BARIUM		20.5			12.5			23.3			20.8		
BERYLLIUM		0.43	J	P	0.31	J	P	0.39	J	P	0.35	J	P
CADMIUM		0.18	U	A	0.096	UJ	K	0.2	U	A	0.078	UJ	K
CALCIUM		845			2120			630			650		
CHROMIUM		14.4			23.5			13.5			18		
COBALT		12.8			23.8			11.4			12.8		
COPPER		17			18.3			15.4			10.1		
IRON		26500			40700			21500			31500		
LEAD		12.9			16.7			13.4			9.5		
MAGNESIUM		3040			7750			2680			4300		
MANGANESE		327			358			162			349		
MERCURY		0.014	J	P	0.017	U		0.01	J	P	0.01	J	P
MOLYBDENUM		0.52	U	A	1.5	UJ	K	0.24	U	A	1.2	UJ	K
NICKEL		21.9			38.2			18.7			25.1		
POTASSIUM		412			299			500			292		
SELENIUM		1.4	U		1.3	J	P	1.5	U		1.5	J	P
SILVER		0.11	J	KP	0.39	J	KP	0.22	J	KP	0.32	J	KP
SODIUM		45.1	U	A	39.1	U	A	52	U	A	70.7	J	P
THALLIUM		0.06	J	P	0.01	J	P	0.06	J	P	0.05	J	P
VANADIUM		17.5			19.2			18.4			19.6		
ZINC		54.4			81.9			70.4			70.8		

PROJ_NO: 02124	NSAMPLE	B185A1-SB3-0103			B185A1-SB3-0305			B185A1-SB4-0103			B185A1-SB4-0507		
SDG: WE19-6	LAB_ID	SD4692-009			SD4692-011			SD4692-013			SD4692-015		
FRACTION: M	SAMP_DATE	7/28/2010			7/28/2010			7/28/2010			7/28/2010		
MEDIA: SOIL	QC_TYPE	NM			NM			NM			NM		
	UNITS	MG/KG			MG/KG			MG/KG			MG/KG		
	PCT_SOLIDS	86.1			82.2			83.1			76.1		
	DUP_OF												
PARAMETER		RESULT	VQL	QLCD	RESULT	VQL	QLCD	RESULT	VQL	QLCD	RESULT	VQL	QLCD
ALUMINUM		12100			11700			13000			13200		
ANTIMONY		0.77	U		0.61	U		0.72	U		0.92	U	
ARSENIC		27.3			8.8			13.4			9.5		
BARIUM		23.3			22.2			30			43.1		
BERYLLIUM		0.45	J	P	0.35	J	P	0.38	J	P	0.6	J	P
CADMIUM		0.077	UJ	K	0.061	UJ	K	0.072	UJ	K	0.092	UJ	K
CALCIUM		728			640			738			1270		
CHROMIUM		13.6			12.7			16.5			18.4		
COBALT		12.5			6.5			10.8			15.8		
COPPER		20.1			3.4			10			14		
IRON		25400			18800			26500			27900		
LEAD		13			8.4			12.3			12.6		
MAGNESIUM		2840			2260			3320			3480		
MANGANESE		295			196			887			1100		
MERCURY		0.02	J	P	0.02	J	P	0.02	J	P	0.021	U	
MOLYBDENUM		0.38	U	A	0.53	U	A	1.1	U	A	1.3	U	A
NICKEL		21.7			12.1			17.1			20.8		
POTASSIUM		481			459			448			672		
SELENIUM		1.2	J	P	1.4			0.96	J	P	0.96	J	P
SILVER		0.48	J	KP	0.31	J	KP	0.39	J	KP	0.69	J	KP
SODIUM		64	J	P	102	J	P	46.2	U	A	66.2	J	P
THALLIUM		0.06	J	P	0.08	J	P	0.07	J	P	0.1	J	P
VANADIUM		19			19.8			23.4			22.4		
ZINC		52.6			38.8			48.8			50.6		

PROJ_NO: 02124	NSAMPLE	B185A3-SB1-0103			B185A3-SB1-0305		
SDG: WE19-6	LAB_ID	SD4692-017			SD4692-019		
FRACTION: M	SAMP_DATE	7/28/2010			7/28/2010		
MEDIA: SOIL	QC_TYPE	NM			NM		
	UNITS	MG/KG			MG/KG		
	PCT_SOLIDS	86.9			86.8		
	DUP_OF						
PARAMETER		RESULT	VQL	QLCD	RESULT	VQL	QLCD
ALUMINUM		11600			11700		
ANTIMONY		0.41	U		0.35	U	
ARSENIC		7			4.6		
BARIUM		30			33.5		
BERYLLIUM		0.5			0.4		
CADMIUM		0.041	UJ	K	0.035	UJ	K
CALCIUM		664			1430		
CHROMIUM		11.6			12.4		
COBALT		6.5			7.2		
COPPER		6			13.6		
IRON		16700			15900		
LEAD		9.5			7.6		
MAGNESIUM		1890			2690		
MANGANESE		154			214		
MERCURY		0.03	J	P	0.018	U	
MOLYBDENUM		0.33	U	A	0.22	U	A
NICKEL		12.3			16.4		
POTASSIUM		428			690		
SELENIUM		1.4			0.51	J	P
SILVER		0.34	J	KP	0.08	J	KP
SODIUM		42.5	J	P	46.6	J	P
THALLIUM		0.09	J	P	0.07	J	P
VANADIUM		18.1			18.2		
ZINC		43.4			40.5		

APPENDIX B

RESULTS AS REPORTED BY THE LABORATORY

INORGANIC ANALYSIS DATA SHEET

Lab Name: Katahdin Analytical Services **Client Field ID:** RB-DPT-072910

Matrix: WATER **SDG Name:** WE19-6

Percent Solids: 0.00 **Lab Sample ID:** SD4621-001

Concentration Units : ug/L

CAS No.	Analyte	Concentration	C	Q	M	DF	ADJUSTED LOQ	MDL	LOD
7429-90-5	ALUMINUM, TOTAL	100	U		P	1	300	15.20	100
7440-36-0	ANTIMONY, TOTAL	5.0	U		P	1	8.0	1.50	5.0
7440-38-2	ARSENIC, TOTAL	21.7			MS	5	5.0	0.80	4.0
7440-39-3	BARIUM, TOTAL	8.2			P	1	5.0	0.44	3.0
7440-41-7	BERYLLIUM, TOTAL	0.50	U		P	1	5.0	0.04	0.50
7440-43-9	CADMIUM, TOTAL	0.50	U		P	1	10	0.04	0.50
7440-70-2	CALCIUM, TOTAL	35900			P	1	100	5.79	80
7440-47-3	CHROMIUM, TOTAL	1.6	J		P	1	15	0.32	4.0
7440-48-4	COBALT, TOTAL	4.0	U		P	1	30	0.28	4.0
7440-50-8	COPPER, TOTAL	26.1			P	1	25	0.48	10
7439-89-6	IRON, TOTAL	1380			P	1	100	6.27	80
7439-92-1	LEAD, TOTAL	1.9	J		P	1	5.0	0.73	4.0
7439-95-4	MAGNESIUM, TOTAL	13000			P	1	100	4.83	80
7439-96-5	MANGANESE, TOTAL	90.6			P	1	5.0	0.37	4.0
7439-97-6	MERCURY, TOTAL	0.10	U		CV	1	0.20	0.04	0.10
7439-98-7	MOLYBDENUM, TOTAL	1.7	J		P	1	10	0.92	8.0
7440-02-0	NICKEL, TOTAL	4.0	U		P	1	40	0.29	4.0
7440-09-7	POTASSIUM, TOTAL	3440			P	1	1000	105.00	500
7782-49-2	SELENIUM, TOTAL	7.0	U		P	1	10	3.67	7.0
7440-22-4	SILVER, TOTAL	4.0	U		P	1	15	0.48	4.0
7440-23-5	SODIUM, TOTAL	16200			P	1	1000	34.40	500
7440-28-0	THALLIUM, TOTAL	0.40	U		MS	5	2.0	0.05	0.40
7440-62-2	VANADIUM, TOTAL	1.2	J		P	1	25	0.39	4.0
7440-66-6	ZINC, TOTAL	36.0			P	1	25	0.50	10

Bottle ID: A

Comments:

INORGANIC ANALYSIS DATA SHEET

Lab Name: Katahdin Analytical Services **Client Field ID:** B185A1-SB1-0103

Matrix: SOIL **SDG Name:** WE19-6

Percent Solids: 88.0 **Lab Sample ID:** SD4692-001

Concentration Units : mg/Kgdrywt

CAS No.	Analyte	Concentration	C	Q	M	DF	ADJUSTED LOQ	MDL	LOD
7429-90-5	ALUMINUM, TOTAL	12000			P	2	60	3.09	20
7440-36-0	ANTIMONY, TOTAL	1.0	U		P	2	1.6	0.22	1.0
7440-38-2	ARSENIC, TOTAL	24.6			MS	5	0.50	0.11	0.40
7440-39-3	BARIUM, TOTAL	20.5			P	2	1.0	0.05	0.60
7440-41-7	BERYLLIUM, TOTAL	0.43	J		P	2	1.0	0.02	0.10
7440-43-9	CADMIUM, TOTAL	0.18	J		P	2	2.0	0.02	0.10
7440-70-2	CALCIUM, TOTAL	845			P	2	20	2.11	16
7440-47-3	CHROMIUM, TOTAL	14.4			P	2	3.0	0.06	0.80
7440-48-4	COBALT, TOTAL	12.8			P	2	6.0	0.04	0.80
7440-50-8	COPPER, TOTAL	17.0			P	2	5.0	0.14	2.0
7439-89-6	IRON, TOTAL	26500			P	2	20	0.64	16
7439-92-1	LEAD, TOTAL	12.9			P	2	1.0	0.21	0.80
7439-95-4	MAGNESIUM, TOTAL	3040			P	2	20	0.72	16
7439-96-5	MANGANESE, TOTAL	327			P	2	1.0	0.12	0.80
7439-97-6	MERCURY, TOTAL	0.01	J		CV	1	0.036	0.01	0.018
7439-98-7	MOLYBDENUM, TOTAL	0.52	J		P	2	2.0	0.10	1.6
7440-02-0	NICKEL, TOTAL	21.9			P	2	8.0	0.11	0.80
7440-09-7	POTASSIUM, TOTAL	412			P	2	200	20.54	100
7782-49-2	SELENIUM, TOTAL	1.4	U		P	2	2.0	0.78	1.4
7440-22-4	SILVER, TOTAL	0.11	J		P	2	3.0	0.10	0.80
7440-23-5	SODIUM, TOTAL	45.1	J		P	2	200	3.33	100
7440-28-0	THALLIUM, TOTAL	0.06	J		MS	5	0.20	0.01	0.040
7440-62-2	VANADIUM, TOTAL	17.5			P	2	5.0	0.07	0.80
7440-66-6	ZINC, TOTAL	54.4			P	2	5.0	0.13	2.0

Bottle ID: A

Comments:

INORGANIC ANALYSIS DATA SHEET

Lab Name: Katahdin Analytical Services **Client Field ID:** B185A1-SB1-0708

Matrix: SOIL **SDG Name:** WE19-6

Percent Solids: 92.8 **Lab Sample ID:** SD4692-003

Concentration Units : mg/Kgdrywt

CAS No.	Analyte	Concentration	C	Q	M	DF	ADJUSTED LOQ	MDL	LOD
7429-90-5	ALUMINUM, TOTAL	21000			P	3	57	2.97	19
7440-36-0	ANTIMONY, TOTAL	0.96	U		P	3	1.5	0.21	0.96
7440-38-2	ARSENIC, TOTAL	2.8			MS	5	0.32	0.07	0.26
7440-39-3	BARIUM, TOTAL	12.5			P	3	0.96	0.05	0.57
7440-41-7	BERYLLIUM, TOTAL	0.31	J		P	3	0.96	0.02	0.096
7440-43-9	CADMIUM, TOTAL	0.096	U		P	3	1.9	0.02	0.096
7440-70-2	CALCIUM, TOTAL	2120			P	3	19	2.03	15
7440-47-3	CHROMIUM, TOTAL	23.5			P	3	2.9	0.06	0.76
7440-48-4	COBALT, TOTAL	23.8			P	3	5.7	0.04	0.76
7440-50-8	COPPER, TOTAL	18.3			P	3	4.8	0.14	1.9
7439-89-6	IRON, TOTAL	40700			P	3	19	0.62	15
7439-92-1	LEAD, TOTAL	16.7			P	3	0.96	0.20	0.76
7439-95-4	MAGNESIUM, TOTAL	7750			P	3	19	0.69	15
7439-96-5	MANGANESE, TOTAL	358			P	3	0.96	0.11	0.76
7439-97-6	MERCURY, TOTAL	0.017	U		CV	1	0.033	0.01	0.017
7439-98-7	MOLYBDENUM, TOTAL	1.5	U		P	3	1.9	0.10	1.5
7440-02-0	NICKEL, TOTAL	38.2			P	3	7.6	0.10	0.76
7440-09-7	POTASSIUM, TOTAL	299			P	3	190	19.71	96
7782-49-2	SELENIUM, TOTAL	1.3	J		P	3	1.9	0.75	1.3
7440-22-4	SILVER, TOTAL	0.39	J		P	3	2.9	0.09	0.76
7440-23-5	SODIUM, TOTAL	39.1	J		P	3	190	3.19	96
7440-28-0	THALLIUM, TOTAL	0.01	J		MS	5	0.13	0.01	0.026
7440-62-2	VANADIUM, TOTAL	19.2			P	3	4.8	0.07	0.76
7440-66-6	ZINC, TOTAL	81.9			P	3	4.8	0.12	1.9

Bottle ID: B

Comments:

INORGANIC ANALYSIS DATA SHEET

Lab Name: Katahdin Analytical Services **Client Field ID:** B185A1-SB2-0103

Matrix: SOIL **SDG Name:** WE19-6

Percent Solids: 86.4 **Lab Sample ID:** SD4692-005

Concentration Units : mg/Kgdrywt

CAS No.	Analyte	Concentration	C	Q	M	DF	ADJUSTED LOQ	MDL	LOD
7429-90-5	ALUMINUM, TOTAL	11200			P	2	65	3.38	22
7440-36-0	ANTIMONY, TOTAL	1.1	U		P	2	1.7	0.24	1.1
7440-38-2	ARSENIC, TOTAL	18.2			MS	5	0.54	0.13	0.44
7440-39-3	BARIUM, TOTAL	23.3			P	2	1.1	0.06	0.65
7440-41-7	BERYLLIUM, TOTAL	0.39	J		P	2	1.1	0.02	0.11
7440-43-9	CADMIUM, TOTAL	0.20	J		P	2	2.2	0.02	0.11
7440-70-2	CALCIUM, TOTAL	630			P	2	22	2.31	17
7440-47-3	CHROMIUM, TOTAL	13.5			P	2	3.3	0.07	0.87
7440-48-4	COBALT, TOTAL	11.4			P	2	6.5	0.04	0.87
7440-50-8	COPPER, TOTAL	15.4			P	2	5.4	0.16	2.2
7439-89-6	IRON, TOTAL	21500			P	2	22	0.70	17
7439-92-1	LEAD, TOTAL	13.4			P	2	1.1	0.22	0.87
7439-95-4	MAGNESIUM, TOTAL	2680			P	2	22	0.79	17
7439-96-5	MANGANESE, TOTAL	162			P	2	1.1	0.13	0.87
7439-97-6	MERCURY, TOTAL	0.01	J		CV	1	0.037	0.01	0.019
7439-98-7	MOLYBDENUM, TOTAL	0.24	J		P	2	2.2	0.11	1.7
7440-02-0	NICKEL, TOTAL	18.7			P	2	8.7	0.12	0.87
7440-09-7	POTASSIUM, TOTAL	500			P	2	220	22.48	110
7782-49-2	SELENIUM, TOTAL	1.5	U		P	2	2.2	0.86	1.5
7440-22-4	SILVER, TOTAL	0.22	J		P	2	3.3	0.11	0.87
7440-23-5	SODIUM, TOTAL	52.0	J		P	2	220	3.64	110
7440-28-0	THALLIUM, TOTAL	0.06	J		MS	5	0.22	0.01	0.044
7440-62-2	VANADIUM, TOTAL	18.4			P	2	5.4	0.08	0.87
7440-66-6	ZINC, TOTAL	70.4			P	2	5.4	0.14	2.2

Bottle ID: A

Comments:

INORGANIC ANALYSIS DATA SHEET

Lab Name: Katahdin Analytical Services **Client Field ID:** B185A1-SB2-0305

Matrix: SOIL **SDG Name:** WE19-6

Percent Solids: 84.8 **Lab Sample ID:** SD4692-007

Concentration Units : mg/Kgdrywt

CAS No.	Analyte	Concentration	C	Q	M	DF	ADJUSTED LOQ	MDL	LOD
7429-90-5	ALUMINUM, TOTAL	15200			P	2	46	2.41	16
7440-36-0	ANTIMONY, TOTAL	0.78	U		P	2	1.2	0.17	0.78
7440-38-2	ARSENIC, TOTAL	11.5			MS	5	0.39	0.09	0.31
7440-39-3	BARIUM, TOTAL	20.8			P	2	0.78	0.04	0.46
7440-41-7	BERYLLIUM, TOTAL	0.35	J		P	2	0.78	0.01	0.078
7440-43-9	CADMIUM, TOTAL	0.078	U		P	2	1.6	0.01	0.078
7440-70-2	CALCIUM, TOTAL	650			P	2	16	1.64	12
7440-47-3	CHROMIUM, TOTAL	18.0			P	2	2.3	0.05	0.62
7440-48-4	COBALT, TOTAL	12.8			P	2	4.6	0.03	0.62
7440-50-8	COPPER, TOTAL	10.1			P	2	3.9	0.11	1.6
7439-89-6	IRON, TOTAL	31500			P	2	16	0.50	12
7439-92-1	LEAD, TOTAL	9.5			P	2	0.78	0.16	0.62
7439-95-4	MAGNESIUM, TOTAL	4300			P	2	16	0.56	12
7439-96-5	MANGANESE, TOTAL	349			P	2	0.78	0.09	0.62
7439-97-6	MERCURY, TOTAL	0.01	J		CV	1	0.039	0.01	0.020
7439-98-7	MOLYBDENUM, TOTAL	1.2	U		P	2	1.6	0.08	1.2
7440-02-0	NICKEL, TOTAL	25.1			P	2	6.2	0.08	0.62
7440-09-7	POTASSIUM, TOTAL	292			P	2	160	15.98	78
7782-49-2	SELENIUM, TOTAL	1.5	J		P	2	1.6	0.61	1.1
7440-22-4	SILVER, TOTAL	0.32	J		P	2	2.3	0.08	0.62
7440-23-5	SODIUM, TOTAL	70.7	J		P	2	160	2.59	78
7440-28-0	THALLIUM, TOTAL	0.05	J		MS	5	0.16	0.01	0.031
7440-62-2	VANADIUM, TOTAL	19.6			P	2	3.9	0.05	0.62
7440-66-6	ZINC, TOTAL	70.8			P	2	3.9	0.10	1.6

Bottle ID: A

Comments:

INORGANIC ANALYSIS DATA SHEET

Lab Name: Katahdin Analytical Services **Client Field ID:** B185A1-SB3-0103

Matrix: SOIL **SDG Name:** WE19-6

Percent Solids: 86.1 **Lab Sample ID:** SD4692-009

Concentration Units : mg/Kgdrywt

CAS No.	Analyte	Concentration	C	Q	M	DF	ADJUSTED LOQ	ADJUSTED MDL	ADJUSTED LOD
7429-90-5	ALUMINUM, TOTAL	12100			P	2	46	2.40	15
7440-36-0	ANTIMONY, TOTAL	0.77	U		P	2	1.2	0.17	0.77
7440-38-2	ARSENIC, TOTAL	27.3			MS	5	0.39	0.09	0.31
7440-39-3	BARIUM, TOTAL	23.3			P	2	0.77	0.04	0.46
7440-41-7	BERYLLIUM, TOTAL	0.45	J		P	2	0.77	0.01	0.077
7440-43-9	CADMIUM, TOTAL	0.077	U		P	2	1.5	0.01	0.077
7440-70-2	CALCIUM, TOTAL	728			P	2	15	1.64	12
7440-47-3	CHROMIUM, TOTAL	13.6			P	2	2.3	0.05	0.62
7440-48-4	COBALT, TOTAL	12.5			P	2	4.6	0.03	0.62
7440-50-8	COPPER, TOTAL	20.1			P	2	3.9	0.11	1.5
7439-89-6	IRON, TOTAL	25400			P	2	15	0.50	12
7439-92-1	LEAD, TOTAL	13.0			P	2	0.77	0.16	0.62
7439-95-4	MAGNESIUM, TOTAL	2840			P	2	15	0.56	12
7439-96-5	MANGANESE, TOTAL	295			P	2	0.77	0.09	0.62
7439-97-6	MERCURY, TOTAL	0.02	J		CV	1	0.036	0.01	0.018
7439-98-7	MOLYBDENUM, TOTAL	0.38	J		P	2	1.5	0.08	1.2
7440-02-0	NICKEL, TOTAL	21.7			P	2	6.2	0.08	0.62
7440-09-7	POTASSIUM, TOTAL	481			P	2	150	15.96	77
7782-49-2	SELENIUM, TOTAL	1.2	J		P	2	1.5	0.61	1.1
7440-22-4	SILVER, TOTAL	0.48	J		P	2	2.3	0.08	0.62
7440-23-5	SODIUM, TOTAL	64.0	J		P	2	150	2.59	77
7440-28-0	THALLIUM, TOTAL	0.06	J		MS	5	0.15	0.01	0.031
7440-62-2	VANADIUM, TOTAL	19.0			P	2	3.9	0.05	0.62
7440-66-6	ZINC, TOTAL	52.6			P	2	3.9	0.10	1.5

Bottle ID: B

Comments:

INORGANIC ANALYSIS DATA SHEET

Lab Name: Katahdin Analytical Services **Client Field ID:** B185A1-SB3-0305

Matrix: SOIL **SDG Name:** WE19-6

Percent Solids: 82.2 **Lab Sample ID:** SD4692-011

Concentration Units : mg/Kgdrywt

CAS No.	Analyte	Concentration	C	Q	M	DF	ADJUSTED LOQ	MDL	LOD
7429-90-5	ALUMINUM, TOTAL	11700			P	2	37	1.90	12
7440-36-0	ANTIMONY, TOTAL	0.61	U		P	2	0.98	0.14	0.61
7440-38-2	ARSENIC, TOTAL	8.8			MS	5	0.31	0.07	0.24
7440-39-3	BARIUM, TOTAL	22.2			P	2	0.61	0.03	0.37
7440-41-7	BERYLLIUM, TOTAL	0.35	J		P	2	0.61	0.01	0.061
7440-43-9	CADMIUM, TOTAL	0.061	U		P	2	1.2	0.01	0.061
7440-70-2	CALCIUM, TOTAL	640			P	2	12	1.30	9.8
7440-47-3	CHROMIUM, TOTAL	12.7			P	2	1.8	0.04	0.49
7440-48-4	COBALT, TOTAL	6.5			P	2	3.7	0.02	0.49
7440-50-8	COPPER, TOTAL	3.4			P	2	3.1	0.09	1.2
7439-89-6	IRON, TOTAL	18800			P	2	12	0.40	9.8
7439-92-1	LEAD, TOTAL	8.4			P	2	0.61	0.13	0.49
7439-95-4	MAGNESIUM, TOTAL	2260			P	2	12	0.45	9.8
7439-96-5	MANGANESE, TOTAL	196			P	2	0.61	0.07	0.49
7439-97-6	MERCURY, TOTAL	0.02	J		CV	1	0.034	0.01	0.017
7439-98-7	MOLYBDENUM, TOTAL	0.53	J		P	2	1.2	0.06	0.98
7440-02-0	NICKEL, TOTAL	12.1			P	2	4.9	0.07	0.49
7440-09-7	POTASSIUM, TOTAL	459			P	2	120	12.65	61
7782-49-2	SELENIUM, TOTAL	1.4			P	2	1.2	0.48	0.86
7440-22-4	SILVER, TOTAL	0.31	J		P	2	1.8	0.06	0.49
7440-23-5	SODIUM, TOTAL	102	J		P	2	120	2.05	61
7440-28-0	THALLIUM, TOTAL	0.08	J		MS	5	0.12	0.01	0.024
7440-62-2	VANADIUM, TOTAL	19.8			P	2	3.1	0.04	0.49
7440-66-6	ZINC, TOTAL	38.8			P	2	3.1	0.08	1.2

Bottle ID: B

Comments:

INORGANIC ANALYSIS DATA SHEET

Lab Name: Katahdin Analytical Services **Client Field ID:** B185A1-SB4-0103

Matrix: SOIL **SDG Name:** WE19-6

Percent Solids: 83.1 **Lab Sample ID:** SD4692-013

Concentration Units : mg/Kgdrywt

CAS No.	Analyte	Concentration	C	Q	M	DF	ADJUSTED LOQ	MDL	LOD
7429-90-5	ALUMINUM, TOTAL	13000			P	2	44	2.25	14
7440-36-0	ANTIMONY, TOTAL	0.72	U		P	2	1.2	0.16	0.72
7440-38-2	ARSENIC, TOTAL	13.4			MS	5	0.36	0.08	0.29
7440-39-3	BARIUM, TOTAL	30.0			P	2	0.72	0.04	0.44
7440-41-7	BERYLLIUM, TOTAL	0.38	J		P	2	0.72	0.01	0.072
7440-43-9	CADMIUM, TOTAL	0.072	U		P	2	1.4	0.01	0.072
7440-70-2	CALCIUM, TOTAL	738			P	2	14	1.54	12
7440-47-3	CHROMIUM, TOTAL	16.5			P	2	2.2	0.05	0.58
7440-48-4	COBALT, TOTAL	10.8			P	2	4.4	0.03	0.58
7440-50-8	COPPER, TOTAL	10			P	2	3.6	0.10	1.4
7439-89-6	IRON, TOTAL	26500			P	2	14	0.47	12
7439-92-1	LEAD, TOTAL	12.3			P	2	0.72	0.15	0.58
7439-95-4	MAGNESIUM, TOTAL	3320			P	2	14	0.53	12
7439-96-5	MANGANESE, TOTAL	887			P	2	0.72	0.08	0.58
7439-97-6	MERCURY, TOTAL	0.02	J		CV	1	0.035	0.01	0.018
7439-98-7	MOLYBDENUM, TOTAL	1.1	J		P	2	1.4	0.07	1.2
7440-02-0	NICKEL, TOTAL	17.1			P	2	5.8	0.08	0.58
7440-09-7	POTASSIUM, TOTAL	448			P	2	140	14.94	72
7782-49-2	SELENIUM, TOTAL	0.96	J		P	2	1.4	0.57	1.0
7440-22-4	SILVER, TOTAL	0.39	J		P	2	2.2	0.07	0.58
7440-23-5	SODIUM, TOTAL	46.2	J		P	2	140	2.42	72
7440-28-0	THALLIUM, TOTAL	0.07	J		MS	5	0.14	0.01	0.029
7440-62-2	VANADIUM, TOTAL	23.4			P	2	3.6	0.05	0.58
7440-66-6	ZINC, TOTAL	48.8			P	2	3.6	0.09	1.4

Bottle ID: A

Comments:

INORGANIC ANALYSIS DATA SHEET

Lab Name: Katahdin Analytical Services **Client Field ID:** B185A1-SB4-0507

Matrix: SOIL **SDG Name:** WE19-6

Percent Solids: 76.1 **Lab Sample ID:** SD4692-015

Concentration Units : mg/Kgdrywt

CAS No.	Analyte	Concentration	C	Q	M	DF	ADJUSTED LOQ	MDL	LOD
7429-90-5	ALUMINUM, TOTAL	13200			P	2	56	2.87	18
7440-36-0	ANTIMONY, TOTAL	0.92	U		P	2	1.5	0.21	0.92
7440-38-2	ARSENIC, TOTAL	9.5			MS	5	0.46	0.11	0.37
7440-39-3	BARIUM, TOTAL	43.1			P	2	0.92	0.05	0.56
7440-41-7	BERYLLIUM, TOTAL	0.60	J		P	2	0.92	0.02	0.092
7440-43-9	CADMIUM, TOTAL	0.092	U		P	2	1.8	0.01	0.092
7440-70-2	CALCIUM, TOTAL	1270			P	2	18	1.96	15
7440-47-3	CHROMIUM, TOTAL	18.4			P	2	2.8	0.06	0.74
7440-48-4	COBALT, TOTAL	15.8			P	2	5.6	0.04	0.74
7440-50-8	COPPER, TOTAL	14.0			P	2	4.6	0.13	1.8
7439-89-6	IRON, TOTAL	27900			P	2	18	0.60	15
7439-92-1	LEAD, TOTAL	12.6			P	2	0.92	0.19	0.74
7439-95-4	MAGNESIUM, TOTAL	3480			P	2	18	0.67	15
7439-96-5	MANGANESE, TOTAL	1100			P	2	0.92	0.11	0.74
7439-97-6	MERCURY, TOTAL	0.021	U		CV	1	0.042	0.01	0.021
7439-98-7	MOLYBDENUM, TOTAL	1.3	J		P	2	1.8	0.09	1.5
7440-02-0	NICKEL, TOTAL	20.8			P	2	7.4	0.10	0.74
7440-09-7	POTASSIUM, TOTAL	672			P	2	180	19.07	92
7782-49-2	SELENIUM, TOTAL	0.96	J		P	2	1.8	0.73	1.3
7440-22-4	SILVER, TOTAL	0.69	J		P	2	2.8	0.09	0.74
7440-23-5	SODIUM, TOTAL	66.2	J		P	2	180	3.09	92
7440-28-0	THALLIUM, TOTAL	0.10	J		MS	5	0.18	0.01	0.037
7440-62-2	VANADIUM, TOTAL	22.4			P	2	4.6	0.06	0.74
7440-66-6	ZINC, TOTAL	50.6			P	2	4.6	0.12	1.8

Bottle ID: A

Comments:

FORM I - IN

INORGANIC ANALYSIS DATA SHEET

Lab Name: Katahdin Analytical Services **Client Field ID:** B185A3-SB1-0103

Matrix: SOIL **SDG Name:** WE19-6

Percent Solids: 86.9 **Lab Sample ID:** SD4692-017

Concentration Units : mg/Kgdrywt

CAS No.	Analyte	Concentration	C	Q	M	DF	ADJUSTED LOQ	MDL	LOD
7429-90-5	ALUMINUM, TOTAL	11600			P	1	24	1.26	8.2
7440-36-0	ANTIMONY, TOTAL	0.41	U		P	1	0.65	0.09	0.41
7440-38-2	ARSENIC, TOTAL	7.0			MS	5	0.41	0.09	0.33
7440-39-3	BARIUM, TOTAL	30.0			P	1	0.41	0.02	0.24
7440-41-7	BERYLLIUM, TOTAL	0.50			P	1	0.41	0.01	0.041
7440-43-9	CADMIUM, TOTAL	0.041	U		P	1	0.82	0.01	0.041
7440-70-2	CALCIUM, TOTAL	664			P	1	8.2	0.87	6.5
7440-47-3	CHROMIUM, TOTAL	11.6			P	1	1.2	0.03	0.33
7440-48-4	COBALT, TOTAL	6.5			P	1	2.4	0.02	0.33
7440-50-8	COPPER, TOTAL	6.0			P	1	2.0	0.06	0.82
7439-89-6	IRON, TOTAL	16700			P	1	8.2	0.26	6.5
7439-92-1	LEAD, TOTAL	9.5			P	1	0.41	0.08	0.33
7439-95-4	MAGNESIUM, TOTAL	1890			P	1	8.2	0.30	6.5
7439-96-5	MANGANESE, TOTAL	154			P	1	0.41	0.05	0.33
7439-97-6	MERCURY, TOTAL	0.03	J		CV	1	0.033	0.01	0.017
7439-98-7	MOLYBDENUM, TOTAL	0.33	J		P	1	0.82	0.04	0.65
7440-02-0	NICKEL, TOTAL	12.3			P	1	3.3	0.04	0.33
7440-09-7	POTASSIUM, TOTAL	428			P	1	82	8.41	41
7782-49-2	SELENIUM, TOTAL	1.4			P	1	0.82	0.32	0.57
7440-22-4	SILVER, TOTAL	0.34	J		P	1	1.2	0.04	0.33
7440-23-5	SODIUM, TOTAL	42.5	J		P	1	82	1.36	41
7440-28-0	THALLIUM, TOTAL	0.09	J		MS	5	0.16	0.01	0.033
7440-62-2	VANADIUM, TOTAL	18.1			P	1	2.0	0.03	0.33
7440-66-6	ZINC, TOTAL	43.4			P	1	2.0	0.05	0.82

Bottle ID: B

Comments:

INORGANIC ANALYSIS DATA SHEET

Lab Name: Katahdin Analytical Services **Client Field ID:** B185A3-SB1-0305

Matrix: SOIL **SDG Name:** WE19-6

Percent Solids: 86.8 **Lab Sample ID:** SD4692-019

Concentration Units : mg/Kgdrywt

CAS No.	Analyte	Concentration	C	Q	M	DF	ADJUSTED LOQ	MDL	LOD
7429-90-5	ALUMINUM, TOTAL	11700			P	1	21	1.08	7.0
7440-36-0	ANTIMONY, TOTAL	0.35	U		P	1	0.56	0.08	0.35
7440-38-2	ARSENIC, TOTAL	4.6			MS	5	0.35	0.08	0.28
7440-39-3	BARIUM, TOTAL	33.5			P	1	0.35	0.02	0.21
7440-41-7	BERYLLIUM, TOTAL	0.40			P	1	0.35	0.01	0.035
7440-43-9	CADMIUM, TOTAL	0.035	U		P	1	0.70	0.01	0.035
7440-70-2	CALCIUM, TOTAL	1430			P	1	7.0	0.74	5.6
7440-47-3	CHROMIUM, TOTAL	12.4			P	1	1.0	0.02	0.28
7440-48-4	COBALT, TOTAL	7.2			P	1	2.1	0.01	0.28
7440-50-8	COPPER, TOTAL	13.6			P	1	1.7	0.05	0.70
7439-89-6	IRON, TOTAL	15900			P	1	7.0	0.22	5.6
7439-92-1	LEAD, TOTAL	7.6			P	1	0.35	0.07	0.28
7439-95-4	MAGNESIUM, TOTAL	2690			P	1	7.0	0.25	5.6
7439-96-5	MANGANESE, TOTAL	214			P	1	0.35	0.04	0.28
7439-97-6	MERCURY, TOTAL	0.018	U		CV	1	0.035	0.01	0.018
7439-98-7	MOLYBDENUM, TOTAL	0.22	J		P	1	0.70	0.03	0.56
7440-02-0	NICKEL, TOTAL	16.4			P	1	2.8	0.04	0.28
7440-09-7	POTASSIUM, TOTAL	690			P	1	70	7.19	35
7782-49-2	SELENIUM, TOTAL	0.51	J		P	1	0.70	0.27	0.49
7440-22-4	SILVER, TOTAL	0.08	J		P	1	1.0	0.03	0.28
7440-23-5	SODIUM, TOTAL	46.6	J		P	1	70	1.17	35
7440-28-0	THALLIUM, TOTAL	0.07	J		MS	5	0.14	0.01	0.028
7440-62-2	VANADIUM, TOTAL	18.2			P	1	1.7	0.02	0.28
7440-66-6	ZINC, TOTAL	40.5			P	1	1.7	0.04	0.70

Bottle ID: B

Comments:

TETRA TECH NUS, INC **INTERNAL CORRESPONDENCE**

C-NAVY-12-10-4032W

Date: December 9, 2010

c: File G02124-4.10 (w/enc.-original)
D. Seiken (w/o enc.)

To: J. Forrelli (w/o enc.)

From: J. Cardinal (no copy)

Subject: Tier II Inorganic Data Validation, SDG WE19-10
Katahdin Analytical Services
CTO WE19, Site 08 – NUSC Disposal Area, Naval Station Newport, Middletown, RI

Metals:

5/Soils/	B179-SB2-0001	B179-SB2-0204
	B179-SB3-0001	B179-SB3-0406
	B179-SB-DUP03	

(Field duplicate pair: B179-SB2-0204/B179-SB-DUP03)

Tetra Tech NUS, Inc. (TtNUS) performed a Tier II data validation on the metals analytical data for the soil samples collected at Site 08 at the Naval Undersea System Center (NUSC) Disposal Area, Naval Station Newport, Middletown, Rhode Island site on November 22, 2010. Sample analysis was performed according to the Work Plan for Remedial Investigation Revision 2 for Site 08 – NUSC Disposal Area, Naval Station Newport, Middletown, Rhode Island dated January 2007 and Addendum dated June 2010.

The metals analysis was performed according to USEPA SW-846 Methods 6010/6020/7471. The metals data validation was performed in accordance with the Region I EPA-NE Data Validation Functional Guidelines for Evaluating Environmental Analyses, Part IV, November 2008.

The sample results, validation qualifiers (VQL), and qualifier codes (QLCD) are presented in the enclosed data summary tables. A list of the qualifier codes, which provide the reasons for the validation qualifiers, is enclosed.

The data were evaluated based on the following parameters:

	• Data Completeness
*	• Holding Times
*	• ICP-MS Tune
*	• ICP-MS Internal Standard Performance
*	• Calibration Verification
	• Laboratory Blank Analyses
	• ICP Interference Check Sample Results
NA	• Matrix Spike
NA	• Laboratory Duplicate Results
*	• Laboratory Control Sample Results
*	• Field Duplicate Precision
NA	• ICP Serial Dilution Results

*
- Percent Solids
- Reporting Limits

* All criteria were met for this parameter.
NA Not applicable for this SDG.

Data Completeness

On December 3, 2010 the laboratory provided the Form 10 for the aqueous MDLs since it was not provided in the original data package.

Laboratory Blank Analyses

The following table summarizes the maximum levels of laboratory blank contamination and blank action levels applied to the soil samples:

Analyte	Max. Conc.	Action Level	Affected Samples
Mercury	-0.007 mg/kg	0.035 mg/kg	All samples

The positive mercury results below the blank action level are estimated (J) in all samples due to negative instrument drift as evidenced by the negative blank results.

Although negative results for mercury were found in the laboratory blanks, the project accuracy goals are not impacted since the affected results are much lower than the project action limit. The positive mercury results in the affected samples are usable as estimated values which may be biased low.

ICP Interference Check Sample Results

The following results were qualified in the affected samples due to ICP interference attributed to the high concentration of iron in the samples:

Analyte	Action		Bias	Affected Samples
	(+)	ND		
Cadmium		UJ	Low	All samples
Molybdenum	J		Low	
Silver	J	UJ	Low	All samples except B179-SB2-0001

The positive and non-detected results for cadmium, molybdenum, and silver results in the affected samples are qualified as estimated (J, UJ) due to negative ICP interference attributed to iron. These results may be biased low.

Although there were negative ICP interferences attributed to the high concentration of iron that resulted in estimating the results for cadmium, molybdenum, and silver in the samples listed above, the project accuracy goals are not impacted since the affected sample results are much lower than the project action limits. The positive and non-detected cadmium, molybdenum, and silver results in the affected samples are usable as estimated values which may be biased low.

Reporting Limits

Non-detected metal results were reported to the limit of detection (LOD). Positive results below the limit of quantitation (LOQ) and above the method detection limit (MDL) were qualified as estimated (J) due to uncertainty below the LOQ.

All ICP-MS digestates were diluted by a factor of 5 during analysis to reduce mass interference from chlorine which is present in the digestates from the hydrochloric acid used in digestion.

The project quantitation limit (PQL) goals were slightly exceeded due to moisture in the samples. The project action limits (PALs) were met by the adjusted LOQs except for arsenic, beryllium, chromium, and vanadium. All PALs were met by the adjusted LODs except for the chromium PAL which was slightly exceeded only in sample B179-SB-DUP03. Data usability may be impacted for chromium in sample B179-SB-DUP03

Data Usability Assessment

The data usability assessment was performed to determine if the data met the project data quality objectives for acceptable accuracy, precision, sensitivity, and completeness; and to determine and define the impact of the exceeded quality control indicators on the technical usability of the data. Please refer to the specific sections in the above validation report for further details.

The project goals with respect to accuracy were met for the metals data set. Mercury was qualified as estimated in all samples due to negative instrument drift. Cadmium, molybdenum, and silver were qualified as estimated in select samples due to negative ICP interferences. Although specific method criteria were not met in these instances, data usability was not impacted and the affected positive and non-detected results are usable as estimated values.

The project goals with respect to sensitivity were met for the metals data set with the following exceptions. All project action limits (PALs) were met by the adjusted LOQs except for arsenic, beryllium, chromium, and vanadium. All PALs were met by the adjusted LODs except for the chromium PAL which was slightly exceeded only in sample B179-SB-DUP03. Data usability may be impacted for chromium in sample B179-SB-DUP03

The project goals with respect to precision and completeness were met for the metals data set. Data usability is not impacted with regards to precision and completeness.

Tables: Data Summary Tables
Data Validation Qualifiers and Codes

Enclosures: Data Validation Worksheets

Data Validation Qualifiers and Codes

Data Validation Qualifiers:

= No qualifier attached to value (positive hit)
J = Value is estimated
U = Value is not detected
UJ = Value is not detected and estimated
R = Value (positive hit) is not usable
UR = Value was reported as ND but is not usable

Qualifier Codes:

A = Lab Blank Contamination
B = Field Blank Contamination
C = Calibration Noncompliance (e.g. % RSDs, %Ds, ICVs, CCVs, RRFs, etc.)
C01 = GC/MS Tuning Noncompliance
D = MS/MSD Recovery Noncompliance
E = LCS/LCSD Recovery Noncompliance
F = Lab Duplicate Imprecision
G = Field Duplicate Imprecision
H = Holding Time Exceedance
I = ICP Serial Dilution Noncompliance
J = GFAA PDS - GFAA MSA's $r < 0.995$
K = ICP Interference - includes ICS % R Noncompliance
L = Instrument Calibration Range Exceedance
M = Sample Preservation Noncompliance
N = Internal Standard Noncompliance
N01 = Internal Standard Recovery Noncompliance Dioxins
N02 = Recovery Standard Noncompliance Dioxins
N03 = Clean-up Standard Noncompliance Dioxins
O = Poor Instrument Performance (e.g. base-line drifting)
P = Uncertainty below quantitation limit (< QL but ≥ MDL)
Q = Other problems (can encompass a number of issues; e.g. chromatography,interferences, etc.)
R = Surrogates Recovery Noncompliance
S = Pesticide/PCB Resolution
T = % Breakdown Noncompliance for DDT and Endrin
U = % Difference between columns/detectors >25% for positive results determined via GC/HPLC
V = Non-linear calibrations; correlation coefficient $r < 0.995$
W = EMPC result
X = Signal to noise response drop
Y = Percent solids <30%
Z = Uncertainty at 2 sigma deviation is greater than sample activity

PROJ_NO: 02124	NSAMPLE	B179-SB2-0001			B179-SB2-0204			B179-SB3-0001			B179-SB3-0406		
SDG: WE19-10	LAB_ID	SD7324-001			SD7324-003			SD7324-005			SD7324-007		
FRACTION: M	SAMP_DATE	11/22/2010			11/22/2010			11/22/2010			11/22/2010		
MEDIA: SOIL	QC_TYPE	NM			NM			NM			NM		
	UNITS	MG/KG			MG/KG			MG/KG			MG/KG		
	PCT_SOLIDS	80.8			84.9			88.0			86.4		
	DUP_OF												
PARAMETER		RESULT	VQL	QLCD	RESULT	VQL	QLCD	RESULT	VQL	QLCD	RESULT	VQL	QLCD
ALUMINUM		13100			13400			10200			9980		
ANTIMONY		0.45	U		0.44	U		0.49	U		0.39	U	
ARSENIC		4.2			5			3.6			4.7		
BARIUM		25.3			25.4			23.6			20.2		
BERYLLIUM		0.43	J	P	0.45			0.35	J	P	0.34	J	P
CADMIUM		0.27	UJ	K	0.26	UJ	K	0.3	UJ	K	0.23	UJ	K
CALCIUM		766			923			1170			800		
CHROMIUM		13.3			16.2			9.9			7.9		
COBALT		6.1			8.5			6.2			4.2		
COPPER		10.1			12.5			11.1			8.1		
IRON		15100			21400			15700			13700		
LEAD		11.3			11.6			11.8			7.9		
MAGNESIUM		2190			3440			2470			1660		
MANGANESE		142			196			220			159		
MERCURY		0.03	J	O	0.008	J	OP	0.02	J	OP	0.008	J	OP
MOLYBDENUM		0.25	J	KP	0.2	J	KP	0.21	J	KP	0.23	J	KP
NICKEL		11.7			15.9			11.4			8		
POTASSIUM		418			427			756			661		
SELENIUM		0.38	J	P	0.61	U		0.69	U		0.35	J	P
SILVER		5.1			0.35	UJ	K	0.4	UJ	K	0.31	UJ	K
SODIUM		77.3	J	P	62.3	J	P	101			127		
THALLIUM		0.08	J	P	0.06	J	P	0.06	J	P	0.08		
VANADIUM		21.2			21.2			14.2			12.5		
ZINC		32.8			41.8			37.7			27.9		

PROJ_NO: 02124	NSAMPLE	B179-SB-DUP03		
SDG: WE19-10	LAB_ID	SD7324-009		
FRACTION: M	SAMP_DATE	11/22/2010		
MEDIA: SOIL	QC_TYPE	FD		
	UNITS	MG/KG		
	PCT_SOLIDS	75.5		
	DUP_OF	B179-SB2-0204		
PARAMETER		RESULT	VQL	QLCD
ALUMINUM		11300		
ANTIMONY		0.52	U	
ARSENIC		4.4		
BARIUM		23		
BERYLLIUM		0.38	J	P
CADMIUM		0.31	UJ	K
CALCIUM		751		
CHROMIUM		12.5		
COBALT		7.1		
COPPER		10.2		
IRON		16900		
LEAD		15		
MAGNESIUM		2480		
MANGANESE		146		
MERCURY		0.008	J	OP
MOLYBDENUM		0.2	J	KP
NICKEL		12.9		
POTASSIUM		357		
SELENIUM		0.43	J	P
SILVER		0.16	J	KP
SODIUM		66.1	J	P
THALLIUM		0.06	J	P
VANADIUM		16.9		
ZINC		34.7		

TETRA TECH NUS, INC **INTERNAL CORRESPONDENCE**

C-NAVY-12-10-4031W

Date: December 9, 2010

c: File G02124-4.10 (w/enc.-original)
D. Seiken (w/o enc.)

To: J. Forrelli (w/o enc.)

From: J. Cardinal (no copy)

Subject: Tier II Organic Data Validation, SDG WE19-10
Katahdin Analytical Services
CTO WE19, Site 08 – NUSC Disposal Area, Naval Station Newport, Middletown, RI

VOC/SVOC/PAH/Pesticide/PCB:

5/Soils/	B179-SB2-0001	B179-SB2-0204
	B179-SB3-0001	B179-SB3-0406
	B179-SB-DUP03	

(Field duplicate pair: B179-SB2-0204/B179-SB-DUP03)

VOC:

1/Trip blank/	B179-TB-112210

Tetra Tech NUS, Inc. (TtNUS) performed a Tier II data validation on the volatile organic compound (VOC), semivolatile organic compound (SVOC), polycyclic aromatic hydrocarbon (PAH), pesticide, and polychlorinated biphenyl (PCB) analytical data for the soil samples collected at Site 08 at the Naval Undersea System Center (NUSC) Disposal Area, Naval Station Newport, Middletown, Rhode Island site on November 22, 2010. Sample analysis was performed according to the Work Plan for Remedial Investigation Revision 2 for Site 08 – NUSC Disposal Area, Naval Station Newport, Middletown, Rhode Island dated January 2007 and Addendum dated June 2010.

The VOC and SVOC analyses were performed according to USEPA SW-846 Methods 8260B and 8270C, respectively. PAHs were analyzed by Method 8270C in the selective ion monitoring (SIM) mode. (In this report, PAHs are included under SVOC-SIM.) The pesticides and PCB analyses were performed according to USEPA SW-846 Methods 8081 and 8082, respectively.

The VOC, SVOC, and PAH data validation was performed in accordance with the Region I EPA-NE Data Validation Functional Guidelines for Evaluating Environmental Analyses, December 1996. The pesticides and PCB validation was performed in accordance with the Region I, EPA-NE Data Validation Functional Guidelines for Evaluating Organic Analyses, Part III, February 2004.

The sample results, validation qualifiers (VQL), and qualifier codes (QLCD) are presented in the enclosed data summary tables. A list of the qualifier codes, which provide the reasons for the validation qualifiers, is enclosed.

The data were evaluated based on the following parameters:

- Data Completeness
* • Preservation and Technical Holding Times
* • GC/MS Instrument Performance Check (Tuning)

* • Pesticide Degradation
• Initial and Continuing Calibrations
• Blanks
* • Surrogate Compounds
• Internal Standards
NA • Matrix Spike/Matrix Spike Duplicate
• Laboratory Control Sample/Laboratory Control Sample Duplicate
• Field Duplicates
• Analyte Identification/Quantitation
* • Percent Solids
• Reporting Limits

* All criteria were met for this parameter.
NA Not applicable for this SDG.

Data Completeness

Volatiles

The laboratory noted that the volatiles trip blank submitted was solid, not aqueous as listed on the chain-of-custody form.

Initial and Continuing Calibrations

Volatiles

The following table summarizes the volatile compounds that failed to meet the initial calibration verification recovery criteria of 75-125%:

Compound	%R	Action		Affected Samples
		(+)	NDs	
Dichlorodifluoromethane	45.40		UJ	All samples
Chloromethane	70.02		UJ	
Carbon disulfide	72.33	J		

Although initial calibration verification recoveries for dichlorodifluoromethane, chloromethane, and carbon disulfide were below the QC limit, the project accuracy goals are not impacted since either there are no project action limits established for the compounds or the affected results are much lower than the project action limits. The positive and non-detected dichlorodifluoromethane, chloromethane, and carbon disulfide results in the affected samples are usable as estimated values which may be biased low.

Semivolatiles – Full Scan

The following table summarizes the semivolatile compounds that failed to meet the initial calibration (IC) criterion of %RSD <30% or the continuing calibration (CC) criterion of %D < 25:

Compound	%RSD or %D	Action		Affected Samples
		(+)	NDs	
4-Nitrophenol	30.678		UJ	All samples
Benzidine	40.111		UJ	
N-Nitrosodimethylamine	33.65		UJ	

Although the %RSD or %D were outside of the QC limit for 4-nitrophenol, benzidine, and N-nitrosodimethylamine; the project accuracy goals are not impacted since there are no project action limits established for these compounds for the soil samples. The non-detected 4-nitrophenol, benzidine, and N-nitrosodimethylamine results for the affected samples are usable as estimated values.

The following table summarizes the semivolatile compound that failed to meet the initial calibration verification recovery criteria of 75-125%:

Compound	%R	Action		Affected Samples
		(+)	NDs	
Benzidine	43.46		UJ	All samples

Although initial calibration verification recovery for benzidine was below the QC limit, the project accuracy goals are not impacted since there are no project action limits established for benzidine for the soil samples. The non-detected benzidine results in the affected samples are usable as estimated values which may be biased low.

Semivolatiles - SIM

The following table summarizes the semivolatile-SIM compounds that failed to meet the initial calibration verification recovery criteria of 75-125%:

Compound	%R	Action		Affected Samples
		(+)	NDs	
Acenaphthylene	66.10	J	UJ	All samples
Fluorene	67.20	J	UJ	

Although initial calibration verification recoveries for acenaphthylene and fluorene were below the QC limit, the project accuracy goals are not impacted since the affected results are much lower than the project action limits. The positive and non-detected acenaphthylene and fluorene results in the affected samples are usable as estimated values which may be biased low.

Blanks

Volatiles

The following table summarizes the level of blank contamination detected in the laboratory blank associated with the samples.

Compound	Type of Blank	Maximum Conc. (µg/Kg)	Action Level (µg/Kg)	Affected Samples
Acetone	Method	5.6	56	B179-SB2-0001, B179-SB3-0001, B179-SB3-0406, B179-SB-DUP03
Carbon disulfide	Method	2.2	11	All samples

Blank actions were applied to the affected samples due to acetone and carbon disulfide method blank contamination. The 10x rule applies for acetone while the 5x rule applies for carbon disulfide. The positive results below the blank action level and below the limit of detection (LOD) in the affected samples were changed to non-detected values at the LOD. The positive results below the blank action level and above the LOD were changed to non-detected values.

Although acetone and carbon disulfide contamination was found in the laboratory method blank, the project sensitivity goals are not impacted since the non-detected values do not exceed the project action limits. The results in the affected samples are usable as non-detected values.

Semivolatiles – Full Scan

The following table summarizes the level of blank contamination detected in the laboratory blank associated with the samples.

Compound	Type of Blank	Maximum Conc. (µg/Kg)	Action Level (µg/Kg)	Affected Samples
Bis(2-ethylhexyl)phthalate	Method	540	5400	B179-SB2-0204, B179-SB-DUP03

Blank actions were applied to the affected samples due to bis(2-ethylhexyl)phthalate method blank contamination. The 10x rule applies for this compound. The positive results below the blank action level were changed to non-detected values.

Bis(2-ethylhexyl)phthalate contamination was found in the laboratory method blank; therefore, the project sensitivity goals may be impacted. The results in the affected samples are usable as non-detected values.

Internal Standards

Volatiles

The following table summarizes the volatile internal standard that failed to meet the acceptance criteria:

Internal Standard	IS Area	Acceptable Range	Action		Affected Samples
			(+)	NDs	
1,4-Dichlorobenzene-d4	265860	323982-1295926		UJ	B179-SB2-0204
	295918			UJ	B179-SB3-0001

The internal standard areas of 1,4-dichlorobenzene-d4 failed to meet the acceptable range for the samples listed above. All non-detected results for the associated compounds are estimated (UJ) in the affected samples due to poor internal standard performance.

The target compounds associated with 1,4-dichlorobenzene-d4 are 1,1,2,2-tetrachloroethane, 1,2,3-trichloropropane, isopropylbenzene, bromobenzene, 2-chlorotoluene, 4-chlorotoluene, 1,3,5-trimethylbenzene, tert-butylbenzene, 1,2,4-trimethylbenzene, sec-butylbenzene, 1,3-dichlorobenzene, 4-isopropyltoluene, 1,4-dichlorobenzene, 1,2-dichlorobenzene, n-propylbenzene, 1,2-dibromo-3-chloropropane, 1,2,4-trichlorobenzene, hexachlorobutadiene, 1,2,3-trichlorobenzene, and n-butylbenzene.

Although the QC criteria were not met for the internal standard areas of 1,4-dichlorobenzene-d4 for the above samples, the project accuracy goals are not impacted since the affected sample results are below the project action limits, or there are no project action limits established for the affected compounds. The non-detected results in the affected samples are usable as estimated values.

Laboratory Control Sample/Laboratory Control Sample Duplicates

Semivolatiles – Full Scan

The following table summarizes the compounds that failed to meet the laboratory control sample/laboratory control sample duplicate (LCS/LCSD) recovery QC limits:

Compound	RPD	RPD QC Limits	LCS/LCSD % Rec.	% Rec. QC Limits	Action		Affected Samples
					(+)	NDs	
Benzoic acid	200	20	0 / 23.6	40-100		UR	All samples
4-Chloroaniline	35	20	-	-		UJ	

-Criterion met

Although the LCS/LCSD RPD criterion was not met for 4-chloroaniline, the project precision goals are not impacted since there are no project action limits established for this compound for the soil samples. The non-detected 4-chloroanilne results in the affected samples are usable as estimated for which the bias is indeterminate.

The LCS did not recover benzoic acid. The non-detected benzoic acid results are rejected (UR) in all samples due to no LCS recovery. These results should not be used for project decisions and the data completeness goals may be impacted.

Semivolatiles - SIM

The following table summarizes the compounds that failed to meet the statistically derived laboratory control sample/laboratory control sample duplicate (LCS/LCSD) recovery QC limits:

Compound	LCS/LCSD % Rec.	QC Limits	Action		Affected Samples
			(+)	NDs	
Acenaphthylene	47.4/43.8	51-103	J	UJ	All samples
Acenaphthene	54.4/50.4	56-97	J		
Fluorene	52.2/47.8	61-103	J	UJ	

Although the LCS/LCSD recovery criteria were not met for acenaphthylene, acenaphthene, and fluorene; the project accuracy goals are not impacted since the affected sample results are much lower than the project action limits. The positive and non-detected acenaphthylene, acenaphthene, and fluorene results in the affected samples are usable as estimated values which may be biased low.

Field Duplicates

Volatiles

The field duplicate pair B179-SB2-0204/B179-SB-DUP03 results did not meet the QC criteria for the following compounds:

Analyte	Sample Result (µg/kg)	Duplicate Result (µg/kg)	RPD	Action	
				(+)	NDs
Acetone	260	19 J	173	J	
2-Butanone	54	14 U	NC	J	UJ

J – Estimated value
U – Value is not detected.
NC – Not calculated.

The 2-butanone result in sample B179-SB2-0204 is greater than 2x the limit of quantitation (LOQ) while the duplicate result is not detected. The positive and non-detected 2-butanone results in samples B179-SB2-0204 and B179-SB-DUP03 are qualified as estimated (J, UJ)

Although the field duplicate relative percent difference (RPD) for acetone and 2-butanone did not meet the QC criteria; the project precision goals are not impacted since the affected sample results are much lower than the project action limits. The positive and non-detected acetone and 2-butanone results in samples B179-SB2-0204 and B179-SB-DUP03 are usable as estimated values for which the bias is indeterminate.

Analyte Identification/Quantitation

Pesticides

The %RPD between the results of analytical columns 1 and 2 exceeded the 40% RPD QC criterion for the compounds in the following samples:

Sample	Analyte	%RPD	Action
			(+)
B179-SB2-0001	4,4'-DDT	58.8	J
B179-SB3-0001	4,4'-DDT	42.0	J

Although the analyte quantitation relative percent differences (RPD) exceeded the 40% QC limit for 4,4'-DDT in the samples listed above; the project accuracy goals are not impacted since the affected sample results are much lower than the project action limit. The positive 4,4'-DDT results in the affected samples are usable as estimated values.

Reporting Limits

Non-detected results were reported to the limit of detection (LOD). Positive results below the limit of quantitation (LOQ) and above the method detection limit (MDL) were qualified as estimated (J) due to uncertainty below the LOQ.

For select samples, the project quantitation limit (PQL) goals were not met by the adjusted LOQs due to percent moisture of the samples.

Volatiles

The project action limits (PALs) were met by the adjusted LOQs except for vinyl chloride. However, all PALs were met by the adjusted LODs.

As discussed in the Blanks section above, blank actions were taken on select samples due to acetone and carbon disulfide method blank contamination. Data usability is not impacted since the non-detected values do not exceed the project action limits.

Semivolatiles – Full Scan

The PALs were met by the adjusted LOQs and LODs except for bis(2-ethylhexyl)phthalate and diethylphthalate as highlighted in the analytical specification. Data usability may be impacted for these compounds.

As discussed in the Blanks section above, blank actions were taken on select samples due to bis(2-ethylhexyl)phthalate method blank contamination. Data usability may be impacted for the affected results.

Semivolatiles – SIM

All PALs were met by the adjusted LOQs and LODs.

Pesticides

The PALs were met by the adjusted LOQs and LODs except alpha-chlordane, dieldrin, and gamma-chlordane as highlighted in the analytical specification. Data usability may be impacted for these compounds.

PCBs

The PALS were met by the adjusted LOQs and LODs.

Volatiles / Semivolatiles – Full Scan

1,2,4-Trichlorobenzene, 1,2-dichlorobenzene, 1,3-dichlorobenzene, 1,4-dichlorobenzene, and hexachlorobutadiene were reported by both Methods 8260B and 8270C. Results from Method 8260B were selected for reporting since this method provides a lower LOD.

Semivolatiles – Full Scan / Pesticides

Hexachlorobenzene was reported by both Methods 8270C and 8081. Results from 8270C were selected for reporting since this GC/MS method is more specific than the GC/ECD method.

Data Usability Assessment

The data usability assessment was performed to determine if the data met the project data quality objectives for acceptable accuracy, precision, sensitivity, and completeness; and to determine and define the impact of the exceeded quality control indicators on the technical usability of the data. Please refer to the specific sections in the above validation report for further details.

Volatiles

The project goals with respect to accuracy were met for the volatiles data set. Dichlorodifluoromethane, chloromethane, and carbon disulfide were qualified as estimated in all samples due to low initial calibration verification recoveries; results may be biased low. Several compounds were qualified as estimated in select samples due to poor internal standard performance. Although specific method criteria were not met in these instances, data usability was not impacted and the affected positive and non-detected results are usable as estimated values.

The project goals with respect to precision were met for the volatiles data set. Acetone and 2-butanone were qualified as estimated in samples B179-SB2-0204 and B179-SB-DUP03 due to poor field duplicate precision. Although specific method criteria were not met in this instance, data usability was not impacted and the affected positive and non-detected results are usable as estimated values.

The project goals with respect to sensitivity were met for the volatiles data set with the following exceptions. All project action limits (PALs) were met by the adjusted LOQs except for vinyl chloride. However, all PALs were met by the adjusted LODs.

The project goals with respect to completeness were met for the volatiles data set. Data usability is not impacted with regards to completeness.

Semivolatiles – Full Scan

The project goals with respect to accuracy were met for the semivolatiles – full scan data set. 4-Nitrophenol, benzidine, and N-nitrosodimethylamine were qualified as estimated in all samples due to instrument calibration variability. Benzidine was qualified as estimated in all samples due to a low initial calibration verification recovery; results may be biased low. Although specific method criteria were not met in these instances, data usability was not impacted and the affected positive and non-detected results are usable as estimated values.

The project goals with respect to precision were met for the semivolatiles – full scan data set. 4-Chloroaniline was qualified as estimated in all samples due to poor LCS/LCSD precision. Although specific method criteria were not met in this instance, data usability was not impacted and the affected non-detected results are usable as estimated values.

The project goals with respect to sensitivity were met for the semivolatiles – full scan data set with the following exceptions. All PALs were met by the adjusted LOQs and LODs except for bis(2-ethylhexyl)phthalate and diethylphthalate as highlighted in the analytical specification. Data usability may be impacted for these compounds. In addition, blank actions were taken on select samples due to bis(2-ethylhexyl)phthalate method blank contamination. Data usability may be impacted for the affected results.

The project goals with respect to completeness were met for the semivolatiles – full scan data set with the following exception. The non-detected benzoic acid results are rejected in all samples due to no LCS recovery. These results should not be used for project decisions.

Semivolatiles – SIM

The project goals with respect to accuracy were met for the semivolatiles – SIM data set. Acenaphthylene and fluorene were qualified as estimated in all samples due to low initial calibration verification recoveries. Acenaphthylene, acenaphthene, and fluorene were qualified as estimated in select samples due to low LCS/LCSD recoveries. Although specific method criteria were not met in these instances, data usability was not impacted and the affected positive and non-detected results are usable as estimated values.

The project goals with respect to precision, sensitivity, and completeness were met for the semivolatiles – SIM data set. Data usability is not impacted with regards to precision, sensitivity, and completeness.

Pesticides

The project goals with respect to accuracy were met for the pesticides data set. 4,4'-DDT was qualified as estimated in select samples due to analytical interferences detected in the dual column analysis. Although specific method criteria were not met in this instance, data usability is not impacted and the affected positive results are usable as estimated values.

The project goals with respect to sensitivity were met for the pesticides data set with the following exception. The PALs were met by the adjusted LOQs and LODs except alpha-chlordane, dieldrin, and gamma-chlordane as highlighted in the analytical specification. Data usability may be impacted for these compounds.

The project goals with respect to precision and completeness were met for the pesticides data set. Data usability is not impacted with regards to precision and completeness.

PCBs

The project goals with respect to accuracy, precision, sensitivity, and completeness were met for the PCB data set. Data usability is not impacted with regards to accuracy, precision, sensitivity, and completeness.

Tables: Data Summary Tables
Data Validation Qualifiers and Codes

Enclosures: Data Validation Worksheets

Data Validation Qualifiers and Codes

Data Validation Qualifiers:

= No qualifier attached to value (positive hit)
J = Value is estimated
U = Value is not detected
UJ = Value is not detected and estimated
R = Value (positive hit) is not usable
UR = Value was reported as ND but is not usable

Qualifier Codes:

A = Lab Blank Contamination
B = Field Blank Contamination
C = Calibration Noncompliance (e.g. % RSDs, %Ds, ICVs, CCVs, RRFs, etc.)
C01 = GC/MS Tuning Noncompliance
D = MS/MSD Recovery Noncompliance
E = LCS/LCSD Recovery Noncompliance
F = Lab Duplicate Imprecision
G = Field Duplicate Imprecision
H = Holding Time Exceedance
I = ICP Serial Dilution Noncompliance
J = GFAA PDS - GFAA MSA's $r < 0.995$
K = ICP Interference - includes ICS % R Noncompliance
L = Instrument Calibration Range Exceedance
M = Sample Preservation Noncompliance
N = Internal Standard Noncompliance
N01 = Internal Standard Recovery Noncompliance Dioxins
N02 = Recovery Standard Noncompliance Dioxins
N03 = Clean-up Standard Noncompliance Dioxins
O = Poor Instrument Performance (e.g. base-line drifting)
P = Uncertainty below quantitation limit (< QL but ≥ MDL)
Q = Other problems (can encompass a number of issues; e.g. chromatography,interferences, etc.)
R = Surrogates Recovery Noncompliance
S = Pesticide/PCB Resolution
T = % Breakdown Noncompliance for DDT and Endrin
U = % Difference between columns/detectors >25% for positive results determined via GC/HPLC
V = Non-linear calibrations; correlation coefficient $r < 0.995$
W = EMPC result
X = Signal to noise response drop
Y = Percent solids <30%
Z = Uncertainty at 2 sigma deviation is greater than sample activity

PROJ_NO: 02124	NSAMPLE	B179-SB2-0001			B179-SB2-0204			B179-SB3-0001			B179-SB3-0406		
SDG: WE19-10	LAB_ID	SD7324-2			SD7324-4			SD7324-6			SD7324-8		
FRACTION: OV	SAMP_DATE	11/22/2010			11/22/2010			11/22/2010			11/22/2010		
MEDIA: SOIL	QC_TYPE	NM			NM			NM			NM		
	UNITS	UG/KG			UG/KG			UG/KG			UG/KG		
	PCT_SOLIDS	80.8			84.9			88.0			86.4		
	DUP_OF												
PARAMETER		RESULT	VQL	QLCD	RESULT	VQL	QLCD	RESULT	VQL	QLCD	RESULT	VQL	QLCD
1,1,1,2-TETRACHLOROETHANE		2.4	U		2.5	U		2.5	U		2.2	U	
1,1,1-TRICHLOROETHANE		2.4	U		2.1	J	P	2.5	U		0.49	J	P
1,1,2,2-TETRACHLOROETHANE		2.4	U		2.5	UJ	N	2.5	UJ	N	2.2	U	
1,1,2-TRICHLOROETHANE		2.4	U		2.5	U		2.5	U		2.2	U	
1,1-DICHLOROETHANE		2.4	U		2.5	U		2.5	U		2.2	U	
1,1-DICHLOROETHENE		2.4	U		2.5	U		2.5	U		2.2	U	
1,1-DICHLOROPROPENE		2.4	U		2.5	U		2.5	U		2.2	U	
1,2,3-TRICHLOROBENZENE		2.4	U		2.5	UJ	N	2.5	UJ	N	2.2	U	
1,2,3-TRICHLOROPROPANE		2.4	U		2.5	UJ	N	2.5	UJ	N	2.2	U	
1,2,4-TRICHLOROBENZENE		2.4	U		2.5	UJ	N	2.5	UJ	N	2.2	U	
1,2,4-TRIMETHYLBENZENE		2.4	U		2.5	UJ	N	2.5	UJ	N	2.2	U	
1,2-DIBROMO-3-CHLOROPROPANE		2.4	U		2.5	UJ	N	2.5	UJ	N	2.2	U	
1,2-DIBROMOETHANE		2.4	U		2.5	U		2.5	U		2.2	U	
1,2-DICHLOROBENZENE		2.4	U		2.5	UJ	N	2.5	UJ	N	2.2	U	
1,2-DICHLOROETHANE		2.4	U		2.5	U		2.5	U		2.2	U	
1,2-DICHLOROPROPANE		2.4	U		2.5	U		2.5	U		2.2	U	
1,3,5-TRIMETHYLBENZENE		2.4	U		2.5	UJ	N	2.5	UJ	N	2.2	U	
1,3-DICHLOROBENZENE		2.4	U		2.5	UJ	N	2.5	UJ	N	2.2	U	
1,3-DICHLOROPROPANE		2.4	U		2.5	U		2.5	U		2.2	U	
1,4-DICHLOROBENZENE		2.4	U		2.5	UJ	N	2.5	UJ	N	2.2	U	
2,2-DICHLOROPROPANE		2.4	U		2.5	U		2.5	U		2.2	U	
2-BUTANONE		12	U		54	J	G	12	U		11	U	
2-CHLOROTOLUENE		2.4	U		2.5	UJ	N	2.5	UJ	N	2.2	U	
2-HEXANONE		12	U		12	U		12	U		11	U	
4-CHLOROTOLUENE		2.4	U		2.5	UJ	N	2.5	UJ	N	2.2	U	
4-ISOPROPYLTOLUENE		2.4	U		2.5	UJ	N	2.5	UJ	N	2.2	U	
4-METHYL-2-PENTANONE		12	U		12	U		12	U		11	U	
ACETONE		38	U	A	260	J	G	52	U	A	18	UJ	AP
BENZENE		2.4	U		2.5	U		2.5	U		2.2	U	
BROMOBENZENE		2.4	U		2.5	UJ	N	2.5	UJ	N	2.2	U	
BROMOCHLOROMETHANE		2.4	U		2.5	U		2.5	U		2.2	U	
BROMODICHLOROMETHANE		2.4	U		2.5	U		2.5	U		2.2	U	
BROMOFORM		2.4	U		2.5	U		2.5	U		2.2	U	
BROMOMETHANE		4.8	U		5	U		5	U		4.4	U	
CARBON DISULFIDE		2.4	UJ	ACP	2.5	UJ	ACP	2.5	UJ	ACP	2.2	UJ	ACP

PROJ_NO: 02124	NSAMPLE	B179-SB-DUP03			B179-TB-112210		
SDG: WE19-10	LAB_ID	SD7324-10			SD7324-11		
FRACTION: OV	SAMP_DATE	11/22/2010			11/22/2010		
MEDIA: SOIL	QC_TYPE	FD			TB		
	UNITS	UG/KG			UG/KG		
	PCT_SOLIDS	75.5					
	DUP_OF	B179-SB2-0204					
PARAMETER		RESULT	VQL	QLCD	RESULT	VQL	QLCD
1,1,1,2-TETRACHLOROETHANE		2.8	U		2.5	U	
1,1,1-TRICHLOROETHANE		0.64	J	P	2.5	U	
1,1,2,2-TETRACHLOROETHANE		2.8	U		2.5	U	
1,1,2-TRICHLOROETHANE		2.8	U		2.5	U	
1,1-DICHLOROETHANE		2.8	U		2.5	U	
1,1-DICHLOROETHENE		2.8	U		2.5	U	
1,1-DICHLOROPROPENE		2.8	U		2.5	U	
1,2,3-TRICHLOROBENZENE		2.8	U		2.5	U	
1,2,3-TRICHLOROPROPANE		2.8	U		2.5	U	
1,2,4-TRICHLOROBENZENE		2.8	U		2.5	U	
1,2,4-TRIMETHYLBENZENE		2.8	U		2.5	U	
1,2-DIBROMO-3-CHLOROPROPANE		2.8	U		2.5	U	
1,2-DIBROMOETHANE		2.8	U		2.5	U	
1,2-DICHLOROBENZENE		2.8	U		2.5	U	
1,2-DICHLOROETHANE		2.8	U		2.5	U	
1,2-DICHLOROPROPANE		2.8	U		2.5	U	
1,3,5-TRIMETHYLBENZENE		2.8	U		2.5	U	
1,3-DICHLOROBENZENE		2.8	U		2.5	U	
1,3-DICHLOROPROPANE		2.8	U		2.5	U	
1,4-DICHLOROBENZENE		2.8	U		2.5	U	
2,2-DICHLOROPROPANE		2.8	U		2.5	U	
2-BUTANONE		14	UJ	G	12	U	
2-CHLOROTOLUENE		2.8	U		2.5	U	
2-HEXANONE		14	U		12	U	
4-CHLOROTOLUENE		2.8	U		2.5	U	
4-ISOPROPYLTOLUENE		2.8	U		2.5	U	
4-METHYL-2-PENTANONE		14	U		12	U	
ACETONE		19	UJ	AGP	12	U	
BENZENE		2.8	U		2.5	U	
BROMOBENZENE		2.8	U		2.5	U	
BROMOCHLOROMETHANE		2.8	U		2.5	U	
BROMODICHLOROMETHANE		2.8	U		2.5	U	
BROMOFORM		2.8	U		2.5	U	
BROMOMETHANE		5.5	U		5	U	
CARBON DISULFIDE		2.8	UJ	ACP	2.5	UJ	ACP

PROJ_NO: 02124	NSAMPLE	B179-SB2-0001			B179-SB2-0204			B179-SB3-0001			B179-SB3-0406		
SDG: WE19-10	LAB_ID	SD7324-2			SD7324-4			SD7324-6			SD7324-8		
FRACTION: OV	SAMP_DATE	11/22/2010			11/22/2010			11/22/2010			11/22/2010		
MEDIA: SOIL	QC_TYPE	NM			NM			NM			NM		
	UNITS	UG/KG			UG/KG			UG/KG			UG/KG		
	PCT_SOLIDS	80.8			84.9			88.0			86.4		
	DUP_OF												
PARAMETER		RESULT	VQL	QLCD	RESULT	VQL	QLCD	RESULT	VQL	QLCD	RESULT	VQL	QLCD
CARBON TETRACHLORIDE		2.4	U		2.5	U		2.5	U		2.2	U	
CHLOROBENZENE		2.4	U		2.5	U		2.5	U		2.2	U	
CHLORODIBROMOMETHANE		2.4	U		2.5	U		2.5	U		2.2	U	
CHLOROETHANE		4.8	U		5	U		5	U		4.4	U	
CHLOROFORM		2.4	U		2.5	U		2.5	U		2.2	U	
CHLOROMETHANE		4.8	UJ	C	5	UJ	C	5	UJ	C	4.4	UJ	C
CIS-1,2-DICHLOROETHENE		2.4	U		2.5	U		2.5	U		2.2	U	
CIS-1,3-DICHLOROPROPENE		2.4	U		2.5	U		2.5	U		2.2	U	
DIBROMOMETHANE		2.4	U		2.5	U		2.5	U		2.2	U	
DICHLORODIFLUOROMETHANE		4.8	UJ	C	5	UJ	C	5	UJ	C	4.4	UJ	C
ETHYLBENZENE		2.4	U		2.5	U		2.5	U		2.2	U	
HEXACHLOROBUTADIENE		2.4	U		2.5	UJ	N	2.5	UJ	N	2.2	U	
ISOPROPYLBENZENE		2.4	U		2.5	UJ	N	2.5	UJ	N	2.2	U	
M+P-XYLENES		4.8	U		5	U		5	U		4.4	U	
METHYL TERT-BUTYL ETHER		2.4	U		2.5	U		2.5	U		2.2	U	
METHYLENE CHLORIDE		12	U		12	U		12	U		11	U	
N-BUTYLBENZENE		2.4	U		2.5	UJ	N	2.5	UJ	N	2.2	U	
N-PROPYLBENZENE		2.4	U		2.5	UJ	N	2.5	UJ	N	2.2	U	
O-XYLENE		2.4	U		2.5	U		2.5	U		2.2	U	
SEC-BUTYLBENZENE		2.4	U		2.5	UJ	N	2.5	UJ	N	2.2	U	
STYRENE		2.4	U		2.5	U		2.5	U		2.2	U	
TERT-BUTYLBENZENE		2.4	U		2.5	UJ	N	2.5	UJ	N	2.2	U	
TETRACHLOROETHENE		2.4	U		2.5	U		2.5	U		2.2	U	
TOLUENE		2.4	U		2.5	U		2.5	U		2.2	U	
TRANS-1,2-DICHLOROETHENE		2.4	U		2.5	U		2.5	U		2.2	U	
TRANS-1,3-DICHLOROPROPENE		2.4	U		2.5	U		2.5	U		2.2	U	
TRICHLOROETHENE		2.4	U		2.5	U		2.5	U		2.2	U	
TRICHLOROFLUOROMETHANE		4.8	U		5	U		5	U		4.4	U	
VINYL CHLORIDE		4.8	U		5	U		5	U		4.4	U	

PROJ_NO: 02124	NSAMPLE	B179-SB-DUP03			B179-TB-112210		
SDG: WE19-10	LAB_ID	SD7324-10			SD7324-11		
FRACTION: OV	SAMP_DATE	11/22/2010			11/22/2010		
MEDIA: SOIL	QC_TYPE	FD			TB		
	UNITS	UG/KG			UG/KG		
	PCT_SOLIDS	75.5					
	DUP_OF	B179-SB2-0204					
PARAMETER		RESULT	VQL	QLCD	RESULT	VQL	QLCD
CARBON TETRACHLORIDE		2.8	U		2.5	U	
CHLOROBENZENE		2.8	U		2.5	U	
CHLORODIBROMOMETHANE		2.8	U		2.5	U	
CHLOROETHANE		5.5	U		5	U	
CHLOROFORM		2.8	U		2.5	U	
CHLOROMETHANE		5.5	UJ	C	5	UJ	C
CIS-1,2-DICHLOROETHENE		2.8	U		2.5	U	
CIS-1,3-DICHLOROPROPENE		2.8	U		2.5	U	
DIBROMOMETHANE		2.8	U		2.5	U	
DICHLORODIFLUOROMETHANE		5.5	UJ	C	5	UJ	C
ETHYLBENZENE		2.8	U		2.5	U	
HEXACHLOROBUTADIENE		2.8	U		2.5	U	
ISOPROPYLBENZENE		2.8	U		2.5	U	
M+P-XYLENES		5.5	U		5	U	
METHYL TERT-BUTYL ETHER		2.8	U		2.5	U	
METHYLENE CHLORIDE		14	U		12	U	
N-BUTYLBENZENE		2.8	U		2.5	U	
N-PROPYLBENZENE		2.8	U		2.5	U	
O-XYLENE		2.8	U		2.5	U	
SEC-BUTYLBENZENE		2.8	U		2.5	U	
STYRENE		2.8	U		2.5	U	
TERT-BUTYLBENZENE		2.8	U		2.5	U	
TETRACHLOROETHENE		2.8	U		2.5	U	
TOLUENE		2.8	U		2.5	U	
TRANS-1,2-DICHLOROETHENE		2.8	U		2.5	U	
TRANS-1,3-DICHLOROPROPENE		2.8	U		2.5	U	
TRICHLOROETHENE		2.8	U		2.5	U	
TRICHLOROFLUOROMETHANE		5.5	U		5	U	
VINYL CHLORIDE		5.5	U		5	U	

PROJ_NO: 02124	NSAMPLE	B179-SB2-0001			B179-SB2-0204			B179-SB3-0001			B179-SB3-0406		
SDG: WE19-10	LAB_ID	SD7324-1			SD7324-3			SD7324-5			SD7324-7		
FRACTION: OS	SAMP_DATE	11/22/2010			11/22/2010			11/22/2010			11/22/2010		
MEDIA: SOIL	QC_TYPE	NM			NM			NM			NM		
	UNITS	UG/KG			UG/KG			UG/KG			UG/KG		
	PCT_SOLIDS	80.8			84.9			88.0			86.4		
	DUP_OF												
PARAMETER		RESULT	VQL	QLCD	RESULT	VQL	QLCD	RESULT	VQL	QLCD	RESULT	VQL	QLCD
1,1-BIPHENYL		290	U		270	U		280	U		280	U	
1,2-DIPHENYLHYDRAZINE		580	U		540	U		560	U		560	U	
2,2'-OXYBIS(1-CHLOROPROPANE)		290	U		270	U		280	U		280	U	
2,4,5-TRICHLOROPHENOL		720	U		680	U		700	U		700	U	
2,4,6-TRICHLOROPHENOL		290	U		270	U		280	U		280	U	
2,4-DICHLOROPHENOL		290	U		270	U		280	U		280	U	
2,4-DIMETHYLPHENOL		290	U		270	U		280	U		280	U	
2,4-DINITROPHENOL		720	U		680	U		700	U		700	U	
2,4-DINITROTOLUENE		290	U		270	U		280	U		280	U	
2,6-DICHLOROPHENOL		290	U		270	U		280	U		280	U	
2,6-DINITROTOLUENE		290	U		270	U		280	U		280	U	
2-CHLORONAPHTHALENE		290	U		270	U		280	U		280	U	
2-CHLOROPHENOL		290	U		270	U		280	U		280	U	
2-METHYLPHENOL		290	U		270	U		280	U		280	U	
2-NITROANILINE		720	U		680	U		700	U		700	U	
2-NITROPHENOL		290	U		270	U		280	U		280	U	
3&4-METHYLPHENOL		290	U		270	U		280	U		280	U	
3,3'-DICHLOROBENZIDINE		290	U		270	U		280	U		280	U	
3-NITROANILINE		720	U		680	U		700	U		700	U	
4,6-DINITRO-2-METHYLPHENOL		720	U		680	U		700	U		700	U	
4-BROMOPHENYL PHENYL ETHER		290	U		270	U		280	U		280	U	
4-CHLORO-3-METHYLPHENOL		290	U		270	U		280	U		280	U	
4-CHLOROANILINE		290	UJ	E	270	UJ	E	280	UJ	E	280	UJ	E
4-CHLOROPHENYL PHENYL ETHER		290	U		270	U		280	U		280	U	
4-NITROANILINE		720	U		680	U		700	U		700	U	
4-NITROPHENOL		720	UJ	C	680	UJ	C	700	UJ	C	700	UJ	C
BENZIDINE		1300	UJ	C	1200	UJ	C	1300	UJ	C	1300	UJ	C
BENZOIC ACID		720	UR	E	680	UR	E	700	UR	E	700	UR	E
BENZYL ALCOHOL		580	U		540	U		560	U		560	U	
BIS(2-CHLOROETHOXY)METHANE		290	U		270	U		280	U		280	U	
BIS(2-CHLOROETHYL)ETHER		290	U		270	U		280	U		280	U	
BIS(2-ETHYLHEXYL)PHTHALATE		290	U		520	U	A	280	U		280	U	
BUTYL BENZYL PHTHALATE		290	U		270	U		280	U		280	U	
CARBAZOLE		290	U		270	U		280	U		280	U	
DIBENZOFURAN		290	U		270	U		280	U		280	U	

PROJ_NO: 02124	NSAMPLE	B179-SB-DUP03
SDG: WE19-10	LAB_ID	SD7324-9
FRACTION: OS	SAMP_DATE	11/22/2010
MEDIA: SOIL	QC_TYPE	FD
	UNITS	UG/KG
	PCT_SOLIDS	75.5
	DUP_OF	B179-SB2-0204

PARAMETER	RESULT	VQL	QLCD
1,1-BIPHENYL	310	U	
1,2-DIPHENYLHYDRAZINE	620	U	
2,2'-OXYBIS(1-CHLOROPROPANE)	310	U	
2,4,5-TRICHLOROPHENOL	770	U	
2,4,6-TRICHLOROPHENOL	310	U	
2,4-DICHLOROPHENOL	310	U	
2,4-DIMETHYLPHENOL	310	U	
2,4-DINITROPHENOL	770	U	
2,4-DINITROTOLUENE	310	U	
2,6-DICHLOROPHENOL	310	U	
2,6-DINITROTOLUENE	310	U	
2-CHLORONAPHTHALENE	310	U	
2-CHLOROPHENOL	310	U	
2-METHYLPHENOL	310	U	
2-NITROANILINE	770	U	
2-NITROPHENOL	310	U	
3&4-METHYLPHENOL	310	U	
3,3'-DICHLOROBENZIDINE	310	U	
3-NITROANILINE	770	U	
4,6-DINITRO-2-METHYLPHENOL	770	U	
4-BROMOPHENYL PHENYL ETHER	310	U	
4-CHLORO-3-METHYLPHENOL	310	U	
4-CHLOROANILINE	310	UJ	E
4-CHLOROPHENYL PHENYL ETHER	310	U	
4-NITROANILINE	770	U	
4-NITROPHENOL	770	UJ	C
BENZIDINE	1400	UJ	C
BENZOIC ACID	770	UR	E
BENZYL ALCOHOL	620	U	
BIS(2-CHLOROETHOXY)METHANE	310	U	
BIS(2-CHLOROETHYL)ETHER	310	U	
BIS(2-ETHYLHEXYL)PHTHALATE	480	U	A
BUTYL BENZYL PHTHALATE	310	U	
CARBAZOLE	310	U	
DIBENZOFURAN	310	U	

PROJ_NO: 02124	NSAMPLE	B179-SB2-0001			B179-SB2-0204			B179-SB3-0001			B179-SB3-0406		
SDG: WE19-10	LAB_ID	SD7324-1			SD7324-3			SD7324-5			SD7324-7		
FRACTION: OS	SAMP_DATE	11/22/2010			11/22/2010			11/22/2010			11/22/2010		
MEDIA: SOIL	QC_TYPE	NM			NM			NM			NM		
	UNITS	UG/KG			UG/KG			UG/KG			UG/KG		
	PCT_SOLIDS	80.8			84.9			88.0			86.4		
	DUP_OF												
PARAMETER		RESULT	VQL	QLCD	RESULT	VQL	QLCD	RESULT	VQL	QLCD	RESULT	VQL	QLCD
DIETHYL PHTHALATE		290	U		270	U		280	U		280	U	
DIMETHYL PHTHALATE		290	U		270	U		280	U		280	U	
DI-N-BUTYL PHTHALATE		290	U		270	U		280	U		280	U	
DI-N-OCTYL PHTHALATE		290	U		270	U		280	U		280	U	
HEXACHLOROBENZENE		290	U		270	U		280	U		280	U	
HEXACHLOROETHANE		290	U		270	U		280	U		280	U	
ISOPHORONE		290	U		270	U		280	U		280	U	
NITROBENZENE		290	U		270	U		280	U		280	U	
N-NITROSODIMETHYLAMINE		290	UJ	C	270	UJ	C	280	UJ	C	280	UJ	C
N-NITROSO-DI-N-PROPYLAMINE		290	U		270	U		280	U		280	U	
N-NITROSODIPHENYLAMINE		290	U		270	U		280	U		280	U	
N-NITROSOPYRROLIDINE		290	U		270	U		280	U		280	U	
PENTACHLOROPHENOL		720	U		680	U		700	U		700	U	
PHENOL		290	U		270	U		280	U		280	U	

PROJ_NO: 02124 SDG: WE19-10 FRACTION: OS MEDIA: SOIL	NSAMPLE	B179-SB-DUP03		
	LAB_ID	SD7324-9		
	SAMP_DATE	11/22/2010		
	QC_TYPE	FD		
	UNITS	UG/KG		
	PCT_SOLIDS	75.5		
	DUP_OF	B179-SB2-0204		
PARAMETER		RESULT	VQL	QLCD
DIETHYL PHTHALATE		310	U	
DIMETHYL PHTHALATE		310	U	
DI-N-BUTYL PHTHALATE		310	U	
DI-N-OCTYL PHTHALATE		310	U	
HEXACHLOROBENZENE		310	U	
HEXACHLOROETHANE		310	U	
ISOPHORONE		310	U	
NITROBENZENE		310	U	
N-NITROSODIMETHYLAMINE		310	UJ	C
N-NITROSO-DI-N-PROPYLAMINE		310	U	
N-NITROSODIPHENYLAMINE		310	U	
N-NITROSOPYRROLIDINE		310	U	
PENTACHLOROPHENOL		770	U	
PHENOL		310	U	

PROJ_NO: 02124	NSAMPLE	B179-SB2-0001			B179-SB2-0001DL			B179-SB2-0204			B179-SB3-0001		
SDG: WE19-10	LAB_ID	SD7324-1			SD7324-1DL			SD7324-3			SD7324-5		
FRACTION: PAH	SAMP_DATE	11/22/2010			11/22/2010			11/22/2010			11/22/2010		
MEDIA: SOIL	QC_TYPE	NM			NM			NM			NM		
	UNITS	UG/KG			UG/KG			UG/KG			UG/KG		
	PCT_SOLIDS	80.8			80.8			84.9			88.0		
	DUP_OF												
PARAMETER		RESULT	VQL	QLCD	RESULT	VQL	QLCD	RESULT	VQL	QLCD	RESULT	VQL	QLCD
2-METHYLNAPHTHALENE		12	U					11	U		11	U	
ACENAPHTHENE		19	J	EP				5.8	J	EP	6.5	J	EP
ACENAPHTHYLENE		12	UJ	CE				11	UJ	CE	8.8	J	CEP
ANTHRACENE		64						2.8	J	P	4.3	J	P
BENZO(A)ANTHRACENE		170						16	J	P	27		
BENZO(A)PYRENE		100						13	J	P	24		
BENZO(B)FLUORANTHENE		160						17	J	P	31		
BENZO(G,H,I)PERYLENE		51						5.4	J	P	15	J	P
BENZO(K)FLUORANTHENE		46						4.8	J	P	10	J	P
CHRYSENE		130						8.1	J	P	20	J	P
DIBENZO(A,H)ANTHRACENE		12	J	P				11	U		11	U	
FLUORANTHENE					490			21	J	P	43		
FLUORENE		25	J	CE				11	UJ	CE	10	J	CEP
INDENO(1,2,3-CD)PYRENE		47						6	J	P	14	J	P
NAPHTHALENE		12	U					11	U		11	U	
PHENANTHRENE		280						9.9	J	P	36		
PYRENE					400			15	J	P	56		

PROJ_NO: 02124	NSAMPLE	B179-SB3-0406			B179-SB-DUP03		
SDG: WE19-10	LAB_ID	SD7324-7			SD7324-9		
FRACTION: PAH	SAMP_DATE	11/22/2010			11/22/2010		
MEDIA: SOIL	QC_TYPE	NM			FD		
	UNITS	UG/KG			UG/KG		
	PCT_SOLIDS	86.4			75.5		
	DUP_OF				B179-SB2-0204		
PARAMETER		RESULT	VQL	QLCD	RESULT	VQL	QLCD
2-METHYLNAPHTHALENE		11	U		12	U	
ACENAPHTHENE		6.2	J	EP	6.6	J	EP
ACENAPHTHYLENE		11	UJ	CE	9.7	J	CEP
ANTHRACENE		2.7	J	P	1.8	J	P
BENZO(A)ANTHRACENE		16	J	P	13	J	P
BENZO(A)PYRENE		13	J	P	9.3	J	P
BENZO(B)FLUORANTHENE		17	J	P	14	J	P
BENZO(G,H,I)PERYLENE		5.8	J	P	4.1	J	P
BENZO(K)FLUORANTHENE		5	J	P	12	U	
CHRYSENE		8.1	J	P	5.2	J	P
DIBENZO(A,H)ANTHRACENE		11	U		12	U	
FLUORANTHENE		19	J	P	11	J	P
FLUORENE		9.8	J	CEP	10	J	CEP
INDENO(1,2,3-CD)PYRENE		5.7	J	P	3.3	J	P
NAPHTHALENE		11	U		12	U	
PHENANTHRENE		13	J	P	6.7	J	P
PYRENE		18	J	P	9.8	J	P

PROJ_NO: 02124	NSAMPLE	B179-SB2-0001			B179-SB2-0204			B179-SB3-0001			B179-SB3-0406		
SDG: WE19-10	LAB_ID	SD7324-1			SD7324-3			SD7324-5			SD7324-7		
FRACTION: PEST	SAMP_DATE	11/22/2010			11/22/2010			11/22/2010			11/22/2010		
MEDIA: SOIL	QC_TYPE	NM			NM			NM			NM		
	UNITS	UG/KG			UG/KG			UG/KG			UG/KG		
	PCT_SOLIDS	80.8			84.9			88.0			86.4		
	DUP_OF												
PARAMETER		RESULT	VQL	QLCD	RESULT	VQL	QLCD	RESULT	VQL	QLCD	RESULT	VQL	QLCD
4,4'-DDD		2	U		1.9	U		3.6	J	P	1.8	U	
4,4'-DDE		3.2	J	P	0.36	J	P	0.89	J	P	0.37	J	P
4,4'-DDT		1.6	J	PU	1.9	U		1.2	J	PU	1.8	U	
ALDRIN		1	U		0.99	U		0.95	U		0.94	U	
ALPHA-BHC		1	U		0.99	U		0.95	U		0.94	U	
ALPHA-CHLORDANE		1	U		0.99	U		0.95	U		0.94	U	
BETA-BHC		1	U		0.99	U		0.95	U		0.94	U	
DELTA-BHC		1	U		0.99	U		0.95	U		0.94	U	
DIELDRIN		2	U		1.9	U		1.8	U		1.8	U	
ENDOSULFAN I		1	U		0.99	U		0.95	U		0.94	U	
ENDOSULFAN II		2	U		1.9	U		1.8	U		1.8	U	
ENDOSULFAN SULFATE		2	U		1.9	U		1.8	U		1.8	U	
ENDRIN		2	U		1.9	U		1.8	U		1.8	U	
ENDRIN ALDEHYDE		2	U		1.9	U		1.8	U		1.8	U	
ENDRIN KETONE		2	U		1.9	U		1.8	U		1.8	U	
GAMMA-BHC (LINDANE)		1	U		0.99	U		0.95	U		0.94	U	
GAMMA-CHLORDANE		1	U		0.99	U		0.95	U		0.94	U	
HEPTACHLOR		1	U		0.99	U		0.95	U		0.94	U	
HEPTACHLOR EPOXIDE		1	U		0.99	U		0.95	U		0.94	U	
METHOXYCHLOR		10	U		9.9	U		9.5	U		9.4	U	
TOXAPHENE		20	U		19	U		18	U		18	U	

PROJ_NO: 02124	NSAMPLE	B179-SB-DUP03
SDG: WE19-10	LAB_ID	SD7324-9
FRACTION: PEST	SAMP_DATE	11/22/2010
MEDIA: SOIL	QC_TYPE	FD
	UNITS	UG/KG
	PCT_SOLIDS	75.5
	DUP_OF	B179-SB2-0204

PARAMETER	RESULT	VQL	QLCD
4,4'-DDD	2.1	U	
4,4'-DDE	0.38	J	P
4,4'-DDT	2.1	U	
ALDRIN	1.1	U	
ALPHA-BHC	1.1	U	
ALPHA-CHLORDANE	1.1	U	
BETA-BHC	1.1	U	
DELTA-BHC	1.1	U	
DIELDRIN	2.1	U	
ENDOSULFAN I	1.1	U	
ENDOSULFAN II	2.1	U	
ENDOSULFAN SULFATE	2.1	U	
ENDRIN	2.1	U	
ENDRIN ALDEHYDE	2.1	U	
ENDRIN KETONE	2.1	U	
GAMMA-BHC (LINDANE)	1.1	U	
GAMMA-CHLORDANE	1.1	U	
HEPTACHLOR	1.1	U	
HEPTACHLOR EPOXIDE	1.1	U	
METHOXYCHLOR	11	U	
TOXAPHENE	20	U	

PROJ_NO: 02124	NSAMPLE	B179-SB2-0001			B179-SB2-0204			B179-SB3-0001			B179-SB3-0406		
SDG: WE19-10	LAB_ID	SD7324-1			SD7324-3			SD7324-5			SD7324-7		
FRACTION: PCB	SAMP_DATE	11/22/2010			11/22/2010			11/22/2010			11/22/2010		
MEDIA: SOIL	QC_TYPE	NM			NM			NM			NM		
	UNITS	UG/KG			UG/KG			UG/KG			UG/KG		
	PCT_SOLIDS	80.8			84.9			88.0			86.4		
	DUP_OF												
PARAMETER		RESULT	VQL	QLCD	RESULT	VQL	QLCD	RESULT	VQL	QLCD	RESULT	VQL	QLCD
AROCLOR-1016		10	U		9.9	U		9.5	U		9.4	U	
AROCLOR-1221		10	U		9.9	U		9.5	U		9.4	U	
AROCLOR-1232		12	U		12	U		11	U		11	U	
AROCLOR-1242		10	U		9.9	U		9.5	U		9.4	U	
AROCLOR-1248		10	U		9.9	U		9.5	U		9.4	U	
AROCLOR-1254		10	U		9.9	U		9.5	U		9.4	U	
AROCLOR-1260		10	U		9.9	U		9.5	U		9.4	U	
AROCLOR-1268		10	U		9.9	U		9.5	U		9.4	U	

PROJ_NO: 02124	NSAMPLE	B179-SB-DUP03		
SDG: WE19-10	LAB_ID	SD7324-9		
FRACTION: PCB	SAMP_DATE	11/22/2010		
MEDIA: SOIL	QC_TYPE	FD		
	UNITS	UG/KG		
	PCT_SOLIDS	75.5		
	DUP_OF	B179-SB2-0204		
PARAMETER		RESULT	VQL	QLCD
AROCLOR-1016		11	U	
AROCLOR-1221		11	U	
AROCLOR-1232		13	U	
AROCLOR-1242		11	U	
AROCLOR-1248		11	U	
AROCLOR-1254		11	U	
AROCLOR-1260		11	U	
AROCLOR-1268		11	U	

TETRA TECH NUS, INC **INTERNAL CORRESPONDENCE**

C-NAVY-02-11-4195W

Date: February 24, 2011

c: File G02124-4.10 (w/enc.-original)
D. Seiken (w/o enc.)

To: J. Ropp (w/o enc.)

From: P. DiMattei (no copy)

Subject: Tier II Organic Data Validation, SDG 63252
APPL, Inc.
CTO WE19, Site 08 – NUSC Disposal Area, Naval Station Newport, Middletown, RI

PGDN:
5/Soils/ B179-SB2-0001, B179-SB2-0204, B179-SB3-0001, B179-SB3-0406, B179-SB-DUP03

(Field duplicate pair: B179-SB2-0204/B179-SB-DUP03)

Tetra Tech NUS, Inc. (TtNUS) performed a Tier II data validation on the 1,2-propylene glycol dinitrate (PGDN) analytical data for the soil samples collected at Site 08 at the Naval Undersea System Center (NUSC) Disposal Area, Naval Station Newport, Middletown, Rhode Island site on November 22, 2010. Sample analysis was performed according to the Work Plan for Remedial Investigation Revision 2 for Site 08 – NUSC Disposal Area, Naval Station Newport, Middletown, Rhode Island dated January 2007 and Addendum dated June 2010.

The PGDN analysis was performed in accordance with SW-846 Method 8330. The data validation was performed in accordance with the Region I EPA-NE Data Validation Functional Guidelines for Evaluating Environmental Analyses, December 1996.

The sample results, validation qualifiers (VQL), and qualifier codes (QLCD) are presented in the enclosed data summary tables. A list of the qualifier codes, which provide the reasons for the validation qualifiers, is enclosed. The PGDN data is provided in the data summary table with the header indicating the fraction as "EXP".

The data were evaluated based on the following parameters:

	• Laboratory Data Completeness
*	• Preservation and Technical Holding Times
*	• GC/MS Instrument Performance Check (Tuning)
*	• Initial and Continuing Calibrations
*	• Blanks
*	• Surrogate Compounds
*	• Internal Standards
NA	• Matrix Spike/Matrix Spike Duplicate
*	• Laboratory Control Sample/Laboratory Control Sample Duplicate
*	• Field Duplicates
*	• Compound Identification/Quantitation
NA	• Percent Solids

* • Limits of Detection

* All criteria were met for this parameter.
NA Not applicable for this SDG.

Laboratory Data Completeness

On February 7, 2011 the laboratory clarified that the percent solids determinations are not performed since the samples are dried prior to sample extraction/analysis. Thus, all samples are considered reported as 100% dry.

Limits of Detection

Non-detected PGDN results were reported to the limit of detection (LOD). The laboratory screens for results that are below the limit of quantitation (LOQ) and above the method detection limit (MDL). When detected, these results are qualified as estimated (J) due to uncertainty below the LOQ. PGDN was not detected in any sample in this data set.

The PGDN PAL was evaluated for non-detected results (reported at the LOD). The PGDN PAL was met by the LODs.

Analytical Data Usability Assessment

The data usability assessment was performed to determine if the analytical data reported by the laboratory for this SDG met the project data quality objectives for acceptable accuracy, precision, sensitivity, and completeness; and to determine and define the impact of the exceeded quality control indicators on the technical usability of the data. Please refer to the specific sections in the above validation report for further details.

This is a partial evaluation based on laboratory quality control (QC) and limited field information available at the time of the assessment. A comprehensive project data usability assessment will be performed later when all data are available.

The project goals with respect to accuracy, precision, sensitivity, and laboratory data completeness were met for the PGDN data set. Data usability is not impacted with regards to accuracy, precision, sensitivity, and laboratory data completeness.

Tables: Data Summary Tables
Data Validation Qualifiers and Codes

Enclosures: Data Validation Worksheets

Data Validation Qualifiers and Codes

Data Validation Qualifiers:

= No qualifier attached to value (positive hit)
J = Value is estimated
U = Value is not detected
UJ = Value is not detected and estimated
R = Value (positive hit) is not usable
UR = Value was reported as ND but is not usable

Qualifier Codes:

A = Lab Blank Contamination
B = Field Blank Contamination
C = Calibration Noncompliance (e.g. % RSDs, %Ds, ICVs, CCVs, RRFs, etc.)
C01 = GC/MS Tuning Noncompliance
D = MS/MSD Recovery Noncompliance
E = LCS/LCSD Recovery Noncompliance
F = Lab Duplicate Imprecision
G = Field Duplicate Imprecision
H = Holding Time Exceedance
I = ICP Serial Dilution Noncompliance
J = GFAA PDS - GFAA MSA's $r < 0.995$
K = ICP Interference - includes ICS % R Noncompliance
L = Instrument Calibration Range Exceedance
M = Sample Preservation Noncompliance
N = Internal Standard Noncompliance
N01 = Internal Standard Recovery Noncompliance Dioxins
N02 = Recovery Standard Noncompliance Dioxins
N03 = Clean-up Standard Noncompliance Dioxins
O = Poor Instrument Performance (e.g. base-line drifting)
P = Uncertainty below quantitation limit (< QL but ≥ MDL)
Q = Other problems (can encompass a number of issues; e.g. chromatography,interferences, etc.)
R = Surrogates Recovery Noncompliance
S = Pesticide/PCB Resolution
T = % Breakdown Noncompliance for DDT and Endrin
U = % Difference between columns/detectors >25% for positive results determined via GC/HPLC
V = Non-linear calibrations; correlation coefficient $r < 0.995$
W = EMPC result
X = Signal to noise response drop
Y = Percent solids <30%
Z = Uncertainty at 2 sigma deviation is greater than sample activity

PROJ_NO: 02124	NSAMPLE	B179-SB2-0001			B179-SB2-0204			B179-SB3-0001			B179-SB3-0406		
SDG: 63252	LAB_ID	AY27348			AY27349			AY27350			AY27351		
FRACTION: EXP	SAMP_DATE	11/22/2010			11/22/2010			11/22/2010			11/22/2010		
MEDIA: SOIL	QC_TYPE	NM			NM			NM			NM		
	UNITS	UG/KG			UG/KG			UG/KG			UG/KG		
	PCT_SOLIDS	100.0			100.0			100.0			100.0		
	DUP_OF												
PARAMETER		RESULT	VQL	QLCD	RESULT	VQL	QLCD	RESULT	VQL	QLCD	RESULT	VQL	QLCD
1,2-PROPYLENE GLYCOL DINITRATE		100	U		100	U		100	U		100	U	

PROJ_NO: 02124	NSAMPLE	B179-SB-DUP03		
SDG: 63252	LAB_ID	AY27352		
FRACTION: EXP	SAMP_DATE	11/22/2010		
MEDIA: SOIL	QC_TYPE	FD		
	UNITS	UG/KG		
	PCT_SOLIDS	100.0		
	DUP_OF	B179-SB2-0204		
PARAMETER		RESULT	VQL	QLCD
1,2-PROPYLENE GLYCOL DINITRATE		100	U	

ATTACHMENT E

HISTORICAL GROUNDWATER DATA

SAMPLE ID	DA-A-MW01B-01-AVG	DA-A-MW02B-01	DA-MW02B-52708	DA-A-MW03B-01	DA-MW03B-52208	DA-MW-03B-062810-AVG	DA-A-MW04B-01	DA-MW04B-52308	DA-MW-04B-063010	DA-MW6A-062310	DA-MW6B-061710	DA-MW07A-52808	DA-MW7A-062210	DA-MW07B-52908	DA-MW7B-062310	DA-MW-08A-062910
LOCATION ID	DA-MW01B	DA-MW02B		DA-MW03B			DA-MW04B			DA-MW06A	DA-MW06B	DA-MW07A		DA-MW07B		DA-MW08A
SAMPLE DATE	09/04/03	09/03/03	05/27/08	09/05/03	05/22/08	06/28/10	09/04/03	05/23/08	06/30/10	06/23/10	06/17/10	05/28/08	06/22/10	05/29/08	06/23/10	06/29/10
SCREEN TOP DEPTH	10.0	7.0	7.0	4.0	4.0	4.0	15.0	15.0	15.0	0.0	25.0	0.0	0.0	18.0	18.0	0.0
SCREEN BOTTOM DEPTH	39.0	45.0	45.0	24.0	24.0	24.0	45.0	45.0	45.0	8.3	35.6	10.0	10.0	28.0	28.0	4.7
WELL DEPTH	40	45	45	24	24	24	45	45	45	8.3	35.6	10	10	28.72	28.72	4.67
SACODE	AVG	NORMAL	NORMAL	NORMAL	NORMAL	AVG	NORMAL	NORMAL	NORMAL	NORMAL	NORMAL	NORMAL	NORMAL	NORMAL	NORMAL	NORMAL
QC TYPE	NM	NM	NM	NM	NM	NM	NM	NM	NM	NM	NM	NM	NM	NM	NM	NM
VOLATILES (UG/L)																
1,1,1,2-TETRACHLOROETHANE	0.31 U	0.31 U	1 U	7.7 U	1 U	0.5 U	0.31 U	1 U	0.5 U	0.5 U	0.5 U	1 U	0.5 U	1 U	0.5 U	0.5 U
1,1,1-TRICHLOROETHANE	0.25 U	0.25 U	1 U	6.2 U	2	1.95	0.46 J	0.4 J	0.29 J	0.5 U	0.5 U	260	290	1600	440	0.5 U
1,1,2,2-TETRACHLOROETHANE	0.29 U	0.29 U	1 U	7.4 U	1 U	0.5 U	0.29 U	1 U	0.5 U	0.5 U	0.5 U	1 U	0.5 U	1 U	0.5 U	0.5 U
1,1,2-TRICHLOROETHANE	0.16 U	0.16 U	1 U	4 U	1 U	0.5 U	0.16 U	1 U	0.5 U	0.5 U	0.5 U	1 U	0.5 U	0.3 J	0.5 U	0.5 U
1,1-DICHLOROETHANE	0.19 U	0.19 U	1 U	4.7 U	2	2.95	49	23	24	0.5 U	0.5 U	380	440	1000	1000	0.5 U
1,1-DICHLOROETHENE	0.38 U	0.38 U	1 U	9.4 U	0.5 J	0.505 J	0.38 U	1	0.77 J	0.5 UJ	0.5 U	4	15	58 J	11 J	0.5 U
1,1-DICHLOROPROPENE	0.34 U	0.34 U	1 U	8.5 U	1 U	0.5 U	0.34 U	1 U	0.5 U	0.5 U	0.5 U	1 U	0.5 U	1 U	0.5 U	0.5 U
1,2,3-TRICHLOROBENZENE	0.38 U	0.38 U	1 U	9.6 U	1 U	0.5 U	0.38 U	1 U	0.5 U	0.5 U	0.5 U	1 U	0.5 U	1 U	0.5 U	0.5 U
1,2,3-TRICHLOROPROPANE	0.22 U	0.22 U	1 U	5.6 U	1 U	0.5 U	0.22 U	1 U	0.5 U	0.5 UJ	0.5 U	1 U	0.5 U	1 U	0.5 UJ	0.5 U
1,2,4-TRICHLOROBENZENE	0.28 U	0.28 U	1 U	1.2 UJ	1 U	0.5 U	0.28 U	1 U	0.5 U	0.5 U	0.5 U	1 U	0.5 U	1 U	0.5 U	0.5 U
1,2,4-TRIMETHYLBENZENE	0.25 U	0.25 U	1 U	6.4 U	1 U	0.5 U	0.25 U	1 U	0.5 U	0.5 U	0.5 U	1 U	3.6	5 J	0.51 J	0.5 U
1,2-DIBROMO-3-CHLOROPROPANE	1.6 U	1.6 U	1 U	39 U	1 U	0.75 U	1.6 U	1 U	0.75 U	0.75 U	0.75 U	1 U	0.75 U	1 U	0.75 U	0.75 U
1,2-DIBROMOETHANE	0.22 U	0.22 U	1 U	5.6 U	1 U	0.5 U	0.22 U	1 U	0.5 U	0.5 UJ	0.5 U	1 U	0.5 U	1 U	0.5 UJ	0.5 U
1,2-DICHLOROBENZENE	0.15 U	0.15 U	1 U	1.3 U	1 U	0.5 U	0.15 U	1 U	0.5 U	0.5 U	0.5 U	1 U	0.5 U	1 U	0.5 U	0.5 U
1,2-DICHLOROETHANE	0.14 U	0.14 U	1 U	3.5 U	1 U	0.5 U	0.14 U	1 U	0.5 U	0.5 U	0.5 U	1 U	0.5 U	1 U	0.5 U	0.5 U
1,2-DICHLOROPROPANE	0.24 U	0.24 U	1 U	6 U	1 U	0.5 U	0.24 U	1 U	0.5 U	0.5 U	0.5 U	1 U	0.5 U	1 U	0.5 U	0.5 U
1,3,5-TRIMETHYLBENZENE	0.27 U	0.27 U	1 U	6.8 U	1 U	0.5 U	0.27 U	1 U	0.5 U	0.5 U	0.5 U	1 U	0.66 J	1 J	0.5 U	0.5 U
1,3-DICHLOROBENZENE	0.2 U	0.20 U	1 U	1.2 U	1 U	0.5 U	0.20 U	1 U	0.5 U	0.5 U	0.5 U	1 U	0.5 U	1 U	0.5 U	0.5 U
1,3-DICHLOROPROPANE	0.17 U	0.17 U	1 U	4.3 U	1 U	0.5 U	0.17 U	1 U	0.5 U	0.5 U	0.5 U	1 U	0.5 U	1 U	0.5 U	0.5 U
1,4-DICHLOROBENZENE	0.23 U	0.23 U	1 U	1.3 U	1 U	0.5 U	0.23 U	1 U	0.5 U	0.5 U	0.5 U	1 U	0.5 U	1 U	0.5 U	0.5 U
2,2-DICHLOROPROPANE	0.63 U	0.63 U	1 U	16 U	1 U	0.5 U	0.63 U	1 U	0.5 U	0.5 U	0.5 U	1 U	0.5 U	1 U	0.5 U	0.5 U
2-BUTANONE	1.7 U	1.7 U	5 U	42 U	5 UJ	2.5 U	1.7 U	5 U	2.5 U	2.5 U	2.5 U	5 U	2.5 U	5 U	2.5 U	2.5 U
2-CHLOROTOLUENE	0.24 U	0.24 U	1 U	5.9 U	1 U	0.5 U	0.24 U	1 U	0.5 U	0.5 U	0.5 U	1 U	0.5 U	1 U	0.5 U	0.5 U
2-HEXANONE	1.8 U	1.8 U	5 U	45 U	5 UJ	2.5 U	1.8 U	5 U	2.5 U	2.5 U	2.5 U	5 U	2.5 U	5 U	2.5 U	2.5 U
4-CHLOROTOLUENE	0.24 U	0.24 U	1 U	6.1 U	1 U	0.5 U	0.24 U	1 U	0.5 U	0.5 U	0.5 U	1 U	0.5 U	1 U	0.5 U	0.5 U
4-ISOPROPYLTOLUENE	0.33 U	0.33 U	1 U	8.3 U	1 U	0.5 U	0.33 U	1 U	0.5 U	0.5 U	0.5 U	1 U	0.5 U	1 U	0.5 U	0.5 U
4-METHYL-2-PENTANONE	0.4 U	0.40 U	5 U	10 U	5 U	2.5 U	0.40 U	5 U	2.5 U	2.5 UJ	2.5 UJ	5 U	2.5 UJ	5 U	2.5 UJ	2.5 U
ACETONE	1.5 U	1.5 U	5 U	37 U	5 UJ	2.5 U	1.5 U	5 U	4.4 U	11	3.6 J	9	5.2	3 J	9.6	2.5 UJ
BENZENE	0.29 U	0.29 U	1 U	7.3 U	1 U	0.5 U	0.29 U	1 U	0.5 U	0.5 U	0.5 U	1 U	0.5 U	1 U	0.5 U	0.5 U
BROMOBENZENE	0.15 U	0.15 U	1 U	3.7 U	1 U	0.5 U	0.15 U	1 U	0.5 U	0.5 U	0.5 U	1 U	0.5 U	1 U	0.5 U	0.5 U
BROMOCHLOROMETHANE	0.19 U	0.19 U	1 U	4.8 U	1 U	0.5 U	0.19 U	1 U	0.5 U	0.5 U	0.5 U	1 U	0.5 U	1 U	0.5 U	0.5 U
BROMODICHLOROMETHANE	0.24 U	0.24 U	1 U	6 U	1 U	0.5 U	0.24 U	1 U	0.5 U	0.5 U	0.5 U	1 U	0.5 U	1 U	0.5 U	0.5 U
BROMOFORM	1.1 U	1.1 U	1 U	27 U	1 U	0.5 U	1.1 U	1 U	0.5 U	0.5 U	0.5 U	1 U	0.5 U	1 U	0.5 U	0.5 U

SHADED - DETECTED
U-NOT DETECTED; J-QUANTITATION APPROXIMATE; R-REJECTED; NA-NOT ANALYZED

SAMPLE ID	DA-A-MW01B-01-AVG	DA-A-MW02B-01	DA-MW02B-52708	DA-A-MW03B-01	DA-MW03B-52208	DA-MW-03B-062810-AVG	DA-A-MW04B-01	DA-MW04B-52308	DA-MW-04B-063010	DA-MW6A-062310	DA-MW6B-061710	DA-MW07A-52808	DA-MW7A-062210	DA-MW07B-52908	DA-MW7B-062310	DA-MW-08A-062910
LOCATION ID	DA-MW01B	DA-MW02B		DA-MW03B			DA-MW04B			DA-MW06A	DA-MW06B	DA-MW07A		DA-MW07B		DA-MW08A
SAMPLE DATE	09/04/03	09/03/03	05/27/08	09/05/03	05/22/08	06/28/10	09/04/03	05/23/08	06/30/10	06/23/10	06/17/10	05/28/08	06/22/10	05/29/08	06/23/10	06/29/10
SCREEN TOP DEPTH	10.0	7.0	7.0	4.0	4.0	4.0	15.0	15.0	15.0	0.0	25.0	0.0	0.0	18.0	18.0	0.0
SCREEN BOTTOM DEPTH	39.0	45.0	45.0	24.0	24.0	24.0	45.0	45.0	45.0	8.3	35.6	10.0	10.0	28.0	28.0	4.7
WELL DEPTH	40	45	45	24	24	24	45	45	45	8.3	35.6	10	10	28.72	28.72	4.67
SACODE	AVG	NORMAL	NORMAL	NORMAL	NORMAL	AVG	NORMAL	NORMAL	NORMAL	NORMAL	NORMAL	NORMAL	NORMAL	NORMAL	NORMAL	NORMAL
QC TYPE	NM	NM	NM	NM	NM	NM	NM	NM	NM	NM	NM	NM	NM	NM	NM	NM
BROMOMETHANE	0.36 U	0.36 U	2 U	8.9 U	2 U	1 U	0.36 U	2 U	1 U	1 U	1 U	2 U	1 U	2 U	1 U	1 U
BTEX	0.32 U	0.32 U	1.1 U	7.9 U	1.1 U	0.562 U	0.32 U	1.1 U	0.562 U	0.562 U	0.562 U	0.3 J	2.23 J	5 J	0.34 J	0.562 U
CARBON DISULFIDE	0.27 U	0.27 U	1 U	6.8 U	1 U	0.5 U	0.27 U	1 U	0.5 U	0.5 U	0.5 U	1 U	0.5 U	1 U	0.5 U	0.5 U
CARBON TETRACHLORIDE	0.38 U	0.38 U	1 U	9.4 U	2	1.85	0.38 U	1 U	0.5 U	0.5 U	0.5 U	1 U	0.5 U	1 U	0.5 U	0.5 U
CHLOROBENZENE	0.32 U	0.32 U	1 U	7.9 U	1 U	0.5 U	0.32 U	1 U	0.5 U	0.5 U	0.5 U	1 U	0.5 U	1 U	0.5 U	0.5 U
CHLORODIBROMOMETHANE	0.19 U	0.19 U	1 U	4.7 U	1 U	0.5 U	0.19 U	1 U	0.5 U	0.5 U	0.5 U	1 U	0.5 U	1 U	0.5 U	0.5 U
CHLOROETHANE	0.36 U	0.36 U	2 U	9 U	2 U	1 U	0.36 U	2 U	1 U	1 U	1 U	85	1 U	22 J	1000	1 U
CHLOROFORM	0.14 U	0.14 U	1 U	3.4 U	1 U	0.49 U	0.14 U	1 U	0.5 U	0.5 U	0.5 U	1 U	0.5 U	1 U	0.5 U	0.5 U
CHLOROMETHANE	0.12 U	0.12 U	2 U	3 U	2 U	1 U	0.12 U	2 U	1 U	1 U	1 U	2 U	1 U	2 U	1 U	0.37 J
CIS-1,2-DICHLOROETHENE	2.2	0.61	0.3 J	4.6 U	1 J	1.19 J	6.4	0.6 J	0.41 J	0.5 U	0.5 U	1	0.5 U	1 U	2.2	0.5 U
CIS-1,3-DICHLOROPROPENE	0.13 U	0.13 U	1 U	3.2 U	1 U	0.5 U	0.13 U	1 U	0.5 U	0.5 U	0.5 U	1 U	0.5 U	1 U	0.5 U	0.5 U
DIBROMOMETHANE	0.19 U	0.19 U	1 U	4.8 U	1 U	0.5 U	0.19 U	1 U	0.5 U	0.5 U	0.5 U	1 U	0.5 U	1 U	0.5 U	0.5 U
DICHLORODIFLUOROMETHANE	0.3 U	0.30 U	2 U	7.5 U	2 U	1 U	0.30 U	2 U	1 U	1 U	1 U	2 U	1 U	2 U	1 U	1 U
ETHYLBENZENE	0.28 U	0.28 U	1 U	7 U	1 U	0.5 U	0.28 U	1 U	0.5 U	0.5 U	0.5 U	1 U	0.76 J	1 J	0.5 U	0.5 U
HEXACHLOROBUTADIENE	0.43 U	0.43 U	1 UJ	1.3 UJ	1 U	0.5 U	0.43 U	1 U	0.5 U	0.5 U	0.5 U	1 UJ	0.5 U	1 UJ	0.5 U	0.5 U
ISOPROPYLBENZENE	0.26 U	0.33 J	1 U	6.5 U	1 U	0.5 U	0.26 U	1 U	0.5 U	0.5 U	0.5 U	1 U	0.51 J	0.5 J	1.3	0.5 U
M+P-XYLENES	0.38 U	0.38 U	2 U	9.6 U	2 U	1 U	0.38 U	2 U	1 U	1 U	1 U	2 U	1 U	1 J	1 U	1 U
METHYL TERT-BUTYL ETHER	0.12 U	0.12 U	1 U	2.9 U	1 U	0.5 U	0.12 U	1 U	0.5 U	0.5 U	0.5 U	1 U	0.5 U	1 U	0.5 U	0.5 U
METHYLENE CHLORIDE	0.37 U	0.37 U	5 U	9.2 U	5 U	2.5 U	0.37 U	5 U	2.5 U	2.5 U	2.5 U	5 U	2.5 U	5 U	2.5 U	2.5 U
N-BUTYLBENZENE	0.41 U	0.41 U	1 U	10 U	1 U	0.5 U	0.41 U	1 U	0.5 U	0.5 U	0.5 U	1 U	0.39 J	2 J	0.5 U	0.5 U
N-PROPYLBENZENE	0.32 U	0.32 U	1 U	8 U	1 U	0.5 U	0.32 U	1 U	0.5 U	0.5 U	0.5 U	1 U	0.9 J	1 J	0.5 U	0.5 U
O-XYLENE	0.3 U	0.30 U	1 U	7.6 U	1 U	0.5 U	0.30 U	1 U	0.5 U	0.5 U	0.5 U	0.3 J	0.79 J	1 J	0.34 J	0.5 U
SEC-BUTYLBENZENE	0.4 U	3.3	2	10 U	1 U	0.5 U	0.40 U	1 U	0.5 U	0.5 U	0.5 U	1 U	0.48 J	0.5 J	0.89 J	0.5 U
STYRENE	0.44 U	0.44 U	1 U	11 U	1 U	0.5 U	0.44 U	1 U	0.5 U	0.5 U	0.5 U	1 U	0.5 U	1 U	0.5 U	0.5 U
TERT-BUTYLBENZENE	0.29 U	0.97 J	1 U	7.2 U	1 U	0.5 U	0.29 U	1 U	0.5 U	0.5 U	0.5 U	1 U	0.5 U	1 U	0.34 J	0.5 U
TETRACHLOROETHENE	2.2	0.43 U	1 U	11 U	1 U	0.66 J	8.4	1 U	0.5 U	0.5 U	0.5 U	2	0.53 J	2 J	8.3	0.5 U
TOLUENE	0.31 U	0.31 U	1 U	7.8 U	1 U	0.5 U	0.31 U	1 U	0.5 U	0.5 U	0.5 U	1 U	0.68 J	2 J	0.5 U	0.5 U
TOTAL 1,2-DICHLOROETHENE	2.2	0.61	0.3 J	6.6 U	1 J	1.19 J	6.4	0.6 J	0.41 J	0.5 U	0.5 U	1	0.5 U	1 U	2.2	0.5 U
TOTAL CHLORINATED ETHENES	5.85	1.03 J	0.3 J	1500	191 J	152 J	19.06 J	0.6 J	1.18 J	0.6 UJ	0.6 U	3.9 J	17.2 J	6.8 J	25.4 J	0.6 U
TOTAL CHLORINATED VOCS	5.85	1.03 J	0.3 J	1500 J	197.5 J	158 J	68.52 J	25 J	25.5 J	0.602 UJ	0.602 U	732.9 J	747 J	2687.1 J	2470 J	0.37 J
TOTAL XYLENES	0.38 U	0.38 U	1.5 U	9.6 U	1.5 U	0.75 U	0.38 U	1.5 U	0.75 U	0.75 U	0.75 U	0.3 J	0.79 J	2 J	0.34 J	0.75 U
TRANS-1,2-DICHLOROETHENE	0.34 U	0.34 U	1 U	8.5 U	1 U	0.5 U	0.34 U	1 U	0.5 U	0.5 U	0.5 U	1 U	0.5 U	1 U	0.5 U	0.5 U
TRANS-1,3-DICHLOROPROPENE	0.24 U	0.24 U	1 U	6 U	1 U	0.5 U	0.24 U	1 U	0.5 U	0.5 U	0.5 U	1 U	0.5 U	1 U	0.5 U	0.5 U
TRICHLOROETHENE	1.45	0.42 J	1 U	1500	190	150 J	3.6	1 U	0.5 U	0.5 U	0.5 U	0.9 J	1 J	4 J	3.9	0.5 U
TRICHLOROFLUOROMETHANE	0.29 U	0.29 U	2 U	7.2 U	2 U	1 U	0.29 U	2 U	1 U	1 U	1 U	2 U	1 U	2 U	1 U	1 U
VINYL CHLORIDE	0.27 U	0.27 U	2 U	6.8 U	2 U	1 U	0.66 J	2 U	1 U	1 U	1 U	2 U	0.7 J	0.8 J	1 U	1 U

SHADED - DETECTED
U-NOT DETECTED; J-QUANTITATION APPROXIMATE; R-REJECTED; NA-NOT ANALYZED

SAMPLE ID	DA-A-MW01B-01-AVG	DA-A-MW02B-01	DA-MW02B-52708	DA-A-MW03B-01	DA-MW03B-52208	DA-MW-03B-062810-AVG	DA-A-MW04B-01	DA-MW04B-52308	DA-MW-04B-063010	DA-MW6A-062310	DA-MW6B-061710	DA-MW07A-52808	DA-MW7A-062210	DA-MW07B-52908	DA-MW7B-062310	DA-MW-08A-062910
LOCATION ID	DA-MW01B	DA-MW02B		DA-MW03B			DA-MW04B			DA-MW06A	DA-MW06B	DA-MW07A		DA-MW07B		DA-MW08A
SAMPLE DATE	09/04/03	09/03/03	05/27/08	09/05/03	05/22/08	06/28/10	09/04/03	05/23/08	06/30/10	06/23/10	06/17/10	05/28/08	06/22/10	05/29/08	06/23/10	06/29/10
SCREEN TOP DEPTH	10.0	7.0	7.0	4.0	4.0	4.0	15.0	15.0	15.0	0.0	25.0	0.0	0.0	18.0	18.0	0.0
SCREEN BOTTOM DEPTH	39.0	45.0	45.0	24.0	24.0	24.0	45.0	45.0	45.0	8.3	35.6	10.0	10.0	28.0	28.0	4.7
WELL DEPTH	40	45	45	24	24	24	45	45	45	8.3	35.6	10	10	28.72	28.72	4.67
SACODE	AVG	NORMAL	NORMAL	NORMAL	NORMAL	AVG	NORMAL	NORMAL	NORMAL	NORMAL	NORMAL	NORMAL	NORMAL	NORMAL	NORMAL	NORMAL
QC TYPE	NM	NM	NM	NM	NM	NM	NM	NM	NM	NM	NM	NM	NM	NM	NM	NM
VOLATILE GASES (UG/L)																
ETHANE	NA	NA	10 U	NA	10 U	2 U	NA	10 U	NA	NA	NA	10 U	2 U	10 U	2 U	NA
ETHENE	NA	NA	10 U	NA	10 U	2 U	NA	10 U	NA	NA	NA	10 U	2 U	10 U	2 U	NA
METHANE	NA	NA	NA	NA	NA	1.6 J	NA	NA	NA	NA	NA	NA	160 J	NA	14 J	NA
SEMIVOLATILES (UG/L)																
1,1-BIPHENYL	NA	NA	10 U	NA	10 U	NA	NA	10 U	NA	NA	NA	10 U	NA	11 U	NA	NA
1,2-DIPHENYLHYDRAZINE	1.6 U	1.6 U	20 U	1.6 U	20 U	NA	1.7 U	20 U	NA	NA	NA	20 U	NA	22 U	NA	NA
1,4-DIOXANE	NA	NA	NA	NA	NA	0.104 U	NA	NA	0.19 U	NA	NA	NA	0.47 U	NA	0.054 J	NA
2,2'-OXYBIS(1-CHLOROPROPANE)	2.3 U	2.4 U	10 U	2.4 U	10 U	NA	2.5 U	10 U	NA	NA	NA	10 U	NA	11 U	NA	NA
2,4,5-TRICHLOROPHENOL	3.5 U	3.6 U	25 UR	3.6 U	25 U	NA	3.8 U	25 UR	NA	NA	NA	25 UR	NA	27 UJ	NA	NA
2,4,6-TRICHLOROPHENOL	3.5 U	3.6 U	10 UR	3.6 U	10 U	NA	3.8 U	10 UR	NA	NA	NA	10 UR	NA	11 UJ	NA	NA
2,4-DICHLOROPHENOL	3.2 U	3.4 U	10 UR	3.4 U	10 U	NA	3.6 U	10 UR	NA	NA	NA	10 UR	NA	11 UJ	NA	NA
2,4-DIMETHYLPHENOL	3.5 UJ	3.7 UJ	10 UR	3.7 UJ	10 U	NA	3.9 UJ	10 UR	NA	NA	NA	10 UR	NA	11 UJ	NA	NA
2,4-DINITROPHENOL	2.3 U	2.4 U	25 UR	2.4 U	25 U	NA	2.6 U	25 UR	NA	NA	NA	25 UR	NA	27 UJ	NA	NA
2,4-DINITROTOLUENE	1.4 U	1.5 U	10 U	1.5 U	10 U	NA	1.6 U	10 U	NA	NA	NA	10 U	NA	11 U	NA	NA
2,6-DICHLOROPHENOL	2.3 U	2.4 U	10 UR	2.4 U	10 U	NA	2.5 U	10 UR	NA	NA	NA	10 UR	NA	11 UJ	NA	NA
2,6-DINITROTOLUENE	1.5 UJ	1.5 UJ	10 U	1.5 UJ	10 U	NA	1.6 UJ	10 U	NA	NA	NA	10 U	NA	11 U	NA	NA
2-CHLORONAPHTHALENE	1.5 UJ	1.6 UJ	10 U	1.6 UJ	10 U	NA	1.7 UJ	10 U	NA	NA	NA	10 U	NA	11 U	NA	NA
2-CHLOROPHENOL	3.2 U	3.3 U	10 UR	3.3 U	10 U	NA	3.5 U	10 UR	NA	NA	NA	10 UR	NA	11 UJ	NA	NA
2-METHYLNAPHTHALENE	4.2 UJ	4.4 UJ	10 U	4.4 UJ	10 U	NA	4.6 UJ	10 U	NA	NA	NA	10 U	NA	11 U	NA	NA
2-METHYLPHENOL	3.1 UJ	3.2 UJ	10 UR	3.2 UJ	10 U	NA	3.4 UJ	10 UR	NA	NA	NA	10 UR	NA	11 UJ	NA	NA
2-NITROANILINE	3.5 U	3.6 U	25 U	3.6 U	25 U	NA	3.8 U	25 U	NA	NA	NA	25 U	NA	27 U	NA	NA
2-NITROPHENOL	3 U	3.1 U	10 UR	3.1 U	10 U	NA	3.3 U	10 UR	NA	NA	NA	10 UR	NA	11 UJ	NA	NA
3&4-METHYLPHENOL	2.8 U	2.9 U	10 UR	2.9 U	10 U	NA	3.1 U	10 UR	NA	NA	NA	10 UR	NA	11 UJ	NA	NA
3,3'-DICHLOROBENZIDINE	5.2 U	5.4 U	10 UJ	5.4 U	10 UJ	NA	5.6 U	10 UJ	NA	NA	NA	10 UJ	NA	11 UJ	NA	NA
3-NITROANILINE	3.7 U	3.9 U	25 UJ	3.9 U	25 U	NA	4.1 U	25 U	NA	NA	NA	25 UJ	NA	27 UJ	NA	NA
4,6-DINITRO-2-METHYLPHENOL	2.3 U	2.4 U	25 UR	2.4 U	25 UJ	NA	2.5 U	25 UR	NA	NA	NA	25 UR	NA	27 UJ	NA	NA
4-BROMOPHENYL PHENYL ETHER	1.7 U	1.8 U	10 U	1.8 U	10 U	NA	1.9 U	10 U	NA	NA	NA	10 U	NA	11 U	NA	NA
4-CHLORO-3-METHYLPHENOL	3.3 U	3.4 U	25 UR	3.4 U	25 U	NA	3.6 U	25 UR	NA	NA	NA	25 UR	NA	27 UJ	NA	NA
4-CHLOROANILINE	4.6 UJ	4.7 UJ	10 U	4.7 UJ	10 U	NA	5 UJ	10 U	NA	NA	NA	10 U	NA	11 U	NA	NA
4-CHLOROPHENYL PHENYL ETHER	1.5 U	1.6 U	10 U	1.6 U	10 U	NA	1.7 U	10 U	NA	NA	NA	10 U	NA	11 U	NA	NA
4-NITROANILINE	2.7 U	2.8 U	25 UJ	2.8 U	25 UJ	NA	2.9 U	25 UJ	NA	NA	NA	25 UJ	NA	27 UJ	NA	NA
4-NITROPHENOL	1.9 U	2 U	25 UR	2 U	25 UJ	NA	2.1 U	25 UR	NA	NA	NA	25 UR	NA	27 UJ	NA	NA
ACENAPHTHENE	1.5 U	1.6 U	10 U	1.6 U	10 U	NA	1.6 U	10 U	NA	NA	NA	10 U	NA	11 U	NA	NA
ACENAPHTHYLENE	1.6 U	1.7 U	10 U	1.7 U	10 U	NA	1.8 U	10 U	NA	NA	NA	10 U	NA	11 U	NA	NA
ANTHRACENE	1.4 U	1.5 U	10 U	1.5 U	10 U	NA	1.6 U	10 U	NA	NA	NA	10 U	NA	11 U	NA	NA
BENZIDINE	44 U	46 UJ	50 UR	46 U	50 UR	NA	49 U	50 UR	NA	NA	NA	50 UR	NA	54 UR	NA	NA

SHADED - DETECTED
U-NOT DETECTED; J-QUANTITATION APPROXIMATE; R-REJECTED; NA-NOT ANALYZED

SAMPLE ID	DA-A-MW01B-01-AVG	DA-A-MW02B-01	DA-MW02B-52708	DA-A-MW03B-01	DA-MW03B-52208	DA-MW-03B-062810-AVG	DA-A-MW04B-01	DA-MW04B-52308	DA-MW-04B-063010	DA-MW6A-062310	DA-MW6B-061710	DA-MW07A-52808	DA-MW7A-062210	DA-MW07B-52908	DA-MW7B-062310	DA-MW-08A-062910
LOCATION ID	DA-MW01B	DA-MW02B		DA-MW03B			DA-MW04B			DA-MW06A	DA-MW06B	DA-MW07A		DA-MW07B		DA-MW08A
SAMPLE DATE	09/04/03	09/03/03	05/27/08	09/05/03	05/22/08	06/28/10	09/04/03	05/23/08	06/30/10	06/23/10	06/17/10	05/28/08	06/22/10	05/29/08	06/23/10	06/29/10
SCREEN TOP DEPTH	10.0	7.0	7.0	4.0	4.0	4.0	15.0	15.0	15.0	0.0	25.0	0.0	0.0	18.0	18.0	0.0
SCREEN BOTTOM DEPTH	39.0	45.0	45.0	24.0	24.0	24.0	45.0	45.0	45.0	8.3	35.6	10.0	10.0	28.0	28.0	4.7
WELL DEPTH	40	45	45	24	24	24	45	45	45	8.3	35.6	10	10	28.72	28.72	4.67
SACODE	AVG	NORMAL	NORMAL	NORMAL	NORMAL	AVG	NORMAL	NORMAL	NORMAL	NORMAL	NORMAL	NORMAL	NORMAL	NORMAL	NORMAL	NORMAL
QC TYPE	NM	NM	NM	NM	NM	NM	NM	NM	NM	NM	NM	NM	NM	NM	NM	NM
BENZO(A)ANTHRACENE	1.5 U	1.6 U	10 U	1.6 U	10 U	NA	1.7 U	10 U	NA	NA	NA	10 U	NA	11 U	NA	NA
BENZO(A)PYRENE	1.6 U	1.7 U	10 U	1.7 U	10 U	NA	1.8 U	10 U	NA	NA	NA	10 U	NA	11 U	NA	NA
BENZO(B)FLUORANTHENE	1.5 U	1.6 U	10 U	1.6 U	10 U	NA	1.6 U	10 U	NA	NA	NA	10 U	NA	11 U	NA	NA
BENZO(G,H,I)PERYLENE	1.6 U	1.6 U	10 U	1.6 U	10 U	NA	1.7 U	10 U	NA	NA	NA	10 U	NA	11 U	NA	NA
BENZO(K)FLUORANTHENE	1.7 U	1.7 U	10 U	1.7 U	10 U	NA	1.8 U	10 U	NA	NA	NA	10 U	NA	11 U	NA	NA
BENZOIC ACID	15 UJ	16 UJ	25 UR	16 UJ	25 UR	NA	16 UJ	25 UR	NA	NA	NA	25 UR	NA	27 UR	NA	NA
BENZYL ALCOHOL	3 U	3.1 U	20 U	3.1 U	20 U	NA	3.3 U	20 U	NA	NA	NA	20 U	NA	22 U	NA	NA
BIS(2-CHLOROETHOXY)METHANE	1.7 U	1.8 U	10 U	1.8 U	10 U	NA	1.9 U	10 U	NA	NA	NA	10 U	NA	11 U	NA	NA
BIS(2-CHLOROETHYL)ETHER	1.8 U	1.8 U	10 U	1.8 U	10 U	NA	1.9 U	10 U	NA	NA	NA	10 U	NA	11 U	NA	NA
BIS(2-ETHYLHEXYL)PHTHALATE	2.1 U	2.2 U	10 U	2.2 U	10 U	NA	2.3 U	10 U	NA	NA	NA	10 U	NA	11 U	NA	NA
BUTYL BENZYL PHTHALATE	2.2 U	2.2 U	10 U	2.2 U	10 U	NA	2.4 U	10 U	NA	NA	NA	10 U	NA	11 U	NA	NA
CARBAZOLE	1.8 U	1.8 U	10 U	1.8 U	10 U	NA	1.9 U	10 U	NA	NA	NA	10 U	NA	11 U	NA	NA
CHRYSENE	1.6 U	1.7 U	10 U	1.7 U	10 U	NA	1.8 U	10 U	NA	NA	NA	10 U	NA	11 U	NA	NA
DIBENZO(A,H)ANTHRACENE	1.8 U	1.9 U	10 U	1.9 U	10 U	NA	2 U	10 U	NA	NA	NA	10 U	NA	11 U	NA	NA
DIBENZOFURAN	3 UJ	3.1 UJ	10 U	3.1 UJ	10 U	NA	3.2 UJ	10 U	NA	NA	NA	10 U	NA	11 U	NA	NA
DIETHYL PHTHALATE	4.9 U	5.1 U	10 U	5.1 U	10 U	NA	5.4 U	10 U	NA	NA	NA	10 U	NA	11 U	NA	NA
DIMETHYL PHTHALATE	1.6 U	1.6 U	10 U	1.6 U	10 U	NA	1.7 U	10 U	NA	NA	NA	10 U	NA	11 U	NA	NA
DI-N-BUTYL PHTHALATE	1.9 U	2 U	10 U	2 U	10 U	NA	2.1 U	10 U	NA	NA	NA	10 U	NA	11 U	NA	NA
DI-N-OCTYL PHTHALATE	1.8 U	1.9 U	10 U	1.9 U	10 U	NA	2 U	10 UJ	NA	NA	NA	10 U	NA	11 U	NA	NA
FLUORANTHENE	1.8 U	1.8 U	10 U	1.8 U	10 U	NA	1.9 U	10 U	NA	NA	NA	10 U	NA	11 U	NA	NA
FLUORENE	1.4 U	1.5 U	10 U	1.5 U	10 U	NA	1.6 U	10 U	NA	NA	NA	10 U	NA	11 U	NA	NA
HEXACHLOROBENZENE	0.2 UR	0.20 UR	10 U	0.204 UR	10 U	NA	0.202 UR	10 U	NA	NA	NA	10 U	NA	11 U	NA	NA
HEXACHLOROETHANE	1 U	1 U	10 U	1 U	10 U	NA	1.1 U	10 U	NA	NA	NA	10 U	NA	11 U	NA	NA
HIGH MOLECULAR WEIGHT PAHS	1.7 U	1.7 U	10 U	1.7 U	10 U	NA	1.8 U	10 U	NA	NA	NA	10 U	NA	11 U	NA	NA
INDENO(1,2,3-CD)PYRENE	1.8 U	1.8 U	10 U	1.8 U	10 U	NA	1.9 U	10 U	NA	NA	NA	10 U	NA	11 U	NA	NA
ISOPHORONE	1.8 U	1.9 U	10 U	1.9 U	10 U	NA	2 U	10 U	NA	NA	NA	10 U	NA	11 U	NA	NA
LOW MOLECULAR WEIGHT PAHS	1.7 UJ	1.8 UJ	10 U	2 UJ	10 U	NA	1.9 UJ	10 U	NA	NA	NA	10 U	NA	11 U	NA	NA
NAPHTHALENE	0.41 U	0.41 U	10 U	1.5 U	10 U	NA	0.41 U	10 U	NA	NA	NA	10 U	NA	11 U	NA	NA
NITROBENZENE	1.8 U	1.9 U	10 U	1.9 U	10 U	NA	2 U	10 U	NA	NA	NA	10 U	NA	11 U	NA	NA
N-NITROSODIMETHYLAMINE	5.1 U	5.4 U	10 U	5.4 U	10 U	NA	5.6 U	10 U	NA	NA	NA	10 U	NA	11 U	NA	NA
N-NITROSO-DI-N-PROPYLAMINE	1.8 U	1.9 U	10 U	1.9 U	10 U	NA	2 U	10 U	NA	NA	NA	10 U	NA	11 U	NA	NA
N-NITROSODIPHENYLAMINE	1.9 U	2 U	10 U	2 U	10 U	NA	2.1 U	10 U	NA	NA	NA	10 U	NA	11 U	NA	NA
N-NITROSOPYRROLIDINE	2 UJ	2.1 UJ	10 U	2.1 UJ	10 U	NA	2.2 UJ	10 U	NA	NA	NA	10 U	NA	11 U	NA	NA
PENTACHLOROPHENOL	3.1 U	3.2 U	25 UR	3.2 U	25 U	NA	3.4 U	25 UR	NA	NA	NA	25 UR	NA	27 UJ	NA	NA
PHENANTHRENE	1.6 U	1.6 U	10 U	1.6 U	10 U	NA	1.7 U	10 U	NA	NA	NA	10 U	NA	11 U	NA	NA
PHENOL	1.8 UJ	1.8 UJ	10 UR	1.8 UJ	10 U	NA	1.9 UJ	10 UR	NA	NA	NA	10 UR	NA	11 UJ	NA	NA
PYRENE	1.7 U	1.8 U	10 U	1.8 U	10 U	NA	1.8 U	10 U	NA	NA	NA	10 U	NA	11 U	NA	NA
TOTAL PAHS	1.7 UJ	1.8 UJ	10 U	1.8 UJ	10 U	NA	1.8 UJ	10 U	NA	NA	NA	10 U	NA	11 U	NA	NA

SHADED - DETECTED
U-NOT DETECTED; J-QUANTITATION APPROXIMATE; R-REJECTED; NA-NOT ANALYZED

SAMPLE ID	DA-A-MW01B-01-AVG	DA-A-MW02B-01	DA-MW02B-52708	DA-A-MW03B-01	DA-MW03B-52208	DA-MW-03B-062810-AVG	DA-A-MW04B-01	DA-MW04B-52308	DA-MW-04B-063010	DA-MW6A-062310	DA-MW6B-061710	DA-MW07A-52808	DA-MW7A-062210	DA-MW07B-52908	DA-MW7B-062310	DA-MW-08A-062910
LOCATION ID	DA-MW01B	DA-MW02B		DA-MW03B			DA-MW04B			DA-MW06A	DA-MW06B	DA-MW07A		DA-MW07B		DA-MW08A
SAMPLE DATE	09/04/03	09/03/03	05/27/08	09/05/03	05/22/08	06/28/10	09/04/03	05/23/08	06/30/10	06/23/10	06/17/10	05/28/08	06/22/10	05/29/08	06/23/10	06/29/10
SCREEN TOP DEPTH	10.0	7.0	7.0	4.0	4.0	4.0	15.0	15.0	15.0	0.0	25.0	0.0	0.0	18.0	18.0	0.0
SCREEN BOTTOM DEPTH	39.0	45.0	45.0	24.0	24.0	24.0	45.0	45.0	45.0	8.3	35.6	10.0	10.0	28.0	28.0	4.7
WELL DEPTH	40	45	45	24	24	24	45	45	45	8.3	35.6	10	10	28.72	28.72	4.67
SACODE	AVG	NORMAL	NORMAL	NORMAL	NORMAL	AVG	NORMAL	NORMAL	NORMAL	NORMAL	NORMAL	NORMAL	NORMAL	NORMAL	NORMAL	NORMAL
QC TYPE	NM	NM	NM	NM	NM	NM	NM	NM	NM	NM	NM	NM	NM	NM	NM	NM
PESTICIDES/PCBS (UG/L)																
4,4'-DDD	0.007 U	0.007 U	0.02 U	0.00714 U	0.02 U	NA	0.00707 U	0.02 U	NA	NA	NA	0.02 U	NA	0.02 U	NA	NA
4,4'-DDE	0.003 U	0.003 U	0.02 U	0.00306 U	0.02 U	NA	0.00303 U	0.02 U	NA	NA	NA	0.02 U	NA	0.02 U	NA	NA
4,4'-DDT	0.002 U	0.002 U	0.02 U	0.00204 U	0.02 U	NA	0.00202 U	0.02 U	NA	NA	NA	0.02 U	NA	0.02 U	NA	NA
ALDRIN	0.002 U	0.002 U	0.01 U	0.00204 U	0.01 U	NA	0.00202 U	0.01 U	NA	NA	NA	0.01 U	NA	0.01 U	NA	NA
ALPHA-BHC	0.002 UJ	0.002 UJ	0.01 U	0.00204 UJ	0.01 U	NA	0.00202 UJ	0.01 U	NA	NA	NA	0.01 U	NA	0.01 U	NA	NA
ALPHA-CHLORDANE	0.001 U	0.001 U	0.01 U	0.00102 U	0.01 U	NA	0.00101 U	0.01 U	NA	NA	NA	0.01 U	NA	0.01 U	NA	NA
AROCLOR-1016	0.057 U	0.057 U	0.1 U	0.057 U	0.1 U	NA	0.057 U	0.11 U	NA	NA	NA	0.1 U	NA	0.1 U	NA	NA
AROCLOR-1221	0.057 U	0.057 U	0.1 U	0.057 U	0.1 U	NA	0.057 U	0.11 U	NA	NA	NA	0.1 U	NA	0.1 U	NA	NA
AROCLOR-1232	0.057 U	0.057 U	0.1 U	0.057 U	0.1 U	NA	0.057 U	0.11 U	NA	NA	NA	0.1 U	NA	0.1 U	NA	NA
AROCLOR-1242	0.057 U	0.057 U	0.1 U	0.057 U	0.1 U	NA	0.057 U	0.11 U	NA	NA	NA	0.1 U	NA	0.1 U	NA	NA
AROCLOR-1248	0.057 U	0.057 U	0.1 U	0.057 U	0.1 U	NA	0.057 U	0.11 U	NA	NA	NA	0.1 U	NA	0.1 U	NA	NA
AROCLOR-1254	0.057 U	0.057 U	0.1 U	0.057 U	0.1 U	NA	0.057 U	0.11 U	NA	NA	NA	0.1 U	NA	0.1 U	NA	NA
AROCLOR-1260	0.057 U	0.057 U	0.1 U	0.057 U	0.1 U	NA	0.057 U	0.11 U	NA	NA	NA	0.1 U	NA	0.1 U	NA	NA
AROCLOR-1268	0.057 U	0.057 U	0.1 U	0.057 U	0.1 U	NA	0.057 U	0.11 U	NA	NA	NA	0.1 U	NA	0.1 U	NA	NA
BETA-BHC	0.008 U	0.008 U	0.01 U	0.00816 U	0.01 U	NA	0.00808 U	0.01 U	NA	NA	NA	0.01 U	NA	0.01 U	NA	NA
DELTA-BHC	0.002 U	0.002 U	0.01 U	0.00204 U	0.01 U	NA	0.00202 U	0.01 U	NA	NA	NA	0.01 U	NA	0.01 UJ	NA	NA
DIELDRIN	0.003 U	0.003 U	0.02 U	0.00306 U	0.02 U	NA	0.00303 U	0.02 U	NA	NA	NA	0.02 U	NA	0.02 U	NA	NA
ENDOSULFAN I	0.001 U	0.001 U	0.01 U	0.00102 U	0.01 U	NA	0.00101 U	0.01 U	NA	NA	NA	0.01 U	NA	0.01 U	NA	NA
ENDOSULFAN II	0.007 U	0.007 U	0.02 U	0.00714 U	0.02 U	NA	0.00707 U	0.02 U	NA	NA	NA	0.02 U	NA	0.02 U	NA	NA
ENDOSULFAN SULFATE	0.003 U	0.003 UJ	0.02 U	0.00306 U	0.02 U	NA	0.00303 U	0.02 U	NA	NA	NA	0.02 U	NA	0.02 U	NA	NA
ENDRIN	0.003 U	0.003 U	0.02 U	0.00306 U	0.02 U	NA	0.00303 U	0.02 U	NA	NA	NA	0.02 U	NA	0.02 U	NA	NA
ENDRIN ALDEHYDE	0.004 UJ	0.004 UJ	0.02 U	0.00408 UJ	0.02 U	NA	0.00404 UJ	0.02 U	NA	NA	NA	0.02 U	NA	0.02 U	NA	NA
ENDRIN KETONE	0.003 U	0.003 U	0.02 U	0.00306 U	0.02 U	NA	0.00303 U	0.02 U	NA	NA	NA	0.02 U	NA	0.02 U	NA	NA
GAMMA-BHC (LINDANE)	0.002 U	0.002 U	0.01 U	0.00204 U	0.01 U	NA	0.00202 U	0.01 U	NA	NA	NA	0.01 U	NA	0.01 U	NA	NA
GAMMA-CHLORDANE	0.002 U	0.002 U	0.01 U	0.00204 U	0.01 U	NA	0.00202 U	0.01 U	NA	NA	NA	0.01 U	NA	0.01 U	NA	NA
HEPTACHLOR	0.001 UJ	0.001 UJ	0.01 U	0.00102 UJ	0.01 U	NA	0.00101 UJ	0.01 U	NA	NA	NA	0.01 U	NA	0.01 U	NA	NA
HEPTACHLOR EPOXIDE	0.002 U	0.002 U	0.01 U	0.00204 U	0.01 U	NA	0.00202 U	0.01 U	NA	NA	NA	0.01 U	NA	0.01 U	NA	NA
METHOXYCHLOR	0.016 U	0.016 U	0.1 U	0.0163 U	0.1 U	NA	0.0162 U	0.1 U	NA	NA	NA	0.1 U	NA	0.1 U	NA	NA
TOTAL AROCLOR	0.057 U	0.057 U	0.1 U	0.057 U	0.1 U	NA	0.057 U	0.11 U	NA	NA	NA	0.1 U	NA	0.1 U	NA	NA
TOTAL DDD/DDE/DDT	0.004 U	0.004 U	0.02 U	0.0041 U	0.02 U	NA	0.004 U	0.02 U	NA	NA	NA	0.02 U	NA	0.02 U	NA	NA
TOXAPHENE	0.043 U	0.043 U	0.2 U	0.0439 U	0.2 U	NA	0.0434 U	0.2 U	NA	NA	NA	0.2 U	NA	0.2 U	NA	NA
EXPLOSIVES (UG/L)																
1,2-PROPYLENE GLYCOL DINITRATE	NA	NA	NA	NA	NA	0.1 U	NA	NA	NA	NA	NA	NA	0.1 U	NA	0.1 U	NA

SHADED - DETECTED
U-NOT DETECTED; J-QUANTITATION APPROXIMATE; R-REJECTED; NA-NOT ANALYZED

SAMPLE ID	DA-A-MW01B-01-AVG	DA-A-MW02B-01	DA-MW02B-52708	DA-A-MW03B-01	DA-MW03B-52208	DA-MW-03B-062810-AVG	DA-A-MW04B-01	DA-MW04B-52308	DA-MW-04B-063010	DA-MW6A-062310	DA-MW6B-061710	DA-MW07A-52808	DA-MW7A-062210	DA-MW07B-52908	DA-MW7B-062310	DA-MW-08A-062910
LOCATION ID	DA-MW01B	DA-MW02B		DA-MW03B			DA-MW04B			DA-MW06A	DA-MW06B	DA-MW07A		DA-MW07B		DA-MW08A
SAMPLE DATE	09/04/03	09/03/03	05/27/08	09/05/03	05/22/08	06/28/10	09/04/03	05/23/08	06/30/10	06/23/10	06/17/10	05/28/08	06/22/10	05/29/08	06/23/10	06/29/10
SCREEN TOP DEPTH	10.0	7.0	7.0	4.0	4.0	4.0	15.0	15.0	15.0	0.0	25.0	0.0	0.0	18.0	18.0	0.0
SCREEN BOTTOM DEPTH	39.0	45.0	45.0	24.0	24.0	24.0	45.0	45.0	45.0	8.3	35.6	10.0	10.0	28.0	28.0	4.7
WELL DEPTH	40	45	45	24	24	24	45	45	45	8.3	35.6	10	10	28.72	28.72	4.67
SACODE	AVG	NORMAL	NORMAL	NORMAL	NORMAL	AVG	NORMAL	NORMAL	NORMAL	NORMAL	NORMAL	NORMAL	NORMAL	NORMAL	NORMAL	NORMAL
QC TYPE	NM	NM	NM	NM	NM	NM	NM	NM	NM	NM	NM	NM	NM	NM	NM	NM
METALS (UG/L)																
ALUMINUM	77	29 J	14.6 U	29 J	18.4 UJ	NA	21 J	140 J	NA	NA	NA	35.4 UJ	NA	1320	NA	NA
ANTIMONY	5.185 U	2 U	0.78 U	2 U	0.98 UJ	NA	2 U	0.78 U	NA	NA	NA	1.4 UJ	NA	2.8 UJ	NA	NA
ARSENIC	3.4 U	26.1	17.2	3.4 U	1.69 U	NA	3.4 U	2.5 J	NA	NA	NA	5.8 J	NA	34.4	NA	NA
BARIUM	10.95	30	25.9 J	9.1	6.2	NA	1.2 U	1.5 UJ	NA	NA	NA	80.8 J	NA	72.8 J	NA	NA
BERYLLIUM	0.6 U	0.60 U	0.13 U	0.60 U	0.13 U	NA	0.60 U	0.13 U	NA	NA	NA	0.13 U	NA	0.13 U	NA	NA
CADMIUM	9.05	0.40 U	0.38 UJ	0.40 U	0.04 U	NA	0.40 U	0.04 U	NA	NA	NA	0.1 UJ	NA	0.19 UJ	NA	NA
CALCIUM	25500	16000	12100	22000	26600	NA	41000	42700	NA	NA	NA	53900	NA	56000	NA	NA
CHROMIUM	2.45 U	2.4 U	2.4 J	0.80 U	0.41 U	NA	0.80 U	0.78 UJ	NA	NA	NA	1.2 UJ	NA	2.2 UJ	NA	NA
COBALT	1.26 U	9.6	15.6 J	1.8 U	0.31 UJ	NA	0.64 U	1.1 UJ	NA	NA	NA	14.5 J	NA	1.7 UJ	NA	NA
COPPER	1.4 J	1.8 U	1.7 UJ	1.8 U	0.75 UJ	NA	1.8 U	0.75 UJ	NA	NA	NA	0.75 U	NA	2.3 UJ	NA	NA
IRON	120	27000	26700	14 U	9.2 UJ	NA	14 U	1330	NA	NA	NA	12200	NA	44800	NA	NA
LEAD	4.14 J	4.8 U	1.4 J	4.8 U	0.97 UJ	NA	4.8 U	0.97 UJ	NA	NA	NA	1.7 J	NA	1.8 J	NA	NA
MAGNESIUM	6850	2600	1850	7800	7820	NA	11000	11500	NA	NA	NA	6090	NA	8900	NA	NA
MANGANESE	110	8400	8370	81	56	NA	1200	1210	NA	NA	NA	5280	NA	1200	NA	NA
MERCURY	0.25	0.012 U	0.03 U	0.012 U	0.03 U	NA	0.012 U	0.03 U	NA	NA	NA	0.03 U	NA	0.03 U	NA	NA
MOLYBDENUM	1.3 U	2.1 U	0.37 UJ	1.3 U	0.3 U	NA	1.3 J	0.84 UJ	NA	NA	NA	0.3 U	NA	2 J	NA	NA
NICKEL	1.8 U	1.82 J	1.8 UJ	1.8 U	0.42 U	NA	1.8 U	0.42 U	NA	NA	NA	2.1 UJ	NA	7.7 J	NA	NA
POTASSIUM	1550	2300	1170	2300	2370	NA	680 U	637 UJ	NA	NA	NA	14500	NA	1110	NA	NA
SELENIUM	1.905 J	2.5 U	0.96 U	2.5 U	0.96 U	NA	2.5 U	1.7 J	NA	NA	NA	0.96 U	NA	0.96 U	NA	NA
SILVER	1.015 U	1.15 U	0.29 U	0.84 U	0.29 U	NA	0.70 U	0.48 UJ	NA	NA	NA	0.55 J	NA	0.62 J	NA	NA
SODIUM	9800	6100	13100	15000	16100	NA	12000	11500	NA	NA	NA	64600	NA	37200	NA	NA
THALLIUM	3.5 U	3.5 U	1.64 U	3.5 U	1.64 U	NA	3.5 U	1.64 U	NA	NA	NA	1.64 U	NA	1.64 U	NA	NA
VANADIUM	1.1 U	0.80 U	0.38 U	0.80 U	0.49 UJ	NA	0.80 U	0.61 UJ	NA	NA	NA	0.38 U	NA	2 UJ	NA	NA
ZINC	3.25 J	8.1	9.3 UJ	3.3 J	4.7 UJ	NA	3.3 J	5.9 UJ	NA	NA	NA	8.5 UJ	NA	17.2 J	NA	NA
DISSOLVED METALS (UG/L)																
ALUMINUM	15.25 J	24 J	14.6 U	17 U	15.8 UJ	NA	20 J	19.4 UJ	NA	NA	NA	19.4 UJ	NA	14.6 U	NA	NA
ANTIMONY	2.815 U	2 U	0.78 U	2 U	0.78 U	NA	2 U	1.4 UJ	NA	NA	NA	0.78 U	NA	1.3 UJ	NA	NA
ARSENIC	3.4 U	7.87 U	16.4	3.4 U	1.69 U	NA	3.4 U	1.69 U	NA	NA	NA	4.3 J	NA	24.7	NA	NA
BARIUM	395 J	23	25.6	9 J	6.7	NA	1 U	0.59 U	NA	NA	NA	76	NA	45.2	NA	NA
BERYLLIUM	0.6 U	0.60 U	0.13 U	0.60 U	0.13 U	NA	0.60 U	0.13 U	NA	NA	NA	0.13 U	NA	0.13 U	NA	NA
CADMIUM	8.5	0.40 U	0.37 UJ	0.40 U	0.04 U	NA	0.40 U	0.04 U	NA	NA	NA	0.05 UJ	NA	0.04 U	NA	NA
CALCIUM	29000	15000	12200	22000	27400	NA	42000	42600	NA	NA	NA	52100	NA	54500	NA	NA
CHROMIUM	1.35 U	2 U	2.3 UJ	0.80 U	0.41 U	NA	0.80 U	0.8 UJ	NA	NA	NA	1.1 UJ	NA	0.46 UJ	NA	NA
COBALT	1.23 U	8.6	15.6 J	1.5 U	0.28 UJ	NA	0.72 U	0.48 UJ	NA	NA	NA	12.3 J	NA	0.51 UJ	NA	NA
COPPER	1.6 J	1.8 U	1.8 UJ	1.8 U	0.75 UJ	NA	1.8 U	0.75 UJ	NA	NA	NA	0.75 U	NA	0.75 U	NA	NA
IRON	14 U	14000	26600	14 U	9 U	NA	14 U	23 UJ	NA	NA	NA	10600	NA	748	NA	NA
LEAD	4.8 U	4.8 U	1.8 J	4.8 U	0.97 UJ	NA	4.8 U	0.97 UJ	NA	NA	NA	2.2 J	NA	0.97 U	NA	NA

SHADED - DETECTED
U-NOT DETECTED; J-QUANTITATION APPROXIMATE; R-REJECTED; NA-NOT ANALYZED

SAMPLE ID	DA-A-MW01B-01-AVG	DA-A-MW02B-01	DA-MW02B-52708	DA-A-MW03B-01	DA-MW03B-52208	DA-MW-03B-062810-AVG	DA-A-MW04B-01	DA-MW04B-52308	DA-MW-04B-063010	DA-MW6A-062310	DA-MW6B-061710	DA-MW07A-52808	DA-MW7A-062210	DA-MW07B-52908	DA-MW7B-062310	DA-MW-08A-062910
LOCATION ID	DA-MW01B	DA-MW02B		DA-MW03B			DA-MW04B			DA-MW06A	DA-MW06B	DA-MW07A		DA-MW07B		DA-MW08A
SAMPLE DATE	09/04/03	09/03/03	05/27/08	09/05/03	05/22/08	06/28/10	09/04/03	05/23/08	06/30/10	06/23/10	06/17/10	05/28/08	06/22/10	05/29/08	06/23/10	06/29/10
SCREEN TOP DEPTH	10.0	7.0	7.0	4.0	4.0	4.0	15.0	15.0	15.0	0.0	25.0	0.0	0.0	18.0	18.0	0.0
SCREEN BOTTOM DEPTH	39.0	45.0	45.0	24.0	24.0	24.0	45.0	45.0	45.0	8.3	35.6	10.0	10.0	28.0	28.0	4.7
WELL DEPTH	40	45	45	24	24	24	45	45	45	8.3	35.6	10	10	28.72	28.72	4.67
SACODE	AVG	NORMAL	NORMAL	NORMAL	NORMAL	AVG	NORMAL	NORMAL	NORMAL	NORMAL	NORMAL	NORMAL	NORMAL	NORMAL	NORMAL	NORMAL
QC TYPE	NM	NM	NM	NM	NM	NM	NM	NM	NM	NM	NM	NM	NM	NM	NM	NM
MAGNESIUM	7900	2400	1870	7700	8020	NA	12000	11500	NA	NA	NA	6120	NA	8500	NA	NA
MANGANESE	155	8100	8220	78	56.2	NA	1200	1090	NA	NA	NA	5400	NA	957	NA	NA
MERCURY	0.17	0.012 U	0.03 U	0.012 U	0.03 U	NA	0.012 U	0.03 U	NA	NA	NA	0.03 U	NA	0.03 U	NA	NA
MOLYBDENUM	1.3 U	1.3 U	0.43 UJ	1.3 U	0.3 U	NA	1.3 U	0.83 UJ	NA	NA	NA	0.3 U	NA	1.1 UJ	NA	NA
NICKEL	1.415 J	1.8 U	2.1 UJ	1.8 U	0.42 U	NA	1.8 U	0.42 U	NA	NA	NA	1.8 UJ	NA	0.45 UJ	NA	NA
POTASSIUM	1500	2200	1110	2300	2460	NA	960 U	618 UJ	NA	NA	NA	13400	NA	1020	NA	NA
SELENIUM	2.5 U	2.5 U	0.96 U	2.5 U	0.96 U	NA	2.5 U	0.96 U	NA	NA	NA	0.96 U	NA	0.96 U	NA	NA
SILVER	0.7 U	1.42 U	0.61 J	0.70 U	0.29 U	NA	0.70 U	0.54 UJ	NA	NA	NA	0.42 J	NA	0.29 U	NA	NA
SODIUM	13500 J	5900	13100	15000 J	16700	NA	13000 J	11500	NA	NA	NA	60400	NA	38000	NA	NA
THALLIUM	3.5 U	3.5 U	1.64 U	3.5 U	1.64 U	NA	3.5 U	1.64 U	NA	NA	NA	1.64 U	NA	1.64 U	NA	NA
VANADIUM	0.8 U	0.80 U	0.38 U	0.80 U	0.66 UJ	NA	0.80 U	0.38 U	NA	NA	NA	0.38 U	NA	0.38 U	NA	NA
ZINC	146.5 J	7	12.3 J	2.2 U	5.9 UJ	NA	3.3 J	5 UJ	NA	NA	NA	8.1 UJ	NA	5.3 UJ	NA	NA
MISCELLANEOUS PARAMETERS (MG/L)																
AMMONIA-N	NA	NA	3	NA	0.1 U	0.05 U	NA	0.1 U	NA	NA	NA	2.1	2.4	0.1 U	0.05 U	NA
CHLORIDE	NA	NA	NA	NA	NA	NA	NA	NA	NA	NA	NA	NA	NA	NA	NA	NA
NITRATE-N	NA	NA	0.05 U	NA	1.1	0.695	NA	0.05 U	NA	NA	NA	0.05 U	0.025 U	0.05 U	0.02 J	NA
NITRITE-N	NA	NA	0.05 U	NA	0.05 U	0.025 U	NA	0.05 U	NA	NA	NA	0.05 U	0.025 U	0.05 U	0.025 U	NA
ORTHOPHOSPHATE-P	NA	NA	0.055	NA	0.07	0.05 U	NA	0.016 J	NA	NA	NA	0.019 J	0.05 U	0.079	0.05 U	NA
SULFATE	NA	NA	6.5	NA	25	21	NA	30	NA	NA	NA	9.5	9	11	5.4	NA
SULFIDE	NA	NA	1 U	NA	1 U	1.45	NA	1 U	NA	NA	NA	1 U	1	1 U	0.8 U	NA
TOTAL ORGANIC CARBON	NA	NA	5	NA	1.3	1.7	NA	0.41 J	NA	NA	NA	5.8	10	1.3	1.8	NA
MISCELLANEOUS PARAMETERS (UG/L)																
CYANIDE	NA	NA	NA	NA	NA	NA	NA	NA	NA	NA	NA	NA	5 U	NA	5 U	NA
METHANE	NA	NA	260	NA	10 U	NA	NA	8.8 J	NA	NA	NA	3.2 J	NA	22	NA	NA
FIELD (UG/L)																
FERROUS IRON	NA	NA	22000	NA	0 U	NA	NA	0 U	NA	NA	NA	6800	NA	1060	NA	NA
PETROLEUM HYDROCARBONS (UG/L)																
EXTRACTABLE TPH (C09-C36)	NA	NA	190	NA	79 U	NA	NA	85 U	NA	NA	NA	570	NA	200	NA	NA
GASOLINE RANGE ORGANICS	NA	NA	74	NA	47 U	NA	NA	10 U	NA	NA	NA	140	NA	510	NA	NA

SHADED - DETECTED
U-NOT DETECTED; J-QUANTITATION APPROXIMATE; R-REJECTED; NA-NOT ANALYZED

SAMPLE ID	DA-MW8B-062210	DA-MW09B-52808	DA-MW-09B-062910	DA-MW-11-062910-AVG	DA-MW-12-063010	DA-GW-MW13A-080408-AVG	DA-MW-13B-063010	DA-MW100B-51308	DA-MW-100B-091908	DA-MW101B-53008-AVG	DA-GW-MW101B-073108	DA-MW101B-062310	DA-MW102B-52708	DA-GW-MW102B-080408
LOCATION ID	DA-MW08B	DA-MW09B		DA-MW11	DA-MW12	DA-MW13A	DA-MW13B	DA-MW100B		DA-MW101B			DA-MW102B	
SAMPLE DATE	06/22/10	05/28/08	06/29/10	06/29/10	06/30/10	08/04/08	06/30/10	05/13/08	09/18/08	05/30/08	07/31/08	06/23/10	05/27/08	08/01/08
SCREEN TOP DEPTH	6.5	10.0	10.0	4.0	0.0	0.0	13.0	15.0	15.0	10.0	10.0	10.0	14.0	14.0
SCREEN BOTTOM DEPTH	16.8	21.4	21.4	9.0	4.0	6.0	23.9	45.0	45.0	50.0	50.0	50.0	44.0	44.0
WELL DEPTH	16.09	21.41	21.41	4.6	4	6	24.73	45	45	50	50	50	44	44
SACODE	NORMAL	NORMAL	NORMAL	AVG	NORMAL	AVG	NORMAL	NORMAL	NORMAL	AVG	NORMAL	NORMAL	NORMAL	NORMAL
QC TYPE	NM	NM	NM	NM	NM	NM	NM	NM	NM	NM	NM	NM	NM	NM
VOLATILES (UG/L)														
1,1,1,2-TETRACHLOROETHANE	0.5 U	1 U	0.5 U	0.5 U	0.5 U	1 U	0.5 U	50 U	NA	1 U	1 U	0.5 U	1 U	1 U
1,1,1-TRICHLOROETHANE	0.5 U	76	41	0.5 U	0.5 U	1 U	0.5 U	50 U	NA	110	88	96	1 U	1 U
1,1,2,2-TETRACHLOROETHANE	0.5 U	1 U	0.5 U	0.5 U	0.5 U	1 U	0.5 U	50 U	NA	1 U	1 U	0.5 U	1 U	1 U
1,1,2-TRICHLOROETHANE	0.5 U	1 U	0.5 U	0.5 U	0.5 U	1 U	0.5 U	50 U	NA	1 U	1 U	0.5 U	1 U	1 U
1,1-DICHLOROETHANE	0.5 U	47	82 J	0.5 U	0.5 U	1 U	0.5 U	310	NA	805	740	510	1	2
1,1-DICHLOROETHENE	0.5 U	14	18	0.5 U	0.5 U	1 U	0.5 U	50 U	NA	79	78	52 J	1 U	1 U
1,1-DICHLOROPROPENE	0.5 U	1 U	0.5 U	0.5 U	0.5 U	1 U	0.5 U	50 U	NA	1 U	1 U	0.5 U	1 U	1 U
1,2,3-TRICHLOROBENZENE	0.5 UJ	1 U	0.5 U	0.5 U	0.5 U	1 U	0.5 U	50 U	NA	1 U	1 U	0.5 U	1 U	1 U
1,2,3-TRICHLOROPROPANE	0.5 U	1 U	0.5 U	0.5 U	0.5 U	1 U	0.5 U	50 U	NA	1 U	1 U	0.5 UJ	1 U	1 U
1,2,4-TRICHLOROBENZENE	0.5 U	1 U	0.5 U	0.5 U	0.5 U	1 U	0.5 U	50 U	9 U	1 U	1 U	0.5 U	1 U	1 U
1,2,4-TRIMETHYLBENZENE	0.5 U	1 U	0.5 UJ	0.5 U	0.5 U	1 U	0.5 U	810	NA	1 U	1 U	0.5 U	1 U	1 U
1,2-DIBROMO-3-CHLOROPROPANE	0.75 UJ	1 U	0.75 U	0.75 U	0.75 U	1 UJ	0.75 U	50 U	NA	1 U	1 U	0.75 U	1 U	1 UJ
1,2-DIBROMOETHANE	0.5 U	1 U	0.5 U	0.5 U	0.5 U	1 U	0.5 U	50 U	NA	1 U	1 U	0.5 UJ	1 U	1 U
1,2-DICHLOROBENZENE	0.5 U	1 U	0.5 U	0.5 U	0.5 U	1 U	0.5 U	50 U	9 U	1 U	1 U	0.5 U	1 U	1 U
1,2-DICHLOROETHANE	0.5 U	1 U	0.5 U	0.5 U	0.5 U	1 U	0.5 U	50 U	NA	1 U	1 U	0.5 U	1 U	1 U
1,2-DICHLOROPROPANE	0.5 U	1 U	0.5 U	0.5 U	0.5 U	1 U	0.5 U	50 U	NA	1 U	1 U	0.5 U	1 U	1 U
1,3,5-TRIMETHYLBENZENE	0.5 U	1 U	0.5 UJ	0.5 U	0.5 U	1 U	0.5 U	290	NA	1 U	1 U	0.5 U	1 U	1 U
1,3-DICHLOROBENZENE	0.5 U	1 U	0.5 U	0.5 U	0.5 U	1 U	0.5 U	50 U	9 U	1 U	1 U	0.5 U	1 U	1 U
1,3-DICHLOROPROPANE	0.5 U	1 U	0.5 U	0.5 U	0.5 U	1 U	0.5 U	50 U	NA	1 U	1 U	0.5 U	1 U	1 U
1,4-DICHLOROBENZENE	0.5 U	1 U	0.5 U	0.5 U	0.5 U	1 U	0.5 U	50 U	9 U	1 U	1 U	0.5 U	1 U	1 U
2,2-DICHLOROPROPANE	0.5 U	1 U	0.5 U	0.5 U	0.5 U	1 UJ	0.5 U	50 U	NA	1 U	1 U	0.5 U	1 U	1 UJ
2-BUTANONE	2.5 UJ	5 U	12 U	2.5 U	2.5 U	5 UJ	2.5 U	250 U	NA	5 U	5 U	2.5 U	5 U	5 UJ
2-CHLOROTOLUENE	0.5 U	1 U	0.5 U	0.5 U	0.5 U	1 U	0.5 U	50 U	NA	1 U	1 U	0.5 U	1 U	1 U
2-HEXANONE	2.5 UJ	5 U	2.5 U	2.5 U	2.5 U	5 U	2.5 U	250 U	NA	5 U	5 U	2.5 U	5 U	5 U
4-CHLOROTOLUENE	0.5 U	1 U	0.5 U	0.5 U	0.5 U	1 U	0.5 U	50 U	NA	1 U	1 U	0.5 U	1 U	1 U
4-ISOPROPYLTOLUENE	0.5 U	1 U	0.5 UJ	0.5 U	0.5 U	1 U	0.5 U	110	NA	1 U	1 U	0.5 U	1 U	1 U
4-METHYL-2-PENTANONE	2.5 UJ	5 U	2.5 U	2.5 U	2.5 U	5 U	2.5 U	250 U	NA	5 U	5 U	2.5 UJ	5 U	5 U
ACETONE	2.5 UJ	14	27 U	2.5 UJ	2.5 UJ	5 UJ	2.5 UJ	250 U	NA	5 U	5 U	2.5 U	3 J	7 UJ
BENZENE	0.5 U	1 U	0.5 U	0.5 U	0.5 U	1 U	0.5 U	50 U	NA	1 U	1 U	0.5 U	1 U	1 U
BROMOBENZENE	0.5 U	1 U	0.5 U	0.5 U	0.5 U	1 U	0.5 U	50 U	NA	1 U	1 U	0.5 U	1 U	1 U
BROMOCHLOROMETHANE	0.5 U	1 U	0.5 U	0.5 U	0.5 U	1 U	0.5 U	50 U	NA	1 U	1 U	0.5 U	1 U	1 U
BROMODICHLOROMETHANE	0.5 U	1 U	0.5 U	0.5 U	0.5 U	1 U	0.5 U	50 U	NA	1 U	1 U	0.5 U	1 U	1 U
BROMOFORM	0.5 U	1 U	0.5 UJ	0.5 U	0.5 U	1 U	0.5 U	50 U	NA	1 U	1 U	0.5 U	1 U	1 U

SAMPLE ID	DA-MW8B-062210	DA-MW09B-52808	DA-MW-09B-062910	DA-MW-11-062910-AVG	DA-MW-12-063010	DA-GW-MW13A-080408-AVG	DA-MW-13B-063010	DA-MW100B-51308	DA-MW-100B-091908	DA-MW101B-53008-AVG	DA-GW-MW101B-073108	DA-MW101B-062310	DA-MW102B-52708	DA-GW-MW102B-080408
LOCATION ID	DA-MW08B	DA-MW09B		DA-MW11	DA-MW12	DA-MW13A	DA-MW13B	DA-MW100B		DA-MW101B			DA-MW102B	
SAMPLE DATE	06/22/10	05/28/08	06/29/10	06/29/10	06/30/10	08/04/08	06/30/10	05/13/08	09/18/08	05/30/08	07/31/08	06/23/10	05/27/08	08/01/08
SCREEN TOP DEPTH	6.5	10.0	10.0	4.0	0.0	0.0	13.0	15.0	15.0	10.0	10.0	10.0	14.0	14.0
SCREEN BOTTOM DEPTH	16.8	21.4	21.4	9.0	4.0	6.0	23.9	45.0	45.0	50.0	50.0	50.0	44.0	44.0
WELL DEPTH	16.09	21.41	21.41	4.6	4	6	24.73	45	45	50	50	50	44	44
SACODE	NORMAL	NORMAL	NORMAL	AVG	NORMAL	AVG	NORMAL	NORMAL	NORMAL	AVG	NORMAL	NORMAL	NORMAL	NORMAL
QC TYPE	NM	NM	NM	NM	NM	NM	NM	NM	NM	NM	NM	NM	NM	NM
BROMOMETHANE	1 U	2 U	1 U	1 U	1 U	2 U	1 U	100 U	NA	2 U	2 U	1 U	2 U	2 U
BTEX	0.562 U	1.1 U	0.562 UJ	0.562 U	0.562 U	1.1 U	0.562 U	155 J	NA	1.1 U	1.1 U	0.562 U	1.1 U	1.1 U
CARBON DISULFIDE	0.5 U	1 U	0.5 U	0.5 U	0.5 U	1 U	0.5 U	50 U	NA	1 U	1 U	0.5 U	1 U	1 U
CARBON TETRACHLORIDE	0.5 U	1 U	0.5 U	0.5 U	0.5 U	1 U	0.5 U	50 U	NA	1 U	1 U	0.5 U	1 U	1 U
CHLOROBENZENE	0.5 U	1 U	0.5 U	0.5 U	0.5 U	1 U	0.5 U	50 U	NA	1 U	1 U	0.5 U	1 U	1 U
CHLORODIBROMOMETHANE	0.5 U	1 U	0.5 U	0.5 U	0.5 U	1 U	0.5 U	50 U	NA	1 U	1 U	0.5 U	1 U	1 U
CHLOROETHANE	1 U	0.4 J	24	1 U	1 U	2 U	1 U	130	NA	270	240	94	2 U	2 U
CHLOROFORM	0.5 U	1 U	0.5 U	0.5 U	0.5 U	1 U	0.5 U	50 U	NA	1 U	1 U	0.5 U	1 U	1 U
CHLOROMETHANE	1 U	2 U	1 U	1 U	1 U	2 UJ	1 U	100 U	NA	2 U	4	1 U	2 U	2 UJ
CIS-1,2-DICHLOROETHENE	0.5 U	1 U	0.5 U	0.5 U	0.23 J	1 U	0.51 J	50 U	NA	0.4 J	0.4 J	0.37 J	2	3
CIS-1,3-DICHLOROPROPENE	0.5 U	1 U	0.5 UJ	0.5 U	0.5 U	1 U	0.5 U	50 U	NA	1 U	1 U	0.5 U	1 U	1 U
DIBROMOMETHANE	0.5 U	1 U	0.5 U	0.5 U	0.5 U	1 U	0.5 U	50 U	NA	1 U	1 U	0.5 U	1 U	1 U
DICHLORODIFLUOROMETHANE	1 U	2 U	1 U	1 U	1 U	2 U	1 U	100 U	NA	2 U	2 U	1 U	2 U	2 U
ETHYLBENZENE	0.5 U	1 U	0.5 U	0.5 U	0.5 U	1 U	0.5 U	58	NA	1 U	1 U	0.5 U	1 U	1 U
HEXACHLOROBUTADIENE	0.5 U	1 UJ	0.5 U	0.5 U	0.5 U	1 U	0.5 U	50 U	9 U	1 UJ	1 U	0.5 U	1 UJ	1 U
ISOPROPYLBENZENE	0.5 U	1 U	0.5 U	0.5 U	0.5 U	1 U	0.5 U	94	NA	1 U	1 U	0.5 U	1 U	1 U
M+P-XYLENES	1 U	2 U	1 UJ	1 U	1 U	2 U	1 U	60 J	NA	2 U	2 U	1 U	2 U	2 U
METHYL TERT-BUTYL ETHER	0.5 U	1 U	0.5 U	0.5 U	0.5 U	1 U	0.5 U	50 U	NA	1 U	1 U	0.5 U	1 U	1 U
METHYLENE CHLORIDE	2.5 U	5 U	2.5 U	2.5 U	2.5 U	5 U	2.5 U	250 U	NA	5 U	5 U	2.5 U	5 U	5 U
N-BUTYLBENZENE	0.5 U	1 U	0.5 U	0.5 U	0.5 U	1 U	0.5 U	98	NA	1 U	1 U	0.5 U	1 U	1 U
N-PROPYLBENZENE	0.5 U	1 U	0.5 U	0.5 U	0.5 U	1 U	0.5 U	140	NA	1 U	1 U	0.5 U	1 U	1 U
O-XYLENE	0.5 U	1 U	0.5 UJ	0.5 U	0.5 U	1 U	0.5 U	37 J	NA	1 U	1 U	0.5 U	1 U	1 U
SEC-BUTYLBENZENE	0.5 U	1 U	0.5 U	0.5 U	0.5 U	1 U	0.5 U	84	NA	1 U	1 U	0.5 U	1 U	1 U
STYRENE	0.5 U	1 U	0.5 UJ	0.5 U	0.5 U	1 U	0.5 U	50 U	NA	1 U	1 U	0.5 U	1 U	1 U
TERT-BUTYLBENZENE	0.5 U	1 U	0.5 U	0.5 U	0.5 U	1 U	0.5 U	50 U	NA	1 U	1 U	0.5 U	1 U	1 U
TETRACHLOROETHENE	0.5 U	1 U	0.5 U	0.5 U	4.5	1 UJ	1.1	50 U	NA	1 U	1 U	0.5 U	1 U	1 UJ
TOLUENE	0.5 U	1 U	0.5 U	0.5 U	0.5 U	1 U	0.5 U	50 U	NA	1 U	1 U	0.5 U	1 U	1 U
TOTAL 1,2-DICHLOROETHENE	0.5 U	1 U	0.5 U	0.5 U	0.23 J	1 U	0.51 J	50 U	NA	0.4 J	0.4 J	0.37 J	2	3
TOTAL CHLORINATED ETHENES	0.6 U	0.5 J	19.6 J	0.6 U	5.83 J	0.4 J	1.98 J	62 U	NA	4.4 J	11.4 J	57.5 J	7	14.4 J
TOTAL CHLORINATED VOCS	0.602 UJ	137.9 J	167 J	0.602 U	5.83 J	0.4 J	1.98 J	440	9 U	1268.4 J	1161.4 J	757 J	8 J	16.4 J
TOTAL XYLENES	0.75 U	1.5 U	0.75 UJ	0.75 U	0.75 U	1.5 U	0.75 U	97 J	NA	1.5 U	1.5 U	0.75 U	1.5 U	1.5 U
TRANS-1,2-DICHLOROETHENE	0.5 U	1 U	0.5 U	0.5 U	0.5 U	1 U	0.5 U	50 U	NA	1 U	1 U	0.5 U	1 U	1 U
TRANS-1,3-DICHLOROPROPENE	0.5 U	1 U	0.5 UJ	0.5 U	0.5 U	1 U	0.5 U	50 U	NA	1 U	1 U	0.5 U	1 U	1 U
TRICHLOROETHENE	0.5 U	0.5 J	1.2	0.5 U	1.1	0.40 J	0.37 J	50 U	NA	4	5	3.5	5	11
TRICHLOROFLUOROMETHANE	1 U	2 U	1 U	1 U	1 U	2 U	1 U	100 U	NA	2 U	2 U	1 U	2 U	2 U
VINYL CHLORIDE	1 U	2 U	0.37 J	1 U	1 U	2 U	1 U	100 U	NA	2 U	6	1.6 J	2 U	0.4 J

SHADED - DETECTED
U-NOT DETECTED; J-QUANTITATION APPROXIMATE; R-REJECTED; NA-NOT ANALYZED

SAMPLE ID	DA-MW8B-062210	DA-MW09B-52808	DA-MW-09B-062910	DA-MW-11-062910-AVG	DA-MW-12-063010	DA-GW-MW13A-080408-AVG	DA-MW-13B-063010	DA-MW100B-51308	DA-MW-100B-091908	DA-MW101B-53008-AVG	DA-GW-MW101B-073108	DA-MW101B-062310	DA-MW102B-52708	DA-GW-MW102B-080408
LOCATION ID	DA-MW08B	DA-MW09B		DA-MW11	DA-MW12	DA-MW13A	DA-MW13B	DA-MW100B		DA-MW101B			DA-MW102B	
SAMPLE DATE	06/22/10	05/28/08	06/29/10	06/29/10	06/30/10	08/04/08	06/30/10	05/13/08	09/18/08	05/30/08	07/31/08	06/23/10	05/27/08	08/01/08
SCREEN TOP DEPTH	6.5	10.0	10.0	4.0	0.0	0.0	13.0	15.0	15.0	10.0	10.0	10.0	14.0	14.0
SCREEN BOTTOM DEPTH	16.8	21.4	21.4	9.0	4.0	6.0	23.9	45.0	45.0	50.0	50.0	50.0	44.0	44.0
WELL DEPTH	16.09	21.41	21.41	4.6	4	6	24.73	45	45	50	50	50	44	44
SACODE	NORMAL	NORMAL	NORMAL	AVG	NORMAL	AVG	NORMAL	NORMAL	NORMAL	AVG	NORMAL	NORMAL	NORMAL	NORMAL
QC TYPE	NM	NM	NM	NM	NM	NM	NM	NM	NM	NM	NM	NM	NM	NM
VOLATILE GASES (UG/L)														
ETHANE	NA	10 U	3.5 J	2 U	2 U	NA	NA	NA	NA	10 U	NA	2 U	10 U	NA
ETHENE	NA	10 U	2 U	2 U	2 U	NA	NA	NA	NA	10 U	NA	2 U	10 U	NA
METHANE	NA	NA	6000 J	83.5 J	5.9 J	NA	NA	NA	NA	NA	NA	400 J	NA	NA
SEMIVOLATILES (UG/L)														
1,1-BIPHENYL	NA	10 U	NA	NA	NA	9 U	NA	NA	9 U	10 UJ	10 U	NA	10 U	9 U
1,2-DIPHENYLHYDRAZINE	NA	20 U	NA	NA	NA	19 U	NA	NA	19 U	20 U	20 U	NA	21 U	19 U
1,4-DIOXANE	NA	NA	8.3	0.475 U	0.48 U	NA	0.48 U	NA	NA	NA	NA	4	NA	NA
2,2'-OXYBIS(1-CHLOROPROPANE)	NA	10 U	NA	NA	NA	9 U	NA	NA	9 U	10 U	10 U	NA	10 U	9 U
2,4,5-TRICHLOROPHENOL	NA	25 UJ	NA	NA	NA	24 U	NA	NA	24 U	25.5 U	25 U	NA	26 UJ	24 U
2,4,6-TRICHLOROPHENOL	NA	10 UJ	NA	NA	NA	9 U	NA	NA	9 U	10 UJ	10 U	NA	10 UJ	9 U
2,4-DICHLOROPHENOL	NA	10 UJ	NA	NA	NA	9 U	NA	NA	9 U	10 U	10 U	NA	10 UJ	9 U
2,4-DIMETHYLPHENOL	NA	10 UJ	NA	NA	NA	9 U	NA	NA	9 U	10 U	10 U	NA	10 UJ	9 U
2,4-DINITROPHENOL	NA	25 UJ	NA	NA	NA	24 U	NA	NA	24 U	25.5 UJ	25 U	NA	26 UJ	24 U
2,4-DINITROTOLUENE	NA	10 U	NA	NA	NA	9 U	NA	NA	9 U	10 U	10 U	NA	10 U	9 U
2,6-DICHLOROPHENOL	NA	10 UJ	NA	NA	NA	9 U	NA	NA	9 U	10 U	10 U	NA	10 UJ	9 U
2,6-DINITROTOLUENE	NA	10 U	NA	NA	NA	9 U	NA	NA	9 U	10 U	10 U	NA	10 U	9 U
2-CHLORONAPHTHALENE	NA	10 U	NA	NA	NA	9 U	NA	NA	9 U	10 U	10 U	NA	10 U	9 U
2-CHLOROPHENOL	NA	10 UJ	NA	NA	NA	9 U	NA	NA	9 U	10 U	10 U	NA	10 UJ	9 U
2-METHYLNAPHTHALENE	NA	10 U	NA	NA	NA	9 U	NA	NA	9 U	10 U	10 U	NA	10 U	9 U
2-METHYLPHENOL	NA	10 UJ	NA	NA	NA	9 U	NA	NA	9 U	10 U	10 U	NA	10 UJ	9 U
2-NITROANILINE	NA	25 U	NA	NA	NA	24 U	NA	NA	24 U	25.5 U	25 U	NA	26 U	24 U
2-NITROPHENOL	NA	10 UJ	NA	NA	NA	9 U	NA	NA	9 U	10 U	10 U	NA	10 UJ	9 U
3&4-METHYLPHENOL	NA	10 UJ	NA	NA	NA	9 U	NA	NA	9 U	10 U	10 U	NA	10 UJ	9 U
3,3'-DICHLOROBENZIDINE	NA	10 UJ	NA	NA	NA	9 UJ	NA	NA	9 U	10 UJ	10 UJ	NA	10 UJ	9 UJ
3-NITROANILINE	NA	25 UJ	NA	NA	NA	24 UJ	NA	NA	24 U	25.5 UJ	25 UJ	NA	26 UJ	24 UJ
4,6-DINITRO-2-METHYLPHENOL	NA	25 UJ	NA	NA	NA	24 U	NA	NA	24 U	25.5 U	25 U	NA	26 UJ	24 U
4-BROMOPHENYL PHENYL ETHER	NA	10 U	NA	NA	NA	9 U	NA	NA	9 U	10 U	10 U	NA	10 U	9 U
4-CHLORO-3-METHYLPHENOL	NA	25 UJ	NA	NA	NA	9 U	NA	NA	9 U	25.5 U	10 U	NA	26 UJ	9 U
4-CHLOROANILINE	NA	10 U	NA	NA	NA	9 U	NA	NA	9 U	10 U	10 U	NA	10 U	9 U
4-CHLOROPHENYL PHENYL ETHER	NA	10 U	NA	NA	NA	9 U	NA	NA	9 U	10 U	10 U	NA	10 U	9 U
4-NITROANILINE	NA	25 UJ	NA	NA	NA	24 UJ	NA	NA	24 U	25.5 UJ	25 UJ	NA	26 UJ	24 UJ
4-NITROPHENOL	NA	25 UJ	NA	NA	NA	24 U	NA	NA	24 UJ	25.5 UJ	25 U	NA	26 UJ	24 U
ACENAPHTHENE	NA	10 U	NA	NA	NA	9 U	NA	NA	9 U	10 U	10 U	NA	10 U	9 U
ACENAPHTHYLENE	NA	10 U	NA	NA	NA	9 U	NA	NA	9 U	10 U	10 U	NA	10 U	9 U
ANTHRACENE	NA	10 U	NA	NA	NA	9 U	NA	NA	9 U	10 U	10 U	NA	10 U	9 U
BENZIDINE	NA	50 UR	NA	NA	NA	47 UJ	NA	NA	47 UR	50.5 UR	50 UR	NA	53 UR	47 UJ

SHADED - DETECTED
U-NOT DETECTED; J-QUANTITATION APPROXIMATE; R-REJECTED; NA-NOT ANALYZED

SAMPLE ID	DA-MW8B-062210	DA-MW09B-52808	DA-MW-09B-062910	DA-MW-11-062910-AVG	DA-MW-12-063010	DA-GW-MW13A-080408-AVG	DA-MW-13B-063010	DA-MW100B-51308	DA-MW-100B-091908	DA-MW101B-53008-AVG	DA-GW-MW101B-073108	DA-MW101B-062310	DA-MW102B-52708	DA-GW-MW102B-080408
LOCATION ID	DA-MW08B	DA-MW09B		DA-MW11	DA-MW12	DA-MW13A	DA-MW13B	DA-MW100B		DA-MW101B			DA-MW102B	
SAMPLE DATE	06/22/10	05/28/08	06/29/10	06/29/10	06/30/10	08/04/08	06/30/10	05/13/08	09/18/08	05/30/08	07/31/08	06/23/10	05/27/08	08/01/08
SCREEN TOP DEPTH	6.5	10.0	10.0	4.0	0.0	0.0	13.0	15.0	15.0	10.0	10.0	10.0	14.0	14.0
SCREEN BOTTOM DEPTH	16.8	21.4	21.4	9.0	4.0	6.0	23.9	45.0	45.0	50.0	50.0	50.0	44.0	44.0
WELL DEPTH	16.09	21.41	21.41	4.6	4	6	24.73	45	45	50	50	50	44	44
SACODE	NORMAL	NORMAL	NORMAL	AVG	NORMAL	AVG	NORMAL	NORMAL	NORMAL	AVG	NORMAL	NORMAL	NORMAL	NORMAL
QC TYPE	NM	NM	NM	NM	NM	NM	NM	NM	NM	NM	NM	NM	NM	NM
BENZO(A)ANTHRACENE	NA	10 U	NA	NA	NA	9 U	NA	NA	9 U	10 U	10 U	NA	10 U	9 U
BENZO(A)PYRENE	NA	10 U	NA	NA	NA	9 U	NA	NA	9 U	10 U	10 U	NA	10 U	9 U
BENZO(B)FLUORANTHENE	NA	10 U	NA	NA	NA	9 U	NA	NA	9 U	10 U	10 U	NA	10 U	9 U
BENZO(G,H,I)PERYLENE	NA	10 U	NA	NA	NA	9 U	NA	NA	9 U	10 U	10 U	NA	10 U	9 U
BENZO(K)FLUORANTHENE	NA	10 U	NA	NA	NA	9 U	NA	NA	9 U	10 U	10 U	NA	10 U	9 U
BENZOIC ACID	NA	25 UR	NA	NA	NA	24 UR	NA	NA	24 UR	25.5 UR	25 UR	NA	26 UR	24 UR
BENZYL ALCOHOL	NA	20 U	NA	NA	NA	19 U	NA	NA	19 U	20 U	20 U	NA	21 U	19 U
BIS(2-CHLOROETHOXY)METHANE	NA	10 U	NA	NA	NA	9 U	NA	NA	9 U	10 U	10 U	NA	10 U	9 U
BIS(2-CHLOROETHYL)ETHER	NA	10 U	NA	NA	NA	9 U	NA	NA	9 U	10 U	10 U	NA	10 U	9 U
BIS(2-ETHYLHEXYL)PHTHALATE	NA	10 U	NA	NA	NA	9 U	NA	NA	9 U	10 U	10 U	NA	10 U	9 U
BUTYL BENZYL PHTHALATE	NA	10 U	NA	NA	NA	9 U	NA	NA	9 U	10 U	10 U	NA	10 U	9 U
CARBAZOLE	NA	10 U	NA	NA	NA	9 U	NA	NA	9 U	10 U	10 UJ	NA	10 U	9 U
CHRYSENE	NA	10 U	NA	NA	NA	9 U	NA	NA	9 U	10 U	10 U	NA	10 U	9 U
DIBENZO(A,H)ANTHRACENE	NA	10 U	NA	NA	NA	9 U	NA	NA	9 U	10 U	10 U	NA	10 U	9 U
DIBENZOFURAN	NA	10 U	NA	NA	NA	9 U	NA	NA	9 U	10 U	10 U	NA	10 U	9 U
DIETHYL PHTHALATE	NA	10 U	NA	NA	NA	9 U	NA	NA	9 U	10 U	10 U	NA	10 U	9 U
DIMETHYL PHTHALATE	NA	10 U	NA	NA	NA	9 U	NA	NA	9 U	10 U	10 U	NA	10 U	9 U
DI-N-BUTYL PHTHALATE	NA	10 U	NA	NA	NA	9 U	NA	NA	9 U	10 U	10 U	NA	10 U	9 U
DI-N-OCTYL PHTHALATE	NA	10 U	NA	NA	NA	9 U	NA	NA	9 UJ	10 U	10 U	NA	10 U	9 U
FLUORANTHENE	NA	10 U	NA	NA	NA	9 U	NA	NA	9 U	10 U	10 U	NA	10 U	9 U
FLUORENE	NA	10 U	NA	NA	NA	9 U	NA	NA	9 U	10 U	10 U	NA	10 U	9 U
HEXACHLOROBENZENE	NA	10 U	NA	NA	NA	9 U	NA	NA	9 U	10 U	10 U	NA	10 U	9 U
HEXACHLOROETHANE	NA	10 U	NA	NA	NA	9 U	NA	NA	9 U	10 U	10 U	NA	10 U	9 U
HIGH MOLECULAR WEIGHT PAHS	NA	10 U	NA	NA	NA	9 U	NA	NA	9 U	10 U	10 U	NA	10 U	9 U
INDENO(1,2,3-CD)PYRENE	NA	10 U	NA	NA	NA	9 U	NA	NA	9 U	10 U	10 U	NA	10 U	9 U
ISOPHORONE	NA	10 U	NA	NA	NA	9 U	NA	NA	9 U	10 U	10 U	NA	10 U	9 U
LOW MOLECULAR WEIGHT PAHS	NA	10 U	NA	NA	NA	9 U	NA	NA	9 U	10 U	10 U	NA	10 U	9 U
NAPHTHALENE	NA	10 U	NA	NA	NA	9 U	NA	NA	9 U	10 U	10 U	NA	10 U	9 U
NITROBENZENE	NA	10 U	NA	NA	NA	9 U	NA	NA	9 UJ	10 U	10 U	NA	10 U	9 U
N-NITROSODIMETHYLAMINE	NA	10 U	NA	NA	NA	9 U	NA	NA	9 U	10 U	10 U	NA	10 U	9 U
N-NITROSO-DI-N-PROPYLAMINE	NA	10 U	NA	NA	NA	9 U	NA	NA	9 U	10 U	10 U	NA	10 U	9 U
N-NITROSODIPHENYLAMINE	NA	10 U	NA	NA	NA	9 U	NA	NA	9 U	10 U	10 U	NA	10 U	9 U
N-NITROSOPYRROLIDINE	NA	10 U	NA	NA	NA	9 U	NA	NA	9 U	10 U	10 U	NA	10 U	9 U
PENTACHLOROPHENOL	NA	25 UJ	NA	NA	NA	24 U	NA	NA	24 U	25.5 U	25 U	NA	26 UJ	24 U
PHENANTHRENE	NA	10 U	NA	NA	NA	9 U	NA	NA	9 U	10 U	10 U	NA	10 U	9 U
PHENOL	NA	10 UJ	NA	NA	NA	9 U	NA	NA	9 UJ	10 U	10 U	NA	10 UJ	9 U
PYRENE	NA	10 U	NA	NA	NA	9 U	NA	NA	9 U	10 U	10 U	NA	10 U	9 U
TOTAL PAHS	NA	10 U	NA	NA	NA	9 U	NA	NA	9 U	10 U	10 U	NA	10 U	9 U

SHADED - DETECTED
U-NOT DETECTED; J-QUANTITATION APPROXIMATE; R-REJECTED; NA-NOT ANALYZED

SAMPLE ID	DA-MW8B-062210	DA-MW09B-52808	DA-MW-09B-062910	DA-MW-11-062910-AVG	DA-MW-12-063010	DA-GW-MW13A-080408-AVG	DA-MW-13B-063010	DA-MW100B-51308	DA-MW-100B-091908	DA-MW101B-53008-AVG	DA-GW-MW101B-073108	DA-MW101B-062310	DA-MW102B-52708	DA-GW-MW102B-080408
LOCATION ID	DA-MW08B	DA-MW09B		DA-MW11	DA-MW12	DA-MW13A	DA-MW13B	DA-MW100B		DA-MW101B			DA-MW102B	
SAMPLE DATE	06/22/10	05/28/08	06/29/10	06/29/10	06/30/10	08/04/08	06/30/10	05/13/08	09/18/08	05/30/08	07/31/08	06/23/10	05/27/08	08/01/08
SCREEN TOP DEPTH	6.5	10.0	10.0	4.0	0.0	0.0	13.0	15.0	15.0	10.0	10.0	10.0	14.0	14.0
SCREEN BOTTOM DEPTH	16.8	21.4	21.4	9.0	4.0	6.0	23.9	45.0	45.0	50.0	50.0	50.0	44.0	44.0
WELL DEPTH	16.09	21.41	21.41	4.6	4	6	24.73	45	45	50	50	50	44	44
SACODE	NORMAL	NORMAL	NORMAL	AVG	NORMAL	AVG	NORMAL	NORMAL	NORMAL	AVG	NORMAL	NORMAL	NORMAL	NORMAL
QC TYPE	NM	NM	NM	NM	NM	NM	NM	NM	NM	NM	NM	NM	NM	NM
PESTICIDES/PCBS (UG/L)														
4,4'-DDD	NA	0.02 U	NA	NA	NA	NA	NA	NA	NA	0.02 U	NA	NA	0.022 UJ	NA
4,4'-DDE	NA	0.02 U	NA	NA	NA	NA	NA	NA	NA	0.02 U	NA	NA	0.022 UJ	NA
4,4'-DDT	NA	0.02 U	NA	NA	NA	NA	NA	NA	NA	0.02 U	NA	NA	0.022 UJ	NA
ALDRIN	NA	0.01 U	NA	NA	NA	NA	NA	NA	NA	0.01 U	NA	NA	0.011 UJ	NA
ALPHA-BHC	NA	0.01 U	NA	NA	NA	NA	NA	NA	NA	0.01 U	NA	NA	0.011 UJ	NA
ALPHA-CHLORDANE	NA	0.01 U	NA	NA	NA	NA	NA	NA	NA	0.01 U	NA	NA	0.011 UJ	NA
AROCLOR-1016	NA	0.11 U	NA	NA	NA	0.10 U	NA	NA	NA	0.1 U	0.1 UJ	NA	0.1 U	0.1 U
AROCLOR-1221	NA	0.11 U	NA	NA	NA	0.10 U	NA	NA	NA	0.1 U	0.1 U	NA	0.1 U	0.1 U
AROCLOR-1232	NA	0.11 U	NA	NA	NA	0.10 U	NA	NA	NA	0.1 U	0.1 U	NA	0.1 U	0.1 U
AROCLOR-1242	NA	0.11 U	NA	NA	NA	0.10 U	NA	NA	NA	0.1 U	0.1 U	NA	0.1 U	0.1 U
AROCLOR-1248	NA	0.11 U	NA	NA	NA	0.10 U	NA	NA	NA	0.1 U	0.1 U	NA	0.1 U	0.1 U
AROCLOR-1254	NA	0.11 U	NA	NA	NA	0.10 U	NA	NA	NA	0.1 U	0.1 U	NA	0.1 U	0.1 U
AROCLOR-1260	NA	0.11 U	NA	NA	NA	0.10 U	NA	NA	NA	0.1 U	0.1 UJ	NA	0.1 U	0.1 U
AROCLOR-1268	NA	0.11 U	NA	NA	NA	0.10 U	NA	NA	NA	0.1 U	0.1 U	NA	0.1 U	0.1 U
BETA-BHC	NA	0.01 U	NA	NA	NA	NA	NA	NA	NA	0.01 U	NA	NA	0.011 UJ	NA
DELTA-BHC	NA	0.01 U	NA	NA	NA	NA	NA	NA	NA	0.01 UJ	NA	NA	0.011 UJ	NA
DIELDRIN	NA	0.02 U	NA	NA	NA	NA	NA	NA	NA	0.02 U	NA	NA	0.022 UJ	NA
ENDOSULFAN I	NA	0.01 U	NA	NA	NA	NA	NA	NA	NA	0.01 U	NA	NA	0.011 UJ	NA
ENDOSULFAN II	NA	0.02 U	NA	NA	NA	NA	NA	NA	NA	0.02 U	NA	NA	0.022 UJ	NA
ENDOSULFAN SULFATE	NA	0.02 U	NA	NA	NA	NA	NA	NA	NA	0.02 U	NA	NA	0.022 UJ	NA
ENDRIN	NA	0.02 U	NA	NA	NA	NA	NA	NA	NA	0.02 U	NA	NA	0.022 UJ	NA
ENDRIN ALDEHYDE	NA	0.02 U	NA	NA	NA	NA	NA	NA	NA	0.02 U	NA	NA	0.022 UJ	NA
ENDRIN KETONE	NA	0.02 U	NA	NA	NA	NA	NA	NA	NA	0.02 U	NA	NA	0.022 UJ	NA
GAMMA-BHC (LINDANE)	NA	0.01 U	NA	NA	NA	NA	NA	NA	NA	0.01 U	NA	NA	0.011 UJ	NA
GAMMA-CHLORDANE	NA	0.01 U	NA	NA	NA	NA	NA	NA	NA	0.01 U	NA	NA	0.011 UJ	NA
HEPTACHLOR	NA	0.01 U	NA	NA	NA	NA	NA	NA	NA	0.01 U	NA	NA	0.011 UJ	NA
HEPTACHLOR EPOXIDE	NA	0.01 U	NA	NA	NA	NA	NA	NA	NA	0.01 U	NA	NA	0.011 UJ	NA
METHOXYCHLOR	NA	0.1 U	NA	NA	NA	NA	NA	NA	NA	0.1 U	NA	NA	0.11 UJ	NA
TOTAL AROCLOR	NA	0.11 U	NA	NA	NA	0.1 U	NA	NA	NA	0.1 U	0.1 UJ	NA	0.1 U	0.1 U
TOTAL DDD/DDE/DDT	NA	0.02 U	NA	NA	NA	NA	NA	NA	NA	0.02 U	NA	NA	0.022 UJ	NA
TOXAPHENE	NA	0.2 U	NA	NA	NA	NA	NA	NA	NA	0.2 U	NA	NA	0.22 UJ	NA
EXPLOSIVES (UG/L)														
1,2-PROPYLENE GLYCOL DINITRATE	NA	NA	0.1 U	0.1 U	0.1 U	NA	0.1 U	NA	NA	NA	NA	0.1 U	NA	NA

SHADED - DETECTED
U-NOT DETECTED; J-QUANTITATION APPROXIMATE; R-REJECTED; NA-NOT ANALYZED

SAMPLE ID	DA-MW8B-062210	DA-MW09B-52808	DA-MW-09B-062910	DA-MW-11-062910-AVG	DA-MW-12-063010	DA-GW-MW13A-080408-AVG	DA-MW-13B-063010	DA-MW100B-51308	DA-MW-100B-091908	DA-MW101B-53008-AVG	DA-GW-MW101B-073108	DA-MW101B-062310	DA-MW102B-52708	DA-GW-MW102B-080408
LOCATION ID	DA-MW08B	DA-MW09B		DA-MW11	DA-MW12	DA-MW13A	DA-MW13B	DA-MW100B		DA-MW101B			DA-MW102B	
SAMPLE DATE	06/22/10	05/28/08	06/29/10	06/29/10	06/30/10	08/04/08	06/30/10	05/13/08	09/18/08	05/30/08	07/31/08	06/23/10	05/27/08	08/01/08
SCREEN TOP DEPTH	6.5	10.0	10.0	4.0	0.0	0.0	13.0	15.0	15.0	10.0	10.0	10.0	14.0	14.0
SCREEN BOTTOM DEPTH	16.8	21.4	21.4	9.0	4.0	6.0	23.9	45.0	45.0	50.0	50.0	50.0	44.0	44.0
WELL DEPTH	16.09	21.41	21.41	4.6	4	6	24.73	45	45	50	50	50	44	44
SACODE	NORMAL	NORMAL	NORMAL	AVG	NORMAL	AVG	NORMAL	NORMAL	NORMAL	AVG	NORMAL	NORMAL	NORMAL	NORMAL
QC TYPE	NM	NM	NM	NM	NM	NM	NM	NM	NM	NM	NM	NM	NM	NM
METALS (UG/L)														
ALUMINUM	NA	38 UJ	NA	NA	NA	NA	NA	NA	NA	4920	NA	NA	1950	NA
ANTIMONY	NA	1.7 UJ	NA	NA	NA	NA	NA	NA	NA	1.09 UJ	NA	NA	0.78 U	NA
ARSENIC	NA	1.69 U	NA	NA	NA	NA	NA	NA	NA	2.45 J	NA	NA	1.69 U	NA
BARIUM	NA	19.1 J	NA	NA	NA	NA	NA	NA	NA	14 J	NA	NA	6.5 UJ	NA
BERYLLIUM	NA	0.13 U	NA	NA	NA	NA	NA	NA	NA	0.14 UJ	NA	NA	0.13 U	NA
CADMIUM	NA	0.09 UJ	NA	NA	NA	NA	NA	NA	NA	0.05 UJ	NA	NA	0.42 UJ	NA
CALCIUM	NA	50100	NA	NA	NA	NA	NA	NA	NA	77600	NA	NA	57000	NA
CHROMIUM	NA	0.66 UJ	NA	NA	NA	NA	NA	NA	NA	7.4 J	NA	NA	5.6 J	NA
COBALT	NA	0.24 U	NA	NA	NA	NA	NA	NA	NA	4.05 J	NA	NA	4.1 J	NA
COPPER	NA	6.7 UJ	NA	NA	NA	NA	NA	NA	NA	9.3 UJ	NA	NA	17.3 J	NA
IRON	NA	28300	NA	NA	NA	NA	NA	NA	NA	10200	NA	NA	23200	NA
LEAD	NA	1.8 J	NA	NA	NA	NA	NA	NA	NA	3.7 J	NA	NA	3.5 J	NA
MAGNESIUM	NA	7790	NA	NA	NA	NA	NA	NA	NA	14000	NA	NA	9950	NA
MANGANESE	NA	547	NA	NA	NA	NA	NA	NA	NA	248	NA	NA	3050	NA
MERCURY	NA	0.03 U	NA	NA	NA	NA	NA	NA	NA	0.03 U	NA	NA	0.03 U	NA
MOLYBDENUM	NA	0.48 UJ	NA	NA	NA	NA	NA	NA	NA	1.3 UJ	NA	NA	0.86 UJ	NA
NICKEL	NA	1.2 UJ	NA	NA	NA	NA	NA	NA	NA	7.4 J	NA	NA	6 J	NA
POTASSIUM	NA	1850	NA	NA	NA	NA	NA	NA	NA	1520	NA	NA	1330	NA
SELENIUM	NA	0.96 U	NA	NA	NA	NA	NA	NA	NA	0.96 U	NA	NA	0.96 U	NA
SILVER	NA	0.69 J	NA	NA	NA	NA	NA	NA	NA	0.268 J	NA	NA	0.29 U	NA
SODIUM	NA	47100	NA	NA	NA	NA	NA	NA	NA	33100	NA	NA	21200	NA
THALLIUM	NA	1.64 U	NA	NA	NA	NA	NA	NA	NA	1.64 U	NA	NA	1.64 U	NA
VANADIUM	NA	0.38 U	NA	NA	NA	NA	NA	NA	NA	7.65 J	NA	NA	2 UJ	NA
ZINC	NA	42	NA	NA	NA	NA	NA	NA	NA	34.2 J	NA	NA	21.5 J	NA
DISSOLVED METALS (UG/L)														
ALUMINUM	NA	14.6 U	NA	NA	NA	NA	NA	NA	NA	27.2 UJ	NA	NA	186 J	NA
ANTIMONY	NA	0.78 U	NA	NA	NA	NA	NA	NA	NA	2.1 UJ	NA	NA	0.78 U	NA
ARSENIC	NA	1.69 U	NA	NA	NA	NA	NA	NA	NA	1.69 U	NA	NA	1.69 U	NA
BARIUM	NA	17.9	NA	NA	NA	NA	NA	NA	NA	4.85 UJ	NA	NA	2.4 UJ	NA
BERYLLIUM	NA	0.13 U	NA	NA	NA	NA	NA	NA	NA	0.13 U	NA	NA	0.13 U	NA
CADMIUM	NA	0.04 UJ	NA	NA	NA	NA	NA	NA	NA	0.04 U	NA	NA	0.04 U	NA
CALCIUM	NA	49600	NA	NA	NA	NA	NA	NA	NA	77400	NA	NA	55100	NA
CHROMIUM	NA	0.74 UJ	NA	NA	NA	NA	NA	NA	NA	0.54 UJ	NA	NA	1 UJ	NA
COBALT	NA	0.25 UJ	NA	NA	NA	NA	NA	NA	NA	0.475 UJ	NA	NA	2.6 UJ	NA
COPPER	NA	0.75 U	NA	NA	NA	NA	NA	NA	NA	0.75 U	NA	NA	3.9 UJ	NA
IRON	NA	556	NA	NA	NA	NA	NA	NA	NA	9 UJ	NA	NA	5320	NA
LEAD	NA	0.97 U	NA	NA	NA	NA	NA	NA	NA	0.97 U	NA	NA	0.97 U	NA

SHADED - DETECTED
U-NOT DETECTED; J-QUANTITATION APPROXIMATE; R-REJECTED; NA-NOT ANALYZED

SAMPLE ID	DA-MW8B-062210	DA-MW09B-52808	DA-MW-09B-062910	DA-MW-11-062910-AVG	DA-MW-12-063010	DA-GW-MW13A-080408-AVG	DA-MW-13B-063010	DA-MW100B-51308	DA-MW-100B-091908	DA-MW101B-53008-AVG	DA-GW-MW101B-073108	DA-MW101B-062310	DA-MW102B-52708	DA-GW-MW102B-080408
LOCATION ID	DA-MW08B	DA-MW09B		DA-MW11	DA-MW12	DA-MW13A	DA-MW13B	DA-MW100B		DA-MW101B			DA-MW102B	
SAMPLE DATE	06/22/10	05/28/08	06/29/10	06/29/10	06/30/10	08/04/08	06/30/10	05/13/08	09/18/08	05/30/08	07/31/08	06/23/10	05/27/08	08/01/08
SCREEN TOP DEPTH	6.5	10.0	10.0	4.0	0.0	0.0	13.0	15.0	15.0	10.0	10.0	10.0	14.0	14.0
SCREEN BOTTOM DEPTH	16.8	21.4	21.4	9.0	4.0	6.0	23.9	45.0	45.0	50.0	50.0	50.0	44.0	44.0
WELL DEPTH	16.09	21.41	21.41	4.6	4	6	24.73	45	45	50	50	50	44	44
SACODE	NORMAL	NORMAL	NORMAL	AVG	NORMAL	AVG	NORMAL	NORMAL	NORMAL	AVG	NORMAL	NORMAL	NORMAL	NORMAL
QC TYPE	NM	NM	NM	NM	NM	NM	NM	NM	NM	NM	NM	NM	NM	NM
MAGNESIUM	NA	7740	NA	NA	NA	NA	NA	NA	NA	12600	NA	NA	9130	NA
MANGANESE	NA	385	NA	NA	NA	NA	NA	NA	NA	81.5	NA	NA	2860	NA
MERCURY	NA	0.03 U	NA	NA	NA	NA	NA	NA	NA	0.03 U	NA	NA	0.03 U	NA
MOLYBDENUM	NA	0.36 UJ	NA	NA	NA	NA	NA	NA	NA	1.35 UJ	NA	NA	0.3 U	NA
NICKEL	NA	0.42 U	NA	NA	NA	NA	NA	NA	NA	0.42 U	NA	NA	2 UJ	NA
POTASSIUM	NA	1780	NA	NA	NA	NA	NA	NA	NA	1240	NA	NA	1260	NA
SELENIUM	NA	0.96 U	NA	NA	NA	NA	NA	NA	NA	0.96 U	NA	NA	0.96 U	NA
SILVER	NA	0.29 U	NA	NA	NA	NA	NA	NA	NA	0.418 J	NA	NA	0.29 U	NA
SODIUM	NA	47300	NA	NA	NA	NA	NA	NA	NA	33800	NA	NA	20400	NA
THALLIUM	NA	1.64 U	NA	NA	NA	NA	NA	NA	NA	1.64 U	NA	NA	1.64 U	NA
VANADIUM	NA	0.43 UJ	NA	NA	NA	NA	NA	NA	NA	0.615 UJ	NA	NA	0.38 U	NA
ZINC	NA	5.2 UJ	NA	NA	NA	NA	NA	NA	NA	4.8 UJ	NA	NA	8.1 UJ	NA
MISCELLANEOUS PARAMETERS (MG/L)														
AMMONIA-N	NA	0.1 U	4.9	0.039 J	0.05 U	NA	NA	NA	NA	0.1 U	NA	0.05 U	0.1 U	NA
CHLORIDE	NA	NA	NA	NA	NA	NA	NA	NA	NA	NA	NA	NA	NA	NA
NITRATE-N	NA	0.05 U	0.018 J	0.0192 J	3.4	NA	NA	NA	NA	0.0315 J	NA	0.025 U	0.05 U	NA
NITRITE-N	NA	0.05 U	0.025 U	0.025 U	0.025 U	NA	NA	NA	NA	0.05 U	NA	0.025 U	0.05 U	NA
ORTHOPHOSPHATE-P	NA	0.018 J	0.05 U	0.05 U	0.05 U	NA	NA	NA	NA	0.0795 J	NA	0.05 U	0.024 J	NA
SULFATE	NA	2	1.1	20	23	NA	NA	NA	NA	14	NA	14	5.1	NA
SULFIDE	NA	1 U	0.8 U	0.8 U	0.73 J	NA	NA	NA	NA	1.05	NA	2.2	0.8 J	NA
TOTAL ORGANIC CARBON	NA	0.92 J	2.8	1.1	1	NA	NA	NA	NA	0.615 J	NA	1.1	1.3	NA
MISCELLANEOUS PARAMETERS (UG/L)														
CYANIDE	NA	NA	5.6 J	5 U	5 U	NA	5 U	NA	NA	NA	NA	5 U	NA	NA
METHANE	NA	500	NA	NA	NA	NA	NA	NA	NA	810	NA	NA	2.8 J	NA
FIELD (UG/L)														
FERROUS IRON	NA	1000	NA	NA	NA	NA	NA	NA	NA	70	NA	NA	3010	NA
PETROLEUM HYDROCARBONS (UG/L)														
EXTRACTABLE TPH (C09-C36)	NA	82 U	NA	NA	NA	58 J	NA	NA	NA	70 J	75 U	NA	81	75 U
GASOLINE RANGE ORGANICS	NA	19 U	NA	NA	NA	10 U	NA	NA	NA	105	83	NA	10 U	22

SHADED - DETECTED
U-NOT DETECTED; J-QUANTITATION APPROXIMATE; R-REJECTED; NA-NOT ANALYZED

SAMPLE ID	DA-MW103B-52308	DA-MW-103B-070110	DA-MW103S-52608	DA-MW104B-52008	DA-MW104B-061810	DA-MW105B-52008	DA-MW-105B-062810	DA-MW106B-52108	DA-MW106S-52208	DA-MW107B-6408	DA-MW108B-6308-AVG	DA-MW109-1924	DA-MW109-3035	DA-MW109-3641	DA-MW109B-6208
LOCATION ID	DA-MW103B		DA-MW103S	DA-MW104B		DA-MW105B		DA-MW106B		DA-MW107B	DA-MW108B	DA-MW109B			
SAMPLE DATE	05/23/08	07/01/10	05/26/08	05/20/08	06/18/10	05/20/08	06/28/10	05/21/08	05/22/08	06/04/08	06/03/08	05/08/08	05/08/08	05/08/08	06/02/08
SCREEN TOP DEPTH	20.0	20.0	14.5	19.0	19.0	18.0	18.0	20.0	9.0	15.0	15.0	15.0	15.0	15.0	15.0
SCREEN BOTTOM DEPTH	50.0	50.0	19.5	42.0	42.0	48.0	48.0	50.0	19.0	45.0	45.0	45.0	45.0	45.0	45.0
WELL DEPTH	50	50	19.5	42	42	48	48	50	20	45	45	45	45	45	45
SACODE	NORMAL	NORMAL	NORMAL	NORMAL	NORMAL	NORMAL	NORMAL	NORMAL	NORMAL	NORMAL	AVG	NORMAL	NORMAL	NORMAL	NORMAL
QC TYPE	NM	NM	NM	NM	NM	NM	NM	NM	NM	NM	NM	NM	NM	NM	NM
VOLATILES (UG/L)															
1,1,1,2-TETRACHLOROETHANE	1 U	0.5 U	1 U	1 U	0.5 U	1 U	0.5 U	1 U	1 U	1 U	1 U	1 U	1 U	1 U	1 U
1,1,1-TRICHLOROETHANE	1	7.9	1 U	4	7.5	3	3.3	1 U	1 U	1 U	1 U	1 U	1 U	1 U	1 U
1,1,2,2-TETRACHLOROETHANE	1 U	0.5 U	1 U	1 U	0.5 U	1 U	0.5 U	1 U	1 U	1 U	1 U	1 U	1 U	1 U	1 U
1,1,2-TRICHLOROETHANE	1 U	0.5 U	1 U	1 U	0.5 U	1 U	0.5 U	1 U	1 U	1 U	1 U	1 U	1 U	1 U	1 U
1,1-DICHLOROETHANE	19	160	1 U	130	230 J	100	110	1 U	1 U	1 U	1 U	1 U	1 U	1 U	1 U
1,1-DICHLOROETHENE	1	12	1 U	7	14	5	7.4	1 U	1 U	1 U	1 U	1 U	1 U	1 U	1 U
1,1-DICHLOROPROPENE	1 U	0.5 U	1 U	1 U	0.5 U	1 U	0.5 U	1 U	1 U	1 U	1 U	1 U	1 U	1 U	1 U
1,2,3-TRICHLOROBENZENE	1 U	0.5 U	1 U	1 U	0.5 U	1 U	0.5 U	1 U	1 U	1 U	1 U	1 U	1 U	1 U	1 U
1,2,3-TRICHLOROPROPANE	1 U	0.5 U	1 U	1 U	0.5 U	1 UJ	0.5 U	1 U	1 U	1 U	1 U	1 U	1 U	1 U	1 U
1,2,4-TRICHLOROBENZENE	1 U	0.5 U	1 U	1 U	0.5 U	1 U	0.5 U	1 U	1 U	1 U	1 U	1 U	1 U	1 U	1 U
1,2,4-TRIMETHYLBENZENE	1 U	0.5 U	1 U	1 U	0.5 U	1 U	0.5 U	1 U	1 U	1 U	1 U	1 U	1 U	1 U	1 U
1,2-DIBROMO-3-CHLOROPROPANE	1 U	0.75 UJ	1 U	1 U	0.75 U	1 UJ	0.75 U	1 U	1 U	1 U	1 U	1 U	1 U	1 U	1 U
1,2-DIBROMOETHANE	1 U	0.5 U	1 U	1 U	0.5 U	1 U	0.5 U	1 U	1 U	1 U	1 U	1 U	1 U	1 U	1 U
1,2-DICHLOROBENZENE	1 U	0.5 U	1 U	1 U	0.5 U	1 U	0.5 U	1 U	1 U	1 U	1 U	1 U	1 U	1 U	1 U
1,2-DICHLOROETHANE	1 U	0.5 U	1 U	1 U	0.5 U	1 U	0.5 U	1 U	1 U	1 U	1 U	1 U	1 U	1 U	1 U
1,2-DICHLOROPROPANE	1 U	0.5 U	1 U	1 U	0.5 U	1 U	0.5 U	1 U	1 U	1 U	1 U	1 U	1 U	1 U	1 U
1,3,5-TRIMETHYLBENZENE	1 U	0.5 U	1 U	1 U	0.5 U	1 U	0.5 U	1 U	1 U	1 U	1 U	1 U	1 U	1 U	1 U
1,3-DICHLOROBENZENE	1 U	0.5 U	1 U	1 U	0.5 U	1 U	0.5 U	1 U	1 U	1 U	1 U	1 U	1 U	1 U	1 U
1,3-DICHLOROPROPANE	1 U	0.5 U	1 U	1 U	0.5 U	1 U	0.5 U	1 U	1 U	1 U	1 U	1 U	1 U	1 U	1 U
1,4-DICHLOROBENZENE	1 U	0.5 U	1 U	1 U	0.5 U	1 U	0.5 U	1 U	1 U	1 U	1 U	1 U	1 U	1 U	1 U
2,2-DICHLOROPROPANE	1 U	0.5 U	1 U	1 U	0.5 U	1 U	0.5 U	1 U	1 U	1 UJ	1 UJ	1 U	1 U	1 U	1 U
2-BUTANONE	5 U	2.5 U	5 U	5 U	2.5 U	5 U	2.5 U	5 U	5 UJ	5 U	5 U	5 U	5 U	5 U	5 U
2-CHLOROTOLUENE	1 U	0.5 U	1 U	1 U	0.5 U	1 U	0.5 U	1 U	1 U	1 U	1 U	1 U	1 U	1 U	1 U
2-HEXANONE	5 U	2.5 U	5 U	5 U	2.5 U	5 U	2.5 U	5 U	5 UJ	5 U	5 U	5 U	5 U	5 U	5 U
4-CHLOROTOLUENE	1 U	0.5 U	1 U	1 U	0.5 U	1 U	0.5 U	1 U	1 U	1 U	1 U	1 U	1 U	1 U	1 U
4-ISOPROPYLTOLUENE	1 U	0.5 U	1 U	1 U	0.5 U	1 U	0.5 U	1 U	1 U	1 U	1 U	1 U	1 U	1 U	1 U
4-METHYL-2-PENTANONE	5 U	2.5 U	5 U	5 U	2.5 UJ	5 U	2.5 U	5 U	5 U	5 U	5 U	5 U	5 U	5 U	5 U
ACETONE	5 U	2.5 UJ	8	5 U	2.5 UJ	5 U	2.5 U	5 UJ	10 J	5 U	4 J	5 J	5 U	5 U	5 U
BENZENE	1 U	0.5 U	1 U	1 U	0.5 U	1 U	0.5 U	1 U	1 U	1 U	1 U	1 U	1 U	1 U	1 U
BROMOBENZENE	1 U	0.5 U	1 U	1 U	0.5 U	1 U	0.5 U	1 U	1 U	1 U	1 U	1 U	1 U	1 U	1 U
BROMOCHLOROMETHANE	1 U	0.5 U	1 U	1 U	0.5 U	1 U	0.5 U	1 U	1 U	1 U	1 U	1 U	1 U	1 U	1 U
BROMODICHLOROMETHANE	1 U	0.5 U	1 U	1 U	0.5 U	1 U	0.5 U	1 U	1 U	1 U	1 U	1 U	1 U	1 U	1 U
BROMOFORM	1 U	0.5 U	1 U	1 U	0.5 U	1 U	0.5 U	1 U	1 U	1 U	1 U	1 U	1 U	1 U	1 U

SAMPLE ID	DA-MW103B-52308	DA-MW-103B-070110	DA-MW103S-52608	DA-MW104B-52008	DA-MW104B-061810	DA-MW105B-52008	DA-MW-105B-062810	DA-MW106B-52108	DA-MW106S-52208	DA-MW107B-6408	DA-MW108B-6308-AVG	DA-MW109-1924	DA-MW109-3035	DA-MW109-3641	DA-MW109B-6208
LOCATION ID	DA-MW103B		DA-MW103S	DA-MW104B		DA-MW105B		DA-MW106B		DA-MW107B	DA-MW108B	DA-MW109B			
SAMPLE DATE	05/23/08	07/01/10	05/26/08	05/20/08	06/18/10	05/20/08	06/28/10	05/21/08	05/22/08	06/04/08	06/03/08	05/08/08	05/08/08	05/08/08	06/02/08
SCREEN TOP DEPTH	20.0	20.0	14.5	19.0	19.0	18.0	18.0	20.0	9.0	15.0	15.0	15.0	15.0	15.0	15.0
SCREEN BOTTOM DEPTH	50.0	50.0	19.5	42.0	42.0	48.0	48.0	50.0	19.0	45.0	45.0	45.0	45.0	45.0	45.0
WELL DEPTH	50	50	19.5	42	42	48	48	50	20	45	45	45	45	45	45
SACODE	NORMAL	NORMAL	NORMAL	NORMAL	NORMAL	NORMAL	NORMAL	NORMAL	NORMAL	NORMAL	AVG	NORMAL	NORMAL	NORMAL	NORMAL
QC TYPE	NM	NM	NM	NM	NM	NM	NM	NM	NM	NM	NM	NM	NM	NM	NM
BROMOMETHANE	2 U	1 U	2 U	2 U	1 U	2 U	1 U	2 U	2 U	2 UJ	2 UJ	2 U	2 U	2 U	2 U
BTEX	1.1 U	0.562 U	1.1 U	1.1 U	0.562 U	1.1 U	0.562 U	1.1 U	1.1 U	1.1 U	0.6 J	41	9	4	1.1 U
CARBON DISULFIDE	1 U	0.5 U	1 U	1 U	0.5 U	1 U	0.5 U	1 U	1 U	1 U	1 U	0.6 J	1 U	1 U	1 U
CARBON TETRACHLORIDE	1 U	0.5 U	1 U	1 U	0.5 U	1 U	0.5 U	1 U	1 U	1 U	1 U	1 U	1 U	1 U	1 U
CHLOROBENZENE	1 U	0.5 U	1 U	1 U	0.5 U	1 U	0.5 U	1 U	1 U	1 U	1 U	1 U	1 U	1 U	1 U
CHLORODIBROMOMETHANE	1 U	0.5 U	1 U	1 U	0.5 U	1 U	0.5 U	1 U	1 U	1 U	1 U	1 U	1 U	1 U	1 U
CHLOROETHANE	2 U	1.9 J	2 U	2 U	1 U	2 U	1 U	2 U	2 U	2 U	2 U	2 UJ	2 UJ	2 UJ	2 U
CHLOROFORM	1 U	0.5 U	1 U	1 U	0.5 U	1 U	0.5 U	1 U	1 U	1 U	1 U	1 U	1 U	1 U	1
CHLOROMETHANE	2 U	1 U	2 U	2 U	1 U	2 UJ	1 U	2 U	2 U	2 U	2 U	2 U	2 U	2 U	2 U
CIS-1,2-DICHLOROETHENE	4	21	1 U	8	8.9	3	3.8	1 U	1 U	1 U	9.5	4	6	4	3
CIS-1,3-DICHLOROPROPENE	1 U	0.5 U	1 U	1 U	0.5 U	1 U	0.5 U	1 U	1 U	1 U	1 U	1 U	1 U	1 U	1 U
DIBROMOMETHANE	1 U	0.5 U	1 U	1 U	0.5 U	1 U	0.5 U	1 U	1 U	1 U	1 U	1 U	1 U	1 U	1 U
DICHLORODIFLUOROMETHANE	2 U	1 U	2 U	2 U	1 U	2 UJ	1 U	2 U	2 U	2 U	2 U	2 U	2 U	2 U	2 U
ETHYLBENZENE	1 U	0.5 U	1 U	1 U	0.5 U	1 U	0.5 U	1 U	1 U	1 U	1 U	1 U	1 U	1 U	1 U
HEXACHLOROBUTADIENE	1 U	0.5 U	1 U	1 U	0.5 U	1 U	0.5 U	1 U	1 U	1 U	1 U	1 U	1 U	1 U	1 UJ
ISOPROPYLBENZENE	1 U	0.5 U	1 U	1 U	0.5 U	1 U	0.5 U	1 U	1 U	1 U	1 U	1 U	1 U	1 U	1 U
M+P-XYLENES	2 U	1 U	2 U	2 U	1 U	2 U	1 U	2 U	2 U	2 U	2 U	2 U	2 U	2 U	2 U
METHYL TERT-BUTYL ETHER	1 U	0.5 U	1 U	1 U	0.5 U	1 U	0.5 U	1 U	1 U	1 U	1 U	1 U	1 U	1 U	1 U
METHYLENE CHLORIDE	5 U	2.5 U	5 U	5 U	2.5 U	5 U	2.5 U	5 U	5 U	5 U	5 U	5 U	5 U	5 U	5 U
N-BUTYLBENZENE	1 U	0.5 U	1 U	1 U	0.5 U	1 U	0.5 U	1 U	1 U	1 U	1 U	1 U	1 U	1 U	1 U
N-PROPYLBENZENE	1 U	0.5 U	1 U	1 U	0.5 U	1 U	0.5 U	1 U	1 U	1 U	1 U	1 U	1 U	1 U	1 U
O-XYLENE	1 U	0.5 U	1 U	1 U	0.5 U	1 U	0.5 U	1 U	1 U	1 U	1 U	1 U	1 U	1 U	1 U
SEC-BUTYLBENZENE	1 U	0.5 U	1 U	1 U	0.5 U	1 U	0.5 U	1 U	1 U	1 U	1 U	1 U	1 U	1 U	1 U
STYRENE	1 U	0.5 U	1 U	1 U	0.5 U	1 U	0.5 U	1 U	1 U	1 U	1 U	1 U	1 U	1 U	1 U
TERT-BUTYLBENZENE	1 U	0.5 U	1 U	1 UJ	0.5 U	1 U	0.5 U	1 U	1 U	1 U	1 U	1 U	1 U	1 U	1 U
TETRACHLOROETHENE	1 U	0.5 U	1 U	0.5 J	2.7	3	2.6	1 U	1 U	1 U	7	2 J	5 J	4 J	3
TOLUENE	1 U	0.5 U	1 U	1 U	0.5 U	1 U	0.5 U	1 U	1 U	1 U	0.6 J	41	9	4	1 U
TOTAL 1,2-DICHLOROETHENE	4	21	1 U	8	8.9	3	3.8	1 U	1 U	1 U	9.5	4	6	4	3
TOTAL CHLORINATED ETHENES	10	51.7	1.2 U	16.5 J	33.3 J	8.6 J	16.8 J	1.2 U	1.2 U	1.2 U	18.9 J	7 J	13.6 J	9 J	7.4 J
TOTAL CHLORINATED VOCS	31	222 J	1.3 U	157.5 J	271 J	116.6 J	130 J	1.3 U	1.3 U	1.3 U	18.9 J	7 J	13.6 J	9 J	8.4 J
TOTAL XYLENES	1.5 U	0.75 U	1.5 U	1.5 U	0.75 U	1.5 U	0.75 U	1.5 U	1.5 U	1.5 U	1.5 U	1.5 U	1.5 U	1.5 U	1.5 U
TRANS-1,2-DICHLOROETHENE	1 U	0.5 U	1 U	1 U	0.5 U	1 U	0.5 U	1 U	1 U	1 U	1 U	1 U	1 U	1 U	1 U
TRANS-1,3-DICHLOROPROPENE	1 U	0.5 U	1 U	1 U	0.5 U	1 U	0.5 U	1 U	1 U	1 U	1 U	1 U	1 U	1 U	1 U
TRICHLOROETHENE	6	15	1 U	7	6.3	2	2.4	1 U	1 U	1 U	2	1	2	1	1
TRICHLOROFLUOROMETHANE	2 U	1 U	2 U	2 U	1 U	2 U	1 U	2 U	2 U	2 U	2 U	2 U	2 U	2 U	2 U
VINYL CHLORIDE	2 U	3.7	2 U	1 J	1.4 J	0.6 J	0.64 J	2 U	2 U	2 U	0.4 J	2 U	0.6 J	2 U	0.4 J

SHADED - DETECTED
U-NOT DETECTED; J-QUANTITATION APPROXIMATE; R-REJECTED; NA-NOT ANALYZED

SAMPLE ID	DA-MW103B-52308	DA-MW-103B-070110	DA-MW103S-52608	DA-MW104B-52008	DA-MW104B-061810	DA-MW105B-52008	DA-MW-105B-062810	DA-MW106B-52108	DA-MW106S-52208	DA-MW107B-6408	DA-MW108B-6308-AVG	DA-MW109-1924	DA-MW109-3035	DA-MW109-3641	DA-MW109B-6208
LOCATION ID	DA-MW103B		DA-MW103S	DA-MW104B		DA-MW105B		DA-MW106B		DA-MW107B	DA-MW108B	DA-MW109B			
SAMPLE DATE	05/23/08	07/01/10	05/26/08	05/20/08	06/18/10	05/20/08	06/28/10	05/21/08	05/22/08	06/04/08	06/03/08	05/08/08	05/08/08	05/08/08	06/02/08
SCREEN TOP DEPTH	20.0	20.0	14.5	19.0	19.0	18.0	18.0	20.0	9.0	15.0	15.0	15.0	15.0	15.0	15.0
SCREEN BOTTOM DEPTH	50.0	50.0	19.5	42.0	42.0	48.0	48.0	50.0	19.0	45.0	45.0	45.0	45.0	45.0	45.0
WELL DEPTH	50	50	19.5	42	42	48	48	50	20	45	45	45	45	45	45
SACODE	NORMAL	NORMAL	NORMAL	NORMAL	NORMAL	NORMAL	NORMAL	NORMAL	NORMAL	NORMAL	AVG	NORMAL	NORMAL	NORMAL	NORMAL
QC TYPE	NM	NM	NM	NM	NM	NM	NM	NM	NM	NM	NM	NM	NM	NM	NM
VOLATILE GASES (UG/L)															
ETHANE	10 U	2 U	10 U	10 U	NA	10 U	2 U	10 U	10 U	10 U	10 U	NA	NA	NA	10 U
ETHENE	10 U	2 U	10 U	10 U	NA	10 U	2 U	10 U	10 U	10 U	10 U	NA	NA	NA	10 U
METHANE	NA	73 J	NA	NA	NA	NA	110 J	NA	NA	NA	NA	NA	NA	NA	NA
SEMIVOLATILES (UG/L)															
1,1-BIPHENYL	11 U	NA	12 U	11 U	NA	10 U	NA	10 U	10 U	10 U	10 U	NA	NA	NA	12 UJ
1,2-DIPHENYLHYDRAZINE	22 U	NA	24 U	22 U	NA	21 U	NA	20 U	20 U	20 U	20.5 U	NA	NA	NA	24 U
1,4-DIOXANE	NA	3.2	NA	NA	2.4	NA	1 J	NA	NA	NA	NA	NA	NA	NA	NA
2,2'-OXYBIS(1-CHLOROPROPANE)	11 U	NA	12 U	11 U	NA	10 U	NA	10 U	10 U	10 U	10 U	NA	NA	NA	12 U
2,4,5-TRICHLOROPHENOL	27 UR	NA	29 U	28 UJ	NA	26 UR	NA	25 U	25 U	25 U	25.5 UR	NA	NA	NA	29 UR
2,4,6-TRICHLOROPHENOL	11 UR	NA	12 U	11 UJ	NA	10 UR	NA	10 U	10 U	10 U	10 UR	NA	NA	NA	12 UR
2,4-DICHLOROPHENOL	11 UR	NA	12 U	11 UJ	NA	10 UR	NA	10 U	10 U	10 U	10 UR	NA	NA	NA	12 UR
2,4-DIMETHYLPHENOL	11 UR	NA	12 U	11 UJ	NA	10 UR	NA	10 U	10 U	10 U	10 UR	NA	NA	NA	12 UR
2,4-DINITROPHENOL	27 UR	NA	29 U	28 UJ	NA	26 UR	NA	25 U	25 U	25 UJ	25.5 UR	NA	NA	NA	29 UR
2,4-DINITROTOLUENE	11 U	NA	12 U	11 U	NA	10 U	NA	10 U	10 U	10 U	10 U	NA	NA	NA	12 U
2,6-DICHLOROPHENOL	11 UR	NA	12 U	11 UJ	NA	10 UR	NA	10 U	10 U	10 U	10 UR	NA	NA	NA	12 UR
2,6-DINITROTOLUENE	11 U	NA	12 U	11 U	NA	10 U	NA	10 U	10 U	10 U	10 U	NA	NA	NA	12 U
2-CHLORONAPHTHALENE	11 U	NA	12 U	11 U	NA	10 U	NA	10 U	10 U	10 U	10 U	NA	NA	NA	12 U
2-CHLOROPHENOL	11 UR	NA	12 U	11 UJ	NA	10 UR	NA	10 U	10 U	10 U	10 U	NA	NA	NA	12 UR
2-METHYLNAPHTHALENE	11 U	NA	12 U	11 UJ	NA	10 UJ	NA	10 U	10 U	10 U	10 U	NA	NA	NA	12 U
2-METHYLPHENOL	11 UR	NA	12 U	11 UJ	NA	10 UR	NA	10 U	10 U	10 U	10 UR	NA	NA	NA	12 UR
2-NITROANILINE	27 U	NA	29 U	28 U	NA	26 U	NA	25 U	25 U	25 U	25.5 U	NA	NA	NA	29 U
2-NITROPHENOL	11 UR	NA	12 U	11 UJ	NA	10 UR	NA	10 U	10 U	10 U	10 UR	NA	NA	NA	12 UR
3&4-METHYLPHENOL	11 UR	NA	12 U	11 UJ	NA	10 UR	NA	10 U	10 U	10 U	10 UR	NA	NA	NA	12 UR
3,3'-DICHLOROBENZIDINE	11 UJ	NA	12 UJ	11 UJ	NA	10 UJ	NA	10 UJ	10 UJ	10 UJ	10 UJ	NA	NA	NA	12 UJ
3-NITROANILINE	27 U	NA	29 U	28 U	NA	26 U	NA	25 U	25 U	25 UJ	25.5 UJ	NA	NA	NA	29 UJ
4,6-DINITRO-2-METHYLPHENOL	27 UR	NA	29 U	28 UJ	NA	26 UR	NA	25 U	25 UJ	25 U	25.5 UR	NA	NA	NA	29 UR
4-BROMOPHENYL PHENYL ETHER	11 U	NA	12 U	11 U	NA	10 U	NA	10 U	10 U	10 U	10 U	NA	NA	NA	12 U
4-CHLORO-3-METHYLPHENOL	27 UR	NA	29 U	28 UJ	NA	26 UR	NA	25 U	25 U	25 U	25.5 UR	NA	NA	NA	29 UR
4-CHLOROANILINE	11 UJ	NA	12 UJ	11 U	NA	10 U	NA	10 U	10 U	10 U	10 U	NA	NA	NA	12 U
4-CHLOROPHENYL PHENYL ETHER	11 U	NA	12 U	11 U	NA	10 U	NA	10 U	10 U	10 U	10 U	NA	NA	NA	12 U
4-NITROANILINE	27 U	NA	29 U	28 U	NA	26 U	NA	25 U	25 UJ	25 UJ	25.5 UJ	NA	NA	NA	29 UJ
4-NITROPHENOL	27 UR	NA	29 U	28 UJ	NA	26 UR	NA	25 U	25 UJ	25 UJ	25.5 UR	NA	NA	NA	29 UR
ACENAPHTHENE	11 U	NA	12 U	11 U	NA	10 U	NA	10 U	10 U	10 U	10 U	NA	NA	NA	12 U
ACENAPHTHYLENE	11 U	NA	12 U	11 U	NA	10 U	NA	10 U	10 U	10 U	10 U	NA	NA	NA	12 U
ANTHRACENE	11 U	NA	12 U	11 U	NA	10 U	NA	10 U	10 U	10 U	10 U	NA	NA	NA	12 U
BENZIDINE	54 UR	NA	59 UR	56 UR	NA	52 UR	NA	50 UR	50 UR	50 UR	51.5 UR	NA	NA	NA	59 UR

SHADED - DETECTED
U-NOT DETECTED; J-QUANTITATION APPROXIMATE; R-REJECTED; NA-NOT ANALYZED

SAMPLE ID	DA-MW103B-52308	DA-MW-103B-070110	DA-MW103S-52608	DA-MW104B-52008	DA-MW104B-061810	DA-MW105B-52008	DA-MW-105B-062810	DA-MW106B-52108	DA-MW106S-52208	DA-MW107B-6408	DA-MW108B-6308-AVG	DA-MW109-1924	DA-MW109-3035	DA-MW109-3641	DA-MW109B-6208
LOCATION ID	DA-MW103B		DA-MW103S	DA-MW104B		DA-MW105B		DA-MW106B		DA-MW107B	DA-MW108B	DA-MW109B			
SAMPLE DATE	05/23/08	07/01/10	05/26/08	05/20/08	06/18/10	05/20/08	06/28/10	05/21/08	05/22/08	06/04/08	06/03/08	05/08/08	05/08/08	05/08/08	06/02/08
SCREEN TOP DEPTH	20.0	20.0	14.5	19.0	19.0	18.0	18.0	20.0	9.0	15.0	15.0	15.0	15.0	15.0	15.0
SCREEN BOTTOM DEPTH	50.0	50.0	19.5	42.0	42.0	48.0	48.0	50.0	19.0	45.0	45.0	45.0	45.0	45.0	45.0
WELL DEPTH	50	50	19.5	42	42	48	48	50	20	45	45	45	45	45	45
SACODE	NORMAL	NORMAL	NORMAL	NORMAL	NORMAL	NORMAL	NORMAL	NORMAL	NORMAL	NORMAL	AVG	NORMAL	NORMAL	NORMAL	NORMAL
QC TYPE	NM	NM	NM	NM	NM	NM	NM	NM	NM	NM	NM	NM	NM	NM	NM
BENZO(A)ANTHRACENE	11 U	NA	12 U	11 U	NA	10 U	NA	10 U	10 U	10 U	10 U	NA	NA	NA	12 U
BENZO(A)PYRENE	11 U	NA	12 U	11 U	NA	10 U	NA	10 U	10 U	10 U	10 U	NA	NA	NA	12 U
BENZO(B)FLUORANTHENE	11 U	NA	12 U	11 U	NA	10 U	NA	10 U	10 U	10 U	10 U	NA	NA	NA	12 U
BENZO(G,H,I)PERYLENE	11 U	NA	12 U	11 U	NA	10 U	NA	10 U	10 U	10 U	10 U	NA	NA	NA	12 U
BENZO(K)FLUORANTHENE	11 U	NA	12 U	11 U	NA	10 U	NA	10 U	10 U	10 U	10 U	NA	NA	NA	12 U
BENZOIC ACID	27 UR	NA	29 UR	28 UR	NA	26 UR	NA	25 UR	25 UR	25 UR	25.5 UR	NA	NA	NA	29 UR
BENZYL ALCOHOL	22 U	NA	24 U	22 U	NA	21 U	NA	20 U	20 U	53 UJ	20.5 U	NA	NA	NA	24 U
BIS(2-CHLOROETHOXY)METHANE	11 U	NA	12 U	11 U	NA	10 U	NA	10 U	10 U	10 U	10 U	NA	NA	NA	12 U
BIS(2-CHLOROETHYL)ETHER	11 U	NA	12 U	11 U	NA	10 U	NA	10 U	10 U	10 U	10 U	NA	NA	NA	12 U
BIS(2-ETHYLHEXYL)PHTHALATE	11 U	NA	3 J	11 U	NA	10 U	NA	10 U	10 U	10 UJ	10 U	NA	NA	NA	12 U
BUTYL BENZYL PHTHALATE	11 U	NA	12 U	11 U	NA	10 U	NA	10 U	10 U	10 U	10 U	NA	NA	NA	12 U
CARBAZOLE	11 U	NA	12 U	11 U	NA	10 U	NA	10 U	10 U	10 U	10 U	NA	NA	NA	12 U
CHRYSENE	11 U	NA	12 U	11 U	NA	10 U	NA	10 U	10 U	10 U	10 U	NA	NA	NA	12 U
DIBENZO(A,H)ANTHRACENE	11 U	NA	12 U	11 U	NA	10 U	NA	10 U	10 U	10 U	10 U	NA	NA	NA	12 U
DIBENZOFURAN	11 U	NA	12 U	11 U	NA	10 U	NA	10 U	10 U	10 U	10 U	NA	NA	NA	12 U
DIETHYL PHTHALATE	11 U	NA	12 U	11 U	NA	10 U	NA	10 U	10 U	10 U	10 U	NA	NA	NA	12 U
DIMETHYL PHTHALATE	11 U	NA	12 U	11 U	NA	10 U	NA	10 U	10 U	10 U	10 U	NA	NA	NA	12 U
DI-N-BUTYL PHTHALATE	11 U	NA	12 U	11 U	NA	10 U	NA	3 J	10 U	10 U	10 U	NA	NA	NA	12 U
DI-N-OCTYL PHTHALATE	11 UJ	NA	12 UJ	11 UJ	NA	10 UJ	NA	10 UJ	10 U	10 U	10 U	NA	NA	NA	12 U
FLUORANTHENE	11 U	NA	12 U	11 U	NA	10 U	NA	10 U	10 U	10 U	10 U	NA	NA	NA	12 U
FLUORENE	11 U	NA	12 U	11 U	NA	10 U	NA	10 U	10 U	10 U	10 U	NA	NA	NA	12 U
HEXACHLOROBENZENE	11 U	NA	12 U	11 U	NA	10 U	NA	10 U	10 U	10 U	10 U	NA	NA	NA	12 U
HEXACHLOROETHANE	11 U	NA	12 U	11 U	NA	10 U	NA	10 U	10 U	10 U	10 U	NA	NA	NA	12 U
HIGH MOLECULAR WEIGHT PAHS	11 U	NA	12 U	11 U	NA	10 U	NA	10 U	10 U	10 U	10 U	NA	NA	NA	12 U
INDENO(1,2,3-CD)PYRENE	11 U	NA	12 U	11 U	NA	10 U	NA	10 U	10 U	10 U	10 U	NA	NA	NA	12 U
ISOPHORONE	11 U	NA	12 U	11 U	NA	10 U	NA	10 U	10 U	10 U	10 U	NA	NA	NA	12 U
LOW MOLECULAR WEIGHT PAHS	11 U	NA	3 J	11 UJ	NA	10 UJ	NA	10 U	10 U	10 U	10 U	NA	NA	NA	12 U
NAPHTHALENE	11 U	NA	12 U	11 U	NA	10 U	NA	10 U	10 U	10 U	10 U	NA	NA	NA	12 U
NITROBENZENE	11 U	NA	12 U	11 U	NA	10 U	NA	10 U	10 U	10 U	10 U	NA	NA	NA	12 U
N-NITROSODIMETHYLAMINE	11 U	NA	12 U	11 U	NA	10 U	NA	10 U	10 U	10 U	10 U	NA	NA	NA	12 U
N-NITROSO-DI-N-PROPYLAMINE	11 U	NA	12 U	11 U	NA	10 U	NA	10 U	10 U	10 U	10 U	NA	NA	NA	12 U
N-NITROSODIPHENYLAMINE	11 U	NA	12 U	11 U	NA	10 U	NA	10 U	10 U	10 U	10 U	NA	NA	NA	12 U
N-NITROSOPYRROLIDINE	11 U	NA	12 U	11 U	NA	10 U	NA	10 U	10 U	10 U	10 U	NA	NA	NA	12 U
PENTACHLOROPHENOL	27 UR	NA	29 U	28 UJ	NA	26 UR	NA	25 U	25 U	25 U	25.5 UR	NA	NA	NA	29 UR
PHENANTHRENE	11 U	NA	3 J	11 U	NA	10 U	NA	10 U	10 U	10 U	10 U	NA	NA	NA	12 U
PHENOL	11 UR	NA	12 U	11 UJ	NA	10 UR	NA	10 U	10 U	10 U	10 UR	NA	NA	NA	12 UR
PYRENE	11 U	NA	12 U	11 U	NA	10 U	NA	10 U	10 U	10 U	10 U	NA	NA	NA	12 U
TOTAL PAHS	11 U	NA	3 J	11 UJ	NA	10 UJ	NA	10 U	10 U	10 U	10 U	NA	NA	NA	12 U

SHADED - DETECTED
U-NOT DETECTED; J-QUANTITATION APPROXIMATE; R-REJECTED; NA-NOT ANALYZED

SAMPLE ID	DA-MW103B-52308	DA-MW-103B-070110	DA-MW103S-52608	DA-MW104B-52008	DA-MW104B-061810	DA-MW105B-52008	DA-MW-105B-062810	DA-MW106B-52108	DA-MW106S-52208	DA-MW107B-6408	DA-MW108B-6308-AVG	DA-MW109-1924	DA-MW109-3035	DA-MW109-3641	DA-MW109B-6208
LOCATION ID	DA-MW103B		DA-MW103S	DA-MW104B		DA-MW105B		DA-MW106B		DA-MW107B	DA-MW108B	DA-MW109B			
SAMPLE DATE	05/23/08	07/01/10	05/26/08	05/20/08	06/18/10	05/20/08	06/28/10	05/21/08	05/22/08	06/04/08	06/03/08	05/08/08	05/08/08	05/08/08	06/02/08
SCREEN TOP DEPTH	20.0	20.0	14.5	19.0	19.0	18.0	18.0	20.0	9.0	15.0	15.0	15.0	15.0	15.0	15.0
SCREEN BOTTOM DEPTH	50.0	50.0	19.5	42.0	42.0	48.0	48.0	50.0	19.0	45.0	45.0	45.0	45.0	45.0	45.0
WELL DEPTH	50	50	19.5	42	42	48	48	50	20	45	45	45	45	45	45
SACODE	NORMAL	NORMAL	NORMAL	NORMAL	NORMAL	NORMAL	NORMAL	NORMAL	NORMAL	NORMAL	AVG	NORMAL	NORMAL	NORMAL	NORMAL
QC TYPE	NM	NM	NM	NM	NM	NM	NM	NM	NM	NM	NM	NM	NM	NM	NM
PESTICIDES/PCBS (UG/L)															
4,4'-DDD	0.022 U	NA	0.024 U	0.021 U	NA	0.02 U	NA	0.02 U	0.02 U	0.02 U	0.021 U	NA	NA	NA	0.02 UJ
4,4'-DDE	0.022 U	NA	0.024 U	0.021 U	NA	0.02 U	NA	0.02 U	0.02 U	0.02 U	0.021 U	NA	NA	NA	0.02 UJ
4,4'-DDT	0.022 U	NA	0.024 U	0.021 U	NA	0.02 U	NA	0.02 U	0.02 U	0.02 U	0.021 U	NA	NA	NA	0.02 UJ
ALDRIN	0.011 U	NA	0.012 U	0.01 U	NA	0.01 U	NA	0.01 U	0.01 U	0.01 U	0.0105 U	NA	NA	NA	0.01 UJ
ALPHA-BHC	0.011 U	NA	0.012 U	0.01 U	NA	0.01 U	NA	0.01 U	0.01 U	0.01 U	0.0105 U	NA	NA	NA	0.01 UJ
ALPHA-CHLORDANE	0.011 U	NA	0.012 U	0.01 U	NA	0.01 U	NA	0.01 U	0.01 U	0.01 U	0.0105 U	NA	NA	NA	0.01 UJ
AROCLOR-1016	0.1 U	NA	0.1 U	0.1 U	NA	0.1 U	NA	0.1 U	0.1 U	0.1 U	0.105 U	NA	NA	NA	0.1 U
AROCLOR-1221	0.1 U	NA	0.1 U	0.1 U	NA	0.1 U	NA	0.1 U	0.1 U	0.1 U	0.105 U	NA	NA	NA	0.1 U
AROCLOR-1232	0.1 U	NA	0.1 U	0.1 U	NA	0.1 U	NA	0.1 U	0.1 U	0.1 U	0.105 U	NA	NA	NA	0.1 U
AROCLOR-1242	0.1 U	NA	0.1 U	0.1 U	NA	0.1 U	NA	0.1 U	0.1 U	0.1 U	0.105 U	NA	NA	NA	0.1 U
AROCLOR-1248	0.1 U	NA	0.1 U	0.1 U	NA	0.1 U	NA	0.1 U	0.1 U	0.1 U	0.105 U	NA	NA	NA	0.1 U
AROCLOR-1254	0.1 U	NA	0.1 U	0.1 U	NA	0.1 U	NA	0.1 U	0.1 U	0.1 U	0.105 U	NA	NA	NA	0.1 U
AROCLOR-1260	0.1 U	NA	0.1 U	0.1 U	NA	0.1 U	NA	0.1 U	0.1 U	0.1 U	0.105 U	NA	NA	NA	0.1 U
AROCLOR-1268	0.1 U	NA	0.1 U	0.1 U	NA	0.1 U	NA	0.1 U	0.1 U	0.1 U	0.105 U	NA	NA	NA	0.1 U
BETA-BHC	0.011 U	NA	0.012 U	0.01 U	NA	0.01 U	NA	0.01 U	0.01 U	0.01 U	0.0105 U	NA	NA	NA	0.01 UJ
DELTA-BHC	0.011 U	NA	0.012 U	0.01 U	NA	0.01 U	NA	0.01 U	0.01 U	0.01 U	0.0105 U	NA	NA	NA	0.01 UJ
DIELDRIN	0.022 U	NA	0.024 U	0.021 U	NA	0.02 U	NA	0.02 U	0.02 U	0.02 U	0.021 U	NA	NA	NA	0.02 UJ
ENDOSULFAN I	0.011 U	NA	0.012 U	0.01 U	NA	0.01 U	NA	0.01 U	0.01 U	0.01 U	0.0105 U	NA	NA	NA	0.01 UJ
ENDOSULFAN II	0.022 U	NA	0.024 U	0.021 U	NA	0.02 U	NA	0.02 U	0.02 U	0.02 U	0.021 U	NA	NA	NA	0.02 UJ
ENDOSULFAN SULFATE	0.022 U	NA	0.024 U	0.021 U	NA	0.02 U	NA	0.02 U	0.02 U	0.02 U	0.021 U	NA	NA	NA	0.02 UJ
ENDRIN	0.022 U	NA	0.024 U	0.021 U	NA	0.02 U	NA	0.02 U	0.02 U	0.02 U	0.021 U	NA	NA	NA	0.02 UJ
ENDRIN ALDEHYDE	0.022 U	NA	0.024 U	0.021 U	NA	0.02 U	NA	0.02 U	0.02 U	0.02 U	0.021 U	NA	NA	NA	0.02 UJ
ENDRIN KETONE	0.022 U	NA	0.024 U	0.021 U	NA	0.02 U	NA	0.02 U	0.02 U	0.02 U	0.021 U	NA	NA	NA	0.02 UJ
GAMMA-BHC (LINDANE)	0.011 U	NA	0.012 U	0.01 U	NA	0.01 U	NA	0.01 U	0.01 U	0.01 U	0.0105 U	NA	NA	NA	0.01 UJ
GAMMA-CHLORDANE	0.011 U	NA	0.012 U	0.01 U	NA	0.01 U	NA	0.01 U	0.01 U	0.01 U	0.0105 U	NA	NA	NA	0.01 UJ
HEPTACHLOR	0.011 U	NA	0.012 U	0.01 U	NA	0.01 U	NA	0.01 U	0.01 U	0.01 U	0.0105 U	NA	NA	NA	0.01 UJ
HEPTACHLOR EPOXIDE	0.011 U	NA	0.012 U	0.01 U	NA	0.01 U	NA	0.01 U	0.01 U	0.01 U	0.0105 U	NA	NA	NA	0.01 UJ
METHOXYCHLOR	0.11 U	NA	0.12 U	0.1 U	NA	0.1 U	NA	0.1 U	0.1 U	0.1 U	0.105 U	NA	NA	NA	0.1 UJ
TOTAL AROCLOR	0.1 U	NA	0.1 U	0.1 U	NA	0.1 U	NA	0.1 U	0.1 U	0.1 U	0.1 U	NA	NA	NA	0.1 U
TOTAL DDD/DDE/DDT	0.022 U	NA	0.024 U	0.021 U	NA	0.02 U	NA	0.02 U	0.02 U	0.02 U	0.021 U	NA	NA	NA	0.02 UJ
TOXAPHENE	0.22 U	NA	0.24 U	0.21 U	NA	0.2 U	NA	0.2 U	0.2 U	0.2 U	0.21 U	NA	NA	NA	0.2 UJ
EXPLOSIVES (UG/L)															
1,2-PROPYLENE GLYCOL DINITRATE	NA	0.1 U	NA	NA	0.1 U	NA	0.1 U	NA	NA	NA	NA	NA	NA	NA	NA

SHADED - DETECTED
U-NOT DETECTED; J-QUANTITATION APPROXIMATE; R-REJECTED; NA-NOT ANALYZED

SAMPLE ID	DA-MW103B-52308	DA-MW-103B-070110	DA-MW103S-52608	DA-MW104B-52008	DA-MW104B-061810	DA-MW105B-52008	DA-MW-105B-062810	DA-MW106B-52108	DA-MW106S-52208	DA-MW107B-6408	DA-MW108B-6308-AVG	DA-MW109-1924	DA-MW109-3035	DA-MW109-3641	DA-MW109B-6208
LOCATION ID	DA-MW103B		DA-MW103S	DA-MW104B		DA-MW105B		DA-MW106B		DA-MW107B	DA-MW108B	DA-MW109B			
SAMPLE DATE	05/23/08	07/01/10	05/26/08	05/20/08	06/18/10	05/20/08	06/28/10	05/21/08	05/22/08	06/04/08	06/03/08	05/08/08	05/08/08	05/08/08	06/02/08
SCREEN TOP DEPTH	20.0	20.0	14.5	19.0	19.0	18.0	18.0	20.0	9.0	15.0	15.0	15.0	15.0	15.0	15.0
SCREEN BOTTOM DEPTH	50.0	50.0	19.5	42.0	42.0	48.0	48.0	50.0	19.0	45.0	45.0	45.0	45.0	45.0	45.0
WELL DEPTH	50	50	19.5	42	42	48	48	50	20	45	45	45	45	45	45
SACODE	NORMAL	NORMAL	NORMAL	NORMAL	NORMAL	NORMAL	NORMAL	NORMAL	NORMAL	NORMAL	AVG	NORMAL	NORMAL	NORMAL	NORMAL
QC TYPE	NM	NM	NM	NM	NM	NM	NM	NM	NM	NM	NM	NM	NM	NM	NM
METALS (UG/L)															
ALUMINUM	102 J	NA	564000	784	NA	193 J	NA	1210	336	376	539	NA	NA	NA	129 UJ
ANTIMONY	1.3 UJ	NA	49.4 UJ	0.89 UJ	NA	0.78 U	NA	0.78 U	0.88 UJ	1.5 UJ	1.2 UJ	NA	NA	NA	0.78 U
ARSENIC	1.69 U	NA	503 J	1.69 U	NA	3.9 J	NA	8 J	7.7 J	6.4 J	4.3 J	NA	NA	NA	9.1
BARIUM	3.4 J	NA	1390	5.3	NA	5 J	NA	51.2	9.6	23.8 J	20.8 J	NA	NA	NA	10.5 J
BERYLLIUM	0.13 U	NA	17.8 J	0.13 U	NA	0.13 U	NA	0.13 U	0.13 U	0.21 UJ	0.13 U	NA	NA	NA	0.13 U
CADMIUM	0.04 U	NA	0.4 U	0.04 U	NA	0.04 U	NA	0.15 UJ	0.04 U	0.04 U	0.055 UJ	NA	NA	NA	0.6 UJ
CALCIUM	52700	NA	226000	48100	NA	46000	NA	46800	20300	45300	53300	NA	NA	NA	45800
CHROMIUM	1.1 UJ	NA	868	3.1 UJ	NA	1.2 UJ	NA	9.9 J	1.1 UJ	1.6 UJ	3.4 J	NA	NA	NA	2.4 J
COBALT	2.4 UJ	NA	637	1.7 UJ	NA	1.9 UJ	NA	3.6 J	7.7 J	0.66 UJ	0.925 UJ	NA	NA	NA	1.1 UJ
COPPER	0.75 UJ	NA	1440	0.75 UJ	NA	0.75 UJ	NA	10.4 J	0.75 UJ	0.75 U	7.7 UJ	NA	NA	NA	4.6 UJ
IRON	5650	NA	1210000	6740	NA	937	NA	9420	3120	7600	12600	15000	17200	15300	5760
LEAD	0.97 UJ	NA	1890	0.97 UJ	NA	1.3 J	NA	1.4 J	0.97 UJ	0.97 U	1.75 J	NA	NA	NA	1.2 J
MAGNESIUM	7010	NA	195000	10300	NA	11700	NA	14400	10500	13200	13800	NA	NA	NA	13000
MANGANESE	2010	NA	13800	1750	NA	2550	NA	448	535	351	1470	NA	NA	NA	1700
MERCURY	0.03 U	NA	1.9	0.03 U	NA	0.03 U	NA	0.03 U	0.03 U	0.03 U	0.03 U	NA	NA	NA	0.03 U
MOLYBDENUM	0.65 UJ	NA	20.3 J	0.82 UJ	NA	0.74 UJ	NA	2.6 J	0.3 U	0.69 UJ	3.1 J	NA	NA	NA	3.8 J
NICKEL	0.7 J	NA	1160	3 J	NA	0.84 J	NA	5.9 J	8.1 J	2 UJ	2.05 UJ	NA	NA	NA	3.7 J
POTASSIUM	3600	NA	41800	1250	NA	654 UJ	NA	1280	2040	722 J	3290	NA	NA	NA	1060
SELENIUM	0.96 U	NA	13.8 J	0.96 U	NA	0.96 U	NA	0.96 U	0.96 U	0.96 U	0.96 U	NA	NA	NA	0.96 U
SILVER	0.85 UJ	NA	2.9 UJ	0.59 UJ	NA	0.59 UJ	NA	0.54 UJ	0.52 UJ	0.29 U	0.392 J	NA	NA	NA	0.29 U
SODIUM	15400	NA	16800	12900	NA	13300	NA	8940	12000	9400	14000	NA	NA	NA	14400
THALLIUM	1.64 U	NA	16.4 U	1.64 U	NA	1.64 U	NA	1.64 U	1.64 U	1.64 U	1.64 U	NA	NA	NA	1.64 U
VANADIUM	0.43 UJ	NA	832	1.2 UJ	NA	0.38 U	NA	2.1 J	0.85 UJ	0.67 UJ	1.15 UJ	NA	NA	NA	0.38 U
ZINC	16.9 J	NA	3990	23.8 J	NA	9.5 UJ	NA	28.5	7.9 UJ	6.2 UJ	13.4 J	NA	NA	NA	15.7 J
DISSOLVED METALS (UG/L)															
ALUMINUM	19.7 UJ	NA	5900	33.8 UJ	NA	24.5 UJ	NA	28.2 UJ	21.5 UJ	42.2 UJ	117 UJ	NA	NA	NA	14.6 U
ANTIMONY	1.2 UJ	NA	1.8 UJ	1.4 UJ	NA	0.78 UJ	NA	0.78 U	0.78 U	1.4 UJ	1.45 UJ	NA	NA	NA	0.78 U
ARSENIC	1.69 U	NA	20.2	2 J	NA	3.3 J	NA	4.5 J	5.8 J	6.1 J	5.25 J	NA	NA	NA	9.3
BARIUM	3.1 J	NA	90.7	2.3 UJ	NA	0.83 UJ	NA	47.4	7.9	21.6	18.2	NA	NA	NA	10.9
BERYLLIUM	0.13 U	NA	0.13 U	0.13 U	NA	0.13 U	NA	0.13 U	0.13 U	0.13 U	0.13 U	NA	NA	NA	0.13 U
CADMIUM	0.04 U	NA	0.04 U	0.04 U	NA	0.04 U	NA	0.11 UJ	0.04 U	0.04 U	0.04 U	NA	NA	NA	0.05 UJ
CALCIUM	53400	NA	143000	48400	NA	45100	NA	45400	20700	44600	51800	NA	NA	NA	46700
CHROMIUM	1 UJ	NA	8.6 UJ	0.95 UJ	NA	0.98 UJ	NA	0.72 UJ	0.6 UJ	0.41 U	1.15 UJ	NA	NA	NA	0.53 UJ
COBALT	2.3 UJ	NA	6.8 J	1.1 UJ	NA	0.58 UJ	NA	0.79 UJ	7 J	0.48 UJ	0.725 UJ	NA	NA	NA	1.2 UJ
COPPER	0.75 UJ	NA	19 J	0.75 UJ	NA	0.75 UJ	NA	0.75 UJ	0.75 UJ	0.75 U	0.75 U	NA	NA	NA	3.4 UJ
IRON	4360	NA	38200	1960	NA	18.3 UJ	NA	4340	2420	4730	8440	10400	6050	8070	2800
LEAD	0.97 UJ	NA	19.9	0.97 UJ	NA	0.97 UJ	NA	0.97 UJ	0.97 UJ	0.97 U	0.732 J	NA	NA	NA	0.97 U

SHADED - DETECTED
U-NOT DETECTED; J-QUANTITATION APPROXIMATE; R-REJECTED; NA-NOT ANALYZED

SAMPLE ID	DA-MW103B-52308	DA-MW-103B-070110	DA-MW103S-52608	DA-MW104B-52008	DA-MW104B-061810	DA-MW105B-52008	DA-MW-105B-062810	DA-MW106B-52108	DA-MW106S-52208	DA-MW107B-6408	DA-MW108B-6308-AVG	DA-MW109-1924	DA-MW109-3035	DA-MW109-3641	DA-MW109B-6208
LOCATION ID	DA-MW103B		DA-MW103S	DA-MW104B		DA-MW105B		DA-MW106B		DA-MW107B	DA-MW108B	DA-MW109B			
SAMPLE DATE	05/23/08	07/01/10	05/26/08	05/20/08	06/18/10	05/20/08	06/28/10	05/21/08	05/22/08	06/04/08	06/03/08	05/08/08	05/08/08	05/08/08	06/02/08
SCREEN TOP DEPTH	20.0	20.0	14.5	19.0	19.0	18.0	18.0	20.0	9.0	15.0	15.0	15.0	15.0	15.0	15.0
SCREEN BOTTOM DEPTH	50.0	50.0	19.5	42.0	42.0	48.0	48.0	50.0	19.0	45.0	45.0	45.0	45.0	45.0	45.0
WELL DEPTH	50	50	19.5	42	42	48	48	50	20	45	45	45	45	45	45
SACODE	NORMAL	NORMAL	NORMAL	NORMAL	NORMAL	NORMAL	NORMAL	NORMAL	NORMAL	NORMAL	AVG	NORMAL	NORMAL	NORMAL	NORMAL
QC TYPE	NM	NM	NM	NM	NM	NM	NM	NM	NM	NM	NM	NM	NM	NM	NM
MAGNESIUM	7100	NA	14800	10300	NA	11500	NA	14100	10600	12900	13400	NA	NA	NA	13400
MANGANESE	2040	NA	1910	1750	NA	2140	NA	384	519	334	1440	NA	NA	NA	1740
MERCURY	0.03 U	NA	0.03 U	0.03 U	NA	0.03 U	NA	0.03 U	0.03 U	0.03 U	0.03 U	NA	NA	NA	0.03 U
MOLYBDENUM	0.8 UJ	NA	2.3 J	0.61 UJ	NA	0.57 UJ	NA	1.1 UJ	0.3 U	0.43 UJ	2.25 J	NA	NA	NA	2 J
NICKEL	0.42 U	NA	10.6 J	1.3 J	NA	0.42 U	NA	0.46 J	7.5 J	0.89 UJ	0.675 UJ	NA	NA	NA	0.88 UJ
POTASSIUM	3710	NA	24300	1210	NA	650 UJ	NA	1320	2010	685 J	2650	NA	NA	NA	706 J
SELENIUM	0.96 U	NA	0.96 U	0.96 U	NA	0.96 U	NA	0.96 U	1.3 J	0.96 U	0.96 U	NA	NA	NA	0.96 U
SILVER	0.73 UJ	NA	1.8 UJ	0.29 UJ	NA	0.59 UJ	NA	0.3 UJ	0.41 UJ	0.29 U	0.238 J	NA	NA	NA	0.29 U
SODIUM	15600	NA	17600	13100	NA	13100	NA	8980	12200	9210	13400	NA	NA	NA	14100
THALLIUM	1.64 U	NA	1.64 U	1.64 U	NA	1.64 U	NA	1.64 U	1.64 U	1.64 U	1.64 U	NA	NA	NA	1.64 U
VANADIUM	0.38 U	NA	7.5 J	0.38 U	NA	0.38 U	NA	0.44 UJ	0.38 U	0.38 U	0.465 UJ	NA	NA	NA	0.38 U
ZINC	8.5 UJ	NA	41	16.3 J	NA	6.1 UJ	NA	6.6 UJ	7.3 UJ	4.3 UJ	5.15 UJ	NA	NA	NA	7.8 UJ
MISCELLANEOUS PARAMETERS (MG/L)															
AMMONIA-N	0.06 J	0.05 U	1.8	0.1 U	NA	0.1 U	0.05 U	0.1 U	0.042 J	0.1 U	0.1 U	NA	NA	NA	0.04 J
CHLORIDE	NA	NA	NA	NA	NA	NA	NA	NA	NA	NA	NA	NA	NA	NA	NA
NITRATE-N	0.81	0.07	0.05 U	0.3	NA	0.048 J	0.099	0.05 U	4.9	0.05 U	0.05 U	NA	NA	NA	0.05 U
NITRITE-N	0.05 U	0.025 U	0.05 U	0.037 J	NA	0.05 U	0.025 U	0.05 U	0.05 U	0.05 U	0.05 U	NA	NA	NA	0.05 U
ORTHOPHOSPHATE-P	0.05 U	0.05 U	0.032 J	0.061	NA	0.023 J	0.05 U	0.061	0.05 U	0.049 J	0.0245 J	NA	NA	NA	0.025 J
SULFATE	11	8.1	46	19	NA	28	28	41	34	44	29	NA	NA	NA	36
SULFIDE	1 U	0.8 U	1 U	1.4	NA	1 U	0.7 J	1.3	1 U	1 U	1 U	NA	NA	NA	1.2
TOTAL ORGANIC CARBON	1.7	1.1	14	0.94 J	NA	0.96 J	0.76 J	0.83 J	0.64 J	0.36 J	1.8	NA	NA	NA	1.1
MISCELLANEOUS PARAMETERS (UG/L)															
CYANIDE	NA	5 U	NA	NA	NA	NA	NA	NA	NA	NA	NA	NA	NA	NA	NA
METHANE	49	NA	150	9.8 J	NA	14	NA	10 U	1.8 J	10 U	1.35 J	NA	NA	NA	13
FIELD (UG/L)															
FERROUS IRON	2450	NA	2330	1730	NA	0 U	NA	3800	NA	3780	3220	NA	NA	NA	2370
PETROLEUM HYDROCARBONS (UG/L)															
EXTRACTABLE TPH (C09-C36)	83 U	NA	220	69 J	NA	84 U	NA	75 U	75 U	75 U	79.5 J	NA	NA	NA	52 J
GASOLINE RANGE ORGANICS	10 U	NA	10 U	25 U	NA	16 U	NA	10 U	10 U	10 U	10 U	NA	NA	NA	10 U

SHADED - DETECTED
U-NOT DETECTED; J-QUANTITATION APPROXIMATE; R-REJECTED; NA-NOT ANALYZED

SAMPLE ID	DA-MW110B-51908	DA-MW111B-51608	DA-MW112B-51608-AVG	DA-MW112S-51908	DA-MW113B-51608	DA-MW114-2934	DA-MW114-3439	DA-MW114-5261	DA-MW114B-51608	DA-MW115-1924	DA-MW115-2631	DA-MW115B-51508	DA-MW116B-51508	DA-GW-MW116B-D1-0810	DA-GW-MW116B-D2-0810
LOCATION ID	DA-MW110B	DA-MW111B	DA-MW112B	DA-MW112S	DA-MW113B	DA-MW114B				DA-MW115B			DA-MW116B	DA-MW116B-D1	DA-MW116B-D2
SAMPLE DATE	05/19/08	05/16/08	05/16/08	05/19/08	05/16/08	05/05/08	05/05/08	05/06/08	05/16/08	05/07/08	05/07/08	05/15/08	05/15/08	08/06/10	08/06/10
SCREEN TOP DEPTH	19.0	14.0	18.0	10.0	14.0	10.0	10.0	10.0	10.0	9.5	9.5	9.5	10.0	14.0	29.0
SCREEN BOTTOM DEPTH	49.0	44.0	47.0	20.0	46.0	61.0	61.0	61.0	61.0	48.0	48.0	48.0	40.0	29.0	39.0
WELL DEPTH	49	44	47	20	46	61	61	61	61	48	48	48	40	29	39
SACODE	NORMAL	NORMAL	AVG	NORMAL	NORMAL	NORMAL	NORMAL	NORMAL	NORMAL	NORMAL	NORMAL	NORMAL	NORMAL	NORMAL	NORMAL
QC TYPE	NM	NM	NM	NM	NM	NM	NM	NM	NM	NM	NM	NM	NM	NM	NM
VOLATILES (UG/L)															
1,1,1,2-TETRACHLOROETHANE	1 UJ	1 U	1 UJ	1 UJ	1 UJ	1 UJ	1 UJ	1 UJ	1 U	1 U	1 U	1 U	1 U	0.5 U	0.5 U
1,1,1-TRICHLOROETHANE	1 UJ	1 U	1 UJ	1 UJ	1 UJ	1 UJ	1 UJ	1 UJ	1 U	1 U	1 U	1 U	1 U	0.5 U	0.5 U
1,1,2,2-TETRACHLOROETHANE	1 UJ	1 U	1 UJ	1 UJ	1 UJ	1 UJ	1 UJ	1 UJ	1 U	1 U	1 U	1 U	1 U	0.5 U	0.5 U
1,1,2-TRICHLOROETHANE	1 UJ	1 U	1 UJ	1 UJ	1 UJ	1 UJ	1 UJ	1 UJ	1 U	1 U	1 U	1 U	1 U	0.5 U	0.5 U
1,1-DICHLOROETHANE	0.7 J	1 U	1 J	1 UJ	1 UJ	1 J	1 UJ	1 UJ	0.4 J	0.7 J	0.6 J	0.8 J	1 U	0.5 U	0.5 U
1,1-DICHLOROETHENE	1 UJ	1 U	1 UJ	1 UJ	1 UJ	1 UJ	1 UJ	1 UJ	1 U	1 U	1 U	1 U	1 U	0.5 U	0.5 U
1,1-DICHLOROPROPENE	1 UJ	1 U	1 UJ	1 UJ	1 UJ	1 UJ	1 UJ	1 UJ	1 U	1 U	1 U	1 U	1 U	0.5 U	0.5 U
1,2,3-TRICHLOROBENZENE	1 UJ	1 U	1 UJ	1 UJ	1 UJ	1 UJ	1 UJ	1 UJ	1 U	1 U	1 U	1 U	1 U	0.5 U	0.5 U
1,2,3-TRICHLOROPROPANE	1 UJ	1 U	1 UJ	1 UJ	1 UJ	1 UJ	1 UJ	1 UJ	1 U	1 U	1 U	1 U	1 U	0.5 U	0.5 U
1,2,4-TRICHLOROBENZENE	1 UJ	1 U	1 UJ	1 UJ	1 UJ	1 UJ	1 UJ	1 UJ	1 U	1 U	1 U	1 U	1 U	0.5 U	0.5 U
1,2,4-TRIMETHYLBENZENE	1 UJ	1 U	1 UJ	1 UJ	1 UJ	1 UJ	1 UJ	1 UJ	1 U	1 U	1 U	1 U	1 U	0.5 U	0.5 U
1,2-DIBROMO-3-CHLOROPROPANE	1 UJ	1 U	1 UJ	1 UJ	1 UJ	1 UJ	1 UJ	1 UJ	1 U	1 U	1 U	1 U	1 U	0.75 U	0.75 U
1,2-DIBROMOETHANE	1 UJ	1 U	1 UJ	1 UJ	1 UJ	1 UJ	1 UJ	1 UJ	1 U	1 U	1 U	1 U	1 U	0.5 U	0.5 U
1,2-DICHLOROBENZENE	1 UJ	1 U	1 UJ	1 UJ	1 UJ	1 UJ	1 UJ	1 UJ	1 U	1 U	1 U	1 U	1 U	0.5 U	0.5 U
1,2-DICHLOROETHANE	1 UJ	1 U	1 UJ	1 UJ	1 UJ	1 UJ	1 UJ	1 UJ	1 U	1 U	1 U	1 U	1 U	0.5 U	0.5 U
1,2-DICHLOROPROPANE	1 UJ	1 U	1 UJ	1 UJ	1 UJ	1 UJ	1 UJ	1 UJ	1 U	1 U	1 U	1 U	1 U	0.5 U	0.5 U
1,3,5-TRIMETHYLBENZENE	1 UJ	1 U	1 UJ	1 UJ	1 UJ	1 UJ	1 UJ	1 UJ	1 U	1 U	1 U	1 U	1 U	0.5 U	0.5 U
1,3-DICHLOROBENZENE	1 UJ	1 U	1 UJ	1 UJ	1 UJ	1 UJ	1 UJ	1 UJ	1 U	1 U	1 U	1 U	1 U	0.5 U	0.5 U
1,3-DICHLOROPROPANE	1 UJ	1 U	1 UJ	1 UJ	1 UJ	1 UJ	1 UJ	1 UJ	1 U	1 U	1 U	1 U	1 U	0.5 U	0.5 U
1,4-DICHLOROBENZENE	1 UJ	1 U	1 UJ	1 UJ	1 UJ	1 UJ	1 UJ	1 UJ	1 U	1 U	1 U	1 U	1 U	0.5 U	0.5 U
2,2-DICHLOROPROPANE	1 UJ	1 U	1 UJ	1 UJ	1 UJ	1 UJ	1 UJ	1 UJ	1 U	1 U	1 U	1 U	1 U	0.5 U	0.5 U
2-BUTANONE	5 UJ	5 U	5 UJ	5 UJ	5 UJ	5 UJ	5 UJ	5 UJ	5 U	5 U	5 U	5 U	5 U	2.5 U	2.5 U
2-CHLOROTOLUENE	1 UJ	1 U	1 UJ	1 UJ	1 UJ	1 UJ	1 UJ	1 UJ	1 U	1 U	1 U	1 U	1 U	0.5 U	0.5 U
2-HEXANONE	5 UJ	5 U	5 UJ	5 UJ	5 UJ	5 UJ	5 UJ	5 UJ	5 U	5 U	5 U	5 U	5 U	2.5 U	2.5 U
4-CHLOROTOLUENE	1 UJ	1 U	1 UJ	1 UJ	1 UJ	1 UJ	1 UJ	1 UJ	1 U	1 U	1 U	1 U	1 U	0.5 U	0.5 U
4-ISOPROPYLTOLUENE	1 UJ	1 U	1 UJ	1 UJ	1 UJ	1 UJ	1 UJ	1 UJ	1 U	1 U	1 U	1 U	1 U	0.5 U	0.5 U
4-METHYL-2-PENTANONE	5 UJ	5 U	5 UJ	5 UJ	5 UJ	5 UJ	5 UJ	5 UJ	5 U	5 U	5 U	5 U	5 U	2.5 U	2.5 U
ACETONE	13 J	5 U	5 UJ	5 UJ	5 UJ	5 UJ	4 J	5 J	5 U	8	5 J	5 U	5 U	2.5 U	2.5 U
BENZENE	1 UJ	1 U	1 UJ	1 UJ	1 UJ	1 UJ	1 UJ	1 UJ	1 U	1 U	1 U	1 U	1 U	0.5 U	0.5 U
BROMOBENZENE	1 UJ	1 U	1 UJ	1 UJ	1 UJ	1 UJ	1 UJ	1 UJ	1 U	1 U	1 U	1 U	1 U	0.5 U	0.5 U
BROMOCHLOROMETHANE	1 UJ	1 U	1 UJ	1 UJ	1 UJ	1 UJ	1 UJ	1 UJ	1 U	1 U	1 U	1 U	1 U	0.5 U	0.5 U
BROMODICHLOROMETHANE	1 UJ	1 U	1 UJ	1 UJ	1 UJ	1 UJ	1 UJ	1 UJ	1 U	1 U	1 U	1 U	1 U	0.5 U	0.5 U
BROMOFORM	1 UJ	1 U	1 UJ	1 UJ	1 UJ	1 UJ	1 UJ	1 UJ	1 U	1 U	1 U	1 U	1 UJ	0.5 U	0.5 U

SAMPLE ID	DA-MW110B-51908	DA-MW111B-51608	DA-MW112B-51608-AVG	DA-MW112S-51908	DA-MW113B-51608	DA-MW114-2934	DA-MW114-3439	DA-MW114-5261	DA-MW114B-51608	DA-MW115-1924	DA-MW115-2631	DA-MW115B-51508	DA-MW116B-51508	DA-GW-MW116B-D1-0810	DA-GW-MW116B-D2-0810
LOCATION ID	DA-MW110B	DA-MW111B	DA-MW112B	DA-MW112S	DA-MW113B	DA-MW114B				DA-MW115B			DA-MW116B	DA-MW116B-D1	DA-MW116B-D2
SAMPLE DATE	05/19/08	05/16/08	05/16/08	05/19/08	05/16/08	05/05/08	05/05/08	05/06/08	05/16/08	05/07/08	05/07/08	05/15/08	05/15/08	08/06/10	08/06/10
SCREEN TOP DEPTH	19.0	14.0	18.0	10.0	14.0	10.0	10.0	10.0	10.0	9.5	9.5	9.5	10.0	14.0	29.0
SCREEN BOTTOM DEPTH	49.0	44.0	47.0	20.0	46.0	61.0	61.0	61.0	61.0	48.0	48.0	48.0	40.0	29.0	39.0
WELL DEPTH	49	44	47	20	46	61	61	61	61	48	48	48	40	29	39
SACODE	NORMAL	NORMAL	AVG	NORMAL	NORMAL	NORMAL	NORMAL	NORMAL	NORMAL	NORMAL	NORMAL	NORMAL	NORMAL	NORMAL	NORMAL
QC TYPE	NM	NM	NM	NM	NM	NM	NM	NM	NM	NM	NM	NM	NM	NM	NM
BROMOMETHANE	2 UJ	2 U	2 UJ	2 UJ	2 UJ	2 UJ	2 UJ	2 UJ	2 U	2 U	2 U	2 U	2 U	1 U	1 U
BTEX	1.1 UJ	1.1 U	1.1 UJ	1.1 UJ	1.1 UJ	14 J	5 J	6 J	1.1 U	0.6 J	2	1.1 U	1.1 U	0.562 U	0.562 U
CARBON DISULFIDE	1 UJ	1 U	1 UJ	1 UJ	1 UJ	1 UJ	1 UJ	1 UJ	1 U	1 U	1 U	1 U	1 U	0.5 U	0.5 U
CARBON TETRACHLORIDE	1 UJ	1 U	1 UJ	1 UJ	1 UJ	1 UJ	1 UJ	1 UJ	1 U	1 U	1 U	1 U	1 UJ	0.5 U	0.5 U
CHLOROBENZENE	1 UJ	1 U	1 UJ	1 UJ	1 UJ	1 UJ	1 UJ	1 UJ	1 U	1 U	1 U	1 U	1 U	0.5 U	0.5 U
CHLORODIBROMOMETHANE	1 UJ	1 U	1 UJ	1 UJ	1 UJ	1 UJ	1 UJ	1 UJ	1 U	1 U	1 U	1 U	1 U	0.5 U	0.5 U
CHLOROETHANE	2 UJ	2 U	2 UJ	2 UJ	2 UJ	2 UJ	2 UJ	2 UJ	2 U	2 UJ	2 UJ	2 U	2 UJ	1 U	1 U
CHLOROFORM	1 UJ	1 U	1 UJ	1 UJ	1 UJ	1 UJ	1 UJ	1 UJ	1 U	1 U	1 U	1 U	1 U	0.5 U	0.5 U
CHLOROMETHANE	2 UJ	2 U	2 UJ	2 UJ	2 UJ	2 UJ	2 UJ	2 UJ	2 U	2 U	2 U	2 U	2 U	1 U	1 U
CIS-1,2-DICHLOROETHENE	2 J	1 U	1 UJ	1 UJ	1 UJ	1 UJ	1 UJ	1 UJ	1 U	1 U	1 U	1 U	1 U	0.5 U	0.5 U
CIS-1,3-DICHLOROPROPENE	1 UJ	1 U	1 UJ	1 UJ	1 UJ	1 UJ	1 UJ	1 UJ	1 U	1 U	1 U	1 U	1 U	0.5 U	0.5 U
DIBROMOMETHANE	1 UJ	1 U	1 UJ	1 UJ	1 UJ	1 UJ	1 UJ	1 UJ	1 U	1 U	1 U	1 U	1 U	0.5 U	0.5 U
DICHLORODIFLUOROMETHANE	2 UJ	2 U	2 UJ	2 UJ	2 UJ	2 UJ	2 UJ	2 UJ	2 U	2 U	2 U	2 U	2 U	1 U	1 U
ETHYLBENZENE	1 UJ	1 U	1 UJ	1 UJ	1 UJ	1 UJ	1 UJ	1 UJ	1 U	1 U	1 U	1 U	1 U	0.5 U	0.5 U
HEXACHLOROBUTADIENE	1 UJ	1 U	1 UJ	1 UJ	1 UJ	1 UJ	1 UJ	1 UJ	1 U	1 U	1 U	1 U	1 U	0.5 U	0.5 U
ISOPROPYLBENZENE	1 UJ	1 U	1 UJ	1 UJ	1 UJ	1 UJ	1 UJ	1 UJ	1 U	1 U	1 U	1 U	1 U	0.5 U	0.5 U
M+P-XYLENES	2 UJ	2 U	2 UJ	2 UJ	2 UJ	2 UJ	2 UJ	2 UJ	2 U	2 U	2 U	2 U	2 U	1 U	1 U
METHYL TERT-BUTYL ETHER	1 UJ	1 U	1 UJ	1 UJ	1 UJ	1 UJ	1 UJ	1 UJ	1 U	1 U	1 U	1 U	1 U	0.5 U	0.5 U
METHYLENE CHLORIDE	5 UJ	5 U	5 UJ	5 UJ	5 UJ	5 UJ	5 UJ	5 UJ	5 U	5 U	5 U	5 U	5 U	2.5 U	2.5 U
N-BUTYLBENZENE	1 UJ	1 U	1 UJ	1 UJ	1 UJ	1 UJ	1 UJ	1 UJ	1 U	1 U	1 U	1 U	1 U	0.5 U	0.5 U
N-PROPYLBENZENE	1 UJ	1 U	1 UJ	1 UJ	1 UJ	1 UJ	1 UJ	1 UJ	1 U	1 U	1 U	1 U	1 U	0.5 U	0.5 U
O-XYLENE	1 UJ	1 U	1 UJ	1 UJ	1 UJ	1 UJ	1 UJ	1 UJ	1 U	1 U	1 U	1 U	1 U	0.5 U	0.5 U
SEC-BUTYLBENZENE	1 UJ	1 U	1 UJ	1 UJ	1 UJ	1 UJ	1 UJ	1 UJ	1 U	1 U	1 U	1 U	1 U	0.5 U	0.5 U
STYRENE	1 UJ	1 U	1 UJ	1 UJ	1 UJ	1 UJ	1 UJ	1 UJ	1 U	1 U	1 U	1 U	1 U	0.5 U	0.5 U
TERT-BUTYLBENZENE	1 UJ	1 U	1 UJ	1 UJ	1 UJ	1 UJ	1 UJ	1 UJ	1 U	1 U	1 U	1 U	1 U	0.5 U	0.5 U
TETRACHLOROETHENE	7 J	1 U	1 UJ	0.5 J	0.6 J	1 UJ	1 UJ	1 UJ	1 U	1 U	0.5 J	1 U	1 U	0.5 U	0.5 U
TOLUENE	1 UJ	1 U	1 UJ	1 UJ	1 UJ	14 J	5 J	6 J	1 U	0.6 J	2	1 U	1 U	0.5 U	0.5 U
TOTAL 1,2-DICHLOROETHENE	2 J	1 U	1 UJ	1 UJ	1 UJ	1 UJ	1 UJ	1 UJ	1 U	1 U	1 U	1 U	1 U	0.5 U	0.5 U
TOTAL CHLORINATED ETHENES	12 J	1.2 U	1.2 UJ	0.5 J	0.6 J	1.2 UJ	1.2 UJ	1.2 UJ	1.2 U	1.2 U	0.5 J	1.2 U	1.2 U	0.6 U	0.6 U
TOTAL CHLORINATED VOCS	12.7 J	1.3 U	1 J	0.5 J	0.6 J	1 J	1.3 UJ	1.3 UJ	0.4 J	0.7 J	1.1 J	0.8 J	1.3 UJ	0.602 U	0.602 U
TOTAL XYLENES	1.5 UJ	1.5 U	1.5 UJ	1.5 UJ	1.5 UJ	1.5 UJ	1.5 UJ	1.5 UJ	1.5 U	1.5 U	1.5 U	1.5 U	1.5 U	0.75 U	0.75 U
TRANS-1,2-DICHLOROETHENE	1 UJ	1 U	1 UJ	1 UJ	1 UJ	1 UJ	1 UJ	1 UJ	1 U	1 U	1 U	1 U	1 U	0.5 U	0.5 U
TRANS-1,3-DICHLOROPROPENE	1 UJ	1 U	1 UJ	1 UJ	1 UJ	1 UJ	1 UJ	1 UJ	1 U	1 U	1 U	1 U	1 U	0.5 U	0.5 U
TRICHLOROETHENE	3 J	1 U	1 UJ	1 UJ	1 UJ	1 UJ	1 UJ	1 UJ	1 U	1 U	1 U	1 U	1 U	0.5 U	0.5 U
TRICHLOROFLUOROMETHANE	2 UJ	2 U	2 UJ	2 UJ	2 UJ	2 UJ	2 UJ	2 UJ	2 U	2 U	2 U	2 U	2 U	1 U	1 U
VINYL CHLORIDE	2 UJ	2 U	2 UJ	2 UJ	2 UJ	2 UJ	2 UJ	2 UJ	2 U	2 U	2 U	2 U	2 U	1 U	1 U

SHADED - DETECTED
U-NOT DETECTED; J-QUANTITATION APPROXIMATE; R-REJECTED; NA-NOT ANALYZED

SAMPLE ID	DA-MW110B-51908	DA-MW111B-51608	DA-MW112B-51608-AVG	DA-MW112S-51908	DA-MW113B-51608	DA-MW114-2934	DA-MW114-3439	DA-MW114-5261	DA-MW114B-51608	DA-MW115-1924	DA-MW115-2631	DA-MW115B-51508	DA-MW116B-51508	DA-GW-MW116B-D1-0810	DA-GW-MW116B-D2-0810
LOCATION ID	DA-MW110B	DA-MW111B	DA-MW112B	DA-MW112S	DA-MW113B	DA-MW114B				DA-MW115B			DA-MW116B	DA-MW116B-D1	DA-MW116B-D2
SAMPLE DATE	05/19/08	05/16/08	05/16/08	05/19/08	05/16/08	05/05/08	05/05/08	05/06/08	05/16/08	05/07/08	05/07/08	05/15/08	05/15/08	08/06/10	08/06/10
SCREEN TOP DEPTH	19.0	14.0	18.0	10.0	14.0	10.0	10.0	10.0	10.0	9.5	9.5	9.5	10.0	14.0	29.0
SCREEN BOTTOM DEPTH	49.0	44.0	47.0	20.0	46.0	61.0	61.0	61.0	61.0	48.0	48.0	48.0	40.0	29.0	39.0
WELL DEPTH	49	44	47	20	46	61	61	61	61	48	48	48	40	29	39
SACODE	NORMAL	NORMAL	AVG	NORMAL	NORMAL	NORMAL	NORMAL	NORMAL	NORMAL	NORMAL	NORMAL	NORMAL	NORMAL	NORMAL	NORMAL
QC TYPE	NM	NM	NM	NM	NM	NM	NM	NM	NM	NM	NM	NM	NM	NM	NM
VOLATILE GASES (UG/L)															
ETHANE	10 UJ	10 U	10 U	10 U	10 U	NA	NA	NA	10 U	NA	NA	10 U	10 U	NA	NA
ETHENE	10 UJ	10 U	10 U	10 U	10 U	NA	NA	NA	10 U	NA	NA	10 U	10 U	NA	NA
METHANE	NA	NA	NA	NA	NA	NA	NA	NA	NA	NA	NA	NA	NA	NA	NA
SEMIVOLATILES (UG/L)															
1,1-BIPHENYL	10 UJ	10 UJ	10 UJ	10 UJ	10 UJ	NA	NA	NA	10 UJ	NA	NA	10 UJ	10 UJ	NA	NA
1,2-DIPHENYLHYDRAZINE	21 UJ	20 U	20 U	20 U	20 U	NA	NA	NA	21 U	NA	NA	20 U	20 U	NA	NA
1,4-DIOXANE	NA	NA	NA	NA	NA	NA	NA	NA	NA	NA	NA	NA	NA	NA	NA
2,2'-OXYBIS(1-CHLOROPROPANE)	10 UJ	10 U	10 U	10 U	10 U	NA	NA	NA	10 U	NA	NA	10 U	10 U	NA	NA
2,4,5-TRICHLOROPHENOL	26 UJ	25 U	25 UJ	26 UR	25 U	NA	NA	NA	26 U	NA	NA	25 UR	26 UR	NA	NA
2,4,6-TRICHLOROPHENOL	10 UJ	10 U	10 UJ	10 UR	10 U	NA	NA	NA	10 U	NA	NA	10 UR	10 UR	NA	NA
2,4-DICHLOROPHENOL	10 UJ	10 U	10 UJ	10 UR	10 U	NA	NA	NA	10 U	NA	NA	10 UR	10 UR	NA	NA
2,4-DIMETHYLPHENOL	10 UJ	10 U	10 UJ	10 UR	10 U	NA	NA	NA	10 U	NA	NA	10 UR	10 UR	NA	NA
2,4-DINITROPHENOL	26 UJ	25 U	25 UJ	26 UR	25 U	NA	NA	NA	26 U	NA	NA	25 UR	26 UR	NA	NA
2,4-DINITROTOLUENE	10 UJ	10 U	10 U	10 U	10 U	NA	NA	NA	10 U	NA	NA	10 U	10 U	NA	NA
2,6-DICHLOROPHENOL	10 UJ	10 U	10 UJ	10 UR	10 U	NA	NA	NA	10 U	NA	NA	10 UR	10 UR	NA	NA
2,6-DINITROTOLUENE	10 UJ	10 U	10 U	10 U	10 U	NA	NA	NA	10 U	NA	NA	10 U	10 U	NA	NA
2-CHLORONAPHTHALENE	10 UJ	10 U	10 U	10 U	10 U	NA	NA	NA	10 U	NA	NA	10 U	10 U	NA	NA
2-CHLOROPHENOL	10 UJ	10 U	10 UJ	10 UR	10 U	NA	NA	NA	10 U	NA	NA	10 UR	10 UR	NA	NA
2-METHYLNAPHTHALENE	10 UJ	10 UJ	10 U	10 U	10 U	NA	NA	NA	10 UJ	NA	NA	10 UJ	10 UJ	NA	NA
2-METHYLPHENOL	10 UJ	10 U	10 UJ	10 UR	10 U	NA	NA	NA	10 U	NA	NA	10 UR	10 UR	NA	NA
2-NITROANILINE	26 UJ	25 U	25 U	26 U	25 U	NA	NA	NA	26 U	NA	NA	25 U	26 U	NA	NA
2-NITROPHENOL	10 UJ	10 U	10 UJ	10 UR	10 U	NA	NA	NA	10 U	NA	NA	10 UR	10 UR	NA	NA
3&4-METHYLPHENOL	10 UJ	10 U	10 UJ	10 UR	10 U	NA	NA	NA	10 U	NA	NA	10 UR	10 UR	NA	NA
3,3'-DICHLOROBENZIDINE	10 UJ	10 U	10 U	10 UJ	10 U	NA	NA	NA	10 U	NA	NA	10 U	10 U	NA	NA
3-NITROANILINE	26 UJ	25 U	25 U	26 U	25 U	NA	NA	NA	26 U	NA	NA	25 U	26 U	NA	NA
4,6-DINITRO-2-METHYLPHENOL	26 UJ	25 U	25 UJ	26 UR	25 U	NA	NA	NA	26 U	NA	NA	25 UR	26 UR	NA	NA
4-BROMOPHENYL PHENYL ETHER	10 UJ	10 U	10 U	10 U	10 U	NA	NA	NA	10 U	NA	NA	10 U	10 U	NA	NA
4-CHLORO-3-METHYLPHENOL	26 UJ	25 U	25 UJ	26 UR	25 U	NA	NA	NA	26 U	NA	NA	25 UR	26 UR	NA	NA
4-CHLOROANILINE	10 UJ	10 U	10 U	10 U	10 U	NA	NA	NA	10 U	NA	NA	10 U	10 U	NA	NA
4-CHLOROPHENYL PHENYL ETHER	10 UJ	10 U	10 U	10 U	10 U	NA	NA	NA	10 U	NA	NA	10 U	10 U	NA	NA
4-NITROANILINE	26 UJ	25 U	25 U	26 U	25 U	NA	NA	NA	26 U	NA	NA	25 U	26 U	NA	NA
4-NITROPHENOL	26 UJ	25 U	25 UJ	26 UR	25 U	NA	NA	NA	26 U	NA	NA	25 UR	26 UR	NA	NA
ACENAPHTHENE	10 UJ	10 U	10 U	10 U	10 U	NA	NA	NA	10 U	NA	NA	10 U	10 U	NA	NA
ACENAPHTHYLENE	10 UJ	10 U	10 U	10 U	10 U	NA	NA	NA	10 U	NA	NA	10 U	10 U	NA	NA
ANTHRACENE	10 UJ	10 U	10 U	10 U	10 U	NA	NA	NA	10 U	NA	NA	10 U	10 U	NA	NA
BENZIDINE	52 UR	50 UR	50 UR	51 UR	50 UR	NA	NA	NA	52 UR	NA	NA	50 UR	51 UR	NA	NA

SAMPLE ID	DA-MW110B-51908	DA-MW111B-51608	DA-MW112B-51608-AVG	DA-MW112S-51908	DA-MW113B-51608	DA-MW114-2934	DA-MW114-3439	DA-MW114-5261	DA-MW114B-51608	DA-MW115-1924	DA-MW115-2631	DA-MW115B-51508	DA-MW116B-51508	DA-GW-MW116B-D1-0810	DA-GW-MW116B-D2-0810
LOCATION ID	DA-MW110B	DA-MW111B	DA-MW112B	DA-MW112S	DA-MW113B	DA-MW114B				DA-MW115B			DA-MW116B	DA-MW116B-D1	DA-MW116B-D2
SAMPLE DATE	05/19/08	05/16/08	05/16/08	05/19/08	05/16/08	05/05/08	05/05/08	05/06/08	05/16/08	05/07/08	05/07/08	05/15/08	05/15/08	08/06/10	08/06/10
SCREEN TOP DEPTH	19.0	14.0	18.0	10.0	14.0	10.0	10.0	10.0	10.0	9.5	9.5	9.5	10.0	14.0	29.0
SCREEN BOTTOM DEPTH	49.0	44.0	47.0	20.0	46.0	61.0	61.0	61.0	61.0	48.0	48.0	48.0	40.0	29.0	39.0
WELL DEPTH	49	44	47	20	46	61	61	61	61	48	48	48	40	29	39
SACODE	NORMAL	NORMAL	AVG	NORMAL	NORMAL	NORMAL	NORMAL	NORMAL	NORMAL	NORMAL	NORMAL	NORMAL	NORMAL	NORMAL	NORMAL
QC TYPE	NM	NM	NM	NM	NM	NM	NM	NM	NM	NM	NM	NM	NM	NM	NM
BENZO(A)ANTHRACENE	10 UJ	10 U	10 U	10 U	10 U	NA	NA	NA	10 U	NA	NA	10 U	10 U	NA	NA
BENZO(A)PYRENE	10 UJ	10 U	10 U	10 U	10 U	NA	NA	NA	10 U	NA	NA	10 U	10 U	NA	NA
BENZO(B)FLUORANTHENE	10 UJ	10 U	10 U	10 U	10 U	NA	NA	NA	10 U	NA	NA	10 U	10 U	NA	NA
BENZO(G,H,I)PERYLENE	10 UJ	10 U	10 U	10 U	10 U	NA	NA	NA	10 U	NA	NA	10 U	10 U	NA	NA
BENZO(K)FLUORANTHENE	10 UJ	10 U	10 U	10 U	10 U	NA	NA	NA	10 U	NA	NA	10 U	10 U	NA	NA
BENZOIC ACID	26 UR	25 UR	25 UR	26 UR	25 UR	NA	NA	NA	26 UR	NA	NA	25 UR	26 UR	NA	NA
BENZYL ALCOHOL	21 UJ	20 UJ	20 U	20 U	20 U	NA	NA	NA	21 UJ	NA	NA	20 UJ	20 UJ	NA	NA
BIS(2-CHLOROETHOXY)METHANE	10 UJ	10 U	10 U	10 U	10 U	NA	NA	NA	10 U	NA	NA	10 U	10 U	NA	NA
BIS(2-CHLOROETHYL)ETHER	10 UJ	10 UJ	10 U	10 U	10 U	NA	NA	NA	10 UJ	NA	NA	10 UJ	10 UJ	NA	NA
BIS(2-ETHYLHEXYL)PHTHALATE	10 UJ	10 U	10 U	10 U	10 U	NA	NA	NA	10 U	NA	NA	10 U	10 U	NA	NA
BUTYL BENZYL PHTHALATE	10 UJ	10 U	10 U	10 U	10 U	NA	NA	NA	10 U	NA	NA	10 U	10 U	NA	NA
CARBAZOLE	10 UJ	10 U	10 U	10 U	10 U	NA	NA	NA	10 U	NA	NA	10 U	10 U	NA	NA
CHRYSENE	10 UJ	10 U	10 U	10 U	10 U	NA	NA	NA	10 U	NA	NA	10 U	10 U	NA	NA
DIBENZO(A,H)ANTHRACENE	10 UJ	10 U	10 U	10 U	10 U	NA	NA	NA	10 U	NA	NA	10 U	10 U	NA	NA
DIBENZOFURAN	10 UJ	10 U	10 U	10 U	10 U	NA	NA	NA	10 U	NA	NA	10 U	10 U	NA	NA
DIETHYL PHTHALATE	10 UJ	10 U	10 U	10 U	10 U	NA	NA	NA	10 U	NA	NA	10 U	10 U	NA	NA
DIMETHYL PHTHALATE	10 UJ	10 U	10 U	10 U	10 U	NA	NA	NA	10 U	NA	NA	10 U	10 U	NA	NA
DI-N-BUTYL PHTHALATE	10 UJ	10 U	10 U	10 U	10 U	NA	NA	NA	10 U	NA	NA	10 U	10 U	NA	NA
DI-N-OCTYL PHTHALATE	10 UJ	10 U	10 U	10 UJ	10 U	NA	NA	NA	10 U	NA	NA	10 U	10 U	NA	NA
FLUORANTHENE	10 UJ	10 U	10 U	10 U	10 U	NA	NA	NA	10 U	NA	NA	10 U	10 U	NA	NA
FLUORENE	10 UJ	10 U	10 U	10 U	10 U	NA	NA	NA	10 U	NA	NA	10 U	10 U	NA	NA
HEXACHLOROBENZENE	10 UJ	10 U	10 U	10 U	10 U	NA	NA	NA	10 U	NA	NA	10 U	10 U	NA	NA
HEXACHLOROETHANE	10 UJ	10 U	10 U	10 U	10 U	NA	NA	NA	10 U	NA	NA	10 U	10 U	NA	NA
HIGH MOLECULAR WEIGHT PAHS	10 UJ	10 U	10 U	10 U	10 U	NA	NA	NA	10 U	NA	NA	10 U	10 U	NA	NA
INDENO(1,2,3-CD)PYRENE	10 UJ	10 U	10 U	10 U	10 U	NA	NA	NA	10 U	NA	NA	10 U	10 U	NA	NA
ISOPHORONE	10 UJ	10 U	10 U	10 U	10 U	NA	NA	NA	10 U	NA	NA	10 U	10 U	NA	NA
LOW MOLECULAR WEIGHT PAHS	10 UJ	10 UJ	10 U	10 U	10 U	NA	NA	NA	10 UJ	NA	NA	10 UJ	10 UJ	NA	NA
NAPHTHALENE	10 UJ	10 U	10 U	10 U	10 U	NA	NA	NA	10 U	NA	NA	10 U	10 U	NA	NA
NITROBENZENE	10 UJ	10 U	10 U	10 U	10 U	NA	NA	NA	10 U	NA	NA	10 U	10 U	NA	NA
N-NITROSODIMETHYLAMINE	10 UJ	10 U	10 U	10 U	10 U	NA	NA	NA	10 U	NA	NA	10 U	10 U	NA	NA
N-NITROSO-DI-N-PROPYLAMINE	10 UJ	10 U	10 U	10 U	10 U	NA	NA	NA	10 U	NA	NA	10 U	10 U	NA	NA
N-NITROSODIPHENYLAMINE	10 UJ	10 U	10 U	10 U	10 U	NA	NA	NA	10 U	NA	NA	10 U	10 U	NA	NA
N-NITROSOPYRROLIDINE	10 UJ	10 U	10 U	10 U	10 U	NA	NA	NA	10 U	NA	NA	10 U	10 U	NA	NA
PENTACHLOROPHENOL	26 UJ	25 U	25 UJ	26 UR	25 U	NA	NA	NA	26 U	NA	NA	25 UJ	26 UR	NA	NA
PHENANTHRENE	10 UJ	10 U	10 U	10 U	10 U	NA	NA	NA	10 U	NA	NA	10 U	10 U	NA	NA
PHENOL	10 UJ	10 U	10 UJ	10 UR	10 U	NA	NA	NA	10 U	NA	NA	10 UJ	10 UR	NA	NA
PYRENE	10 UJ	10 U	10 U	10 U	10 U	NA	NA	NA	10 U	NA	NA	10 U	10 U	NA	NA
TOTAL PAHS	10 UJ	10 UJ	10 U	10 U	10 U	NA	NA	NA	10 UJ	NA	NA	10 UJ	10 UJ	NA	NA

SHADED - DETECTED
U-NOT DETECTED; J-QUANTITATION APPROXIMATE; R-REJECTED; NA-NOT ANALYZED

SAMPLE ID	DA-MW110B-51908	DA-MW111B-51608	DA-MW112B-51608-AVG	DA-MW112S-51908	DA-MW113B-51608	DA-MW114-2934	DA-MW114-3439	DA-MW114-5261	DA-MW114B-51608	DA-MW115-1924	DA-MW115-2631	DA-MW115B-51508	DA-MW116B-51508	DA-GW-MW116B-D1-0810	DA-GW-MW116B-D2-0810
LOCATION ID	DA-MW110B	DA-MW111B	DA-MW112B	DA-MW112S	DA-MW113B	DA-MW114B				DA-MW115B			DA-MW116B	DA-MW116B-D1	DA-MW116B-D2
SAMPLE DATE	05/19/08	05/16/08	05/16/08	05/19/08	05/16/08	05/05/08	05/05/08	05/06/08	05/16/08	05/07/08	05/07/08	05/15/08	05/15/08	08/06/10	08/06/10
SCREEN TOP DEPTH	19.0	14.0	18.0	10.0	14.0	10.0	10.0	10.0	10.0	9.5	9.5	9.5	10.0	14.0	29.0
SCREEN BOTTOM DEPTH	49.0	44.0	47.0	20.0	46.0	61.0	61.0	61.0	61.0	48.0	48.0	48.0	40.0	29.0	39.0
WELL DEPTH	49	44	47	20	46	61	61	61	61	48	48	48	40	29	39
SACODE	NORMAL	NORMAL	AVG	NORMAL	NORMAL	NORMAL	NORMAL	NORMAL	NORMAL	NORMAL	NORMAL	NORMAL	NORMAL	NORMAL	NORMAL
QC TYPE	NM	NM	NM	NM	NM	NM	NM	NM	NM	NM	NM	NM	NM	NM	NM
PESTICIDES/PCBS (UG/L)															
4,4'-DDD	0.02 UJ	0.02 U	0.02 U	0.021 U	0.02 U	NA	NA	NA	0.021 U	NA	NA	0.02 U	0.02 U	NA	NA
4,4'-DDE	0.02 UJ	0.02 U	0.02 U	0.021 U	0.02 U	NA	NA	NA	0.021 U	NA	NA	0.02 U	0.02 U	NA	NA
4,4'-DDT	0.02 UJ	0.02 U	0.02 U	0.021 U	0.02 U	NA	NA	NA	0.021 U	NA	NA	0.02 U	0.02 U	NA	NA
ALDRIN	0.01 UJ	0.01 U	0.01 U	0.01 U	0.01 U	NA	NA	NA	0.01 U	NA	NA	0.01 U	0.01 U	NA	NA
ALPHA-BHC	0.01 UJ	0.01 U	0.01 U	0.01 U	0.01 U	NA	NA	NA	0.01 U	NA	NA	0.01 U	0.01 U	NA	NA
ALPHA-CHLORDANE	0.01 UJ	0.01 U	0.01 U	0.01 U	0.01 U	NA	NA	NA	0.01 U	NA	NA	0.01 U	0.01 U	NA	NA
AROCLOR-1016	0.1 UJ	0.1 U	0.105 U	0.1 U	0.1 U	NA	NA	NA	0.1 U	NA	NA	0.1 U	0.1 U	NA	NA
AROCLOR-1221	0.1 UJ	0.1 U	0.105 U	0.1 U	0.1 U	NA	NA	NA	0.1 U	NA	NA	0.1 U	0.1 U	NA	NA
AROCLOR-1232	0.1 UJ	0.1 U	0.105 U	0.1 U	0.1 U	NA	NA	NA	0.1 U	NA	NA	0.1 U	0.1 U	NA	NA
AROCLOR-1242	0.1 UJ	0.1 U	0.105 U	0.1 U	0.1 U	NA	NA	NA	0.1 U	NA	NA	0.1 U	0.1 U	NA	NA
AROCLOR-1248	0.1 UJ	0.1 U	0.105 U	0.1 U	0.1 U	NA	NA	NA	0.1 U	NA	NA	0.1 U	0.1 U	NA	NA
AROCLOR-1254	0.1 UJ	0.1 U	0.105 U	0.1 U	0.1 U	NA	NA	NA	0.1 U	NA	NA	0.1 U	0.1 U	NA	NA
AROCLOR-1260	0.1 UJ	0.1 U	0.105 U	0.1 U	0.1 U	NA	NA	NA	0.1 U	NA	NA	0.1 U	0.1 U	NA	NA
AROCLOR-1268	0.1 UJ	0.1 U	0.105 U	0.1 U	0.1 U	NA	NA	NA	0.1 U	NA	NA	0.1 U	0.1 U	NA	NA
BETA-BHC	0.01 UJ	0.01 U	0.01 U	0.01 U	0.01 U	NA	NA	NA	0.01 U	NA	NA	0.01 U	0.01 U	NA	NA
DELTA-BHC	0.01 UJ	0.01 U	0.01 U	0.01 U	0.01 U	NA	NA	NA	0.01 U	NA	NA	0.01 U	0.01 U	NA	NA
DIELDRIN	0.02 UJ	0.02 U	0.02 U	0.021 U	0.02 U	NA	NA	NA	0.021 U	NA	NA	0.02 U	0.02 U	NA	NA
ENDOSULFAN I	0.01 UJ	0.01 U	0.01 U	0.01 U	0.01 U	NA	NA	NA	0.01 U	NA	NA	0.01 U	0.01 U	NA	NA
ENDOSULFAN II	0.02 UJ	0.02 U	0.02 U	0.021 U	0.02 U	NA	NA	NA	0.021 U	NA	NA	0.02 U	0.02 U	NA	NA
ENDOSULFAN SULFATE	0.02 UJ	0.02 U	0.02 U	0.021 U	0.02 U	NA	NA	NA	0.021 U	NA	NA	0.02 U	0.02 U	NA	NA
ENDRIN	0.02 UJ	0.02 U	0.02 U	0.021 U	0.02 U	NA	NA	NA	0.021 U	NA	NA	0.02 U	0.02 U	NA	NA
ENDRIN ALDEHYDE	0.02 UJ	0.02 U	0.02 U	0.021 U	0.02 U	NA	NA	NA	0.021 U	NA	NA	0.02 U	0.02 U	NA	NA
ENDRIN KETONE	0.02 UJ	0.02 U	0.02 U	0.021 U	0.02 U	NA	NA	NA	0.021 U	NA	NA	0.02 U	0.02 U	NA	NA
GAMMA-BHC (LINDANE)	0.01 UJ	0.01 U	0.01 U	0.01 U	0.01 U	NA	NA	NA	0.01 U	NA	NA	0.01 U	0.01 U	NA	NA
GAMMA-CHLORDANE	0.01 UJ	0.01 U	0.01 U	0.01 U	0.01 U	NA	NA	NA	0.01 U	NA	NA	0.01 U	0.01 U	NA	NA
HEPTACHLOR	0.01 UJ	0.01 U	0.01 U	0.01 U	0.01 U	NA	NA	NA	0.01 U	NA	NA	0.01 U	0.01 U	NA	NA
HEPTACHLOR EPOXIDE	0.01 UJ	0.01 U	0.01 U	0.01 U	0.01 U	NA	NA	NA	0.01 U	NA	NA	0.01 U	0.01 U	NA	NA
METHOXYCHLOR	0.1 UJ	0.1 U	0.1 U	0.1 U	0.1 U	NA	NA	NA	0.1 U	NA	NA	0.1 U	0.1 U	NA	NA
TOTAL AROCLOR	0.1 UJ	0.1 U	0.1 U	0.1 U	0.1 U	NA	NA	NA	0.1 U	NA	NA	0.1 U	0.1 U	NA	NA
TOTAL DDD/DDE/DDT	0.02 UJ	0.02 U	0.02 U	0.021 U	0.02 U	NA	NA	NA	0.021 U	NA	NA	0.02 U	0.02 U	NA	NA
TOXAPHENE	0.2 UJ	0.2 U	0.2 U	0.21 U	0.2 U	NA	NA	NA	0.21 U	NA	NA	0.2 U	0.2 U	NA	NA
EXPLOSIVES (UG/L)															
1,2-PROPYLENE GLYCOL DINITRATE	NA	NA	NA	NA	NA	NA	NA	NA	NA	NA	NA	NA	NA	NA	NA

SHADED - DETECTED
U-NOT DETECTED; J-QUANTITATION APPROXIMATE; R-REJECTED; NA-NOT ANALYZED

SAMPLE ID	DA-MW110B-51908	DA-MW111B-51608	DA-MW112B-51608-AVG	DA-MW112S-51908	DA-MW113B-51608	DA-MW114-2934	DA-MW114-3439	DA-MW114-5261	DA-MW114B-51608	DA-MW115-1924	DA-MW115-2631	DA-MW115B-51508	DA-MW116B-51508	DA-GW-MW116B-D1-0810	DA-GW-MW116B-D2-0810
LOCATION ID	DA-MW110B	DA-MW111B	DA-MW112B	DA-MW112S	DA-MW113B	DA-MW114B				DA-MW115B			DA-MW116B	DA-MW116B-D1	DA-MW116B-D2
SAMPLE DATE	05/19/08	05/16/08	05/16/08	05/19/08	05/16/08	05/05/08	05/05/08	05/06/08	05/16/08	05/07/08	05/07/08	05/15/08	05/15/08	08/06/10	08/06/10
SCREEN TOP DEPTH	19.0	14.0	18.0	10.0	14.0	10.0	10.0	10.0	10.0	9.5	9.5	9.5	10.0	14.0	29.0
SCREEN BOTTOM DEPTH	49.0	44.0	47.0	20.0	46.0	61.0	61.0	61.0	61.0	48.0	48.0	48.0	40.0	29.0	39.0
WELL DEPTH	49	44	47	20	46	61	61	61	61	48	48	48	40	29	39
SACODE	NORMAL	NORMAL	AVG	NORMAL	NORMAL	NORMAL	NORMAL	NORMAL	NORMAL	NORMAL	NORMAL	NORMAL	NORMAL	NORMAL	NORMAL
QC TYPE	NM	NM	NM	NM	NM	NM	NM	NM	NM	NM	NM	NM	NM	NM	NM
METALS (UG/L)															
ALUMINUM	820	106 J	426	3420	275 J	NA	NA	NA	53.8 UJ	NA	NA	952	84.6 UJ	NA	NA
ANTIMONY	1.9 UJ	0.94 UJ	1.55 UJ	1.2 UJ	0.78 U	NA	NA	NA	0.78 U	NA	NA	0.86 UJ	0.78 U	NA	NA
ARSENIC	2.3 J	1.69 U	2.2 J	2.7 J	7.4 J	NA	NA	NA	1.69 U	NA	NA	15.3	17.8	NA	NA
BARIUM	5.5	5.1	2.7 UJ	17.6	5.5	NA	NA	NA	2.3 UJ	NA	NA	11.6	9.1	NA	NA
BERYLLIUM	0.13 U	0.13 U	0.13 U	0.13 U	0.13 U	NA	NA	NA	0.13 U	NA	NA	0.13 U	0.13 U	NA	NA
CADMIUM	0.28 UJ	0.09 UJ	0.09 UJ	0.04 U	0.36 UJ	NA	NA	NA	0.14 UJ	NA	NA	0.18 UJ	0.14 UJ	NA	NA
CALCIUM	44000	19600	40400	26200	32200	NA	NA	NA	12200	NA	NA	31600	20200	NA	NA
CHROMIUM	3.3 UJ	0.79 UJ	1.6 UJ	5.2 J	2.2 UJ	NA	NA	NA	0.41 U	NA	NA	2.4 UJ	0.61 UJ	NA	NA
COBALT	1.7 UJ	0.67 UJ	1.25 UJ	3.7 J	1.3 UJ	NA	NA	NA	1.8 UJ	NA	NA	2.9 UJ	6.7 J	NA	NA
COPPER	1.6 J	0.75 UJ	0.75 UJ	6.5 J	4.8 J	NA	NA	NA	0.75 UJ	NA	NA	6.5 J	0.75 UJ	NA	NA
IRON	8680	2930	1010	6040	10800	1230	9290	9950	138	13900	17300	3960	8580	NA	NA
LEAD	1.1 J	0.97 UJ	0.97 UJ	3.6 J	0.97 UJ	NA	NA	NA	0.97 UJ	NA	NA	1.1 J	0.97 UJ	NA	NA
MAGNESIUM	12500	8070	12200	8600	10500	NA	NA	NA	5660	NA	NA	10500	8860	NA	NA
MANGANESE	2700	56.6	1300	501	1100	NA	NA	NA	723	NA	NA	711	1140	NA	NA
MERCURY	0.03 U	0.06 UJ	0.06 UJ	0.03 U	0.06 UJ	NA	NA	NA	0.06 UJ	NA	NA	0.06 UJ	0.03 U	NA	NA
MOLYBDENUM	1.5 UJ	0.3 U	0.53 UJ	0.52 UJ	0.98 UJ	NA	NA	NA	0.33 UJ	NA	NA	1.3 UJ	0.48 UJ	NA	NA
NICKEL	1.9 J	8.4 J	0.335 J	6.5 J	2.1 J	NA	NA	NA	2.1 J	NA	NA	2.3 J	4.7 J	NA	NA
POTASSIUM	2020	754 UJ	703 UJ	1550	772 UJ	NA	NA	NA	848 UJ	NA	NA	835 UJ	646 UJ	NA	NA
SELENIUM	0.96 U	0.96 U	0.96 U	0.96 U	0.96 U	NA	NA	NA	0.96 U	NA	NA	0.96 U	0.96 U	NA	NA
SILVER	0.89 UJ	0.5 UJ	0.29 U	0.29 U	0.67 UJ	NA	NA	NA	0.41 UJ	NA	NA	0.6 UJ	0.43 UJ	NA	NA
SODIUM	12100	11800	11300	10400	10800	NA	NA	NA	8680	NA	NA	9560	10600	NA	NA
THALLIUM	1.64 U	1.64 U	1.64 U	1.64 U	1.64 U	NA	NA	NA	1.64 U	NA	NA	1.64 U	1.64 U	NA	NA
VANADIUM	1 UJ	0.61 UJ	0.795 UJ	3.8 J	0.38 U	NA	NA	NA	0.38 U	NA	NA	1.5 J	0.43 UJ	NA	NA
ZINC	9.7 UJ	6 UJ	6.55 UJ	22.6 J	11.1 UJ	NA	NA	NA	6.6 UJ	NA	NA	15.6 J	14.4 J	NA	NA
DISSOLVED METALS (UG/L)															
ALUMINUM	47.9 UJ	27.8 UJ	27.4 UJ	181 J	24 UJ	NA	NA	NA	14.6 U	NA	NA	24.9 UJ	17.4 UJ	NA	NA
ANTIMONY	1.5 UJ	0.97 UJ	1.1 UJ	0.78 U	1.4 UJ	NA	NA	NA	0.78 U	NA	NA	1.7 UJ	0.78 U	NA	NA
ARSENIC	1.69 U	1.69 U	1.37 J	1.69 U	2.8 J	NA	NA	NA	1.69 U	NA	NA	14.1	18.4	NA	NA
BARIUM	1.9 UJ	5.3	1.35 UJ	9.2	4.2 J	NA	NA	NA	2.3 UJ	NA	NA	9.4	9	NA	NA
BERYLLIUM	0.13 U	0.13 U	0.13 U	0.13 U	0.13 U	NA	NA	NA	0.13 U	NA	NA	0.13 U	0.13 U	NA	NA
CADMIUM	0.04 U	0.12 UJ	0.1 UJ	0.04 U	0.26 UJ	NA	NA	NA	0.12 UJ	NA	NA	0.1 UJ	0.16 UJ	NA	NA
CALCIUM	41600	20200	39200	25800	32000	NA	NA	NA	12800	NA	NA	32800	20400	NA	NA
CHROMIUM	1.2 UJ	0.41 U	0.55 UJ	0.93 UJ	0.5 UJ	NA	NA	NA	0.41 U	NA	NA	0.44 UJ	0.41 U	NA	NA
COBALT	1.3 UJ	0.65 UJ	0.965 UJ	0.68 UJ	1.4 UJ	NA	NA	NA	1.9 UJ	NA	NA	1.7 UJ	6.8 J	NA	NA
COPPER	0.75 UJ	0.75 UJ	0.75 UJ	0.75 UJ	0.75 UJ	NA	NA	NA	0.75 UJ	NA	NA	0.75 UJ	0.75 UJ	NA	NA
IRON	4950	774	65.6 UJ	288	998	918	3520	3030	29.5 UJ	5600	4890	1860	8470	NA	NA
LEAD	0.97 UJ	0.97 UJ	0.97 UJ	0.97 UJ	0.97 UJ	NA	NA	NA	0.97 UJ	NA	NA	0.97 UJ	0.97 UJ	NA	NA

SHADED - DETECTED
U-NOT DETECTED; J-QUANTITATION APPROXIMATE; R-REJECTED; NA-NOT ANALYZED

SAMPLE ID	DA-MW110B-51908	DA-MW111B-51608	DA-MW112B-51608-AVG	DA-MW112S-51908	DA-MW113B-51608	DA-MW114-2934	DA-MW114-3439	DA-MW114-5261	DA-MW114B-51608	DA-MW115-1924	DA-MW115-2631	DA-MW115B-51508	DA-MW116B-51508	DA-GW-MW116B-D1-0810	DA-GW-MW116B-D2-0810
LOCATION ID	DA-MW110B	DA-MW111B	DA-MW112B	DA-MW112S	DA-MW113B	DA-MW114B				DA-MW115B			DA-MW116B	DA-MW116B-D1	DA-MW116B-D2
SAMPLE DATE	05/19/08	05/16/08	05/16/08	05/19/08	05/16/08	05/05/08	05/05/08	05/06/08	05/16/08	05/07/08	05/07/08	05/15/08	05/15/08	08/06/10	08/06/10
SCREEN TOP DEPTH	19.0	14.0	18.0	10.0	14.0	10.0	10.0	10.0	10.0	9.5	9.5	9.5	10.0	14.0	29.0
SCREEN BOTTOM DEPTH	49.0	44.0	47.0	20.0	46.0	61.0	61.0	61.0	61.0	48.0	48.0	48.0	40.0	29.0	39.0
WELL DEPTH	49	44	47	20	46	61	61	61	61	48	48	48	40	29	39
SACODE	NORMAL	NORMAL	AVG	NORMAL	NORMAL	NORMAL	NORMAL	NORMAL	NORMAL	NORMAL	NORMAL	NORMAL	NORMAL	NORMAL	NORMAL
QC TYPE	NM	NM	NM	NM	NM	NM	NM	NM	NM	NM	NM	NM	NM	NM	NM
MAGNESIUM	11800	8210	11800	8130	10500	NA	NA	NA	5840	NA	NA	10600	8990	NA	NA
MANGANESE	2540	53.5	1300	240	1070	NA	NA	NA	747	NA	NA	684	1140	NA	NA
MERCURY	0.03 U	0.06 UJ	0.06 UJ	0.03 U	0.06 UJ	NA	NA	NA	0.06 UJ	NA	NA	0.06 UJ	0.06 UJ	NA	NA
MOLYBDENUM	0.93 UJ	0.3 U	0.425 UJ	0.3 U	0.41 UJ	NA	NA	NA	0.3 U	NA	NA	0.95 UJ	0.36 UJ	NA	NA
NICKEL	0.42 U	1.2 J	0.42 U	0.42 U	1.4 J	NA	NA	NA	2.1 J	NA	NA	0.42 U	4.9 J	NA	NA
POTASSIUM	1870	809 UJ	652 UJ	1260	808 UJ	NA	NA	NA	795 UJ	NA	NA	775 UJ	667 UJ	NA	NA
SELENIUM	0.96 U	0.96 U	0.96 U	0.96 U	0.96 U	NA	NA	NA	0.96 U	NA	NA	0.96 U	0.96 U	NA	NA
SILVER	0.35 UJ	0.49 UJ	0.42 UJ	0.39 UJ	0.29 UJ	NA	NA	NA	0.29 U	NA	NA	0.62 UJ	0.63 UJ	NA	NA
SODIUM	11600	12200	11100	10900	10900	NA	NA	NA	8930	NA	NA	9720	10700	NA	NA
THALLIUM	1.64 U	1.64 U	1.64 U	1.64 U	1.64 U	NA	NA	NA	1.64 U	NA	NA	1.64 U	1.64 U	NA	NA
VANADIUM	0.38 U	0.39 UJ	0.43 UJ	0.47 UJ	0.38 U	NA	NA	NA	0.38 U	NA	NA	0.46 UJ	0.38 U	NA	NA
ZINC	7.2 UJ	8.1 UJ	4.65 UJ	6.2 UJ	5.7 UJ	NA	NA	NA	6.9 UJ	NA	NA	7.4 UJ	15.5 J	NA	NA
MISCELLANEOUS PARAMETERS (MG/L)															
AMMONIA-N	0.1 U	0.1 U	0.1 U	0.084 J	0.047 J	NA	NA	NA	0.1 U	NA	NA	0.1 U	0.1 U	NA	NA
CHLORIDE	NA	NA	NA	NA	NA	NA	NA	NA	NA	NA	NA	NA	NA	NA	NA
NITRATE-N	0.078	1.7	0.05 U	2.7	0.55	NA	NA	NA	0.25	NA	NA	0.05 U	0.05 U	NA	NA
NITRITE-N	0.0064 J	0.05 U	0.05 U	0.1 U	0.05 U	NA	NA	NA	0.05 U	NA	NA	0.05 U	0.05 U	NA	NA
ORTHOPHOSPHATE-P	0.063	0.034 J	0.023 J	0.048 J	0.02 J	NA	NA	NA	0.12	NA	NA	0.022 J	0.038 J	NA	NA
SULFATE	33	27	33	27	32	NA	NA	NA	16	NA	NA	25	29	NA	NA
SULFIDE	2	1 U	1 U	1.4	1 U	NA	NA	NA	1 U	NA	NA	3.1	1 U	NA	NA
TOTAL ORGANIC CARBON	0.59 J	1.3	0.59 J	1.1	0.67 J	NA	NA	NA	1.1	NA	NA	0.38 J	0.28 J	NA	NA
MISCELLANEOUS PARAMETERS (UG/L)															
CYANIDE	NA	NA	NA	NA	NA	NA	NA	NA	NA	NA	NA	NA	NA	NA	NA
METHANE	8.7 J	10 U	4.75 J	72	2.4 J	NA	NA	NA	10 U	NA	NA	1.3 J	10 U	NA	NA
FIELD (UG/L)															
FERROUS IRON	3040	750	10	60	600	NA	NA	NA	0 U	NA	NA	1830	2980	NA	NA
PETROLEUM HYDROCARBONS (UG/L)															
EXTRACTABLE TPH (C09-C36)	77 UJ	51 J	47.5 J	82 U	49 J	NA	NA	NA	76 U	NA	NA	75 U	75 U	NA	NA
GASOLINE RANGE ORGANICS	10 UJ	10 U	10 U	10 U	10 U	NA	NA	NA	10 U	NA	NA	10 U	10 U	NA	NA

SHADED - DETECTED
U-NOT DETECTED; J-QUANTITATION APPROXIMATE; R-REJECTED; NA-NOT ANALYZED

SAMPLE ID	DA-MW117B-51508	DA-MW-117B-D1-081110	DA-MW-117B-D2-081110	DA-MW118B-51508	DA-MW-118B-D1-081010	DA-MW-118B-D2-081010	DA-MW119B-51408	DA-MW120B-51408	DA-MW122B-6308-AVG	DA-MW-122-063010	DA-MW123B-6408
LOCATION ID	DA-MW117B	DA-MW117B-D1	DA-MW117B-D2	DA-MW118B	DA-MW118B-D1	DA-MW118B-D2	DA-MW119B	DA-MW120B	DA-MW122		DA-MW123
SAMPLE DATE	05/15/08	08/11/10	08/11/10	05/15/08	08/10/10	08/10/10	05/14/08	05/14/08	06/03/08	06/30/10	06/04/08
SCREEN TOP DEPTH	10.0	19.0	29.0	18.0	27.0	37.0	15.0	10.0	0.0	0.0	2.0
SCREEN BOTTOM DEPTH	40.0	29.0	39.0	49.0	37.0	47.0	45.0	60.0	5.0	5.0	8.0
WELL DEPTH	40	29	39	49	37	47	45	60	5	5	8
SACODE	NORMAL	NORMAL	NORMAL	NORMAL	NORMAL	NORMAL	NORMAL	NORMAL	AVG	NORMAL	NORMAL
QC TYPE	NM	NM	NM	NM	NM	NM	NM	NM	NM	NM	NM
VOLATILES (UG/L)											
1,1,1,2-TETRACHLOROETHANE	1 U	0.5 U	0.5 U	1 U	0.5 U	0.5 U	1 U	1 U	1 U	0.5 U	1 U
1,1,1-TRICHLOROETHANE	1 U	0.5 U	0.5 U	1 U	0.5 U	0.5 U	1 U	1 U	1	0.5 U	1 U
1,1,2,2-TETRACHLOROETHANE	1 U	0.5 U	0.5 U	1 U	0.5 U	0.5 U	1 U	1 U	1 U	0.5 U	1 U
1,1,2-TRICHLOROETHANE	1 U	0.5 U	0.5 U	1 U	0.5 U	0.5 U	1 U	1 U	1 U	0.5 U	1 U
1,1-DICHLOROETHANE	0.4 J	0.28 J	0.7 J	1 U	0.5 U	0.5 U	1 U	1 U	0.4 J	0.84 J	1 U
1,1-DICHLOROETHENE	1 J	0.45 J	0.5 U	1 U	1.4	0.59 J	1 U	1 U	1 U	0.5 U	1 U
1,1-DICHLOROPROPENE	1 U	0.5 U	0.5 U	1 U	0.5 U	0.5 U	1 U	1 U	1 U	0.5 U	1 U
1,2,3-TRICHLOROBENZENE	1 U	0.5 U	0.5 U	1 U	0.5 U	0.5 U	1 U	1 U	1 U	0.5 U	1 U
1,2,3-TRICHLOROPROPANE	1 U	0.5 U	0.5 U	1 U	0.5 U	0.5 U	1 U	1 U	1 U	0.5 U	1 U
1,2,4-TRICHLOROBENZENE	1 U	0.5 U	0.5 U	1 U	0.5 U	0.5 U	1 U	1 U	1 U	0.5 U	1 U
1,2,4-TRIMETHYLBENZENE	1 U	0.5 U	0.5 U	1 U	0.5 U	0.5 U	1 U	1 U	1 U	0.5 U	1 U
1,2-DIBROMO-3-CHLOROPROPANE	1 U	0.75 U	0.75 U	1 U	0.75 U	0.75 U	1 U	1 U	1 U	0.75 U	1 UJ
1,2-DIBROMOETHANE	1 U	0.5 U	0.5 U	1 U	0.5 U	0.5 U	1 U	1 U	1 U	0.5 U	1 U
1,2-DICHLOROBENZENE	1 U	0.5 U	0.5 U	1 U	0.5 U	0.5 U	1 U	1 U	1 U	0.5 U	1 U
1,2-DICHLOROETHANE	1 U	0.5 U	0.5 U	1 U	0.5 U	0.5 U	1 U	1 U	1 U	0.5 U	1 U
1,2-DICHLOROPROPANE	1 U	0.5 U	0.5 U	1 U	0.5 U	0.5 U	1 U	1 U	1 U	0.5 U	1 U
1,3,5-TRIMETHYLBENZENE	1 U	0.5 U	0.5 U	1 U	0.5 U	0.5 U	1 U	1 U	1 U	0.5 U	1 U
1,3-DICHLOROBENZENE	1 U	0.5 U	0.5 U	1 U	0.5 U	0.5 U	1 U	1 U	1 U	0.5 U	1 U
1,3-DICHLOROPROPANE	1 U	0.5 U	0.5 U	1 U	0.5 U	0.5 U	1 U	1 U	1 U	0.5 U	1 U
1,4-DICHLOROBENZENE	1 U	0.5 U	0.5 U	1 U	0.5 U	0.5 U	1 U	1 U	1 U	0.5 U	1 U
2,2-DICHLOROPROPANE	1 U	0.5 U	0.5 U	1 U	0.5 U	0.5 U	1 U	1 U	1 UJ	0.5 U	1 UJ
2-BUTANONE	5 U	2.5 U	2.5 U	5 U	2.5 U	2.5 U	5 U	5 U	5 U	2.5 U	5 U
2-CHLOROTOLUENE	1 U	0.5 U	0.5 U	1 U	0.5 U	0.5 U	1 U	1 U	1 U	0.5 U	1 U
2-HEXANONE	5 U	2.5 U	2.5 U	5 U	2.5 U	2.5 U	5 U	5 U	5 U	2.5 U	5 U
4-CHLOROTOLUENE	1 U	0.5 U	0.5 U	1 U	0.5 U	0.5 U	1 U	1 U	1 U	0.5 U	1 U
4-ISOPROPYLTOLUENE	1 U	0.5 U	0.5 U	1 U	0.5 U	0.5 U	1 U	1 U	1 U	0.5 U	1 U
4-METHYL-2-PENTANONE	5 U	2.5 U	2.5 U	5 U	2.5 U	2.5 U	5 U	5 U	5 U	2.5 U	5 U
ACETONE	5 U	2.5 U	2.5 U	5 U	2.5 U	2.5 U	5 UJ	5 UJ	2.25 J	2.5 UJ	5 U
BENZENE	1 U	0.5 U	0.5 U	1 U	0.5 U	0.5 U	1 U	1 U	1 U	0.5 U	1 U
BROMOBENZENE	1 U	0.5 U	0.5 U	1 U	0.5 U	0.5 U	1 U	1 U	1 U	0.5 U	1 U
BROMOCHLOROMETHANE	1 U	0.5 U	0.5 U	1 U	0.5 U	0.5 U	1 U	1 U	1 U	0.5 U	1 U
BROMODICHLOROMETHANE	1 U	0.5 U	0.5 U	1 U	0.5 U	0.5 U	1 U	1 U	1 U	0.5 U	1 U
BROMOFORM	1 UJ	0.5 U	0.5 U	1 UJ	0.5 UJ	0.5 UJ	1 U	1 U	1 U	0.5 U	1 U

SHADED - DETECTED
U-NOT DETECTED; J-QUANTITATION APPROXIMATE; R-REJECTED; NA-NOT ANALYZED

SAMPLE ID	DA-MW117B-51508	DA-MW-117B-D1-081110	DA-MW-117B-D2-081110	DA-MW118B-51508	DA-MW-118B-D1-081010	DA-MW-118B-D2-081010	DA-MW119B-51408	DA-MW120B-51408	DA-MW122B-6308-AVG	DA-MW-122-063010	DA-MW123B-6408
LOCATION ID	DA-MW117B	DA-MW117B-D1	DA-MW117B-D2	DA-MW118B	DA-MW118B-D1	DA-MW118B-D2	DA-MW119B	DA-MW120B	DA-MW122		DA-MW123
SAMPLE DATE	05/15/08	08/11/10	08/11/10	05/15/08	08/10/10	08/10/10	05/14/08	05/14/08	06/03/08	06/30/10	06/04/08
SCREEN TOP DEPTH	10.0	19.0	29.0	18.0	27.0	37.0	15.0	10.0	0.0	0.0	2.0
SCREEN BOTTOM DEPTH	40.0	29.0	39.0	49.0	37.0	47.0	45.0	60.0	5.0	5.0	8.0
WELL DEPTH	40	29	39	49	37	47	45	60	5	5	8
SACODE	NORMAL	NORMAL	NORMAL	NORMAL	NORMAL	NORMAL	NORMAL	NORMAL	AVG	NORMAL	NORMAL
QC TYPE	NM	NM	NM	NM	NM	NM	NM	NM	NM	NM	NM
BROMOMETHANE	2 U	1 U	1 U	2 U	1 U	1 U	2 U	2 U	2 UJ	1 U	2 U
BTEX	1.1 U	0.562 U	0.562 U	1.1 U	0.562 U	0.562 U	1.1 U	1.1 U	1.1 U	0.562 U	1.1 U
CARBON DISULFIDE	1 U	0.5 U	0.5 U	1 U	0.5 U	0.5 U	1 U	1 U	1 U	0.5 U	1 U
CARBON TETRACHLORIDE	1 UJ	0.5 U	0.5 U	1 U	0.5 U	0.5 U	1 U	1 U	1 U	0.5 U	1 U
CHLOROBENZENE	1 U	0.5 U	0.5 U	1 U	0.5 U	0.5 U	1 U	1 U	1 U	0.5 U	1 U
CHLORODIBROMOMETHANE	1 U	0.5 U	0.5 U	1 U	0.5 U	0.5 U	1 U	1 U	1 U	0.5 U	1 U
CHLOROETHANE	2 UJ	1 U	1 U	2 U	1 U	1 U	2 U	2 U	2 U	1 U	2 U
CHLOROFORM	1 U	0.5 U	0.5 U	1 U	0.5 U	0.5 U	1 U	1 U	1 U	0.5 U	1 U
CHLOROMETHANE	2 U	1 U	1 U	2 U	1 U	1 U	2 U	2 U	2 U	1 U	2 U
CIS-1,2-DICHLOROETHENE	2	1.4	0.79 J	0.4 J	3.2	1.8	1 U	1 U	1 U	0.53 J	0.4 J
CIS-1,3-DICHLOROPROPENE	1 U	0.5 U	0.5 U	1 U	0.5 U	0.5 U	1 U	1 U	1 U	0.5 U	1 U
DIBROMOMETHANE	1 U	0.5 U	0.5 U	1 U	0.5 U	0.5 U	1 U	1 U	1 U	0.5 U	1 U
DICHLORODIFLUOROMETHANE	2 U	1 U	1 U	2 U	1 U	1 U	2 U	2 U	2 U	1 U	2 U
ETHYLBENZENE	1 U	0.5 U	0.5 U	1 U	0.5 U	0.5 U	1 U	1 U	1 U	0.5 U	1 U
HEXACHLOROBUTADIENE	1 U	0.5 U	0.5 U	1 U	0.5 U	0.5 U	1 U	1 U	1 U	0.5 U	1 U
ISOPROPYLBENZENE	1 U	0.5 U	0.5 U	1 U	0.5 U	0.5 U	1 U	1 U	1 U	0.5 U	1 U
M+P-XYLENES	2 U	1 U	1 U	2 U	1 U	1 U	2 U	2 U	2 U	1 U	2 U
METHYL TERT-BUTYL ETHER	1 U	0.5 U	0.5 U	1 U	0.5 UJ	0.5 UJ	1 U	1 U	1 U	0.5 U	1 UJ
METHYLENE CHLORIDE	5 U	2.5 U	2.5 U	5 U	2.5 U	2.5 U	5 U	5 U	5 U	2.5 U	5 U
N-BUTYLBENZENE	1 U	0.5 U	0.5 U	1 U	0.5 U	0.5 U	1 U	1 U	1 U	0.5 U	1 U
N-PROPYLBENZENE	1 U	0.5 U	0.5 U	1 U	0.5 U	0.5 U	1 U	1 U	1 U	0.5 U	1 U
O-XYLENE	1 U	0.5 U	0.5 U	1 U	0.5 U	0.5 U	1 U	1 U	1 U	0.5 U	1 U
SEC-BUTYLBENZENE	1 U	0.5 U	0.5 U	1 U	0.5 U	0.5 U	1 U	1 U	1 U	0.5 U	1 U
STYRENE	1 U	0.5 U	0.5 U	1 U	0.5 U	0.5 U	1 U	1 U	1 U	0.5 U	1 U
TERT-BUTYLBENZENE	1 U	0.5 U	0.5 U	1 U	0.5 U	0.5 U	1 U	1 U	1 U	0.5 U	1 U
TETRACHLOROETHENE	1 U	0.5 U	0.5 U	1 U	0.5 U	0.5 U	1 U	1 U	1 U	0.58 J	2
TOLUENE	1 U	0.5 U	0.5 U	1 U	0.5 U	0.5 U	1 U	1 U	1 U	0.5 U	1 U
TOTAL 1,2-DICHLOROETHENE	2	1.4	0.79 J	0.4 J	3.56 J	1.8	1 U	1 U	1 U	0.53 J	0.4 J
TOTAL CHLORINATED ETHENES	732	142 J	131 J	18.4 J	205 J	162 J	2 J	1.2 U	1.2 U	1.68 J	3.3 J
TOTAL CHLORINATED VOCS	733.4 J	142 J	131 J	18.4 J	205 J	162 J	2 J	1.3 U	1.4 J	2.52 J	3.3 J
TOTAL XYLENES	1.5 U	0.75 U	0.75 U	1.5 U	0.75 U	0.75 U	1.5 U	1.5 U	1.5 U	0.75 U	1.5 U
TRANS-1,2-DICHLOROETHENE	1 U	0.5 U	0.5 U	1 U	0.36 J	0.5 U	1 U	1 U	1 U	0.5 U	1 U
TRANS-1,3-DICHLOROPROPENE	1 U	0.5 U	0.5 U	1 U	0.5 U	0.5 U	1 U	1 U	1 U	0.5 U	1 U
TRICHLOROETHENE	730	140	130	18	200	160	1 U	1 U	1 U	0.57 J	0.9 J
TRICHLOROFLUOROMETHANE	2 U	1 U	1 U	2 U	1 U	1 U	2 U	2 U	2 U	1 U	2 U
VINYL CHLORIDE	2 U	1 U	1 U	2 U	1 U	1 U	2 J	2 U	2 U	1 U	2 U

SHADED - DETECTED
U-NOT DETECTED; J-QUANTITATION APPROXIMATE; R-REJECTED; NA-NOT ANALYZED

SAMPLE ID	DA-MW117B-51508	DA-MW-117B-D1-081110	DA-MW-117B-D2-081110	DA-MW118B-51508	DA-MW-118B-D1-081010	DA-MW-118B-D2-081010	DA-MW119B-51408	DA-MW120B-51408	DA-MW122B-6308-AVG	DA-MW-122-063010	DA-MW123B-6408
LOCATION ID	DA-MW117B	DA-MW117B-D1	DA-MW117B-D2	DA-MW118B	DA-MW118B-D1	DA-MW118B-D2	DA-MW119B	DA-MW120B	DA-MW122		DA-MW123
SAMPLE DATE	05/15/08	08/11/10	08/11/10	05/15/08	08/10/10	08/10/10	05/14/08	05/14/08	06/03/08	06/30/10	06/04/08
SCREEN TOP DEPTH	10.0	19.0	29.0	18.0	27.0	37.0	15.0	10.0	0.0	0.0	2.0
SCREEN BOTTOM DEPTH	40.0	29.0	39.0	49.0	37.0	47.0	45.0	60.0	5.0	5.0	8.0
WELL DEPTH	40	29	39	49	37	47	45	60	5	5	8
SACODE	NORMAL	NORMAL	NORMAL	NORMAL	NORMAL	NORMAL	NORMAL	NORMAL	AVG	NORMAL	NORMAL
QC TYPE	NM	NM	NM	NM	NM	NM	NM	NM	NM	NM	NM
VOLATILE GASES (UG/L)											
ETHANE	10 U	2 U	2 U	10 U	NA	NA	50 U	10 U	10 U	NA	10 U
ETHENE	10 U	2 U	2 U	10 U	NA	NA	50 U	10 U	10 U	NA	10 U
METHANE	NA	1.4 J	1.5 J	NA	NA	NA	NA	NA	NA	NA	NA
SEMIVOLATILES (UG/L)											
1,1-BIPHENYL	10 UJ	NA	NA	10 UJ	NA	NA	10 UJ	10 UJ	11 U	NA	10 U
1,2-DIPHENYLHYDRAZINE	21 U	NA	NA	20 U	NA	NA	20 U	20 U	22 U	NA	21 U
1,4-DIOXANE	NA	0.5 U	0.55 U	NA	NA	NA	NA	NA	NA	0.48 U	NA
2,2'-OXYBIS(1-CHLOROPROPANE)	10 U	NA	NA	10 U	NA	NA	10 UJ	10 UJ	11 U	NA	10 U
2,4,5-TRICHLOROPHENOL	26 UR	NA	NA	25 U	NA	NA	25 U	25 UR	27.5 U	NA	26 U
2,4,6-TRICHLOROPHENOL	10 UR	NA	NA	10 U	NA	NA	10 U	10 UR	11 U	NA	10 U
2,4-DICHLOROPHENOL	10 UR	NA	NA	10 U	NA	NA	10 U	10 UR	11 U	NA	10 U
2,4-DIMETHYLPHENOL	10 UR	NA	NA	10 U	NA	NA	10 U	10 UR	11 U	NA	10 U
2,4-DINITROPHENOL	26 UR	NA	NA	25 U	NA	NA	25 U	25 UR	27.5 UR	NA	26 UJ
2,4-DINITROTOLUENE	10 U	NA	NA	10 U	NA	NA	10 U	10 U	11 U	NA	10 U
2,6-DICHLOROPHENOL	10 UR	NA	NA	10 U	NA	NA	10 U	10 UR	11 U	NA	10 U
2,6-DINITROTOLUENE	10 U	NA	NA	10 U	NA	NA	10 U	10 U	11 U	NA	10 U
2-CHLORONAPHTHALENE	10 U	NA	NA	10 U	NA	NA	10 U	10 U	11 U	NA	10 U
2-CHLOROPHENOL	10 UR	NA	NA	10 U	NA	NA	10 U	10 UR	11 U	NA	10 U
2-METHYLNAPHTHALENE	10 UJ	NA	NA	10 UJ	NA	NA	10 UJ	10 UJ	11 U	NA	10 U
2-METHYLPHENOL	10 UR	NA	NA	10 U	NA	NA	10 U	10 UR	11 U	NA	10 U
2-NITROANILINE	26 U	NA	NA	25 U	NA	NA	25 U	25 U	27.5 U	NA	26 U
2-NITROPHENOL	10 UR	NA	NA	10 U	NA	NA	10 U	10 UR	11 U	NA	10 U
3&4-METHYLPHENOL	10 UR	NA	NA	10 U	NA	NA	10 U	10 UR	11 UJ	NA	10 U
3,3'-DICHLOROBENZIDINE	10 U	NA	NA	10 U	NA	NA	10 UJ	10 UJ	11 UJ	NA	10 UJ
3-NITROANILINE	26 U	NA	NA	25 U	NA	NA	25 U	25 U	27.5 UJ	NA	26 UJ
4,6-DINITRO-2-METHYLPHENOL	26 UR	NA	NA	25 U	NA	NA	25 U	25 UR	27.5 UJ	NA	26 U
4-BROMOPHENYL PHENYL ETHER	10 U	NA	NA	10 U	NA	NA	10 U	10 U	11 U	NA	10 U
4-CHLORO-3-METHYLPHENOL	26 UR	NA	NA	25 U	NA	NA	25 U	25 UR	27.5 U	NA	26 U
4-CHLOROANILINE	10 U	NA	NA	10 U	NA	NA	10 U	10 U	11 U	NA	10 U
4-CHLOROPHENYL PHENYL ETHER	10 U	NA	NA	10 U	NA	NA	10 U	10 U	11 U	NA	10 U
4-NITROANILINE	26 U	NA	NA	25 U	NA	NA	25 U	25 U	27.5 UJ	NA	26 UJ
4-NITROPHENOL	26 UR	NA	NA	25 U	NA	NA	25 U	25 UR	27.5 UJ	NA	26 UJ
ACENAPHTHENE	10 U	NA	NA	10 U	NA	NA	10 U	10 U	11 U	NA	10 U
ACENAPHTHYLENE	10 U	NA	NA	10 U	NA	NA	10 U	10 U	11 U	NA	10 U
ANTHRACENE	10 U	NA	NA	10 U	NA	NA	10 U	10 U	11 U	NA	10 U
BENZIDINE	52 UR	NA	NA	50 UR	NA	NA	50 UJ	50 UJ	55 UR	NA	53 UR

SHADED - DETECTED
U-NOT DETECTED; J-QUANTITATION APPROXIMATE; R-REJECTED; NA-NOT ANALYZED

SAMPLE ID	DA-MW117B-51508	DA-MW-117B-D1-081110	DA-MW-117B-D2-081110	DA-MW118B-51508	DA-MW-118B-D1-081010	DA-MW-118B-D2-081010	DA-MW119B-51408	DA-MW120B-51408	DA-MW122B-6308-AVG	DA-MW-122-063010	DA-MW123B-6408
LOCATION ID	DA-MW117B	DA-MW117B-D1	DA-MW117B-D2	DA-MW118B	DA-MW118B-D1	DA-MW118B-D2	DA-MW119B	DA-MW120B	DA-MW122		DA-MW123
SAMPLE DATE	05/15/08	08/11/10	08/11/10	05/15/08	08/10/10	08/10/10	05/14/08	05/14/08	06/03/08	06/30/10	06/04/08
SCREEN TOP DEPTH	10.0	19.0	29.0	18.0	27.0	37.0	15.0	10.0	0.0	0.0	2.0
SCREEN BOTTOM DEPTH	40.0	29.0	39.0	49.0	37.0	47.0	45.0	60.0	5.0	5.0	8.0
WELL DEPTH	40	29	39	49	37	47	45	60	5	5	8
SACODE	NORMAL	NORMAL	NORMAL	NORMAL	NORMAL	NORMAL	NORMAL	NORMAL	AVG	NORMAL	NORMAL
QC TYPE	NM	NM	NM	NM	NM	NM	NM	NM	NM	NM	NM
BENZO(A)ANTHRACENE	10 U	NA	NA	10 U	NA	NA	10 U	10 U	11 U	NA	10 U
BENZO(A)PYRENE	10 U	NA	NA	10 U	NA	NA	10 U	10 U	11 U	NA	10 U
BENZO(B)FLUORANTHENE	10 U	NA	NA	10 U	NA	NA	10 U	10 U	11 U	NA	10 U
BENZO(G,H,I)PERYLENE	10 U	NA	NA	10 U	NA	NA	10 U	10 U	11 U	NA	10 U
BENZO(K)FLUORANTHENE	10 U	NA	NA	10 U	NA	NA	10 U	10 U	11 U	NA	10 U
BENZOIC ACID	26 UR	NA	NA	25 UR	NA	NA	25 UR	25 UR	27.5 UR	NA	26 UR
BENZYL ALCOHOL	21 UJ	NA	NA	20 UJ	NA	NA	20 UJ	20 UJ	22 U	NA	110
BIS(2-CHLOROETHOXY)METHANE	10 U	NA	NA	10 U	NA	NA	10 U	10 U	11 U	NA	10 U
BIS(2-CHLOROETHYL)ETHER	10 UJ	NA	NA	10 UJ	NA	NA	10 UJ	10 UJ	11 U	NA	10 U
BIS(2-ETHYLHEXYL)PHTHALATE	10 U	NA	NA	10 U	NA	NA	10 U	10 U	11 U	NA	10 UJ
BUTYL BENZYL PHTHALATE	10 U	NA	NA	10 U	NA	NA	10 U	10 U	11 U	NA	10 U
CARBAZOLE	10 U	NA	NA	10 U	NA	NA	10 U	10 U	11 U	NA	10 U
CHRYSENE	10 U	NA	NA	10 U	NA	NA	10 U	10 U	11 U	NA	10 U
DIBENZO(A,H)ANTHRACENE	10 U	NA	NA	10 U	NA	NA	10 U	10 U	11 U	NA	10 U
DIBENZOFURAN	10 U	NA	NA	10 U	NA	NA	10 U	10 U	11 U	NA	10 U
DIETHYL PHTHALATE	10 U	NA	NA	10 U	NA	NA	10 U	10 U	11 U	NA	10 U
DIMETHYL PHTHALATE	10 U	NA	NA	10 U	NA	NA	10 U	10 U	11 U	NA	10 U
DI-N-BUTYL PHTHALATE	10 U	NA	NA	10 U	NA	NA	10 U	10 U	11 U	NA	10 U
DI-N-OCTYL PHTHALATE	10 U	NA	NA	10 U	NA	NA	10 UJ	10 UJ	11 U	NA	10 U
FLUORANTHENE	10 U	NA	NA	10 U	NA	NA	10 U	10 U	11 U	NA	10 U
FLUORENE	10 U	NA	NA	10 U	NA	NA	10 U	10 U	11 U	NA	10 U
HEXACHLOROBENZENE	10 U	NA	NA	10 U	NA	NA	10 U	10 U	11 U	NA	10 U
HEXACHLOROETHANE	10 U	NA	NA	10 U	NA	NA	10 U	10 U	11 U	NA	10 U
HIGH MOLECULAR WEIGHT PAHS	10 U	NA	NA	10 U	NA	NA	10 U	10 U	11 U	NA	10 U
INDENO(1,2,3-CD)PYRENE	10 U	NA	NA	10 U	NA	NA	10 U	10 U	11 U	NA	10 U
ISOPHORONE	10 U	NA	NA	10 U	NA	NA	10 U	10 U	11 U	NA	10 U
LOW MOLECULAR WEIGHT PAHS	10 UJ	NA	NA	10 UJ	NA	NA	10 UJ	10 UJ	11 U	NA	10 U
NAPHTHALENE	10 U	NA	NA	10 U	NA	NA	10 U	10 U	11 U	NA	10 U
NITROBENZENE	10 U	NA	NA	10 U	NA	NA	10 U	10 U	11 U	NA	10 U
N-NITROSODIMETHYLAMINE	10 U	NA	NA	10 U	NA	NA	10 U	10 U	11 U	NA	10 U
N-NITROSO-DI-N-PROPYLAMINE	10 U	NA	NA	10 U	NA	NA	10 U	10 U	11 U	NA	10 U
N-NITROSODIPHENYLAMINE	10 U	NA	NA	10 U	NA	NA	10 U	10 U	11 U	NA	10 U
N-NITROSOPYRROLIDINE	10 U	NA	NA	10 U	NA	NA	10 U	10 U	11 U	NA	10 U
PENTACHLOROPHENOL	26 UR	NA	NA	25 U	NA	NA	25 U	25 UR	27.5 U	NA	26 U
PHENANTHRENE	10 U	NA	NA	10 U	NA	NA	10 U	10 U	11 U	NA	10 U
PHENOL	10 UR	NA	NA	10 U	NA	NA	10 U	10 UR	11 U	NA	10 U
PYRENE	10 U	NA	NA	10 U	NA	NA	10 U	10 U	11 U	NA	10 U
TOTAL PAHS	10 UJ	NA	NA	10 UJ	NA	NA	10 UJ	10 UJ	11 U	NA	10 U

SHADED - DETECTED
U-NOT DETECTED; J-QUANTITATION APPROXIMATE; R-REJECTED; NA-NOT ANALYZED

SAMPLE ID	DA-MW117B-51508	DA-MW-117B-D1-081110	DA-MW-117B-D2-081110	DA-MW118B-51508	DA-MW-118B-D1-081010	DA-MW-118B-D2-081010	DA-MW119B-51408	DA-MW120B-51408	DA-MW122B-6308-AVG	DA-MW-122-063010	DA-MW123B-6408
LOCATION ID	DA-MW117B	DA-MW117B-D1	DA-MW117B-D2	DA-MW118B	DA-MW118B-D1	DA-MW118B-D2	DA-MW119B	DA-MW120B	DA-MW122		DA-MW123
SAMPLE DATE	05/15/08	08/11/10	08/11/10	05/15/08	08/10/10	08/10/10	05/14/08	05/14/08	06/03/08	06/30/10	06/04/08
SCREEN TOP DEPTH	10.0	19.0	29.0	18.0	27.0	37.0	15.0	10.0	0.0	0.0	2.0
SCREEN BOTTOM DEPTH	40.0	29.0	39.0	49.0	37.0	47.0	45.0	60.0	5.0	5.0	8.0
WELL DEPTH	40	29	39	49	37	47	45	60	5	5	8
SACODE	NORMAL	NORMAL	NORMAL	NORMAL	NORMAL	NORMAL	NORMAL	NORMAL	AVG	NORMAL	NORMAL
QC TYPE	NM	NM	NM	NM	NM	NM	NM	NM	NM	NM	NM
PESTICIDES/PCBS (UG/L)											
4,4'-DDD	0.02 U	NA	NA	0.02 U	NA	NA	0.02 U	0.02 U	0.0225 U	NA	0.02 U
4,4'-DDE	0.02 U	NA	NA	0.02 U	NA	NA	0.02 U	0.02 U	0.0225 U	NA	0.02 U
4,4'-DDT	0.02 U	NA	NA	0.02 U	NA	NA	0.02 U	0.02 U	0.0225 U	NA	0.02 U
ALDRIN	0.01 U	NA	NA	0.01 U	NA	NA	0.01 U	0.01 U	0.011 U	NA	0.01 U
ALPHA-BHC	0.01 U	NA	NA	0.01 U	NA	NA	0.01 U	0.01 U	0.011 U	NA	0.01 U
ALPHA-CHLORDANE	0.01 U	NA	NA	0.01 U	NA	NA	0.01 U	0.01 U	0.011 U	NA	0.01 U
AROCLOR-1016	0.1 U	NA	NA	0.1 U	NA	NA	0.1 U	0.11 U	0.115 U	NA	0.11 U
AROCLOR-1221	0.1 U	NA	NA	0.1 U	NA	NA	0.1 U	0.11 U	0.115 U	NA	0.11 U
AROCLOR-1232	0.1 U	NA	NA	0.1 U	NA	NA	0.1 U	0.11 U	0.115 U	NA	0.11 U
AROCLOR-1242	0.1 U	NA	NA	0.1 U	NA	NA	0.1 U	0.11 U	0.115 U	NA	0.11 U
AROCLOR-1248	0.1 U	NA	NA	0.1 U	NA	NA	0.1 U	0.11 U	0.115 U	NA	0.11 U
AROCLOR-1254	0.1 U	NA	NA	0.1 U	NA	NA	0.1 U	0.11 U	0.115 U	NA	0.11 U
AROCLOR-1260	0.1 U	NA	NA	0.1 U	NA	NA	0.1 U	0.11 U	0.115 U	NA	0.11 U
AROCLOR-1268	0.1 U	NA	NA	0.1 U	NA	NA	0.1 U	0.11 U	0.115 U	NA	0.11 U
BETA-BHC	0.01 U	NA	NA	0.01 U	NA	NA	0.01 U	0.01 U	0.011 U	NA	0.01 U
DELTA-BHC	0.01 U	NA	NA	0.01 U	NA	NA	0.01 U	0.01 U	0.011 U	NA	0.01 U
DIELDRIN	0.02 U	NA	NA	0.02 U	NA	NA	0.02 U	0.02 U	0.0108 J	NA	0.02 U
ENDOSULFAN I	0.01 U	NA	NA	0.01 U	NA	NA	0.01 U	0.01 U	0.011 U	NA	0.01 U
ENDOSULFAN II	0.02 U	NA	NA	0.02 U	NA	NA	0.02 U	0.02 U	0.0225 U	NA	0.02 U
ENDOSULFAN SULFATE	0.02 U	NA	NA	0.02 U	NA	NA	0.02 U	0.02 U	0.0225 U	NA	0.02 U
ENDRIN	0.02 U	NA	NA	0.02 U	NA	NA	0.02 U	0.02 U	0.0225 U	NA	0.02 U
ENDRIN ALDEHYDE	0.02 U	NA	NA	0.02 U	NA	NA	0.02 U	0.02 U	0.0225 U	NA	0.02 U
ENDRIN KETONE	0.02 U	NA	NA	0.02 U	NA	NA	0.02 U	0.02 U	0.0225 U	NA	0.02 U
GAMMA-BHC (LINDANE)	0.01 U	NA	NA	0.01 U	NA	NA	0.01 U	0.01 U	0.011 U	NA	0.01 U
GAMMA-CHLORDANE	0.01 U	NA	NA	0.01 U	NA	NA	0.01 U	0.01 U	0.011 U	NA	0.01 U
HEPTACHLOR	0.01 U	NA	NA	0.01 U	NA	NA	0.01 U	0.01 U	0.011 U	NA	0.01 U
HEPTACHLOR EPOXIDE	0.01 U	NA	NA	0.01 U	NA	NA	0.01 U	0.01 U	0.011 U	NA	0.01 U
METHOXYCHLOR	0.1 U	NA	NA	0.1 U	NA	NA	0.1 U	0.1 U	0.11 U	NA	0.1 U
TOTAL AROCLOR	0.1 U	NA	NA	0.1 U	NA	NA	0.1 U	0.11 U	0.12 U	NA	0.11 U
TOTAL DDD/DDE/DDT	0.02 U	NA	NA	0.02 U	NA	NA	0.02 U	0.02 U	0.022 U	NA	0.02 U
TOXAPHENE	0.2 U	NA	NA	0.2 U	NA	NA	0.2 U	0.2 U	0.225 U	NA	0.2 U
EXPLOSIVES (UG/L)											
1,2-PROPYLENE GLYCOL DINITRATE	NA	NA	NA	NA	NA	NA	NA	NA	NA	0.1 U	NA

SHADED - DETECTED
U-NOT DETECTED; J-QUANTITATION APPROXIMATE; R-REJECTED; NA-NOT ANALYZED

SAMPLE ID	DA-MW117B-51508	DA-MW-117B-D1-081110	DA-MW-117B-D2-081110	DA-MW118B-51508	DA-MW-118B-D1-081010	DA-MW-118B-D2-081010	DA-MW119B-51408	DA-MW120B-51408	DA-MW122B-6308-AVG	DA-MW-122-063010	DA-MW123B-6408
LOCATION ID	DA-MW117B	DA-MW117B-D1	DA-MW117B-D2	DA-MW118B	DA-MW118B-D1	DA-MW118B-D2	DA-MW119B	DA-MW120B	DA-MW122		DA-MW123
SAMPLE DATE	05/15/08	08/11/10	08/11/10	05/15/08	08/10/10	08/10/10	05/14/08	05/14/08	06/03/08	06/30/10	06/04/08
SCREEN TOP DEPTH	10.0	19.0	29.0	18.0	27.0	37.0	15.0	10.0	0.0	0.0	2.0
SCREEN BOTTOM DEPTH	40.0	29.0	39.0	49.0	37.0	47.0	45.0	60.0	5.0	5.0	8.0
WELL DEPTH	40	29	39	49	37	47	45	60	5	5	8
SACODE	NORMAL	NORMAL	NORMAL	NORMAL	NORMAL	NORMAL	NORMAL	NORMAL	AVG	NORMAL	NORMAL
QC TYPE	NM	NM	NM	NM	NM	NM	NM	NM	NM	NM	NM
METALS (UG/L)											
ALUMINUM	15 UJ	NA	NA	32.8 UJ	NA	NA	31.4 J	415	31.6 UJ	NA	31.7 UJ
ANTIMONY	0.78 U	NA	NA	0.78 U	NA	NA	1.2 J	0.78 U	1.36 UJ	NA	1.7 UJ
ARSENIC	9.2	NA	NA	1.69 U	NA	NA	12.4 U	6.6 UJ	1.69 U	NA	1.69 U
BARIUM	8.5	NA	NA	1.2 UJ	NA	NA	24.5	21.7	14.7 J	NA	9.5 J
BERYLLIUM	0.13 U	NA	NA	0.13 U	NA	NA	0.13 U	0.27 J	0.13 U	NA	0.13 U
CADMIUM	0.16 UJ	NA	NA	0.12 UJ	NA	NA	0.04 U	0.04 U	0.05 UJ	NA	0.04 U
CALCIUM	23200	NA	NA	15600	NA	NA	34700	37400	41200	NA	43700
CHROMIUM	0.5 UJ	NA	NA	0.41 U	NA	NA	0.41 U	1.5 J	0.52 UJ	NA	0.57 UJ
COBALT	6.5 J	NA	NA	1.2 UJ	NA	NA	0.98 J	12.9 J	1.15 UJ	NA	0.38 UJ
COPPER	0.75 UJ	NA	NA	0.75 UJ	NA	NA	0.89 J	9.8 J	0.76 UJ	NA	0.75 U
IRON	2620	NA	NA	76.3 UJ	NA	NA	7670	17000	28.2 J	NA	19.4 J
LEAD	0.97 UJ	NA	NA	0.97 UJ	NA	NA	0.97 U	1.5 J	0.97 U	NA	0.97 U
MAGNESIUM	8840	NA	NA	8730	NA	NA	12200	24900	9560	NA	6210
MANGANESE	914	NA	NA	496	NA	NA	454	1620	0.972 J	NA	904
MERCURY	0.03 U	NA	NA	0.03 U	NA	NA	0.03 U	0.03 U	0.03 U	NA	0.03 U
MOLYBDENUM	0.53 UJ	NA	NA	0.56 UJ	NA	NA	1.4 J	0.3 U	4.45 J	NA	0.38 UJ
NICKEL	10 J	NA	NA	1 J	NA	NA	0.42 U	29.2 J	0.87 UJ	NA	0.53 UJ
POTASSIUM	720 UJ	NA	NA	832 UJ	NA	NA	2430	711 J	4200	NA	1300
SELENIUM	0.96 U	NA	NA	0.96 U	NA	NA	0.96 UJ	0.96 UJ	0.96 U	NA	0.96 U
SILVER	0.29 U	NA	NA	0.54 UJ	NA	NA	0.29 U	0.29 U	0.29 U	NA	0.29 U
SODIUM	9900	NA	NA	9800	NA	NA	38200	24600	56400	NA	10300
THALLIUM	1.64 U	NA	NA	1.64 U	NA	NA	2.3 J	1.64 U	1.82 UJ	NA	1.64 U
VANADIUM	0.38 U	NA	NA	0.43 UJ	NA	NA	0.38 U	0.38 U	0.38 U	NA	0.38 U
ZINC	11.1 UJ	NA	NA	4.7 UJ	NA	NA	4.4 J	14.8 J	7.2 UJ	NA	3.4 UJ
DISSOLVED METALS (UG/L)											
ALUMINUM	28.3 UJ	NA	NA	14.6 U	NA	NA	22.1 J	17.6 J	14.6 U	NA	14.6 U
ANTIMONY	1.8 UJ	NA	NA	1.8 UJ	NA	NA	0.78 U	0.78 U	1.25 UJ	NA	1.1 UJ
ARSENIC	9.2	NA	NA	1.69 U	NA	NA	12.4 U	6 UJ	1.69 U	NA	1.69 U
BARIUM	8.3	NA	NA	1.1 UJ	NA	NA	24.1	19.2	14.4	NA	10.7
BERYLLIUM	0.13 U	NA	NA	0.13 U	NA	NA	0.13 U	0.24 J	0.13 U	NA	0.13 U
CADMIUM	0.07 UJ	NA	NA	0.1 UJ	NA	NA	0.04 U	0.04 U	0.05 UJ	NA	0.04 U
CALCIUM	23500	NA	NA	16000	NA	NA	33900	36400	41000	NA	46400
CHROMIUM	0.41 U	NA	NA	0.41 U	NA	NA	0.41 U	0.41 U	0.84 UJ	NA	0.61 UJ
COBALT	6.4 J	NA	NA	1.1 UJ	NA	NA	1 J	12.2 J	1.01 UJ	NA	0.27 UJ
COPPER	0.75 UJ	NA	NA	0.75 UJ	NA	NA	0.75 U	0.75 U	1.55 UJ	NA	0.75 U
IRON	2610	NA	NA	9 U	NA	NA	7280	15000	7.1 J	NA	18.2 J
LEAD	0.97 UJ	NA	NA	0.97 UJ	NA	NA	0.97 U	0.97 U	0.97 U	NA	0.97 U

SHADED - DETECTED
U-NOT DETECTED; J-QUANTITATION APPROXIMATE; R-REJECTED; NA-NOT ANALYZED

SAMPLE ID	DA-MW117B-51508	DA-MW-117B-D1-081110	DA-MW-117B-D2-081110	DA-MW118B-51508	DA-MW-118B-D1-081010	DA-MW-118B-D2-081010	DA-MW119B-51408	DA-MW120B-51408	DA-MW122B-6308-AVG	DA-MW-122-063010	DA-MW123B-6408
LOCATION ID	DA-MW117B	DA-MW117B-D1	DA-MW117B-D2	DA-MW118B	DA-MW118B-D1	DA-MW118B-D2	DA-MW119B	DA-MW120B	DA-MW122		DA-MW123
SAMPLE DATE	05/15/08	08/11/10	08/11/10	05/15/08	08/10/10	08/10/10	05/14/08	05/14/08	06/03/08	06/30/10	06/04/08
SCREEN TOP DEPTH	10.0	19.0	29.0	18.0	27.0	37.0	15.0	10.0	0.0	0.0	2.0
SCREEN BOTTOM DEPTH	40.0	29.0	39.0	49.0	37.0	47.0	45.0	60.0	5.0	5.0	8.0
WELL DEPTH	40	29	39	49	37	47	45	60	5	5	8
SACODE	NORMAL	NORMAL	NORMAL	NORMAL	NORMAL	NORMAL	NORMAL	NORMAL	AVG	NORMAL	NORMAL
QC TYPE	NM	NM	NM	NM	NM	NM	NM	NM	NM	NM	NM
MAGNESIUM	8940	NA	NA	8880	NA	NA	11900	24200	9500	NA	6360
MANGANESE	925	NA	NA	502	NA	NA	439	1570	1.09 UJ	NA	978
MERCURY	0.06 UJ	NA	NA	0.06 UJ	NA	NA	0.03 U	0.03 U	0.03 U	NA	0.03 U
MOLYBDENUM	0.3 U	NA	NA	0.67 UJ	NA	NA	1.3 J	0.3 U	4.45 J	NA	0.3 U
NICKEL	3.5 J	NA	NA	0.76 J	NA	NA	0.42 U	26.7 J	1.1 UJ	NA	0.64 UJ
POTASSIUM	720 UJ	NA	NA	836 UJ	NA	NA	2390	660 J	4320	NA	1380
SELENIUM	0.96 U	NA	NA	0.96 U	NA	NA	0.96 U	0.96 UJ	0.96 U	NA	0.96 U
SILVER	0.29 U	NA	NA	0.29 U	NA	NA	0.29 U	0.29 U	0.352 J	NA	0.29 U
SODIUM	10000	NA	NA	10000	NA	NA	37200	23800	56000	NA	10500
THALLIUM	1.64 U	NA	NA	1.64 U	NA	NA	1.64 U	1.8 J	1.64 U	NA	1.64 U
VANADIUM	0.38 U	NA	NA	0.48 UJ	NA	NA	0.38 U	0.38 U	0.395 UJ	NA	0.38 U
ZINC	11.4 UJ	NA	NA	5.5 UJ	NA	NA	4.6 J	11.7 J	7.65 UJ	NA	4.2 UJ
MISCELLANEOUS PARAMETERS (MG/L)											
AMMONIA-N	0.1 U	0.05 U	0.05 U	0.1 U	NA	NA	1.1	0.1 U	0.1 U	NA	0.1 U
CHLORIDE	NA	NA	NA	NA	NA	NA	NA	NA	NA	NA	NA
NITRATE-N	0.05 U	0.21	0.025 U	0.05 U	NA	NA	0.05 U	0.05 U	1.7	NA	0.34
NITRITE-N	0.05 U	0.025 U	0.025 U	0.05 U	NA	NA	0.05 U	0.05 U	0.05 U	NA	0.014 J
ORTHOPHOSPHATE-P	0.032 J	0.05 U	0.05 U	0.063	NA	NA	0.12	0.046 J	0.043 J	NA	0.049 J
SULFATE	23	18	29	14	NA	NA	5	65	24	NA	26
SULFIDE	1 U	0.8 U	0.8 U	1 U	NA	NA	3.1	1 U	1 U	NA	1 J
TOTAL ORGANIC CARBON	0.41 J	0.59 J	0.57 J	0.28 J	NA	NA	2.1	0.49 J	2.2	NA	1.9
MISCELLANEOUS PARAMETERS (UG/L)											
CYANIDE	NA	NA	NA	NA	NA	NA	NA	NA	NA	NA	NA
METHANE	10 U	NA	NA	10 U	NA	NA	2300	2 J	10 U	NA	4.9 J
FIELD (UG/L)											
FERROUS IRON	2410	NA	NA	0 U	NA	NA	3270	3060	0 U	NA	0 U
PETROLEUM HYDROCARBONS (UG/L)											
EXTRACTABLE TPH (C09-C36)	75 U	NA	NA	79 U	NA	NA	75 U	75 U	82 U	NA	81 U
GASOLINE RANGE ORGANICS	180	NA	NA	10 U	NA	NA	10 U	10 U	10 U	NA	10 U

SHADED - DETECTED
U-NOT DETECTED; J-QUANTITATION APPROXIMATE; R-REJECTED; NA-NOT ANALYZED

SAMPLE ID	DA-MW124B-1020	DA-MW124B-3545	DA-MW-124B-081110	DA-MW125B-2636	DA-MW125B-3646	DA-MW126B-2227	DA-MW126B-4246	DA-MW126B-5055	DA-MW-127B-081010	DA-GW-MW128B-080910	DA-MW-129B-081010-AVG	DA-GW-MW130B-080910
LOCATION ID	DA-MW124B			DA-MW125B		DA-MW126B			DA-MW127B	DA-MW128B	DA-MW129B	DA-MW130B
SAMPLE DATE	08/01/08	08/04/08	08/11/10	07/31/08	08/01/08	07/30/08	07/30/08	07/30/08	08/10/10	08/09/10	08/10/10	08/09/10
SCREEN TOP DEPTH	8.0	8.0	8.0	10.0	10.0	20.0	20.0	20.0	36.0	35.0	8.0	10.5
SCREEN BOTTOM DEPTH	48.8	48.8	48.8	50.5	50.5	60.0	60.0	60.0	46.0	45.0	58.0	60.5
WELL DEPTH	48.75	48.75	48.75	50.5	50.5	60	60	60	46	45	58	60.5
SACODE	NORMAL	NORMAL	NORMAL	NORMAL	NORMAL	NORMAL	NORMAL	NORMAL	NORMAL	NORMAL	AVG	NORMAL
QC TYPE	NM	NM	NM	NM	NM	NM	NM	NM	NM	NM	NM	NM
VOLATILES (UG/L)												
1,1,1,2-TETRACHLOROETHANE	1 U	1 U	NA	1 U	1 U	1 U	1 U	1 U	0.5 U	0.5 U	0.5 U	0.5 U
1,1,1-TRICHLOROETHANE	1 U	1 U	NA	1 U	1 U	1 U	1 U	1 U	0.5 U	1 J	140	10
1,1,2,2-TETRACHLOROETHANE	1 U	1 U	NA	1 U	1 U	1 U	1 U	1 U	0.5 U	0.5 U	0.5 U	0.5 U
1,1,2-TRICHLOROETHANE	1 U	1 U	NA	1 U	1 U	1 U	1 U	1 U	0.5 U	0.48 J	0.5 U	0.5 U
1,1-DICHLOROETHANE	1	18	NA	1 U	0.5 J	1 U	1 U	1 U	0.5 U	1.6	64.5	9.2
1,1-DICHLOROETHENE	1 U	0.8 J	NA	1 U	1 U	1 U	1 U	1 U	0.5 U	13	6.15	1.3
1,1-DICHLOROPROPENE	1 U	1 U	NA	1 U	1 U	1 U	1 U	1 U	0.5 U	0.5 U	0.5 U	0.5 U
1,2,3-TRICHLOROBENZENE	1 U	1 U	NA	1 U	1 U	1 U	1 U	1 U	0.5 U	0.5 U	0.5 U	0.5 U
1,2,3-TRICHLOROPROPANE	1 U	1 U	NA	1 U	1 U	1 U	1 U	1 U	0.5 U	0.5 U	0.5 U	0.5 U
1,2,4-TRICHLOROBENZENE	1 U	1 U	NA	1 U	1 U	1 U	1 U	1 U	0.5 U	0.5 U	0.5 U	0.5 U
1,2,4-TRIMETHYLBENZENE	1 U	1 U	NA	0.3 J	1 U	1 U	1 U	1 U	0.5 U	0.5 U	0.5 U	0.5 U
1,2-DIBROMO-3-CHLOROPROPANE	1 U	1 U	NA	1 U	1 U	1 UJ	1 UJ	1 U	0.75 UJ	0.75 U	0.75 U	0.75 U
1,2-DIBROMOETHANE	1 U	1 U	NA	1 U	1 U	1 U	1 U	1 U	0.5 U	0.5 U	0.5 U	0.5 U
1,2-DICHLOROBENZENE	1 U	1 U	NA	1 U	1 U	1 U	1 U	1 U	0.5 U	0.5 U	0.5 U	0.5 U
1,2-DICHLOROETHANE	1 U	1 U	NA	1 U	1 U	1 U	1 U	1 U	0.5 U	0.5 U	0.5 U	0.5 U
1,2-DICHLOROPROPANE	1 U	1 U	NA	1 U	1 U	1 U	1 U	1 U	0.5 U	0.5 U	0.5 U	0.5 U
1,3,5-TRIMETHYLBENZENE	1 U	1 U	NA	1 U	1 U	1 U	1 U	1 U	0.5 U	0.5 U	0.5 U	0.5 U
1,3-DICHLOROBENZENE	1 U	1 U	NA	1 U	1 U	1 U	1 U	1 U	0.5 U	0.5 U	0.5 U	0.5 U
1,3-DICHLOROPROPANE	1 U	1 U	NA	1 U	1 U	1 U	1 U	1 U	0.5 U	0.5 U	0.5 U	0.5 U
1,4-DICHLOROBENZENE	0.3 J	1 U	NA	1 U	1 U	1 U	1 U	1 U	0.5 U	0.5 U	0.5 U	0.5 U
2,2-DICHLOROPROPANE	1 U	1 U	NA	1 U	1 U	1 U	1 U	1 U	0.5 U	0.5 U	0.5 U	0.5 U
2-BUTANONE	5 U	5 U	NA	5 U	5 U	5 U	5 U	5 U	2.5 U	2.5 U	2.5 U	2.5 U
2-CHLOROTOLUENE	1 U	1 U	NA	1 U	1 U	1 U	1 U	1 U	0.5 U	0.5 U	0.5 U	0.5 U
2-HEXANONE	5 U	5 U	NA	5 U	5 U	5 U	5 U	5 U	2.5 U	2.5 U	2.5 U	2.5 U
4-CHLOROTOLUENE	1 U	1 U	NA	1 U	1 U	1 U	1 U	1 U	0.5 U	0.5 U	0.5 U	0.5 U
4-ISOPROPYLTOLUENE	1 U	1 U	NA	1 U	1 U	1 U	1 U	1 U	0.5 U	0.5 U	0.5 U	0.5 U
4-METHYL-2-PENTANONE	5 U	5 U	NA	5 U	5 U	5 U	5 U	5 U	2.5 U	2.5 U	2.5 U	2.5 U
ACETONE	46 U	49 U	NA	11 U	5 U	7 U	5 U	5 U	2.5 UJ	2.5 U	2.5 U	2.5 U
BENZENE	1 U	0.4 J	NA	1 U	1 U	1 U	1 U	1 U	0.5 U	0.5 U	0.5 U	0.5 U
BROMOBENZENE	1 U	1 U	NA	1 U	1 U	1 U	1 U	1 U	0.5 U	0.5 U	0.5 U	0.5 U
BROMOCHLOROMETHANE	1 U	1 U	NA	1 U	1 U	1 U	1 U	1 U	0.5 U	0.5 U	0.5 U	0.5 U
BROMODICHLOROMETHANE	1 U	1 U	NA	1 U	1 U	1 U	1 U	1 U	0.5 U	0.5 U	0.5 U	0.5 U
BROMOFORM	1 U	1 U	NA	1 U	1 U	1 U	1 U	1 U	0.5 UJ	0.5 UJ	0.5 UJ	0.5 UJ

SHADED - DETECTED
U-NOT DETECTED; J-QUANTITATION APPROXIMATE; R-REJECTED; NA-NOT ANALYZED

SAMPLE ID	DA-MW124B-1020	DA-MW124B-3545	DA-MW-124B-081110	DA-MW125B-2636	DA-MW125B-3646	DA-MW126B-2227	DA-MW126B-4246	DA-MW126B-5055	DA-MW-127B-081010	DA-GW-MW128B-080910	DA-MW-129B-081010-AVG	DA-GW-MW130B-080910
LOCATION ID	DA-MW124B			DA-MW125B		DA-MW126B			DA-MW127B	DA-MW128B	DA-MW129B	DA-MW130B
SAMPLE DATE	08/01/08	08/04/08	08/11/10	07/31/08	08/01/08	07/30/08	07/30/08	07/30/08	08/10/10	08/09/10	08/10/10	08/09/10
SCREEN TOP DEPTH	8.0	8.0	8.0	10.0	10.0	20.0	20.0	20.0	36.0	35.0	8.0	10.5
SCREEN BOTTOM DEPTH	48.8	48.8	48.8	50.5	50.5	60.0	60.0	60.0	46.0	45.0	58.0	60.5
WELL DEPTH	48.75	48.75	48.75	50.5	50.5	60	60	60	46	45	58	60.5
SACODE	NORMAL	NORMAL	NORMAL	NORMAL	NORMAL	NORMAL	NORMAL	NORMAL	NORMAL	NORMAL	AVG	NORMAL
QC TYPE	NM	NM	NM	NM	NM	NM	NM	NM	NM	NM	NM	NM
BROMOMETHANE	2 U	2 U	NA	2 U	2 U	2 U	2 U	2	1 U	1 U	1 U	1 U
BTEX	5	18.4 J	NA	12	11	2	4	2	0.562 U	0.562 U	0.562 U	0.562 U
CARBON DISULFIDE	1 U	1 U	NA	1 U	1 U	1 U	1 U	1 U	0.5 U	0.5 U	0.5 U	0.5 U
CARBON TETRACHLORIDE	1 U	1 U	NA	1 U	1 U	1 U	1 U	1 U	0.5 U	0.5 U	0.5 U	0.5 U
CHLOROBENZENE	1 U	1 U	NA	1 U	1 U	1 U	1 U	1 U	0.5 U	0.5 U	0.5 U	0.5 U
CHLORODIBROMOMETHANE	1 U	1 U	NA	1 U	1 U	1 U	1 U	1 U	0.5 U	0.5 U	0.5 U	0.5 U
CHLOROETHANE	2 U	1 J	NA	2 U	2 U	2 U	2 U	2 U	1 U	1 U	75.5	1 U
CHLOROFORM	1 U	1 U	NA	1 U	1 U	7	1 U	1 U	0.5 U	0.5 U	0.5 U	0.5 U
CHLOROMETHANE	2 U	3 U	NA	2 U	2 U	2 U	2 U	16	1 U	1 U	1 U	1 U
CIS-1,2-DICHLOROETHENE	5	26	NA	4	3	1 U	1 U	1 U	0.53 J	26	0.76 J	0.5 U
CIS-1,3-DICHLOROPROPENE	1 U	1 U	NA	1 U	1 U	1 U	1 U	1 U	0.5 U	0.5 U	0.5 U	0.5 U
DIBROMOMETHANE	1 U	1 U	NA	1 U	1 U	1 U	1 U	1 U	0.5 U	0.5 U	0.5 U	0.5 U
DICHLORODIFLUOROMETHANE	2 U	2 U	NA	2 U	2 U	2 U	2 U	2 U	1 U	1 U	1 U	1 U
ETHYLBENZENE	1 U	1 U	NA	1 U	1 U	1 U	1 U	1 U	0.5 U	0.5 U	0.5 U	0.5 U
HEXACHLOROBUTADIENE	1 U	1 U	NA	1 U	1 U	1 U	1 U	1 U	0.5 U	0.5 U	0.5 U	0.5 U
ISOPROPYLBENZENE	1 U	1 U	NA	1 U	1 U	1 U	1 U	1 U	0.5 U	0.5 U	0.5 U	0.5 U
M+P-XYLENES	2 U	2 U	NA	2 U	2 U	2 U	2 U	2 U	1 U	1 U	1 U	1 U
METHYL TERT-BUTYL ETHER	1 U	1 U	NA	1 U	1 U	1 U	1 U	1 U	0.5 U	0.5 UJ	0.5 UJ	0.5 UJ
METHYLENE CHLORIDE	5 U	5 U	NA	5 U	5 U	5 U	5 U	5 U	2.5 U	2.5 U	2.5 U	2.5 U
N-BUTYLBENZENE	1 U	1 U	NA	1 U	1 U	1 U	1 U	1 U	0.5 U	0.5 U	0.5 U	0.5 U
N-PROPYLBENZENE	1 U	1 U	NA	1 U	1 U	1 U	1 U	1 U	0.5 U	0.5 U	0.5 U	0.5 U
O-XYLENE	1 U	1 U	NA	1 U	1 U	1 U	1 U	1 U	0.5 U	0.5 U	0.5 U	0.5 U
SEC-BUTYLBENZENE	1 U	0.4 J	NA	1 U	1 U	1 U	1 U	1 U	0.5 U	0.5 U	0.5 U	0.5 U
STYRENE	1 U	1 U	NA	1 U	1 U	1 U	1 U	1 U	0.5 U	0.5 U	0.5 U	0.5 U
TERT-BUTYLBENZENE	1 U	0.4 J	NA	1 U	1 U	1 U	1 U	1 U	0.5 U	0.5 U	0.5 U	0.5 U
TETRACHLOROETHENE	1 U	1 U	NA	12	8	1 U	1 U	1 U	0.5 U	0.5 U	0.5 U	0.5 U
TOLUENE	5	18	NA	12	11	2	4	2	0.5 U	0.5 U	0.5 U	0.5 U
TOTAL 1,2-DICHLOROETHENE	5.5 J	29	NA	4	3	1 U	1 U	1 U	0.53 J	29.7	0.76 J	0.5 U
TOTAL CHLORINATED ETHENES	8.5 J	64	NA	20.3 J	13	1.2 U	1.2 U	1.2 U	6.02 J	1240 J	11.4 J	2.01 J
TOTAL CHLORINATED VOCS	9.8 J	83.8 J	NA	20.3 J	13.5 J	7 J	1.3 UJ	16	6.02 J	1250 J	291 J	21.2 J
TOTAL XYLENES	1.5 U	1.5 U	NA	1.5 U	1.5 U	1.5 U	1.5 U	1.5 U	0.75 U	0.75 U	0.75 U	0.75 U
TRANS-1,2-DICHLOROETHENE	0.5 J	3	NA	1 U	1 U	1 U	1 U	1 U	0.5 U	3.7	0.5 U	0.5 U
TRANS-1,3-DICHLOROPROPENE	1 U	1 U	NA	1 U	1 U	1 U	1 U	1 U	0.5 U	0.5 U	0.5 U	0.5 U
TRICHLOROETHENE	2	16	NA	4	2	1 U	1 U	1 U	4.8	1200	4.5	0.71 J
TRICHLOROFLUOROMETHANE	2 U	2 U	NA	2 U	2 U	2 U	2 U	2 U	1 U	1 U	1 U	1 U
VINYL CHLORIDE	1 J	19	NA	0.3 J	2 U	2 U	2 U	2 U	0.69 J	0.31 J	1 U	1 U

SHADED - DETECTED
U-NOT DETECTED; J-QUANTITATION APPROXIMATE; R-REJECTED; NA-NOT ANALYZED

SAMPLE ID	DA-MW124B-1020	DA-MW124B-3545	DA-MW-124B-081110	DA-MW125B-2636	DA-MW125B-3646	DA-MW126B-2227	DA-MW126B-4246	DA-MW126B-5055	DA-MW-127B-081010	DA-GW-MW128B-080910	DA-MW-129B-081010-AVG	DA-GW-MW130B-080910
LOCATION ID	DA-MW124B			DA-MW125B		DA-MW126B			DA-MW127B	DA-MW128B	DA-MW129B	DA-MW130B
SAMPLE DATE	08/01/08	08/04/08	08/11/10	07/31/08	08/01/08	07/30/08	07/30/08	07/30/08	08/10/10	08/09/10	08/10/10	08/09/10
SCREEN TOP DEPTH	8.0	8.0	8.0	10.0	10.0	20.0	20.0	20.0	36.0	35.0	8.0	10.5
SCREEN BOTTOM DEPTH	48.8	48.8	48.8	50.5	50.5	60.0	60.0	60.0	46.0	45.0	58.0	60.5
WELL DEPTH	48.75	48.75	48.75	50.5	50.5	60	60	60	46	45	58	60.5
SACODE	NORMAL	NORMAL	NORMAL	NORMAL	NORMAL	NORMAL	NORMAL	NORMAL	NORMAL	NORMAL	AVG	NORMAL
QC TYPE	NM	NM	NM	NM	NM	NM	NM	NM	NM	NM	NM	NM
VOLATILE GASES (UG/L)												
ETHANE	NA	NA	NA	NA	NA	NA	NA	NA	2 UJ	2 U	2 U	NA
ETHENE	NA	NA	NA	NA	NA	NA	NA	NA	2 UJ	2 U	2 U	NA
METHANE	NA	NA	NA	NA	NA	NA	NA	NA	16 J	1.7 J	79.5	NA
SEMIVOLATILES (UG/L)												
1,1-BIPHENYL	10 U	10 U	NA	10 U	10 U	10 U	10 U	10 U	NA	NA	NA	NA
1,2-DIPHENYLHYDRAZINE	20 U	20 U	NA	20 U	20 U	20 U	20 U	20 U	NA	NA	NA	NA
1,4-DIOXANE	NA	NA	NA	NA	NA	NA	NA	NA	0.22 J	0.42 J	0.665 J	NA
2,2'-OXYBIS(1-CHLOROPROPANE)	10 U	10 U	NA	10 U	10 U	10 U	10 U	10 U	NA	NA	NA	NA
2,4,5-TRICHLOROPHENOL	25 U	25 UR	NA	25 U	25 U	25 U	24 UJ	25 U	NA	NA	NA	NA
2,4,6-TRICHLOROPHENOL	10 U	10 UR	NA	10 U	10 U	10 U	9 UJ	10 U	NA	NA	NA	NA
2,4-DICHLOROPHENOL	10 U	10 UR	NA	10 U	10 U	10 U	9 UJ	10 U	NA	NA	NA	NA
2,4-DIMETHYLPHENOL	10 U	10 UR	NA	10 U	10 U	10 U	9 UJ	10 U	NA	NA	NA	NA
2,4-DINITROPHENOL	25 U	25 UR	NA	25 U	25 U	25 U	24 UJ	25 U	NA	NA	NA	NA
2,4-DINITROTOLUENE	10 U	10 U	NA	10 U	10 U	10 U	10 U	10 U	NA	NA	NA	NA
2,6-DICHLOROPHENOL	10 U	10 UR	NA	10 U	10 U	10 U	9 UJ	10 U	NA	NA	NA	NA
2,6-DINITROTOLUENE	10 U	10 U	NA	10 U	10 U	10 U	10 U	10 U	NA	NA	NA	NA
2-CHLORONAPHTHALENE	10 U	10 U	NA	10 U	10 U	10 U	10 U	10 U	NA	NA	NA	NA
2-CHLOROPHENOL	10 U	10 UR	NA	10 U	10 U	10 U	9 UJ	10 U	NA	NA	NA	NA
2-METHYLNAPHTHALENE	10 U	10 U	NA	10 U	10 U	10 U	10 U	10 U	NA	NA	NA	NA
2-METHYLPHENOL	10 U	10 UR	NA	10 U	10 U	10 U	9 UJ	10 U	NA	NA	NA	NA
2-NITROANILINE	25 U	25 U	NA	25 U	25 U	25 U	25 U	25 U	NA	NA	NA	NA
2-NITROPHENOL	10 U	10 UR	NA	10 U	10 U	10 U	9 UJ	10 U	NA	NA	NA	NA
3&4-METHYLPHENOL	10 U	10 UR	NA	10 U	10 U	10 U	9 UJ	10 U	NA	NA	NA	NA
3,3'-DICHLOROBENZIDINE	10 UJ	10 UR	NA	10 UJ	10 UJ	10 UJ	10 UJ	10 UJ	NA	NA	NA	NA
3-NITROANILINE	25 UJ	25 UJ	NA	25 UJ	25 UJ	25 UJ	25 UJ	25 UJ	NA	NA	NA	NA
4,6-DINITRO-2-METHYLPHENOL	25 U	25 UR	NA	25 U	25 U	25 U	24 UJ	25 U	NA	NA	NA	NA
4-BROMOPHENYL PHENYL ETHER	10 U	10 U	NA	10 U	10 U	10 U	10 U	10 U	NA	NA	NA	NA
4-CHLORO-3-METHYLPHENOL	10 U	10 UR	NA	10 U	10 U	10 U	9 UJ	10 U	NA	NA	NA	NA
4-CHLOROANILINE	10 U	10 UR	NA	10 U	10 U	10 U	10 U	10 U	NA	NA	NA	NA
4-CHLOROPHENYL PHENYL ETHER	10 U	10 U	NA	10 U	10 U	10 U	10 U	10 U	NA	NA	NA	NA
4-NITROANILINE	25 UJ	25 UJ	NA	25 UJ	25 UJ	25 UJ	25 UJ	25 UJ	NA	NA	NA	NA
4-NITROPHENOL	25 U	25 UR	NA	25 U	25 U	25 U	24 UJ	25 U	NA	NA	NA	NA
ACENAPHTHENE	10 U	10 U	NA	10 U	10 U	10 U	10 U	10 U	NA	NA	NA	NA
ACENAPHTHYLENE	10 U	10 U	NA	10 U	10 U	10 U	10 U	10 U	NA	NA	NA	NA
ANTHRACENE	10 U	10 U	NA	10 U	10 U	10 U	10 U	10 U	NA	NA	NA	NA
BENZIDINE	50 UR	50 UR	NA	50 UR	50 UR	50 UR	50 UR	50 UR	NA	NA	NA	NA

SHADED - DETECTED
U-NOT DETECTED; J-QUANTITATION APPROXIMATE; R-REJECTED; NA-NOT ANALYZED

SAMPLE ID	DA-MW124B-1020	DA-MW124B-3545	DA-MW-124B-081110	DA-MW125B-2636	DA-MW125B-3646	DA-MW126B-2227	DA-MW126B-4246	DA-MW126B-5055	DA-MW-127B-081010	DA-GW-MW128B-080910	DA-MW-129B-081010-AVG	DA-GW-MW130B-080910
LOCATION ID	DA-MW124B			DA-MW125B		DA-MW126B			DA-MW127B	DA-MW128B	DA-MW129B	DA-MW130B
SAMPLE DATE	08/01/08	08/04/08	08/11/10	07/31/08	08/01/08	07/30/08	07/30/08	07/30/08	08/10/10	08/09/10	08/10/10	08/09/10
SCREEN TOP DEPTH	8.0	8.0	8.0	10.0	10.0	20.0	20.0	20.0	36.0	35.0	8.0	10.5
SCREEN BOTTOM DEPTH	48.8	48.8	48.8	50.5	50.5	60.0	60.0	60.0	46.0	45.0	58.0	60.5
WELL DEPTH	48.75	48.75	48.75	50.5	50.5	60	60	60	46	45	58	60.5
SACODE	NORMAL	NORMAL	NORMAL	NORMAL	NORMAL	NORMAL	NORMAL	NORMAL	NORMAL	NORMAL	AVG	NORMAL
QC TYPE	NM	NM	NM	NM	NM	NM	NM	NM	NM	NM	NM	NM
BENZO(A)ANTHRACENE	10 U	10 U	NA	10 U	10 U	10 U	10 U	10 U	NA	NA	NA	NA
BENZO(A)PYRENE	10 U	10 U	NA	10 U	10 U	10 U	10 U	10 U	NA	NA	NA	NA
BENZO(B)FLUORANTHENE	10 U	10 U	NA	10 U	10 U	10 U	10 U	10 U	NA	NA	NA	NA
BENZO(G,H,I)PERYLENE	10 U	10 U	NA	10 U	10 U	10 U	10 U	10 U	NA	NA	NA	NA
BENZO(K)FLUORANTHENE	10 U	4 J	NA	10 U	10 U	10 U	10 U	10 U	NA	NA	NA	NA
BENZOIC ACID	25 UR	25 UR	NA	25 UR	25 UR	25 UR	24 UR	25 UR	NA	NA	NA	NA
BENZYL ALCOHOL	20 U	20 U	NA	20 U	20 U	20 U	20 U	20 U	NA	NA	NA	NA
BIS(2-CHLOROETHOXY)METHANE	10 U	10 U	NA	10 U	10 U	10 U	10 U	10 U	NA	NA	NA	NA
BIS(2-CHLOROETHYL)ETHER	10 U	10 U	NA	10 U	10 U	10 U	10 U	10 U	NA	NA	NA	NA
BIS(2-ETHYLHEXYL)PHTHALATE	10 U	10 U	NA	10 U	10 U	10 U	10 U	10 U	NA	NA	NA	NA
BUTYL BENZYL PHTHALATE	10 U	10 U	NA	10 U	10 U	10 U	10 U	10 U	NA	NA	NA	NA
CARBAZOLE	10 UJ	10 U	NA	10 UJ	10 UJ	10 UJ	10 UJ	10 UJ	NA	NA	NA	NA
CHRYSENE	10 U	10 U	NA	10 U	10 U	10 U	10 U	10 U	NA	NA	NA	NA
DIBENZO(A,H)ANTHRACENE	10 U	10 U	NA	10 U	10 U	10 U	10 U	10 U	NA	NA	NA	NA
DIBENZOFURAN	10 U	10 U	NA	10 U	10 U	10 U	10 U	10 U	NA	NA	NA	NA
DIETHYL PHTHALATE	10 U	10 U	NA	10 U	10 U	10 U	10 U	10 U	NA	NA	NA	NA
DIMETHYL PHTHALATE	10 U	10 U	NA	10 U	10 U	10 U	10 U	10 U	NA	NA	NA	NA
DI-N-BUTYL PHTHALATE	3 J	5 J	NA	10 U	10 U	10 U	10 U	10 U	NA	NA	NA	NA
DI-N-OCTYL PHTHALATE	10 U	10 U	NA	10 U	10 U	10 U	10 U	10 U	NA	NA	NA	NA
FLUORANTHENE	10 U	10 U	NA	10 U	10 U	10 U	10 U	10 U	NA	NA	NA	NA
FLUORENE	10 U	10 U	NA	10 U	10 U	10 U	10 U	10 U	NA	NA	NA	NA
HEXACHLOROBENZENE	10 U	10 U	NA	10 U	10 U	10 U	10 U	10 U	NA	NA	NA	NA
HEXACHLOROETHANE	10 U	10 U	NA	10 U	10 U	10 U	10 U	10 U	NA	NA	NA	NA
HIGH MOLECULAR WEIGHT PAHS	10 U	4 J	NA	10 U	10 U	10 U	10 U	10 U	NA	NA	NA	NA
INDENO(1,2,3-CD)PYRENE	10 U	10 U	NA	10 U	10 U	10 U	10 U	10 U	NA	NA	NA	NA
ISOPHORONE	10 U	10 U	NA	10 U	10 U	10 U	10 U	10 U	NA	NA	NA	NA
LOW MOLECULAR WEIGHT PAHS	10 U	10 U	NA	10 U	10 U	10 U	10 U	10 U	NA	NA	NA	NA
NAPHTHALENE	10 U	10 U	NA	10 U	10 U	10 U	10 U	10 U	NA	NA	NA	NA
NITROBENZENE	10 U	10 U	NA	10 U	10 U	10 U	10 U	10 U	NA	NA	NA	NA
N-NITROSODIMETHYLAMINE	10 U	10 U	NA	10 U	10 U	10 U	10 U	10 U	NA	NA	NA	NA
N-NITROSO-DI-N-PROPYLAMINE	10 U	10 U	NA	10 U	10 U	10 U	10 U	10 U	NA	NA	NA	NA
N-NITROSODIPHENYLAMINE	10 U	10 U	NA	10 U	10 U	10 U	10 U	10 U	NA	NA	NA	NA
N-NITROSOPYRROLIDINE	10 U	10 U	NA	10 U	10 U	10 U	10 U	10 U	NA	NA	NA	NA
PENTACHLOROPHENOL	25 U	25 UR	NA	25 U	25 U	25 U	24 UJ	25 U	NA	NA	NA	NA
PHENANTHRENE	10 U	10 U	NA	10 U	10 U	10 U	10 U	10 U	NA	NA	NA	NA
PHENOL	10 U	10 UR	NA	10 U	10 U	10 U	9 UJ	10 U	NA	NA	NA	NA
PYRENE	10 U	10 U	NA	10 U	10 U	10 U	10 U	10 U	NA	NA	NA	NA
TOTAL PAHS	10 U	4 J	NA	10 U	10 U	10 U	10 U	10 U	NA	NA	NA	NA

SHADED - DETECTED
U-NOT DETECTED; J-QUANTITATION APPROXIMATE; R-REJECTED; NA-NOT ANALYZED

SAMPLE ID	DA-MW124B-1020	DA-MW124B-3545	DA-MW-124B-081110	DA-MW125B-2636	DA-MW125B-3646	DA-MW126B-2227	DA-MW126B-4246	DA-MW126B-5055	DA-MW-127B-081010	DA-GW-MW128B-080910	DA-MW-129B-081010-AVG	DA-GW-MW130B-080910
LOCATION ID	DA-MW124B			DA-MW125B		DA-MW126B			DA-MW127B	DA-MW128B	DA-MW129B	DA-MW130B
SAMPLE DATE	08/01/08	08/04/08	08/11/10	07/31/08	08/01/08	07/30/08	07/30/08	07/30/08	08/10/10	08/09/10	08/10/10	08/09/10
SCREEN TOP DEPTH	8.0	8.0	8.0	10.0	10.0	20.0	20.0	20.0	36.0	35.0	8.0	10.5
SCREEN BOTTOM DEPTH	48.8	48.8	48.8	50.5	50.5	60.0	60.0	60.0	46.0	45.0	58.0	60.5
WELL DEPTH	48.75	48.75	48.75	50.5	50.5	60	60	60	46	45	58	60.5
SACODE	NORMAL	NORMAL	NORMAL	NORMAL	NORMAL	NORMAL	NORMAL	NORMAL	NORMAL	NORMAL	AVG	NORMAL
QC TYPE	NM	NM	NM	NM	NM	NM	NM	NM	NM	NM	NM	NM
PESTICIDES/PCBS (UG/L)												
4,4'-DDD	NA	NA	NA	NA	NA	NA	NA	NA	NA	NA	NA	NA
4,4'-DDE	NA	NA	NA	NA	NA	NA	NA	NA	NA	NA	NA	NA
4,4'-DDT	NA	NA	NA	NA	NA	NA	NA	NA	NA	NA	NA	NA
ALDRIN	NA	NA	NA	NA	NA	NA	NA	NA	NA	NA	NA	NA
ALPHA-BHC	NA	NA	NA	NA	NA	NA	NA	NA	NA	NA	NA	NA
ALPHA-CHLORDANE	NA	NA	NA	NA	NA	NA	NA	NA	NA	NA	NA	NA
AROCLOR-1016	0.1 U	0.1 U	NA	0.1 UJ	0.1 UJ	0.1 U	0.1 U	0.1 UJ	NA	NA	NA	NA
AROCLOR-1221	0.1 U	0.1 U	NA	0.1 U	0.1 UJ	0.1 U	0.1 U	0.1 U	NA	NA	NA	NA
AROCLOR-1232	0.1 U	0.1 U	NA	0.1 U	0.1 UJ	0.1 U	0.1 U	0.1 U	NA	NA	NA	NA
AROCLOR-1242	0.1 U	0.1 U	NA	0.1 U	0.1 UJ	0.1 U	0.1 U	0.1 U	NA	NA	NA	NA
AROCLOR-1248	0.1 U	0.1 U	NA	0.1 U	0.1 UJ	0.1 U	0.1 U	0.1 U	NA	NA	NA	NA
AROCLOR-1254	0.1 U	0.1 U	NA	0.1 U	0.1 UJ	0.1 U	0.1 U	0.1 U	NA	NA	NA	NA
AROCLOR-1260	0.1 U	0.1 U	NA	0.1 UJ	0.1 UJ	0.1 U	0.1 U	0.1 UJ	NA	NA	NA	NA
AROCLOR-1268	0.1 U	0.1 U	NA	0.1 U	0.1 UJ	0.1 U	0.1 U	0.1 U	NA	NA	NA	NA
BETA-BHC	NA	NA	NA	NA	NA	NA	NA	NA	NA	NA	NA	NA
DELTA-BHC	NA	NA	NA	NA	NA	NA	NA	NA	NA	NA	NA	NA
DIELDRIN	NA	NA	NA	NA	NA	NA	NA	NA	NA	NA	NA	NA
ENDOSULFAN I	NA	NA	NA	NA	NA	NA	NA	NA	NA	NA	NA	NA
ENDOSULFAN II	NA	NA	NA	NA	NA	NA	NA	NA	NA	NA	NA	NA
ENDOSULFAN SULFATE	NA	NA	NA	NA	NA	NA	NA	NA	NA	NA	NA	NA
ENDRIN	NA	NA	NA	NA	NA	NA	NA	NA	NA	NA	NA	NA
ENDRIN ALDEHYDE	NA	NA	NA	NA	NA	NA	NA	NA	NA	NA	NA	NA
ENDRIN KETONE	NA	NA	NA	NA	NA	NA	NA	NA	NA	NA	NA	NA
GAMMA-BHC (LINDANE)	NA	NA	NA	NA	NA	NA	NA	NA	NA	NA	NA	NA
GAMMA-CHLORDANE	NA	NA	NA	NA	NA	NA	NA	NA	NA	NA	NA	NA
HEPTACHLOR	NA	NA	NA	NA	NA	NA	NA	NA	NA	NA	NA	NA
HEPTACHLOR EPOXIDE	NA	NA	NA	NA	NA	NA	NA	NA	NA	NA	NA	NA
METHOXYCHLOR	NA	NA	NA	NA	NA	NA	NA	NA	NA	NA	NA	NA
TOTAL AROCLOR	0.1 U	0.1 U	NA	0.1 UJ	0.1 UJ	0.1 U	0.1 U	0.1 UJ	NA	NA	NA	NA
TOTAL DDD/DDE/DDT	NA	NA	NA	NA	NA	NA	NA	NA	NA	NA	NA	NA
TOXAPHENE	NA	NA	NA	NA	NA	NA	NA	NA	NA	NA	NA	NA
EXPLOSIVES (UG/L)												
1,2-PROPYLENE GLYCOL DINITRATE	NA	NA	0.1 U	NA	NA	NA	NA	NA	NA	NA	NA	0.1 U

SHADED - DETECTED
U-NOT DETECTED; J-QUANTITATION APPROXIMATE; R-REJECTED; NA-NOT ANALYZED

SAMPLE ID	DA-MW124B-1020	DA-MW124B-3545	DA-MW-124B-081110	DA-MW125B-2636	DA-MW125B-3646	DA-MW126B-2227	DA-MW126B-4246	DA-MW126B-5055	DA-MW-127B-081010	DA-GW-MW128B-080910	DA-MW-129B-081010-AVG	DA-GW-MW130B-080910
LOCATION ID	DA-MW124B			DA-MW125B		DA-MW126B			DA-MW127B	DA-MW128B	DA-MW129B	DA-MW130B
SAMPLE DATE	08/01/08	08/04/08	08/11/10	07/31/08	08/01/08	07/30/08	07/30/08	07/30/08	08/10/10	08/09/10	08/10/10	08/09/10
SCREEN TOP DEPTH	8.0	8.0	8.0	10.0	10.0	20.0	20.0	20.0	36.0	35.0	8.0	10.5
SCREEN BOTTOM DEPTH	48.8	48.8	48.8	50.5	50.5	60.0	60.0	60.0	46.0	45.0	58.0	60.5
WELL DEPTH	48.75	48.75	48.75	50.5	50.5	60	60	60	46	45	58	60.5
SACODE	NORMAL	NORMAL	NORMAL	NORMAL	NORMAL	NORMAL	NORMAL	NORMAL	NORMAL	NORMAL	AVG	NORMAL
QC TYPE	NM	NM	NM	NM	NM	NM	NM	NM	NM	NM	NM	NM
METALS (UG/L)												
ALUMINUM	NA	NA	NA	NA	NA	NA	NA	NA	NA	NA	NA	NA
ANTIMONY	NA	NA	NA	NA	NA	NA	NA	NA	NA	NA	NA	NA
ARSENIC	NA	NA	NA	NA	NA	NA	NA	NA	NA	NA	NA	NA
BARIUM	NA	NA	NA	NA	NA	NA	NA	NA	NA	NA	NA	NA
BERYLLIUM	NA	NA	NA	NA	NA	NA	NA	NA	NA	NA	NA	NA
CADMIUM	NA	NA	NA	NA	NA	NA	NA	NA	NA	NA	NA	NA
CALCIUM	NA	NA	NA	NA	NA	NA	NA	NA	NA	NA	NA	NA
CHROMIUM	NA	NA	NA	NA	NA	NA	NA	NA	NA	NA	NA	NA
COBALT	NA	NA	NA	NA	NA	NA	NA	NA	NA	NA	NA	NA
COPPER	NA	NA	NA	NA	NA	NA	NA	NA	NA	NA	NA	NA
IRON	NA	NA	NA	NA	NA	NA	NA	NA	NA	NA	NA	NA
LEAD	NA	NA	NA	NA	NA	NA	NA	NA	NA	NA	NA	NA
MAGNESIUM	NA	NA	NA	NA	NA	NA	NA	NA	NA	NA	NA	NA
MANGANESE	NA	NA	NA	NA	NA	NA	NA	NA	NA	NA	NA	NA
MERCURY	NA	NA	NA	NA	NA	NA	NA	NA	NA	NA	NA	NA
MOLYBDENUM	NA	NA	NA	NA	NA	NA	NA	NA	NA	NA	NA	NA
NICKEL	NA	NA	NA	NA	NA	NA	NA	NA	NA	NA	NA	NA
POTASSIUM	NA	NA	NA	NA	NA	NA	NA	NA	NA	NA	NA	NA
SELENIUM	NA	NA	NA	NA	NA	NA	NA	NA	NA	NA	NA	NA
SILVER	NA	NA	NA	NA	NA	NA	NA	NA	NA	NA	NA	NA
SODIUM	NA	NA	NA	NA	NA	NA	NA	NA	NA	NA	NA	NA
THALLIUM	NA	NA	NA	NA	NA	NA	NA	NA	NA	NA	NA	NA
VANADIUM	NA	NA	NA	NA	NA	NA	NA	NA	NA	NA	NA	NA
ZINC	NA	NA	NA	NA	NA	NA	NA	NA	NA	NA	NA	NA
DISSOLVED METALS (UG/L)												
ALUMINUM	NA	NA	NA	NA	NA	NA	NA	NA	NA	NA	NA	NA
ANTIMONY	NA	NA	NA	NA	NA	NA	NA	NA	NA	NA	NA	NA
ARSENIC	NA	NA	NA	NA	NA	NA	NA	NA	NA	NA	NA	NA
BARIUM	NA	NA	NA	NA	NA	NA	NA	NA	NA	NA	NA	NA
BERYLLIUM	NA	NA	NA	NA	NA	NA	NA	NA	NA	NA	NA	NA
CADMIUM	NA	NA	NA	NA	NA	NA	NA	NA	NA	NA	NA	NA
CALCIUM	NA	NA	NA	NA	NA	NA	NA	NA	NA	NA	NA	NA
CHROMIUM	NA	NA	NA	NA	NA	NA	NA	NA	NA	NA	NA	NA
COBALT	NA	NA	NA	NA	NA	NA	NA	NA	NA	NA	NA	NA
COPPER	NA	NA	NA	NA	NA	NA	NA	NA	NA	NA	NA	NA
IRON	NA	NA	NA	NA	NA	NA	NA	NA	NA	NA	NA	NA
LEAD	NA	NA	NA	NA	NA	NA	NA	NA	NA	NA	NA	NA

SHADED - DETECTED
U-NOT DETECTED; J-QUANTITATION APPROXIMATE; R-REJECTED; NA-NOT ANALYZED

SAMPLE ID	DA-MW124B-1020	DA-MW124B-3545	DA-MW-124B-081110	DA-MW125B-2636	DA-MW125B-3646	DA-MW126B-2227	DA-MW126B-4246	DA-MW126B-5055	DA-MW-127B-081010	DA-GW-MW128B-080910	DA-MW-129B-081010-AVG	DA-GW-MW130B-080910
LOCATION ID	DA-MW124B			DA-MW125B		DA-MW126B			DA-MW127B	DA-MW128B	DA-MW129B	DA-MW130B
SAMPLE DATE	08/01/08	08/04/08	08/11/10	07/31/08	08/01/08	07/30/08	07/30/08	07/30/08	08/10/10	08/09/10	08/10/10	08/09/10
SCREEN TOP DEPTH	8.0	8.0	8.0	10.0	10.0	20.0	20.0	20.0	36.0	35.0	8.0	10.5
SCREEN BOTTOM DEPTH	48.8	48.8	48.8	50.5	50.5	60.0	60.0	60.0	46.0	45.0	58.0	60.5
WELL DEPTH	48.75	48.75	48.75	50.5	50.5	60	60	60	46	45	58	60.5
SACODE	NORMAL	NORMAL	NORMAL	NORMAL	NORMAL	NORMAL	NORMAL	NORMAL	NORMAL	NORMAL	AVG	NORMAL
QC TYPE	NM	NM	NM	NM	NM	NM	NM	NM	NM	NM	NM	NM
MAGNESIUM	NA	NA	NA	NA	NA	NA	NA	NA	NA	NA	NA	NA
MANGANESE	NA	NA	NA	NA	NA	NA	NA	NA	NA	NA	NA	NA
MERCURY	NA	NA	NA	NA	NA	NA	NA	NA	NA	NA	NA	NA
MOLYBDENUM	NA	NA	NA	NA	NA	NA	NA	NA	NA	NA	NA	NA
NICKEL	NA	NA	NA	NA	NA	NA	NA	NA	NA	NA	NA	NA
POTASSIUM	NA	NA	NA	NA	NA	NA	NA	NA	NA	NA	NA	NA
SELENIUM	NA	NA	NA	NA	NA	NA	NA	NA	NA	NA	NA	NA
SILVER	NA	NA	NA	NA	NA	NA	NA	NA	NA	NA	NA	NA
SODIUM	NA	NA	NA	NA	NA	NA	NA	NA	NA	NA	NA	NA
THALLIUM	NA	NA	NA	NA	NA	NA	NA	NA	NA	NA	NA	NA
VANADIUM	NA	NA	NA	NA	NA	NA	NA	NA	NA	NA	NA	NA
ZINC	NA	NA	NA	NA	NA	NA	NA	NA	NA	NA	NA	NA
MISCELLANEOUS PARAMETERS (MG/L)												
AMMONIA-N	NA	NA	NA	NA	NA	NA	NA	NA	0.05 U	0.05 U	0.17	NA
CHLORIDE	NA	NA	NA	NA	NA	NA	NA	NA	NA	NA	NA	NA
NITRATE-N	NA	NA	NA	NA	NA	NA	NA	NA	0.02 J	0.02 J	0.325	NA
NITRITE-N	NA	NA	NA	NA	NA	NA	NA	NA	0.025 U	0.025 U	0.025 U	NA
ORTHOPHOSPHATE-P	NA	NA	NA	NA	NA	NA	NA	NA	0.05 U	0.05 U	0.05 U	NA
SULFATE	NA	NA	NA	NA	NA	NA	NA	NA	39	25	11	NA
SULFIDE	NA	NA	NA	NA	NA	NA	NA	NA	0.8 U	0.8 U	0.8 U	NA
TOTAL ORGANIC CARBON	NA	NA	NA	NA	NA	NA	NA	NA	0.66 J	0.6 J	1.9	NA
MISCELLANEOUS PARAMETERS (UG/L)												
CYANIDE	NA	NA	NA	NA	NA	NA	NA	NA	NA	NA	NA	NA
METHANE	NA	NA	NA	NA	NA	NA	NA	NA	NA	NA	NA	NA
FIELD (UG/L)												
FERROUS IRON	NA	NA	NA	NA	NA	NA	NA	NA	NA	NA	NA	NA
PETROLEUM HYDROCARBONS (UG/L)												
EXTRACTABLE TPH (C09-C36)	1100 J	1300 J	NA	270	220	360	270	180	NA	NA	NA	NA
GASOLINE RANGE ORGANICS	25	61	NA	19	18	10 U	10 U	10 U	NA	NA	NA	NA

SHADED - DETECTED
U-NOT DETECTED; J-QUANTITATION APPROXIMATE; R-REJECTED; NA-NOT ANALYZED