N00102.AR.000073
NSY PORTSMOUTH
5090.3a

McLAREN / HART ENVIRONMENTAL ENGINEERING CORPORATION

QUALITY ASSURANCE / QUALITY CONTROL FIELD MANUAL FOR AIR QUALITY MONITORING STUDY

PORTSMOUTH NAVAL SHIPYARD

KITTERY, MAINE

SEPTEMBER 1991

TABLE OF CONTENTS

Section	Description	Page
I	INTRODUCTION	1
	1.0.0 Purpose	
	1.1.0 Project Description and Scope of Work	
	1.1.1 Volatile Organic Compounds (VOC's) Monitoring	
	1.1.2 Semi-Volatile Organic Compounds (SVOC's) Monitoring	
	1.1.3 PM_{10} Inhalable Particulates Monitoring	
	1.1.4 Total Suspended Particulates (TSP) and Heavy Metals Monitoring	
	1.1.5 Sorbent Tube Sampling for Amines and Volatile Mercury	
	1.1.6 Background Monitoring	
	1.2.0 Project Organization and Responsibility	
II	QUALITY ASSURANCE POLICY	
	2.0.0 Quality Assurance Objectives	
	2.1.0 Data Validity	
	2.2.0 Air Quality and Meteorological Monitoring Performance Criteria and Objectives	
	2.3.0 QA Document Control and Revisions	

TABLE OF CONTENTS
(continued)

Section	Description	Page
III	METEOROLOGICAL MONITORING	
	3.0.0 Meteorological Monitoring Program Design and Station Siting	
	3.0.1 Monitoring Parameters	
	3.0.2 Wind Rose Records	
	3.0.3 Sensor Descriptions	
	3.0.4 Instrument Sensor Calibrations	
	3.0.5 Sensor Exposure Height	
	3.1.0 Quality Assurance / Quality Control	
	3.1.1 Wind Speed and Wind Direction	
	3.1.2 Ambient Air and Soil Temperature	
	3.1.3 Precipitation	
	3.1.4 Relative Humidity	
	3.1.5 Barometric Pressure	
	3.2.0 Data Processing	
	3.2.1 Wind Speed and Wind Direction	
	3.2.2 Ambient Air and Soil Temperature	
	3.2.3 Precipitation	
	3.2.4 Relative Humidity	
	3.2.5 Barometric Pressure	

TABLE OF CONTENTS
(continued)

Section	Description	Page
IV	CAMPBELL SCIENTIFIC, INC. MODEL 21XL DATALOGGER SYSTEM	
	4.0.0 Data Logger System Quality Assurance	
	4.0.1 Applicability	
	4.0.2 Performance Goals	
	4.1.0 System Description	
	4.1.1 Identification and Description of Controls	
	4.2.0 Program Preparation	
	4.2.1 Campbell PC208 Support Software	
	4.2.2 Practical Considerations	
	4.2.3 Program Download	
	4.2.4 Program Listing	
	4.3.0 Installation	
	4.3.1 Connecting Analog Inputs	
	4.4.0 System Operation	
	4.4.1 Operational Checks	
	4.4.2 Data Recovery and Retrieval of Data from Storage Modules	
	4.5.0 Maintenance	
	4.6.0 Calibration	

TABLE OF CONTENTS
(continued)

Section	Description	Page
V	TOTAL SUSPENDED PARTICULATES (TSP) HIGH VOLUME AIR SAMPLER	
	5.0.0 High Volume Air Sampler Quality Assurance	
	5.1.0 System Description	
	5.1.1 Operation	
	5.1.2 Installation of Filter	
	5.1.3 Operational Checks	
	5.1.4 Sample Handling	
	5.1.5 Preventive Maintenance Program	
	5.2.0 Audits and Precision	
	5.2.1 Hi-Vol Flow Audits	
	5.2.2 Precision (Co-Located Samplers)	
	5.3.0 Primary Calibration Procedures	
	5.3.1 High Volume Calibration Protocol	
	5.3.2 Hi-Vol Flow Audit Device Certification	
	5.4.0 Processing TSP and Heavy Metals Data	

TABLE OF CONTENTS
(continued)

Section	Description	Page
VI	PM_{10} INHALABLE PARTICULATES	
	6.0.0 PM_{10} Air Sampler Quality Assurance	
	6.1.0 System Description	
	6.1.1 Operation	
	6.1.2 Installation of Filter	
	6.1.3 Operational Checks	
	6.1.4 Sampler Handling	
	6.1.5 Preventive Maintenance	
	6.2.0 Audits and Precision	
	6.2.1 PM_{10} Flow Audits	
	6.2.2 Precision (Co-Located)	
	6.3.0 Primary Calibration Procedures	
	6.3.1 PM_{10} Sampler Calibration Protocol	
	6.3.2 PM_{10} Flow Audit Device Certification	
	6.4.0 Processing PM_{10} Data	

TABLE OF CONTENTS
(continued)

Section	Description	Page
VII	VOLATILE ORGANIC COMPOUNDS (VOC's)	
	7.0.0 VOC Sampler Quality Assurance	
	7.1.0 System Description	
	7.1.1 Operation	
	7.1.2 Installation of Canister	
	7.1.3 Operational Checks	
	7.1.4 Sample Handling	
	7.2.0 Audits and Precision	
	7.2.1 VOC Sampler Flow Audits	
	7.2.2 Precision (Co-Located Samplers)	
	7.3.0 Primary Calibration Procedures	
	7.4.0 Processing VOC Data	

TABLE OF CONTENTS
(continued)

Section	Description	Page
VIII	SEMI-VOLATILE ORGANIC COMPOUNDS (SVOC's)	
	8.0.0 SVOC (PUF) Sampler Quality Assurance	
	8.1.0 System Description	
	8.1.1 Operation	
	8.1.2 Installation of Particulate Filter and PUF/XAD-2 Cartridge	
	8.1.3 Operational Checks	
	8.1.4 Sample Handling	
	8.1.5 Preventive Maintenance Program	
	8.2.0 Audits and Precision	
	8.2.1 SVOC Sampler Flow Audits	
	8.2.2 Precision (Co-Located Samplers)	
	8.3.0 Primary Calibration Procedures	
	8.3.1 SVOC Sampler Calibration Protocol	
	8.3.2 SVOC Sampler Flow Audit Device Certification	
	8.4.0 Processing SVOC Data	

TABLE OF CONTENTS
(continued)

Section	Description		Page
IX	QUALITY CONTROL (QC) MANAGEMENT		
	9.0.0	Purpose	
	9.1.0	Chain-of-Custody Procedures	
	9.2.0	Analytical QC Procedures	
	9.3.0	Documentation	
X	DATA MANAGEMENT		
	10.0.0	Purpose	
	10.1.0	Data Processing/Validation Procedures	
	10.2.0	Data Reporting Procedures	
	10.3.0	Documentation	

APPENDICES

APPENDIX A -- WORKING FORMS

APPENDIX B -- FIGURES & TABLES

APPENDIX C -- SUPPLEMENTAL DOCUMENTS
McLAREN/HART HEALTH AND SAFETY PLAN (HASP-II)

INTRODUCTION

I. INTRODUCTION

Section		Revision	Date
1.0.0	Purpose	0	08/20/91
1.1.0	Project Description and Scope of Work	0	08/20/91
1.1.1	Volatile Organic Compounds (VOC's) Monitoring	0	08/20/91
1.1.2	Semi-Volatile Organic Compounds (SVOC's) Monitoring	0	08/20/91
1.1.3	PM_{10} Inhalable Particulates Monitoring	0	08/20/91
1.1.4	Total Suspended Particulates (TSP) and Heavy Metals Monitoring	0	08/20/91
1.1.5	Sorbent Tube Sampling for Amines and Volatile Mercury	0	08/20/91
1.1.6	Background Monitoring	0	08/20/91
1.2.0	Project Organization and Responsibility	0	08/20/91

1.0.0 Purpose

The purpose of this document is to provide the field operator and data user with a set of guidelines, procedures, and specific goals for ensuring the highest level of data quality which can be obtained from this monitoring effort. This ambient air monitoring study has been initiated by McLaren/Hart Environmental Engineering Corporation (McLaren/Hart) in conjunction with the soils and groundwater monitoring portions of Phase IV of the RCRA Facility Investigation Study at the Portsmouth Naval Shipyard (PNS) in Kittery, Maine.

Since monitoring for ambient air toxic substances is particularly demanding due to the complexity of the sampling and analytical methods used, it is important that all aspects of such a study be fully documented with the following elements properly addressed and documented:

1. A detailed description of the study including locations of each sampling station; targeted compounds; and sampling schedule(s).

2. Descriptions of the sampling and analytical methodologies to be used in the study.

3. Policy and Objectives - a statement of the commitment to an effective Q.A. effort and specific Q.A. goals that will be pursued (refer to Section 2.0).

4. All necessary and required Standard Operating Procedures (S.O.P.'s) for the air sampling and meteorological monitoring instrumentation used. These S.O.P.'s also include calibration and maintenance procedures.

5. Detailed aspects of the data collection system for the meteorological monitoring system (refer to Sections 3 and 4).

6. Audits - procedures for flow checking of all air sampling equipment and conducting system audits to determine overall integrity of the sampling network.

7. Sample Handling - method(s) of transporting samples from field to laboratory and procedures taken to ensure integrity of samples. This section includes chain-of-custody procedures to document correct handling of samples.

1.1.0 Project Description and Scope of Work

McLaren/Hart Environmental Engineering Corporation (McLAREN/HART) has proposed an intensive ambient air monitoring program to be initiated in conjunction with the soils and groundwater monitoring portions of Phase IV of the RCRA Facility Investigation Study at the Portsmouth Naval Shipyard (PNS) in Kittery, Maine.

This AQ Monitoring Study will include both ambient air sampling and meteorological monitoring. A total of nine (9) sites have been proposed. This total includes the following breakdown by area:

- JILF--5 sites (Site Nºs 3-7)
  DRMO--2 sites (Site Nº 1-2)
  Background--2 sites (Site Nºs 8-9)

  Meteorological monitoring will be conducted at one site (Site Nº 5).

  Ambient air sampling will consist of the following parameters:

  Volatile Organic Compounds (VOCs)--6 sites
  Semi-Volatile Organics (pesticides, PCB's, and PAH's)--8 sites
  PM-10 and TSP--8 sites
  Heavy Metals--8 sites
  Amines, Volatile Mercury, and Phthalates compounds--8 sites

Siting of these ambient air quality monitoring stations are based on USEPA's recommended criteria for such monitoring stations. Specifically, each AQ sampler is located on a platform which elevates the inlet of the sampler to approximately 2.1 meters above the ground; a horizontal separation of greater than 2 meters is also maintained for the samplers from each other in order to eliminate re-circulation effects and re-entrainment of a sampler's exhaust by another sampler. Refer to Table III in Appendix B for a summary of the USEPA siting criteria.

Refer to Figure 1 (Appendix B), the AQ site location map, for the locations of these sampling sites. Table I (Appendix B) which follows also provides specific details of the locations of these monitoring sites and the types of compounds monitored.

The intent of this ambient air monitoring investigation is to provide data to support the Human Health Risk Assessment. Preliminary ambient air screening monitoring conducted in 1990 by McLaren/Hart and others was reviewed in conjunction with existing meteorological data for the area prior to developing this ambient air monitoring program.

The AQ parameters selected for this study are based upon the preliminary screening conducted at the site as well as guidance information found in the USEPA's Risk Assessment Guidance for Superfund - Volume 1. Human Health Evaluation (Part A) Interim Final (Dec. 1989, EPA 540/1-89/002) and The Air/Superfund National Technical Guidance Study Series EPA 450/1-89-001 to 004, Volume 4, Procedures for Dispersion Modeling and Air Monitoring for Superfund Air Pathway Analysis.

In addition to the data acquired during this study, New Hampshire Department of Environmental Services' Air Resources Division ambient AQ monitoring data for 1989 and 1990 for the Merrimack Valley-Southern New Hampshire Air Quality Control Region may also be used. According to regulatory personnel, an air monitoring station is located approximately two (2) miles west of the PNS. Air monitoring data from the Maine Department of Environmental Protection's Bureau of Air Quality Control for the Metropolitan Portland Air Quality Region which includes Kittery will also be reviewed and used, if applicable, to support the Human Health Risk Assessment.

As mentioned above, this study will include on-site meteorological monitoring during the AQ sampling period so that dispersion modelling may be performed later, if needed, for risk assessment purposes. Representative meteorological conditions and actual air pollutant concentrations found at the PNS, though, would yield much more meaningful modeling information.

The AQ monitoring study will be an intensive three (3) week sampling project with the target parameters monitored on an every-other-day basis (see Figure 2 in the Appendix). All specified AQ samplers will be operated concurrently. Each sample will be taken over a 24-hour period with the sampling period starting at midnight and ending 24 hours later at midnight. An additional fourth week of sampling may be necessary if unanticipated problems and/or delays occur which affect the required number of valid samples taken (eleven samples per site per AQ parameter).

1.1.1 Volatile Organic Compounds (VOCs)

Five (5) locations have been selected for sampling of volatile organic compounds (VOCs) around the Jamaica Island Landfill (JILF) Solid Waste Management Unit (SWMU Nº 8) as part of the Public Health and Environmental Risk Evaluation (PHERE) at the Portsmouth Naval Shipyard (PNS). VOC's will also be measured at two (2) background stations. The VOCs will include both aromatics and halogenated compounds (TCE, PCE, vinyl chloride, benzene, and methylene chloride). The VOCs will include both aromatics and halogenated compounds (TCE, PCE, vinyl chloride, benzene, and methylene chloride (refer to Figure 2 in Appendix B for specifics). The VOC sampling will be conducted using lab-certified Summa-passivated evacuated canisters and samplers. Each sampler will have flow control and a digital timer to automatically control on and off operations. Each canister will be analyzed for the specified VOCs according to the USEPA TO14 method.

Because it is anticipated that the laboratory cannot turn around the canisters within three (3) weeks, a sufficient supply of certified canisters (at least 92) must be on hand for the study.

A duplicate VOC sampler will also be operated during each scheduled sampling run. This duplicate sampler will be rotated from site to site during each sampling period. This duplicate sample will be used for quality control (QC) purposes. An additional QC check will be made using a trip blank canister which will be analyzed along with the others for each sampling period. The trip blank will not be exposed; however, it will be subjected to the same laboratory and field handling procedures.

1.1.2 Semi-Volatile Organic Compounds (SVOCs) Monitoring

Semi-volatile organic compounds (SVOCs) will be sampled at a total of seven (7) sites. Two (2) sites will be located at the DRMO (SWMU Nº 6); five (5) sites will be at the JILF (SWMU Nº 8). SVOC's will also be measured at two (2) background stations. As with the VOC sampling, a duplicate SVOC sampler will also be operated in parallel with one of the other SVOC samplers on a rotational basis during each scheduled sampling run. The duplicate will be accompanied by a blank for QA/QC purposes. The SVOCs to be sampled and analyzed for include DDD, DDE, DDT, PCBs. Also certain PAHs, amines, and phthalates (refer to Figure 2 in the Appendix) will also be included.

The SVOC sampling will be accomplished by the use of polyurethane foam (PUF) samplers which are designed to collect pesticides, PCBs, PAHs, and the other mentioned compounds. McLaren/Hart will use a PUF sampler from General Metal Works (GMW) which is based on the USEPA's recommended design. This sampler is a modified high-volume air sampler which contains a cartridge down stream of the circular particulate filter. The cartridge holds two (2) cylindrical PUF "plugs" which are the collection media for the SVOCs. The PUF sampler employs a flow venture, a magnehelic gauge, and a timer which automatically control the on-off operation cycles and record total elapsed sampling time.

The PUF samplers will operate at an initial flow rate of approximately 10 CFM. Each PUF sample is analyzed by the laboratory by first undergoing a liquid extraction technique. Gas chromatography (GC) is then used to analyze the SVOCs in question.

As with the VOC sampling, SVOC sampling will be scheduled during the same 24-hour periods.

1.1.3 PM-10 Inhalable Particulates

PM-10 inhalable particulate sampling will also be conducted at the same seven (7) sites. Frequency of sampling will be identical to the other pollutant sampling. Each PM-10 sampler will employ a mass flow controller and a digital timer to control the on-off cycles. The flow rate will be controlled to 40 SCFM. Each PM-10 filter will be analyzed for PM-10 inhalable particulates concentrations.

PM-10 levels will also be measured at two (2) background stations. It is anticipated that at least 110 PM-10 filter samples will be collected and analyzed for this study.

As with the other pollutant sampling described, a duplicate PM-10 sampler will be operated during each scheduled sampling period. A blank PM-10 filter will also be used for QA/QC purposes.

1.1.4 Total Suspended Particulates (TSP) and Heavy Metals Monitoring

Total suspended particulate (TSP) samplers will also be employed in this study in order to collect TSP and heavy metals samples.

TSP sampling will be conducted at the same seven (7) sites and the sampling schedule will be identical to the other pollutant sampling efforts. TSP levels will also be measured at the two (2) background stations. A duplicate TSP sampler will be operated in parallel with one of the other TSP samplers during each scheduled sampling period and a blank TSP filter will also be utilized for QA/QC purposes. A standard TSP hi-volume air sampler will be used with a glass fiber filter medium for collecting the TSP (< 100 micron) particulate matter. The TSP samplers will utilize mass flow controllers and timers to automatically control the on and off operations cycles. The flow rates will be controlled to 50 SCFM.

Each TSP sample will be gravimetrically weighed before and after sampling to determine the TSP concentrations. Each sample will also be analyzed for certain heavy metals. These metals include the following:

1) Arsenic
2) Barium
3) Cadmium
4) Total Chromium*
5) Lead
6) Nickel
7) Antimony
8) Beryllium
9) Mercury (non-volatile)

* *It will be assumed that total chromium will be hexavalent chromium. If initial samples show high total chromium concentrations, hexavalent chromium will then also be analyzed.*

TSP filters are recommended for the heavy metals determinations in lieu of PM-10 filters because all heavy metals data to date have been based on TSP filters and there have been no correlations obtained between PM-10 and TSP heavy metals determinations. If, however, heavy metals concentrations from PM-10 samples are required, the PM-10 filter samples can be analyzed for an additional cost. The laboratory will be instructed to save all PM-10 filter samples in the event that such data are needed.

Non-volatile mercury will be analyzed from the TSP filter samples; however, volatile mercury will be analyzed by sorbent tube.

1.1.5 Sorbent Tube Sampling for Amines & Volatile Mercury

Mercury sampling will be conducted at the same seven (7) sites using a sorbent tube sampling train. The amines sampling methodology is based on USEPA's TO-7 method, but will be modified with larger sorbent tubes to accommodate higher flow rates and a longer sampling time (24 hours); the volatile mercury will also use a sorbent tube based on a NIOSH method.

As with the other pollutant sampling techniques described, the amines and volatile mercury sampling methods will include duplicate sampling tubes and blank tubes for each 24-hour sampling run conducted.

1.1.6 Background Monitoring

For this study, two (2) background monitoring sites have been selected (Site Nºs 8&9) based on the prevailing wind direction data in the vicinity of the Portsmouth Naval Shipyard. Based on the available meteorological data from both the Naval Base and the regulatory agencies, these data indicate that the predominant wind direction during the study period (October) is from the west-northwest. Consequently, a primary background monitoring station is located in this quadrant upwind of the targeted hazardous waste areas of the base. This station will measure incoming levels of ambient contaminants from Kittery, Maine and other outside sources in this wind direction quadrant.

A second background station is located further west and east of the CIA area. This second station will pick up any incoming air pollution from the CIA area as well as the City of Portsmouth, New Hampshire (refer to Figure 1 in Appendix B for a map of these stations).

The two (2) background stations were considered necessary in order to ascertain the overall impacts of the CIA area of the naval shipyard as well as Portsmouth and Kittery on the ambient air levels found at Site Nºs 1-7.

Both background stations will measure the same AQ parameters as the other sites.

1.2.0 Project Organization and Responsibility

The overall project management for this study will be the responsibility of the Albany, New York office of McLaren/Hart Environmental Engineering Corporation. The project management team will consist of two senior managers, Mr. Stephen F. Urschel, Program Manager for the overall RCRA Facility Investigation project at the Portsmouth Naval Shipyard, and Mr. Willard J. Smith, P.E., the technical task manager for this ambient air monitoring study. Mr. Urschel's main responsibility is for the overall management of the RCRA Facility Investigation (RFI) contract which includes the ambient air monitoring study as a sub-task. Mr. Urschel, as the official representative of McLaren/Hart for this contract, is the primary liaison contact with the Navy's Northern Division. Mr. Smith, a registered professional engineer is responsible for the technical direction and supervision of all phases of this study including all subcontractor activities. Mr. Smith leads a staff of engineers, scientists, and other professionals involved in the various aspects of this study. Specifically, the following areas are included:

1) *Field Sampling* (AQ and meteorological monitoring)
2) *Quality Assurance/Quality Control* (QA/QC)
3) *Analytical Services* (sample handling, sample analysis, and analytical data processing)
4) *Data Validation*
5) *Final Data Reporting*

Figure 3 in Appendix B details the organizational structure of McLaren/Hart's management and technical team for this study.

QUALITY ASSURANCE POLICY

II. QUALITY ASSURANCE POLICY

Section		Revision	Date
2.0.0	Quality Assurance Objectives	0	08/20/91
2.1.0	Data Validity	0	08/20/91
2.2.0	Air Quality and Meteorological Monitoring Performance Criteria and Objectives	0	08/20/91
2.3.0	QA Document Control and Revisions	0	08/20/91

2.0.0 Quality Assurance (QA) Objectives:

- To assure the measurement and reporting of valid air quality data for the study.
- To document the accuracy and precision of the data through the use of data quality assessment statistical techniques, and parallel ambient air measurements using reference, equivalent and independent measurement methods.
- To establish and sustain uniform operation; calibration and data reporting procedures; including a quality control (QC) program.
- To assure complete data which contain at least the required number of valid samples to be taken for this study.
- To provide for prompt detection and correction of conditions which contribute to poor or invalid data quality.
- To ensure comparability of data through the use of USEPA reference or equivalent methods.
- To control the errors so that the data meet the precision and accuracy specified for each parameter with a 95 percent confidence limit.

2.1.0 Data Validity:

Data validity and acceptability is based on specific standards for each parameter. Data which exceed these data quality standards may be accepted, if required, by defining and reporting the precision and accuracy (measurement tolerances) limits for the data. These data can then be interpreted properly and reported with the understanding of the data's limitations of accuracy and/or precision.

2.2.0 Air Quality and Meteorological Monitoring Performance Criteria and Objectives:

A. Data Objective--

1. A goal of at least 90% average valid data for meteorological parameters during the study period. Averages are computed based on a planned study schedule of at least 21 calendar days with 15-minute, 1-hour and 24-hour averages generated.

   The data availability figure is the percent of valid data hours reported based on total hours in the period.

2. A goal of at least eleven (11) valid 24-hour AQ samples per parameter for the entire study period.

B. Instrumentation Objectives--

1. Maintain, calibrate and operate instruments in USEPA reference or equivalent status and/or as per the operator's manual.
2. Document operational status of instrumentation and report in final QA/data report.
3. Instrumentation inspection- certification report of status, and condition of a randomly chosen portion of the network during the study period.

C. Quality Assurance Objectives

1. All stations operated must conform with the submitted Quality Assurance manual.

2. Document the QA program status and take real time action on out of control limit conditions as per the QA/QC manual.

3. Participate in the USEPA air toxics audit program.

4. Submit final QA Summary Report with the final data. The final reports of accuracy, precision, and percent monitoring data availability are reported in the QA Summary Report. Graphs in the QA Report will summarize progress towards meeting precision, accuracy, and percent monitoring data availability objectives.

D. Laboratory Objective

1. Perform manual air monitoring analyses and in accordance with the submitted QA manual and/or Federal Register methods. Document all methods and procedures used for the study.

2. Submit laboratory QA report to McLaren/Hart for inclusion in final Data Report to NAVFAC Northern Division and the USEPA, Region I.

2.3.0 QA Document Control and Revisions:

This manual has been compiled in order that the QA objectives of this study can be documented and distributed to all users and operators involved in this study. This manual includes all standard operating procedures (S.O.P.'s) for the instrumentation used in the study as well as proper data validation procedures.

In order to maintain a high level of control over the quality of data generated, this manual will be constantly reviewed, updated where and when necessary, and revised in order to maintain this quality control. Any change to this document will first be approved by the client and/or its designated representatives before the change is finalized. As revisions are made, the following indexing format will be used:

Section Nº
Revision Nº
Date
Page

The "section" identifies the major section and subsection. The "revision" identifies the current revision, the "date" refers to the date of the current revision. The "page" includes the specific page and the total number of pages of that subsection. By using this indexing format, revisions can easily be made at any time by revising only the particular subsection in question.

METEOROLOGICAL MONITORING

III. METEOROLOGICAL MONITORING

Section		Revision	Date
3.0.0	Meteorological Monitoring Program Design and Station Siting	0	09/01/91
	3.0.1 Monitoring Parameters	0	09/01/91
	3.0.2 Wind Rose Records	0	09/01/91
	3.0.3 Sensor Descriptions	0	09/01/91
	3.0.4 Instrument Sensor Calibrations	0	09/01/91
	3.0.5 Sensor Exposure Height	0	09/01/91
3.1.0	Quality Assurance / Quality Control	0	09/01/91
	3.1.1 Wind Speed and Wind Direction	0	09/01/91
	3.1.2 Ambient Air and Soil Temperature	0	09/01/91
	3.1.3 Precipitation	0	09/01/91
	3.1.4 Relative Humidity	0	09/01/91
	3.1.5 Barometric Pressure	0	09/01/91
3.2.0	Data Processing	0	09/01/91
	3.2.1 Wind Speed and Wind Direction	0	09/01/91
	3.2.2 Ambient Air and Soil Temperature	0	09/01/91
	3.2.3 Precipitation	0	09/01/91
	3.2.4 Relative Humidity	0	09/01/91
	3.2.5 Barometric Pressure	0	09/01/91

3.0.0 Meteorological Monitoring Program Design and Station Siting

The meteorological monitoring station location was selected at a point where the following conditions were met:

a) open, unobstructed area

b) in close proximity to the areas to be monitored

c) power accessibility and security

The location chosen is at Site Nº 5 located in the northeastern sector of the JILF area (SWMU Nº 8). This location meets all conditions and satisfies the requirements of the study with respect to the USEPA's guidelines found in the publication entitled *Air/Superfund National Technical Guidance Study Series -- Volume 4, Procedures for Dispersion Modeling and Air Monitoring for Superfund Air Pathway Analysis.*

3.0.1 Monitoring Parameters

Primary meteorological parameters measured at the station are:

- wind direction
- wind speed
- Sigma theta (horizontal wind direction standard deviation, calculated by the CSI 21XL Data Logger)

These parameters will be used to characterize site dispersion conditions.

Secondary parameters include:

- air and soil temperature
- precipitation
- relative humidity
- barometric pressure

In addition to defining site conditions, the secondary parameters help define emission conditions.

3.0.2 Wind Rose Records

As a prerequisite to placing the two background AQ monitoring stations at the Naval Base, meteorological monitoring data had to be acquired to ascertain the predominant wind direction of the area so these background stations could be located in areas generally upwind of the other study sites.

Some historical meteorological data from March, 1978 were obtained from the Naval Shipyard in the form of seasonal and annual wind rose diagrams showing percentage frequency of wind direction. These diagrams show the prevailing wind direction for the Fall season to be from the northwest. Figure 5 of Appendix B contains these roses.

Additional meteorological monitoring data have been collected on-site during the months of September and early October of this year by McLaren/Hart in order to establish a predominant wind direction with very recent data. Figure 6 of Appendix B shows the composite wind rose for these data for a monitoring period covering 526 hours. This wind rose also shows that the prevailing wind direction is from the west to northwest.

3.0.3 Sensor Descriptions

The wind speed and wind direction sensors are manufactured by the RM Young Company. The wind speed sensor is a helicoid-shaped four-bladed propeller. The rotation of this propeller produces an AC sine wave whose frequency is directly proportional to the wind speed. The AC signal is induced in a transducer coil by a six-pole magnet mounted on the shaft of the propeller. This coil is located on the non-rotating section of the main mounting assembly, eliminating the need for such items as slip rings and brushes. The avoidance of these items improves the reliability of the sensor.

The wind direction sensor is based on the output of a potentiometer. With the precision excitation voltage from the CSI21XL datalogger applied to the potentiometer, the output signal becomes an analog voltage signal which is directly proportional to the azimuth angle (degrees from true north). This sensor has been aligned toward magnetic north (M.N.) which is 16.5° west of true north (T.N.) at Kittery, Maine. This difference is called the magnetic variation and must be accounted for when reporting wind direction readings with respect to true north.

The CSI Model 21XL datalogger has been programmed to subtract the value of 16.5° from all wind direction readings in order to compensate for the fact that the meteorological tower is not aligned to true north. Thus, a magnetic wind direction reading of, say 30° would actually become a true reading of 13.5°.

The two sensors are designed as one unit, the Model 05305-5 Wind Monitor-AQ. The Wind Monitor is constructed of thermoplastic materials which offer improved resistance to corrosion from sea air environments such as found at the Portsmouth Naval Shipyard. This unit is a high performance wind speed and direction sensing system designed specifically for air quality measurements. The unit features a low starting threshold, fast response, and high accuracy. It meets or exceeds the requirements published by the USEPA and US Nuclear Regulatory Agency. This unit interfaces directly to the CSI Model 21XL datalogger.

Other sensors include a combination relative humidity and ambient air temperature probe manufactured by Vaisala. A barometric pressure sensor is also manufactured by Vaisala.

3.0.4 Instrument/Sensor Calibration

All monitoring sensors were calibrated and tested by the respective manufacturers immediately prior to field installation. No sensor calibrations will be conducted during the study period due to its short duration, unless, however, data QA/QC procedures warrant otherwise.

All sensors will be tested under controlled conditions by McLaren/Hart prior to field installation.

3.0.5 Sensor Exposure Height

Primary parameters are measured at 10 meters above the surface. Air temperature and relative humidity are measured at 2 meters above the surface. Soil temperature is measured 3 to 6 inches below the ground surface. Barometric pressure is measured at a height of 1 meter above the ground. The pressure sensor is installed inside the CSI 21XL Data Logger housing.

3.1.0 Quality Assurance / Quality Control

Quality Assurance/Quality Control (QA/QC) for the meteorological monitoring portion of this study will include both automated checks during the data processing phase as well as manual review checks. Each meteorological parameter will be subjected to its own unique criteria which will flag potentially invalid data for further review, revision, or deletion.

The specific QA/QC criteria for these parameters can be found in the following sub-sections.

3.1.1 Quality Assurance/Quality Control

The criteria for flagging potentially invalid wind speed and wind direction data are as follows:

-- windspeed < 0 or > 25 m/s

-- windspeed does not vary more than 0.1 m/s for 3 consecutive hours

-- windspeed does not vary by more than .5 m/s for 12 consecutive hours

-- wind direction < 0 degrees or > 360 degrees

-- wind direction does not vary more than 1 degree for more than 3 consecutive hours

-- wind direction does not vary more than 10 degrees for 18 consecutive hours.

3.1.2 Quality Assurance/Quality Control

The criteria for flagging potentially invalid ambient air and soil temperature data are as follows:

-- temperature does not vary by more than .5 degrees during any 12-hour period.

3.1.3 Quality Assurance/Quality Control

The criteria for flagging potentially invalid precipitation data are as follows:

-- precipitation is greater than 25 mm in one hour

-- precipitation is greater than 100 mm in 24 hours

3.1.4 Quality Assurance/Quality Control

The criteria for flagging potentially invalid relative humidity data are as follows:

-- relative humidity is greater than 100 %

3.1.5 Quality Assurance/Quality Control

The criteria for flagging potentially invalid barometric pressure data are as follows:

-- barometric pressure reading is greater than 1,060 mb (sea level)

-- barometric pressure reading is less than 940 mb (sea level)

3.2.0 Data Processing

The following sub-sections briefly describe the method used by the Campbell Scientific, Inc. Model 21XL datalogging system in collecting and processing each meteorological monitoring parameter.

3.2.1 Wind Speed and Wind Direction

The CSI 21XL Data Logger converts voltages generated by the windspeed indicator to observed windspeed measurements with PROM #3. The windspeed indicator output voltage is scanned or sampled once every 2 seconds, as dictated by the user entered data logger execution interval. Each sampled voltage is multiplied by, a constant, .2192 to arrive at an observed miles per hour (mph) wind speed sample. Each converted sample is tested against the .9 mph instrument threshold with PROM #89, if the sample is less than .9 the sample result is recorded, with PROM #30, as 0 mph.

All windspeed sample results are accumulated for 15 minute, 1 hour and 24 hour arithmetic averaging using PROM #69.

The CSI 21XL Data Logger converts voltages generated by the wind direction indicator to observed wind direction measurements with PROM #4. The wind direction indicator output voltage is scanned or sampled once every 2 seconds, as dictated by the user entered data logger execution interval. Each sampled voltage is multiplied by a constant, .071, in order to convert to degrees. The wind direction results which are based on magnetic north (M.N.) rather than true north (T.N.) are then offset by -16.5 degrees to compensate for the magnetic variation at Kittery, Maine. This value is the angle between magnetic north and true north. At Kittery, Maine, the M.N. is 16.5° west of T.N.

Wind direction sample results are valid only when a wind speed of greater than 0 mph exists for the sample interval. The valid wind direction results are accumulated for 15 minute, 1 hour and 24 hour vector averaging (modula divide) using PROM #69.

Sigma theta (standard deviation of the horizontal wind direction values) is calculated by the CSI 21XL Data Logger using PROM #69. Calculation option '0' selects the Yamartino algorithm method of calculation as recommended and specified by the USEPA in its June, 1987 document entitled, *On-Site Meteorological Program Guidance for Regulatory Modeling Applications*. All valid samples are accumulated for 15 minute, 1 hour and 24 hour averaging.

3.2.2 Ambient Air and Soil Temperature

The CSI 21XL Data Logger converts voltages generated by the temperature probes to observed temperature measurements with PROM #11. The output voltages are scanned or sampled once every 2 seconds, as dictated by the user entered data logger execution interval. Each sampled voltage is recorded as an observed degrees Centigrade temperature sample. All temperature sample results are accumulated for 15 minute, 1 hour and 24 hour arithmetic averaging using PROM #71.

3.2.3 Precipitation

The CSI 21XL Data Logger converts voltages generated by each tip of the tipping bucket to observed precipitation measurements with PROM #3. The output voltage is scanned or sampled once every 2 seconds, as dictated by the user entered data logger execution interval. Each sampled voltage is multiplied by a constant, .254, to convert the voltage to inches of precipitation. All precipitation sample results are accumulated for 15 minute, 1 hour and 24 hour arithmetic averaging using PROM #71.

3.2.4 Relative Humidity

The CSI 21XL Data Logger converts voltages generated by the relative humidity sensor to observed percent relative humidity with PROM #4. The output voltage is scanned or sampled once every 2 seconds, as dictated by the user entered data logger execution interval. Each sampled voltage is multiplied by a constant, .1, to convert the voltage to percent relative humidity. All sample results are accumulated for 15 minute, 1 hour and 24 hour arithmetic averaging using PROM #71.

3.2.5 Barometric Pressure

The CSI 21XL Data Logger converts voltages generated by the barometric pressure sensor to observed mb with PROM #4. The output voltage is scanned or sampled once every 15 minutes to avoid program table over run, as specified by PROM #92. Each sampled voltage is multiplied by a constant, .1, to convert the voltage to actual mb pressure. All sample results are accumulated for 15 minute (one sample), 1 hour and 24 hour arithmetic averaging using PROM #71.

CAMPBELL SCIENTIFIC, INC.

(CSI)

MODEL 21XL DATALOGGER SYSTEM

IV. CSI 21XL DATA LOGGER SYSTEM

Section		Revision	Date
4.0.0	Data Logger System Quality Assurance	0	08/20/91
4.0.1	Applicability	0	08/20/91
4.0.2	Performance Goals	0	08/20/91
4.1.0	System Description	0	08/20/91
4.1.1	Identification and Description of Controls	0	08/20/91
4.2.0	Program Preparation	0	08/20/91
4.2.1	Campbell PC208 Support Software	0	08/20/91
4.2.2	Practical Considerations	0	08/20/91
4.2.3	Program Download	0	08/20/91
4.2.4	Program Listing	0	08/20/91
4.3.0	Installation	0	08/20/91
4.3.1	Connecting Analog Inputs	0	08/20/91
4.4.0	System Operation	0	08/20/91
4.4.1	Operational Checks	0	08/20/91
4.4.2	Data Recovery and Retrieval of Data from Storage Modules	0	08/20/91
4.5.0	Maintenance	0	08/20/91
4.6.0	Calibration	0	08/20/91

4.0.0 Data Logger System Quality Assurance

The quality assurance program described in this section has been developed to provide digital data logging capability of the maximum attainable quality. However, the quality of the data can never exceed that of the measuring device. This quality assurance program must therefore be accomplished in parallel with the quality assurance programs for the individual instruments.

The program consists of three parts: calibration, standardized operation and performance audit.

Calibration: Primary calibration is required before field utilization and periodically thereafter to insure accuracy.

Operation: In addition to standardized procedures, the operational phase of the quality assurance program provides for frequent comparisons of the data logger to the measuring instrument. These checks will permit the rapid discovery of any abnormal performance.

Performance Audit: An audit of the performance of the data logger system is integrated into the periodic performance audits of the measuring device. The combination of measuring device and data logger is required to meet the same performance criteria normally applied to the measuring device. Another way to express this is to consider the data logger as an auxiliary output of the measuring device.

Numerical Assessment: Numerical assessment of the performance of the data logger is defined in terms of completeness. The other two measures typically applied, accuracy and precision, are not appropriate since they would be redundant in this case. The performance audit procedure which yields the accuracy of the measurement device includes the performance of the data logger.

4.0.1 Applicability

This QA Manual is applicable to data logger equipment operated by McLaren/Hart staff for the ambient air quality monitoring study at the Portsmouth Naval Shipyard (PNS) in Kittery, Maine.

The organization conducting the study is fully responsible for determining the appropriateness of these procedures for the particular circumstances involved, for conduct of the program, and for reporting the results.

4.0.2 Performance Goals

The specific goal of the data logger quality assurance program is to yield data which meet or exceed the following objectives:

Accuracy: As appropriate for the measuring device(s).

Precision: As appropriate for the measuring device(s).

Completeness: Data recovery for 90% of the reporting periods.

4.1.0 System Description

a) Campbell Scientific Model 21XL Data Logger

The CSI 21XL data logger is a compact, versatile solid state electronic system for data collection, manipulation, and storage. It can be programmed to acquire data from a wide variety of inputs including single-ended and differential voltages, thermocouples, resistance/conductivity bridges and pulses. Data processing includes maximum or minimum values, averages, scaling, wind vector calculations and Fourier transforms. Output options include printers, solid state storage modules and telecommunications.

This QA manual will address only routine operation of the data logging system. For a full appreciation of its capabilities, it will be necessary to study the manufacturer's instruction manual.

b) Campbell Scientific Storage Modules (Model SM192)

CSI storage modules are solid state, CMOS RAM battery backed up devices designed to store and unload data recorded by the Campbell Scientific data loggers. The model used for this study includes the following specifications:

MODEL	MEMORY (BYTES)	DATA POINT CAPACITY LOW RESOLUTION	HIGH RESOLUTION
SM192	192K	~96,000	~48,000

Low resolution (4 digits) points range from +/- 0.001 to +/- 6999. High resolution data points (5 digits) range from +/- 0.00001 to +/- 99999. Most data are collected in the low resolution mode since high resolution data require twice as much space.

The capacity of the storage module can be used to estimate the interval at which it must be retrieved and processed. Consider the collection of weather data which yields eleven (11) data points every 15 minutes (output identification, date, hour: minutes, average wind speed, vector wind speed, vector wind direction, horizontal sigma, barometric pressure, relative humidity, soil temperature, and ambient air temperature). Six (6) additional data points (maximum wind speed and time of occurrence, minimum air temperature and time of occurrence, and maximum air temperature and time of occurrence) are output hourly. Additionally, eleven (11) data points are stored each 24-hour period. The total data points per day is then 1211. The data are collected in the low resolution.

The capacity of the SM192 storage module would be:

$$\frac{96{,}000 \text{ points}}{1211 \text{ points/day}} = \sim 79 \text{ days } (\sim 2.5 \text{ months})$$

It would be prudent, however, to plan on retrieving the module at not more than seven (7) day intervals. This would allow five (5) days for contingencies and eliminate the potential problem of losing data due to unforseen problems. The storage module will be down loaded to a personal computer (PC) in the field, a copy of the down loaded raw data file and the storage module will be returned to the McLaren/Hart, Albany office. The storage module will be cleaned (erased), and then returned to the site.

The CSI data logger will be utilized to collect and store meteorological monitoring data from the R.M. Young met station (refer to Section 3 for details of the meteorological monitoring portion of the study). The data logger is programmed to:

1) collect all meteorological sensor signals (voltages),
2) format these voltages into 15-minute, 1-hour and 24-hour meteorological averages, and
3) transfer these average readings to the storage modules each quarter hour.

The CSI data logger is battery backed up and capable of storing meteorological data for 2 to 3 days if a storage module fails or is inadvertently disconnected. The data logger, however, must be manually reprogrammed to dump these data to the storage modules or other output devices. Battery-operated CMOS memory data storage modules from CSI are used with the data logger to collect and temporarily store meteorological data from the meteorological station located at site Nº 5 at PNS.

The data storage modules utilize a 5-year lithium battery and are sealed by the factory. Battery replacement, when necessary, must be done by CSI.

4.1.1 Identification and Description of Controls

a) CSI 21XL Data Logger

Figure 4.1 shows the 21XL data logger. The following devices are found on the top of the 21XL:

1) Analog Input Terminal Strip - Normally covered, this strip provides screw terminal connections for up to 16 analog inputs and associated grounds.

2) Lower Terminal Strip - This strip provides screw terminal connections for several specialized inputs and outputs including excitation voltage, constant analog output, digital control lines, pulse count inputs, and external power supply.

3) Display - A liquid crystal display for access to program and data stored in the data logger.

4) Hex Key Pad - A hexadecimal key pad for entry of commands into the data logger.

5) Serial I/O - A nine pin connector for digital communication with the 21XL data logger. This port is used for connection to data storage modules, printers and IBM compatible PC computers.

The following features are found on the side of the 21XL:

6) Power Switch - Turns data logger on/off. This switch must remain ON. All programs and data in the 21XL are lost if switched OFF.

7) Charger Plug - Input for battery charger.

8) LED - A red indicator lamp which lights when the battery charger is active.

Figure 4-1

21XL Datalogger

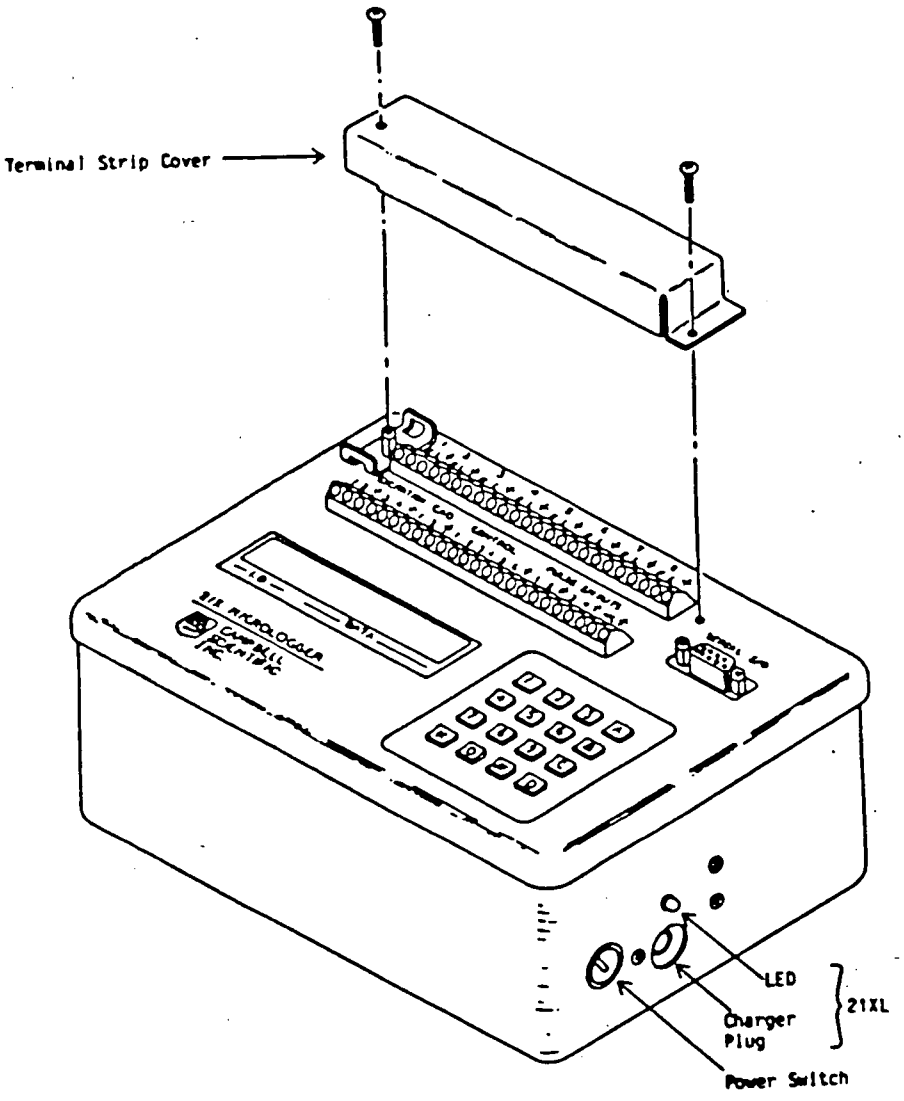

b) CSI Storage Module

Figure 4.2 shows the SM192 192K data storage module. The following features are found on this device:

1) Serial I/O - A nine pin connector for connection to the 21XL data logger for data acquisition or to an IBM compatible PC computer for data recovery.

Additionally, the SM192 has the following:

2) Battery - backed up 192K RAM data storage.

3) - 35° to 65°C operating range.

Figure 4.2

SM192 Storage Module

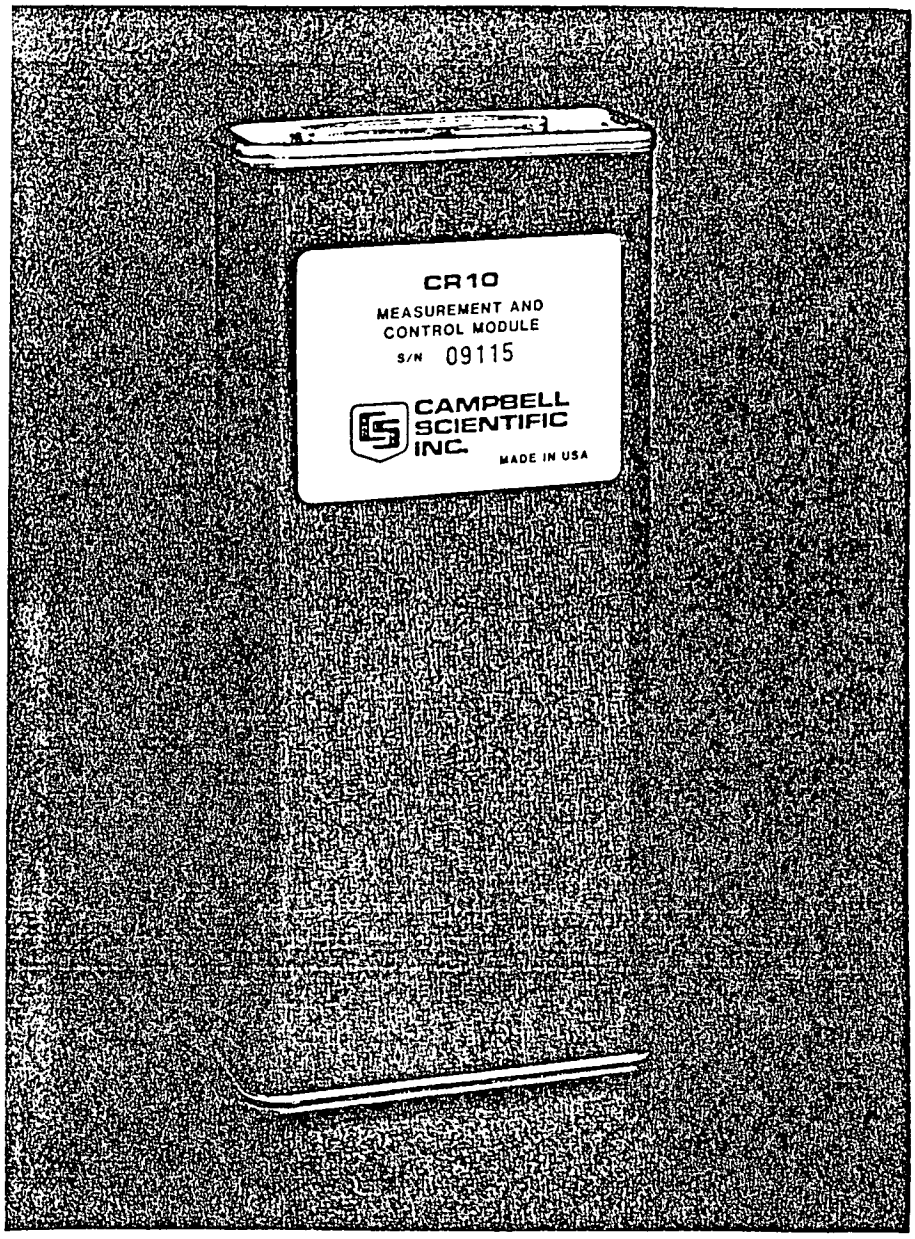

4.2.0 Program Preparation

The Campbell 21XL data logger is a general purpose device with numerous data inputs, processing and output options. It is therefore necessary to tailor the instrument for each application by preparing a set of instructions called a program.

The process of preparing a program should begin with a listing of all desired inputs and outputs and their frequency. The second step is to describe the necessary functions in words and mathematical equations. Construction of a logical program flow diagram is recommended before translating the instructions into the numerical coding utilized by the Campbell 21XL.

A copy of the program and its documentation must be made part of the project file and be included in the study report. Please refer to Section 4.2.4 for more information on the program.

Before field application, the program must be tested under controlled conditions to insure that all commands and logical controls are valid. Documentation of this test must also be included in the study file.

4.2.1 Campbell PC 208 Software Support

Although all Campbell 21XL data logger operations, including programming and data retrieval, can be accomplished through the built-in keypad and display, use of computerized support is recommended. The manufacturer has prepared the PC 208 software support package to facilitate communications between an IBM compatible PC computer and the 21XL data logger system. The package has five (5) main programs:

1. EDLOG (Datalogger Program Editor) - For development, editing and documentation of 21XL programs. The routine prompts the user and provides help with available commands and options.
2. TERM (Terminal Emulator) - A general purpose terminal emulator. Its primary use is to download programs developed using EDLOG into a 21XL data logger. "Term" also allows the user to monitor the 21XL's "real-time" data values and change the status of the 21XL's user flags and control ports.
3. SPLIT (Data Reduction and Report Generation) - A general purpose data processing program. (However Lotus 1-2-3 has been found to be a more flexible alternative).
4. TELCOM (Telecommunications Controller) - A program which allows the user to retrieve and store data from CSI dataloggers via a modem and to answer an incoming call from the datalogger or another PC.

5. SMCOM (Storage Module Communications) - A program which allows the user to retrieve all or part of the storage module's data and to transfer a data file or program to the module. This program will also "reset" the storage module (erase all memory locations). Additionally, with the use of PC210 Graph Term software from CSI, real-time graphical-display of the data can be accomplished using a laptop PC computer interfaced directly to the data-logger using the SC532 interface unit and SC12 cabling.

The physical interface between the IBM compatible PC and the CSI 21XL data logger or storage module is accomplished through a SC532 interface with SC12 cabling.

4.2.2 Practical Considerations

a) Start/Stop Sampling

Once a program is loaded into the 21XL data logger the power must remain ON to preserve the program in memory. The 21XL will immediately begin to collect data unless the program contains provision for a user-operated switch.

This can easily be accomplished by testing a user flag at the beginning of the program. For uniformity, use of flag #1 is recommended. The following program control instruction will cause the data logger to jump to the end of the program, skipping over all the intermediate instructions as long as user flag #1 is equal to zero:

```
01:   P91  IF FLAG
      21  ONE IS RESET
      0  GO TO END OF PROGRAM TABLE
```

Control over the user flag is obtained by the keypad sequence: *6AD. Flag 1 may be toggled on and off using key 1.

b) Battery Voltage

In order to read battery voltage the program must utilize input/output instruction 10 and place the result in an agreed upon location for operator access. For example, the following coding in user instruction area 2 will update the battery voltage in register 1 at each execution of the program table.

```
02:   P10  BATTERY VOLTAGE
      1  LOC:
```

4.2.3 Program Download

To download a program from the IBM PC computer to a 21XL data logger, execute the TERM terminal emulation program from the PC 208 support software package.

Connect the 9-pin ribbon connector from the SC532 interface unit to the 21XL data logger.

In response to the prompt STATION NAME: enter the appropriate air monitoring study number e.g. NAVY_L1.

In response to the prompt OPTION enter D for download.

In response to the prompt "NAME OF FILE TO DOWNLOAD", enter the program name. *NOTE: BE SURE TO USE THE SUFFIX .DLD* for the download version of the program.

Following download, the data logger will remain under computer control and will not respond to key pad inputs. Follow the instructions displayed on the IBM PC monitor to exit from the download status. This will restore access to the data logger through its key pad.

A hard copy listing of the operating program for this study can be found in the following section 4.2.4.

4.2.4 Program Listing

The following is a listing of the actual operating program for the CSI data logger for this study.

Program: CLIMATRONICS -- NAVFAC WEATHER STATION WITH RELATIVE HUMIDITY

Flag Usage: 1 = ON/OFF
1: START/STOP SAMPLING: 11 = ON 21 = OFF

Channel Usage:
[VOLTAGE SE -- STORAGE LOC 1]
WIND DIRECT -- IN AN1, EXCI EX1, REF ANG
WIND SPEED -- IN P1, REF PG
GROUND TEMP -- IN AN2, EXCI EX2, GD(PUR) ANG, GD(CL) EXG
PRECIPT -- IN P2, GD(CL & BARE) PG
BAR PRESS -- IN AN3, EXCI EX3, GD(PUR & CL) EXG, VDC +12
AIR TEMP -- IN AN5, EXCI EX4, GD(ST) ANG GD(CL) VDCG
REL HUMID -- IN AN4, EXCI EX4, GD(PUP) ANG

Excitation Channel Usage:
Continuous Analog Output Usage:
Contro21 Port Usage:
Pulse Input Channel Usage:
Output Array Definitions:

```
* 1                Table 1 Programs
      01:    2     Sec. Execution Interval

01:          P91   If Flag
ON/OFF SWITCH FOR SAMPLING - 11 TO START; 21 TO STOP
      01:    11    1 is set
      02:    0     Go to end of Program Table

02:          P10   Battery Voltage
BATTERY VOLTAGE - MUST BE >11.5 AND <16
      01:    1     Loc:
```

```
03:          P4     Excite, Delay, Volt (SE)
WIND DIRECTION  (MD=16.5)
     01:     1      Rep
     02:     5      5000 mV slow Range
     03:     1      IN Chan
     04:     1      Excite all reps w/EXchan 1
     05:     2      Delay (units .01 sec)
     06:     5000   mV Excitation
     07:     2      Loc:
     08:     .071   Mult
     09:     -16.5  Offset

04:          P3     Pulse
WIND SPEED
     01:     1      Rep
     02:     1      Pulse Input Chan
     03:     21     Low level AC; Output Hz.
     04:     3      Loc:
     05:     .2192  Mult
     06:     0      Offset

05:          P89    If X<=>F
     01:     3      X Loc
     02:     4      <
     03:     .9     F
     04:     30     Then Do

06:          P30    Z=F
     01:     0      F
     02:     3      Z Loc:

07:          P95    End
```

08: P11 Temp 107 Probe
SOIL TEMP

01:	1	Rep
02:	2	IN Chan
03:	2	Excite all reps w/EXchan 2
04:	4	Loc:
05:	1	Mult
06:	0	Offset

09: P3 Pulse
PRECIPT - TIPPING BUCKET

01:	1	Rep
02:	2	Pulse Input Chan
03:	2	Switch closure
04:	5	Loc:
05:	.254	Mult
06:	0	Offset

10: P11 Temp 107 Probe
AIR TEMP

01:	1	Rep
02:	5	IN Chan
03:	4	Excite all reps w/EXchan 4
04:	7	Loc:
05:	1	Mult
06:	0	Offset

11: P4 Excite, Delay, Volt (SE)
RELATIVE HUMIDITY

01:	1	Rep
02:	5	5000 mV slow Range
03:	4	IN Chan
04:	4	Excite all reps w/EXchan 4
05:	15	Delay (units .01 sec)
06:	5000	mV Excitation
07:	8	Loc:
08:	.1	Mult
09:	0	Offset

```
12:          P92   If time is
     01:     0     minutes into a
     02:     15    minute interval
     03:     30    Then Do

13:          P4    Excite, Delay, Volt (SE)
BAROMETRIC PRESSURE
     01:     1     Rep
     02:     5     5000 mV slow Range
     03:     3     IN Chan
     04:     3     Excite all reps w/EXchan 3
     05:     300   Delay (units .01 sec)
     06:     5000  mV Excitation
     07:     6     Loc:
     08:     .052  Mult
     09:     800   Offset

14:          P95   End
AVG AT 15 MIN INTERVALS

15:          P92   If time is
     01:     0     minutes into a
     02:     15    minute interval
     03:     10    Set high Flag 0 (output)

16:          P77   Real Time
     01:     110   Day, Hour-Minute

17:          P71   Average
7 AVG SOIL TEMP TO REL. HUM.
     01:     5     Reps
     02:     4     Loc

18:          P69   Wind Vector
WIND VECTOR - HOR. SIGMA
     01:     1     Rep
     02:     0     Samples per sub-interval
     03:     00    Polar Sensor/(S, D1, SD1)
     04:     3     Wind Speed/East Loc
     05:     2     Wind Direction/North Loc
```

WRITE TO FINAL STORAGE ON 1 HOUR INTERVALS

```
19:          P92   If time is
     01:     0     minutes into a
     02:     60    minute interval
     03:     10    Set high Flag 0 (output)

20:          P77   Real Time
     01:     110   Day, Hour-Minute

21:          P71   Average
7 SOIL TEMP TO REL. HUM.
     01:     5     Reps
     02:     4     Loc

22:          P69   Wind Vector
WIND VECTOR - HOR. SIGMA
     01:     1     Rep
     02:     0     Samples per sub-interval
     03:     00    Polar Sensor/(S, D1, SD1)
     04:     3     Wind Speed/East Loc
     05:     2     Wind Direction/North Loc

23:          P73   Maximize
WIND SPEED
     01:     1     Rep
     02:     10    Value with Hr-Min
     03:     3     Loc

24:          P74   Minimize
AIR TEMP
     01:     1     Rep
     02:     10    Value with Hr-Min
     03:     3     Loc

25:          P73   Maximize
AIR TEMP
     01:     1     Rep
     02:     10    Value with Hr-Min
     03:     7     Loc
```

WRITE TO FINAL STORAGE ON 24-HOUR INTERVALS

```
26:          P92   If time is
     01:     0000  minutes into a
     02:     1440  minute interval
     03:     10    Set high Flag 0 (output)

27:          P77   Real Time
     01:     110   Day, Hour-Minute

28:          P71   Average
AVG SOIL TEMP TO REL. HUM.
     01:     5     Reps
     02:     4     Loc

29:          P69   Wind Vector
WIND VECTOR - HOR. SIGMA
     01:     1     Rep
     02:     0     Samples per sub-interval
     03:     00    Polar Sensor/(S, D1, SD1)
     04:     3     Wind Speed/East Loc
     05:     2     Wind Direction/North Loc

30:          P     End Table 1

* 2                Table 2 Programs
     01:     0     Sec. Execution Interval

01:          P     End Table 2

* 3                Table 3 Subroutines

01:          P     End Table 3

* 4                Mode 4 Output Options
     01:     1     (Tape OFF) (Printer ON)
     02:     02    Printer 9600 Baud

* A                Mode 10 Memory Allocation
     01:     28    Input Locations
     02:     64    Intermediate Locations
```

* C			Mode 12 Security
	01:	00	Security Option
	02:	0000	Security Code

Input Location Assignments (with comments):

Key:
T = Table Number
E = Entry Number
L = Location Number

T:	E:	L:	
1:	2:	1:	Loc:
1:	3:	2:	Loc:
1:	4:	2:	Z Loc:
1:	5:	3:	Loc:
1:	7:	3:	Z Loc:
1:	9:	4:	Loc:
1:	10:	5:	Loc:
1:	14:	6:	Loc:
1:	11:	7:	Loc:
1:	12:	8:	Loc:

4.3.0 Installation

The Campbell 21XL data logger is designed to operate where the relative humidity does not exceed 90%. It is NOT hermetically sealed. Therefore, a specially designed enclosure is used to weather proof the data logger.

The Campbell 21XL normally operates on 110 volt AC power with internal sealed rechargeable batteries as an auxiliary supply in case of power interruptions. If AC power is not available, the 21XL should be reconfigured for operation from its internal batteries. The internal batteries will provide up to two month's operation per charge.

The Campbell 21XL installation will also provide mechanical protection and shelter from dust or chemicals where necessary.

To protect from lightning, it is recommended that the data logger be grounded. A 12 AWG or heavier wire should be run between a grounding terminal and a grounding rod or other earth ground. If attached to a modem, the 21XL should also be provided with transient protection on the telephone line using the DC112 surge protection kit from CSI.

4.3.1 Connecting Analog Inputs

Analog inputs in the range ± 5 volts can be input to the 21XL data logger through the analog input terminal strip. Remove two (2) screws from the cover and remove to gain access to the terminal strip.

The markings on the strip are for differential voltage measurements. For single-ended voltage measurements the numbered connectors are sequential i.e., 1 HI = #1, 1 LO = #2, 2 HI = #3 and so forth. There are several ground connections which are common.

Strain relief should be provided for the analog input lines.

Replace the terminal strip cover when the connections are completed.

4.4.0 System Operation

This section on CSI 21XL data logger operation assumes;

1) The 21XL has been programmed in accordance with Section 4.2 and

2) The 21Xl has been installed in accordance with Section 4.3

a) Check Operating Parameters

Parameter	*Key Pad Input*	*Display*	*Remarks*
• Battery Voltage	*6 RR A RR = number of register with battery data	RR: V.VVV battery voltage register number	Should be 11.5 to 16 volts
• Digital Output	*4	04:00	mode 4 selected
	A	01:01	enter 01 if necessary
	A	02:02	enter 02 if necessary
• Clock	*5	:HH:MM:SS	time displayed
	A	05:XX	display/enter year (2 digits)
	A	05:XXXX	display/enter julian date
	A	05:HH:MM	display/enter hours, minutes

b) Attach Storage Module

Connect the storage module and data logger serial I/O ports using the 9-pin ribbon connector (SC12 cable).

c) Start Data Collection

To start data collection input *6AD on the 21XL hex key pad. The display will show the status of user flags 1-8. Initially all should be zero:

00: 00: 00: 00

12 34 56 78

Press hex key 1 to set flag 1 and initiate sampling. The display will show the change:

10:00:00:00

Pressing hex key 1 again will toggle the flag off. This can be used to stop sampling but should not be necessary in normal operation.

d) Enter *0. This display will read

LOG 1

The numerals 2 and 3 may also be displayed if those program tables are in use.

This is the preferred operating mode for the system because it minimizes power for display operation.

NOTE: In normal operation it is not necessary to stop data collection. The storage module may be changed while the 21XL is running. The operator should take care not to change the module close to a scheduled output i.e., on the hour or quarter hours.

4.4.1 Operation Checks

The operator must perform periodic checks to insure that the CSI data logger is functioning properly.

a) AC Power

The status of the AC power input (if installed) should be checked on each visit to the site. Presence of AC power is indicated by a red LED adjacent to the power switch.

b) Battery Condition

Battery condition should be checked on each visit to the site. Press "*6A" on the key pad to access the input registers. "A" repetitively to step through the register until the register containing battery voltage is reached. ("B" will step back if necessary). For the normal AC/rechargeable battery configuration the voltage should be between 13.5 and 14.5 volts. If the voltage is below 13 volts, corrective action should be taken. Voltages below 11.50 volts may cause damage to the battery.

If AC power is not being supplied, take corrective action.

c) Data Collection

Data collected by the 21XL should be compared to the instruments during each visit to the site.

Press "*6A" to access the data registers. Press "A" repetitively to step through the registers. Compare the current value for each parameter to the value displayed on the appropriate instrument. Be sure to allow for differences due to intermediate processing. For example, the 21XL program for meteorological data converts observed wind speed of less than .9 mph to 0. Upon completion of the operational checks, press "*0" to return the 21XL to its optimal configuration.

4.4.2 Data Recovery

The following procedure enables the operator to transfer data from the CSI storage module to an IBM compatible PC computer. The data is transferred in ASCII format.

The storage modules are received by the Albany office staff via Federal Express and are logged in immediately upon receipt. The log entry for the storage module includes:

a) module number

b) date received

c) file name used to store and format data

d) date returned to field

The data in the modules are retrieved using a CSI to IBM PC interface system consisting of the following hardware and software:

a) 9-pin peripheral to RS-232 interface (SC) Model 532) which connects between the SM-192 data storage module and the IBM-Compatible PC RS-232 serial port.

b) CSI PC-208 support software for module read/write and clock functions. This software is menu-driven and provides for automatic transfer of the IBM's time and date to the data storage module as well as retrieving data from the module.

Once the data has been recovered, the raw data file can be manipulated and reported using various off-the-shelf PC software packages. The use of these packages will allow for mathematical and statistical computation, graphical presentation of data, and data validation.

Starting from the main menu of the SMCOM software, select the appropriate serial port option.

In response to the prompt "Is the SM232 or SM232A interface being used? (Y/N)" respond "N".

In response to the prompt "Select File Data Format:" input "C" for comma delineated ASCII format.

In response to the prompt "Enter destination file name:" input the file name. The file naming convention stipulates that the first 2 characters be the number of the current month (e.g. 09 for September), characters 3 and 4 the date of the last data recovery and characters 5 and 6 todays date. Characters 7 and 8 are assigned by the SMCOM in the event of duplicate file names, enter the file name extension as ".DAT". For example, "091520.DAT" for the data file recovered on September 20th when the previous data recovery was on the 15th.

Press any key to begin the transfer.

After review, both the formatted and raw data files are committed to hard disk storage and are backed up as part of an automated system wide back up to magnetic tape.

After reviewing the data, clear the storage module using SMCOM. Put a label on the storage module to show it was cleared and is ready for field use.

NOTE: THIS PROCEDURE WILL ERASE ALL STORED DATA. BE SURE THE DATA HAS FIRST BEEN PROPERLY READ AND STORED INTO THE IBM PC.

4.5.0 Maintenance

Packets of desiccant located inside the 21XL data logger must be replaced periodically. This should be accomplished during calibration.

The packets can be reactivated by warming them in a laboratory oven for 16 hours at 160 C (250 F).

4.6.0 Calibration

The Campbell 21XL data logger shall be calibrated before installation, and thereafter at intervals not exceeding one year. These procedures will be performed by McLaren/Hart field staff.

a) Voltage Calibration

Equipment required: Five and one half (5+) digit digital volt meter (DVM) with a resolution of 10 microvolts.

Procedure: Follow the instructions in section 14 "Calibration Procedures" of the Campbell instruction manual.

b) Clock Frequency Calibration

Equipment required: Digital frequency counter with a resolution of 0.1 microsecond.

Procedure: Follow the instructions in section 14 of the Campbell instruction manual.

TOTAL SUSPENDED PARTICULATES (TSP)

HIGH VOLUME AIR SAMPLER

V. TOTAL SUSPENDED PARTICULATES (TSP) HIGH VOLUME AIR SAMPLER

Section		Revision	Date
5.0.0	High Volume Air Sampler Quality Assurance	0	09/01/91
5.1.0	System Description	0	09/01/91
	5.1.1 Operation	0	09/01/91
	5.1.2 Installation of Filter	0	09/01/91
	5.1.3 Operational Checks	0	09/01/91
	5.1.4 Sample Handling	0	09/01/91
	5.1.5 Preventive Maintenance Program	0	09/01/91
5.2.0	Audits and Precision	0	09/01/91
	5.2.1 Hi-Vol Flow Audits	0	09/01/91
	5.2.2 Precision (Co-Located Samplers)	0	09/01/91
5.3.0	Primary Calibration Procedures	0	09/01/91
	5.3.1 High Volume Calibration Protocol	0	09/01/91
	5.3.2 Hi-Vol Flow Audit Device Certification	0	09/01/91
5.4.0	Processing TSP Data	0	09/01/91

5.0.0 High Volume Air Sampler Quality Assurance

In order to provide ambient total suspended particulate (TSP) measurements of the maximum attainable quality, the quality assurance program described in this section has been developed. It will be implemented at all sites in the McLaren/Hart ambient air monitoring study at the Portsmouth Naval Shipyard in Kittery, Maine.

The quality assurance program for TSP is designed to maintain a maximum level of data quality. This is accomplished by a series of flow rate audits, collocated samplers, and operation and laboratory checks.

The operation aspect of the program is designed to assure that the high volume sampler is operated in a manner that produces the most accurate data.

Primary calibration of the TSP mass flow controller (MFC) is initially performed by McLaren/Hart personnel prior to the commencement of the study. Recalibration is also performed at any time the mass flow controller is repaired or a flow audit of that sampler falls outside of the control limits and the cause cannot be determined and repaired in the field.

Audits will be the primary checks on the performance of the high volume sampler. Flow audits will be conducted at least once during the study for each hi-vol by operations personnel. These audits are intended to flag those hi-vols in need of repair or recalibration.

The goal of the High Volume Air Sampler Quality Assurance Program is to produce data which meet or exceed the following objectives:

1) Accuracy - accuracy is determined from the percent differences of flow audits as a 95% confidence limit as defined in the Federal 40 CFR Part 58. The accuracy should be ± 10% or better.

2) Precision - precision will be determined from the percent difference of reported concentrations between two collocated samplers as defined in the Federal 40 CFR Part 58.

3) Completeness - at least eleven (11) valid 24-hour samples are required for the study at each study site.

A further discussion of the material may be found in the USEPA *Quality Assurance Handbook for Air Pollution Measurement Systems*, Volume II, *Ambient Air Specific Methods*, EPA-600/4-77-027a which was used as a guideline for this section.

5.1.0 System Description

A 24-hour sample of air is passed through an 8" x 10" glass fiber filter, using a high volume air sampler, to determine the concentration of total suspended particulates in ambient air (less than 100 micron particle size).

The high volume air sampler is an apparatus for drawing in a relatively large volume of air (1.3 to 1.8 cubic meters per minute--46 cfm to 64 cfm) and capturing its suspended particulate matter on a filter. Concentration of particulates suspended in the atmosphere is expressed as micrograms per cubic meter of air (ug/m^3).

The sampler consists essentially of a motor-driven blower and a supporting screen for the filter ahead of the blower unit. During the sampling operation, the sampler is supported in a protective housing so that the 8" x 10" surface of the filter is in a horizontal position. The sampler is equipped with a calibrated means of measuring rate of air flow. A seven-day clock switch is used to start and stop the sampler and an elapsed time indicator to determine the number of minutes of operation. Refer to Figure 12 in Appendix B.

The TSP network at the Portsmouth Naval Shipyard utilizes the approved Federal Reference Method which complies with Federal Register Vol. 36, Nº 84, dated April 30, 1971. This consists of an air flow controller which maintains a constant rate by an electronic probe which, in turn, automatically adjusts the speed of the sampler motor to correct for variations in line voltage, temperature, pressure, and filter loading. The mass flow controller is adjustable over a range of 20 SCFM to 60 SCFM at standard conditions of 25°C and 760 mm Hg.

By maintaining a constant flow rate to within ± 1 SCFM, the average TSP concentration measured can be extremely accurate and reliable.

Additionally, the TSP (hi-vol) sampler also utilizes 1) a pressure recording device which indicates the continuous pressure drop across the hi-vol motor and serves to verify the valid operation of the sampler; and 2) an elapsed time indicator (ETI) which shows the total sampler "on" time during the sampling period. The ETI reading is used to determine the total ambient air flow through the glass fiber filter.

5.1.1 Operation

Proper operation and maintenance of any instrument is essential to produce results which are reliable and meaningful. The accuracy and/or validity of data obtained from this method depends upon equipment performance and the proficiency with which the operator performs his various tasks. Deviations from the recommended operational procedure may result in the collection of invalid data or reduce the quality of the data. A site log book maintained by the operator should include most recent calibration/audit data and any schedule(s) for future maintenance and calibrations. Initial and final flows for each sampling period are also recorded. This section describes the normal operation and maintenance procedures for the high volume air sampler.

The following log sheets are used by field operators for recording hi-vol data (TSP). Preliminary checks for time of sample run and air flow rates are also made before the data are validated. Sample run times must be 24 ± 1 hr. (1380 - 1500 mins) and initial and final air flow rates should be maintained to within 50 SCFM ± 1 SCFM by the mass flow controller used in the sampler.

5.1.2 Installation of Filter

In a protected location, a clean filter is removed from the large envelope on a manila tag card. The glass fiber filter is then slid onto the filter holder screen, handling it as little as possible. (The filter must be placed onto the lower plate with the numbered-side down.) The upper plate containing the rubber gasket is placed over the filter and screen, aligned properly, then the thumb screws are tightened.

After the final flow rate and elapsed time indicator (ETI) readings are taken for the previous run, the exposed filter is removed from the hi-vol by loosening the four wing nuts and removing the upper plate. Next, a new weighed unexposed filter is placed on the filter holder and the four wing nuts tightened until they are snug. Do not over-tighten. Excessive tightening may cause the filter to stick to the gasket and/or result in permanent damage to the gasket. The gasket will form an airtight seal on the outer edge (1/2 inch) of the filter. When aligned correctly, the edges of the filter should be parallel both to the edges of the screen behind it and to the faceplate gasket above it. The result of poorly aligned filters appear as uneven white borders around the filter. An irregular border results from a gasket in poor condition. Replace as required.

NOTE: When the exposed filter is removed from the shelter (and before the new filter is installed), the inside surfaces of the shelter lid and area around filter holder should be cleaned of loose particles with a clean rag or brush.

5.1.3 Operational Checks

Initial Flow-Rate Measurements of the Sampler--

Make flow-rate measurement while the sampler is at normal operating temperature. This requires a warmup time of at least five minutes before a valid measurement can be obtained.

After a warmup period, read the flow rate indicating device (pressure recorder, orifice-manometer, or magnehelic). With a mass flow controller used, the reading should indicate the set point flow rate of 50 SCFM obtained during the primary calibration.

If the pressure recorder readings are much lower than 50 SCFM with a new filter in place the system should be checked. The motor may need maintenance or replacement if the mass flow controller can not be adjusted to increase the flow rate reading.

NOTE: The motor should never run without a filter in place. Without a filter the flow rate is too great and damage may be incurred by the mass flow controller.

Final Flow Rate Measurements of the Sampler--

The same procedure is used for final flow-rate measurements after the completion of the 24-hour sampling procedure. Pressure recorder readings of less than 45 SCFM indicate a possible change in the calibration set point of the flow controller.

Verify the status of the set point using a GMW flow calibration device as described in the appropriate section. If flow has changed, then average the initial and final flow readings to obtain the total air flow rate for the sample run. Readjust set point to proper level for next run.

Time Measurements--

Start and stop times should be 12:00 midnight to 12:00 midnight for a 24-hour sampling period. Note the times on the log sheet provided for this sampler. At each filter change, the trippers of the 7-day time should be adjusted for the next sampling period. Current time, as indicated on the timer dial, should be checked for accuracy after every run. To adjust to current time, turn the time dial clockwise only.

An elapsed time indicator (ETI) is used to indicate the total number of minutes each sample ran. Under "Elapsed Time Indicator - Start" record the ETI reading before the run date. After the run date, record the "ETI - Stop". The month and day on which the sample was run should also be recorded in the appropriate spaces on the TSP data log sheet.

Samples for sampling periods less than 23 hours or greater than 25 hours should be noted and sent to the laboratory with such information clearly stated. Such samples may be invalidated depending upon the length of the exposure period.

5.1.4 Sample Handling

Removing Exposed Filter--

Place the sampler in the servicing position (top hinged up). Remove the faceplate of the filter cartridge, if used, and remove the exposed filter from the supporting screen by sliding a manila tag card under an edge and lifting. With the exposed side up, fold the exposed filter side inward and lengthwise at the middle. If the collected sample is not centered on the filter (i.e., the unexposed border is not uniform around the filter), fold so that deposit touches only the deposit on the opposite side. An improperly folded filter reduces the value of the sample for some analyses in which the collected sample must be subdivided into equal portions.

Place the filter in a manila tag card folder.

Place the folder containing the exposed filter in a glassine envelope. The use of the glassine envelope ensures that all particulate matter collected on the filter will remain with the filter. This envelope is then placed in a mailing container with a copy of the completed log sheet and then sent to the laboratory by courier service. The laboratory, in turn, should make sure that all particulate matter found loose in the glassine envelope is also removed with the exposed filter.

Routine Checks--

The following listed checks should be made when removing an exposed filter:

1) Check the filter for signs of air leakage. Leakage may result from a worn faceplate gasket or an improperly installed gasket. If a leakage is observed, void the sample, determine the cause, and take corrective action before starting another sampling period. Generally, a gasket deteriorates slowly, and the operator can decide well in advance (by increased fuzziness of the sampling outline) to change the gasket before a total failure results.

2) Visually inspect the gasket face to see if glass fibers from the filter are being left behind, resulting from over-tightening of the faceplate wing nuts and curing the filter along the gasket interface.

3) The operator must check the exposed filter for physical damage that may have occurred during sampling or after sampling. Physical damage to the filter after sampling does not always invalidate the sample as long as all pieces of the filter are included in the folder. However, any loss of sample due to leakages during the sampling period or to loss of loose particulates from the filter after sampling (e.g., loss of particulates when folding the filter) will invalidate the sample.

4) The appearance of the particulates should be checked. Any changes from the normal color, for example, may indicate new emission sources or construction activity in the area. The change should be noted on the high-volume sample coding form, along with any obvious reasons for the change.

Any comments pertinent to the quality of the sample or the general operation of the sampler must be recorded along the margin of the log sheet under "Comments". Information regarding operation of the sampler is also recorded in the "Operating Log of Air Sampler". Reasons for not collecting a sample should be recorded on this form. A record of each sample run is also kept here.

5.1.5 Preventive Maintenance Program

A schedule of preventive maintenance should be maintained for each sampler by the operator.

Sampler Motor--

Motor brushes require replacement about every 3 months or 15 runs for motors operating without a 90-volt transformer. The brushes should also be checked for uneven wear after this period of time. Such wear may be an indication of motor problems and may necessitate replacement of the motor if it is great enough.

To replace motor brushes, remove the threaded top and slide the whole motor out of the motor housing. The brushes are each held in place by two small screws and a bracket. When installing the new brushes, make sure they seat properly against the armature. Some of the brushes are slotted to ensure proper fit. Be sure to replace the old brushes with the same style, as there are several different types in use. After installing new brushes, the motor should be run for about 20 minutes before taking any readings to burn the brushes in. The motor should be run against some resistance, either a Nº 18 calibration plate or a clean filter (not to be used for sampling).

Record all sampler brush changes with date performed and operator's initials in the sampler log sheet and on a label which is to be attached to the sampler motor.

Faceplate Gasket--

A worn faceplate gasket will eventually result in poor or invalid samples. A properly exposed filter should have a clear, sharp edge between the exposed center and the clean filter border. Any decrease in the sharpness of this interface indicates the need for a new faceplate gasket.

The old gasket can be removed with a knife and the surface properly cleaned. A new gasket is then attached to the faceplate with rubber cement.

If the faceplate is bent, it should be replaced.

Sampler Adapter--

Although leaks in the filter adapter are not common, they occasionally occur at the welded seams or guide pins on the top surface. If a defect is suspected, assemble the adapter to the motor, install a filter for resistance and apply a soap solution (Snoop) to the suspect problem area. Remove the adapter and examine the inside for the presence of soap solution. If a leak is indicated, the adapter should be replaced.

Leakage amy also occur at the bottom of the adapter where it screws onto the motor. This usually results from poor mating of the threads on the motor and filter adapter. To test, tighten knurled ring onto motor. If the ring is tight and the round gasket is in place, the filter and adapter head will not turn with respect to the motor. If it does a different motor/filter adapter pairing is necessary.

Miscellaneous Equipment--

All tygon tubing for connecting the pressure tap of the hi-vol motor to the pressure recorder should be checked periodically for proper connections and any cracking or deterioration of any other rubber components. All electrical connections should be checked. Any exposed wires should either be covered with electrical tape or replaced with new cord.

No regular maintenance is required for the seven-day timer, elapsed time indicator, or magnehelic gauge. If any of these fail to operate properly, they should be replaced.

Some shelters are not anodized as is the case with new ones and will require surface treatment to avoid oxide buildup. Wire brushes, steel wool, and cans of clear spray paint are available for touch up work. WD-40 can be used to lubricate hinges and hasps. Damaged shelters should be returned to central office for repair or salvage.

Sampler Breakdown Troubleshooting--

If the sampler motor fails to operate, a few checks can be made in the field to locate the faulty component.

Start with the power source. Check the lead cord for proper connection at the power outlet and at the female end where it connects with the 7-day timer.

There are three major areas where power can be interrupted: 1) motor; 2) mass flow controller; and 3) timer. Check the mass flow controller by plugging the motor directly into the timer outlet. Manually turn the timer on. If the motor runs, the mass flow controller is faulty and its transducer should be checked for proper placement. If ok, then replace controller. The timer can also be checked by noticing if the ETI is advancing when the manual switch is on; however, the timer should also be checked as described above. If the motor fails to operate despite these checks, the motor is at fault and should be repaired or replaced.

5.2.0 Audits and Precision

Audits--

Proper implementation of an auditing program will serve a two-fold purpose: 1) to screen the data to detect whether the data quality is adequate; and 2) to determine data quality in terms of the precision.

Performance Audits--

Flow checks will be conducted between sample runs for every sampler in use in the study. In addition, flow audits will be conducted at least once during the study to independently determine the status of the samples.

Systems Audit--

The system audit consists of random on-site inspections and review of the quality assurance system used for the total measurement system (sample collection, sample analysis, data processing, etc.). System audits are normally a qualitative appraisal of system quality. A systems audit should be conducted at the beginning of a new monitoring system and as appropriate thereafter to audit significant changes in system operation.

Precision--

Collocated hi-vols are used to estimate precision. These precision checks will be carried out in accordance with 40 CFR Part 58 as published May 10, 1979 at seven (7) sites of the study.

5.2.1 Hi-Vol Flow Audits Conducted by McLaren/Hart

Frequency--

Each site must be audited at least once during the study.

Equipment--

The portable audit equipment used is a GMW Model 25 or 28 orifice-manometer calibration kit. The calibration kits are certified by GMW as transfer flow standards against a primary Roots-Connersville rotary dry gas meter. Each calibration kit is supplied with a calibration curve (orifice static pressure [▲H] vs. air flow rate [SCFM]).

Procedure--

1) Remove existing filter, store in a safe place, and replace with a clean, unweighed filter (of the same type as the existing filter) and secure with adapter plate supplied with calibration kit. Check alignment of face plate gasket and tighten securely to prevent any leaks.

2) Attach GMW-25 calibrator to adapter plate without any orifice plates (or GMW-28 which does not use plates) and make sure that all rubber gaskets are between all metal to metal contacts. Hand tighten until gaskets are firmly compressed.

3) Attach manometer to support using magnetic holder and open both valves used to prevent green manometer fluid from leaking during transport. Attach one line to GMW calibrator port; the other end of manometer is open to atmosphere. Adjust scale on manometer for zero reading. (The fluid in the manometer is distilled water with fluorescein dye with a specific gravity of 1.00 and a freezing point of 32°F. No other fluid may be substituted, use only the fluid supplied with the audit device.)

4) With the audit device and the clean hi-vol filter in place, operate the high-volume sampler in its normal manner. Allow motor to run for at least five minutes before taking the first reading. Record audit device manometer readings (left and right) and corresponding hi-vol pressure recorder readings on the data sheet in the proper calibration spaces. Look up standard air flow rate(s) from supplied calibration curve based on audit device manometer reading and record on form. Also record the corresponding indicated air flow rate on the pressure recorder and calculate the percent difference of two readings as follows:

$$\frac{QInd - Qact}{Qact} \times 100\%$$

If greater than ± 10% for any one check, readjust the setpoint of the mass flow controller to 50 SCFM.

5) Remove and stow the GMW-25/28 calibration kit. Install the clean, weighed glass fiber filter and prepare timer for the next sample run. Note ETI reading at this time so that the ETI start reading can be adjusted accordingly for the next sample.

5.2.2 Parallel (co-located samplers) Measurements for Precision

At selected sites in the monitoring study (7 samplers), a second TSP sampler will be operated. The two duplicate samplers will be located at the same elevation (~ 2 meters) and between 2 and 4 meters apart. One sampler at each location is designated beforehand as the official sampler; the identity of each sampler must be maintained. Calibration, sampling and analysis must be the same for both samplers. The differences in concentration between the official and duplicate samplers are used to calculate precision as shown below:

Xi = Concentration of official sampler (ug/m^3)

Yi = Concentration of duplicate sampler (ug/m^3)

$di = \frac{(Yi - Xi)\,100}{Xi}$ = percent difference

$dj = \Sigma\, di/n$ = average percent difference for the jth Hi-vol pair

$Sj = \frac{\Sigma\, di^2 - (\Sigma\, di)^2/n}{n - 1}\ ½$ = standard deviation for the jth Hi-vol pair

The 95 percent probability limits for the jth Hi-vol pair are calculated from:

Upper 95% probability limit = $dj + 1.96\ Sj/\sqrt{2}$

Lower 95% probability limit = $dj - 1.96\ Sj/\sqrt{2}$

Precision for TSP for this study is calculated as follows (assumes different numbers of paired measurements are made at collocated sites):

$D = \frac{\Sigma\, nidi}{\Sigma(ni - 1)}$ = average %

$S_a = \frac{\Sigma(ni - 1)S^2}{\Sigma(ni - 1)}\ ½$ = pooled standard deviation

Upper 95 Percent Probability Limit = $D + 1.96\ Sa/\sqrt{2}$

Lower 95 Percent Probability Limit = $D - 1.96\ Sa/\sqrt{2}$

At low concentrations agreement between the measurements of collocated samplers, expressed at 95% probability limits, may be poor. Therefore a tally is kept for each sample measuring less than 20 ug/m^3.

The four individual variables that can be checked to determine the performance of the TSP sampling system are as follows:

1) Clean filter weighing
2) Flow rate calibration
3) Exposed filter weighing
4) Data processing

The use of collocated samplers is a convenient method to check the resultant of these individual variables. Out of control values imply errors in one or more of the samples collection and analysis steps. The precision check program is designed to cover combinations of sample collection, weighing, and data processing and will document the overall performance of independent actions involved.

When possible, sites with the highest concentrations are to be selected for this program, and operated in accordance with routine procedures. The result of both the official and duplicate hi-vols sampling will be reported. The precision limits determined from the collocated samplers will be used to validate data for TSP in the study.

Proper siting and exposure is essential. The two hi-vol samplers should be adjacent but no closer than 6 feet (2M) to avoid cross recirculation. Two complete systems should be used including separate timers. Operation should be in strict accordance with the routine procedures given in this section.

Collocated hi-vols will be identified on their respective TSP log sheet. All collocated hi-vols will be distinctively marked as such on the outside front portion of the shelter roof.

5.3.0 Primary Calibration Procedures

Preliminary calibrations are required of all sampling equipment and sub-components such as elapsed time indicators, etc. in order to establish the accuracy level of the equipment used. The following procedures are used to check such accuracy and to be used as part of the overall Quality Assurance Program.

Elapsed Time Indicator--

Elapsed Time Indicators (ETI) should be checked for accuracy against a timepiece of know accuracy prior to being placed in service.

Allow the ETI and the timepiece to run simultaneously for a 24-hour period. An error of more than two minutes warrants an adjustment or replacement of the indicator.

Record results of these checks in the time calibration log sheet, Form TCAL-1, found in Appendix A.

Seven-Day Timer--

Every timer, prior to field use, should be checked for accuracy using the calibration procedure outlined below.

The following steps outline the calibration procedure:

1) Plug the timer into a standard 110-volt power source. Several timers may be plugged into a common source.
2) Adjust the dial (turn clockwise only) to read the correct current time and day.
3) Set the trippers of a 24-hour test period. Try to make this setting at least two hours before the actual start time.

4) Plug a test light into a female outlet of the timer and manually check for power with the ON-OFF switch.

5) Record the initial ETI reading.

6) Allow the system to operate for the 24-hour test period and determine the total elapsed time by subtracting the initial ETI reading from the final reading.

If the total elapsed time is within the ± 15 minutes for a 24-hour period, the timer is acceptable for field use.

If the total elapsed time is not within these limits, reset the trippers and repeat the test.

Sampler--

Each sampler must be calibrated prior to the commencement of the study.

A GMW Model 25 or 28 orifice-manometer calibration kit, which has been certified by GMW as a transfer flow standard against a primary Roots-Connersville rotary dry gas meter, is supplied with a calibration curve (orifice static pressure [▲H] vs. air flow rate [SCFM]) for use in calibrating the sampler.

Procedure--

1) Remove existing filter, store in a safe place, and replace with a clean, unweighed filter (of the same type as the existing filter) and secure with adapter plate supplied with calibration kit. Check alignment of face plate gasket and tighten securely to prevent any leaks.

2) Attach GMW-25 calibrator to adapter plate without any orifice plates (or GMW-28 which does not use plates) and make sure that round rubber gaskets are between all metal to metal contacts. Hand tighten until gaskets are firmly compressed.

3) Attach manometer to support using magnetic holder and open both valves used to prevent green manometer fluid from leaking during transport. Attach one line to GMW calibrator port; the other end of manometer is open to atmosphere. Adjust scale on manometer for zero reading. (The fluid in the manometer is distilled water with fluorescein dye with a specific gravity of 1.00 and a freezing point of 32°F. No other fluid may be substituted, use only the fluid supplied with the audit device.)

4) With the flow calibration device and the clean hi-vol filter in place, operate the high-volume sampler in its normal manner. Allow motor to run for at least five minutes before taking the first reading. Record the flow calibration device's manometer readings (left and right) and corresponding hi-vol Dickson pressure recorder readings on the data sheet in the proper calibration spaces. Look up standard air flow rate(s) from supplied calibration curve based on the flow calibration device manometer reading and record on form. Also record the corresponding indicated air flow rate on the Dickson pressure recorder and calculate the percent difference of two readings as follows:

$$\frac{QInd - Qact}{Qact} \times 100\%$$

Adjust the setpoint of the mass flow controller to give a manometer reading which corresponds to 50 SCFM on the flow calibration device. Also adjust the Dickson pressure recorder until 50 SCFM is indicated.

5) Remove and stow the GMW-25/28 calibration kit. Install a clean, weighed glass fiber filter and prepare time for the scheduled sample run. Note ETI reading at this time so that the ETI start reading can be adjusted accordingly for the next sample.

5.3.1 High Volume (TSP) Sampler Calibration Protocol

High volume (TSP) sampler flowrates are calibrated using a certified flow calibration device (GMW25 or 28) which has been calibrated against a Roots-Connersville Positive Rotary Dry Gas Meter. The Roots-Connersville is considered a primary field standard. The Roots-Connersville gas meter is certified against the NBS standard by the manufacturer supplying the certified air flow calibration device. The certification of the flow calibration device is good for one (1) year as a transfer standard at which time the device must be recalibrated against a primary standard.

5.3.2 Hi-Vol (TSP) Flow Audit Device Certification

Equipment: The audit device is a GMW25 or 28 calibration kit equipped with a GMW35 top loading adapter. Certification of the audit device requires an FH2100 filter holder (this unit is similar to the standard orifice cone adapter except it does not have orifice or pressure drop connection) and a primary standard Roots-Connersville positive rotary dry gas meter.

Frequency: The GWM25/28 calibration kit must be recertified every twelve (12) months by either the manufacturer or by another certified source. Recertification procedure is as follows:

1) Assemble the equipment as follows:

   a) Attach the FH2100 filter holder with round rubber gasket directly to the Roots-Connersville Meter. Firmly compress gasket by hand tightening.

   b) Secure the GMW35 adapter to the filter holder with a new face place gasket and with one clean filter in place. Insure that the filter is the current type authorized for use. Check alignment of the gasket and tighten securely to prevent leaks.

   c) Attach the GMW25 or 28 calibrator to the adapter with a round rubber gasket but without any orifice plates. Hand tighten firmly to prevent leakage.

   d) Attach one leg of manometer to the nipple of the calibrator with the other leg fully open to atmosphere.

2) Perform the calibration of the audit device by the following procedure outlined below using a single filter and varying the orifices in the audit device as follows:

- 1st run -- no orifice plate
- 2nd run -- 18 hole orifice plate installed if using the GMW-28 / Fully Open Position (Nº 1) if using the GMW-28
- 3rd run -- 13 hole orifice plate installed / Position Nº 2
- 4th run -- 10 hole orifice plate installed / Position Nº 3
- 5th run -- 7 hole orifice plate installed / Position Nº 4

The orifice/manometer flow calibration device is calibrated by:

a) Passing one-hundred cubic feet through the orifice.

b) Recording the time for this quantity of air to pass through the orifice.

c) Measuring the difference between existing atmospheric pressure and the pressure at the inlet of the gas meter. This provides a means to convert the volume of the air passing through the meter to the corresponding volume at existing atmospheric pressure.

d) Calibration curve data is generated by running the system and varying the orifice plates* in place. Four calibration points are obtained by running the hi-vol with each of several orifice plates*.

e) Calibration curve is obtained by plotting flow rate versus orifice/manometer reading on log-log paper. The resultant curve is described by the equation $Q = a(\Delta H)^b$, where "a" is the intercept and "b" is the slope of the log-log curve.

**Assuming GMW-25 is used.*

3) The specific calibration steps are as follows:

a) Attach flow calibration device to the primary standard.

b) Zero the water manometers by sliding their scales until the zero on the scale is level with the bottom of the meniscus.

c) Run hi-vol motor for a warm-up period of five minutes.

d) Secure filter holder on top of adapter with no (zero) filters in place.

e) Record temperature and barometric pressure on the calibration form given below.

f) Record the pressure drop across the orifice and the pressure drop at the inlet of the gas meter as shown on the two manometers.

g) Start the timer and let it run until 100 cubic feet of air, as indicated by the gas meter, have passed through the orifice. Record the elapsed time.

h) Remove filter holder from adapter and place on filter squarely over screen. Secure holder to adapter over filter, taking care that there are no gaps at the edges between the holder gasket and filter.

i) Repeat steps g and h.

j) Insert the first orifice plate and then repeat steps g and h.

k) Insert the second orifice plate and then repeat steps g and h.

l) Repeat steps g and h for each of the remaining orifice plates.

<u>Note</u>: *When inserting orifice plates, make sure that the round rubber gaskets are installed and are firmly compressed.*

4) Calculations Description:

The series of calculations listed below are required to correct the flow to standard temperature and pressure conditions and to correct for any error, if applicable, in the Roots-Connersville meter based on prior calibration of the Roots-Connersville meter. Flow rate correct to STP (25.0° C and 29.92" Hg) versus orifice pressure drop are then plotted on log-log paper to obtain a straight line. Specific steps are:

a) Obtain observed flow rate by dividing 100 (cubic feet of air passing through orifice) by the elapsed time.

b) Convert the gauge pressure (partial vacuum) at the inlet of the gas meter from inches of water vacuum to inches of mercury vacuum by dividing inches of water by 13.6 (specific gravity of mercury).

c) Obtain the absolute pressure at the inlet of the gas meter by subtracting the gauge pressure at the inlet of the gas meter from the atmospheric pressure, both in inches of mercury.

d) Correct, because of error in the gas meter, where applicable, observed flow rate to corrected meter flow rate by reference to a corrected meter flow rate table (corrected flow rate table is based upon a prior calibration of the Roots-Connersville meter).

e) Obtain the room condition flow rate by multiplying the corrected meter flow rate by the ratio of the absolute pressure at the meter inlet to atmospheric pressure.

f) Correct the room condition flow rate to STP conditions flow rate by multiplying room condition flow rate by a correction factor. The correction factor is equal to:

$$\left[\frac{273.15 + 25.0}{273.15 + \text{Room Temp.°C}} \times \frac{\text{Barometric Pressure in } H_g}{29.92 \text{ inches } H_g}\right]^{1/2}$$

g) Obtain a calibration curve by plotting STP flow rate versus pressure drop across the orifice on log-log paper, resulting in a straight line described by the equation:

$Q = a(\Delta H)^b$

where,

Q = air flow rate, cubic feet per minute

ΔH = pressure drop across the orifice, inches of water

a = intercept (value of Q when ΔH equals one)

b = slope = $(\log Q - \log a)/\log \Delta H$

5) At the completion of the certification procedure attach the calculated slope and intercept values to the calibration kit with the date of the calibration certification.

6) When returning the audit device to the field insure that a sufficient quantity (12 or more) of currently authorized hi-vol filters have been provided with the calibration kit for field use.

5.4.0 Processing TSP and Heavy Metals Data

TSP filters have been purchased by the subcontracting laboratory and supplied to the study after identification, desiccation, and tare weighing.

The weighed filters are then used and returned to the laboratory for desiccation, re-weighing and analysis for total suspended particulates and heavy metals. All information on tare weights of these filters are kept by the laboratory. All other sampling information is kept on field sampling log sheets of which a copy is supplied to the laboratory for its information.

The laboratory completes its analyses, complete its records on each exposed filter including all analytical results and forwards this information to McLaren/Hart, Albany for review and comment where necessary. These data are validated by McLaren/Hart and then submitted as final results.

PM_{10} INHALABLE PARTICULATES

VI. PM_{10} INHALABLE PARTICULATES

Section		Revision	Date
6.0.0	PM_{10} Air Sampler Quality Assurance	0	09/01/91
6.1.0	System Description	0	09/01/91
	6.1.1 Operation	0	09/01/91
	6.1.2 Installation of Filter	0	09/01/91
	6.1.3 Operational Checks	0	09/01/91
	6.1.4 Sample Handling	0	09/01/91
	6.1.5 Preventive Maintenance Program	0	09/01/91
6.2.0	Audits and Precision	0	09/01/91
	6.2.1 PM_{10} Flow Audits	0	09/01/91
	6.2.2 Precision (Co-Located Samplers)	0	09/01/91
6.3.0	Primary Calibration Procedures	0	09/01/91
	6.3.1 PM_{10} Sampler Calibration Protocol	0	09/01/91
	6.3.2 PM_{10} Flow Audit Device Certification	0	09/01/91
6.4.0	Processing PM_{10} Data	0	09/01/91

6.0.0 VOC Canister Sampler Quality Assurance

In order to provide PM_{10} (inhalable particulates) measurements of the maximum attainable quality, the quality assurance program described in this section has been developed. It will be implemented at all sites in the McLaren/Hart ambient air monitoring study at the Portsmouth Naval Shipyard in Kittery, Maine.

The quality assurance program for PM_{10} monitoring is designed to maintain a maximum level of data quality. This is accomplished by a series of flow rate audits, collocated samplers, and operation and laboratory checks.

The operation aspect of the program is designed to assure that the PM_{10} sampler is operated in a manner that produces the most accurate data.

A Primary Calibration of the PM_{10} sampler is initially performed by McLaren/Hart personnel prior to the commencement of the study. Recalibration is also performed at any time the PM_{10} sampler is repaired or a flow audit of that sampler falls outside of the control limits and the cause cannot be determined and repaired in the field.

Audits will be the primary checks on the performance of the PM_{10} sampler. Flow audits will be conducted at least once during the study for each sampler by operations personnel. These audits are intended to flag those canister samplers in need of repair or recalibration.

The goal of the PM_{10} Sampler Quality Assurance Program is to produce data which meet or exceed the following objectives:

1) Accuracy - accuracy is determined from the percent differences of flow audits as a 95% confidence limit as defined in the Federal 40 CFR Part 58. The accuracy should be ± 10% or better.

2) Precision - precision will be determined from the percent difference of reported concentrations of PM_{10} between two collocated samplers as defined in the Federal 40 CFR Part 58.

3) Completeness - at least eleven (11) valid 24-hour samples are required for the study at each study site.

A further discussion of Quality Assurance Procedures may be found in the USEPA *Quality Assurance Handbook for Air Pollution Measurement Systems*, Volume II, *Ambient Air Specific Methods*, EPA-600/4-77-027a which was used as a guideline for this section.

6.1.0 System Description

The Andersen/GMW PM_{10} (Model ACCU-VOL IP-10-70) high volume air sampler is designed to sample inhalable air borne particles with aerodynamic diameters of smaller than or equal to a nominal 10 micrometers. This sampler meets the requirements as specified in the USEPA's revised *National Ambient Air Quality Standards for Particulate Matter* of July 1, 1987. This new standard is referred to as the PM_{10} standard (particulate matter - 10 micrometers).

The PM_{10} sampler used in this study has been tested and approved by the USEPA as a reference method for PM_{10} with the sampling inlet head in compliance with the specifications of RFPS-1287-063, dated December 1987.

6.1.1 Operation

The PM_{10} sampler consists of a specially designed sample inlet head which attaches to the GMW-manufactured high-volume air sampling housing and which is designed to separate particles smaller than 10 microns (aerodynamic diameter) from the larger particles of up to 100 microns (classified as total suspended particulates). Due to the flow path design of the PM_{10} inlet head, only 10 microns (or smaller) particles pass through the inlet head and are deposited onto the 8-inch x 10-inch glass fiber hi-vol filter. The inlet head includes a removable greased collection plate to prevent larger particles from passing through at sites with high concentrations of coarse particles. The greased plate is periodically cleaned and regreased when the particulate matter has been deposited in sufficient quantity (as a guide, clean and regrease after a maximum of fifteen 24-hour sampling runs).

The PM_{10} sampler also consists of a mass flow controller to maintain air flow rates to 40 SCFM (set point for this study); an elapsed time indicator (ETI); a 7-day timer to control "on" and "off" cycles of the sampler; and a pressure transducer flow recorder to provide a record of the air flow rates during the 24-hour sampling period. The PM_{10} sampler utilizes a standard hi-vol blower motor operating at 115 VAC, 60 Hertz.

Pre-weighed quartz glass fiber PM_{10} hi-vol filters are used for sampling. These filters are desiccated and weighed and then released for field use. Upon exposure, these filters are returned to the laboratory, reweighed after proper desiccation, and the tare weight differences reported. With the total air flow through the filter, an ambient concentration of PM_{10} particulate matter can be determined.

The use of a mass flow controller maintains a constant air flow rate of 40 SCFM throughout the sampling period regardless of filter loading, voltage variation, or ambient temperature and pressure conditions. The ETI maintains the total sampling time and the pressure transducer recorder provides a visual indication of the operational status of the system during the sampling period.

6.1.3 Operational Checks

Initial Flow-Rate Measurements of the Sampler--

Make flow-rate measurement while the sampler is at normal operating temperature. This requires a warmup time of at least five minutes before a valid measurement can be obtained.

After a warmup period, read the flow rate indicating device (pressure recorder, orifice-manometer, or magnehelic). With a mass flow controller used, the reading should indicate the set point flow rate of 40 SCFM obtained during the primary calibration.

If the pressure recorder readings are much lower than 40 SCFM with a new filter in place the system should be checked. The motor may need maintenance or replacement if the mass flow controller can not be adjusted to increase the flow rate reading.

Final Flow Rate Measurements of the Sampler--

The same procedure is used for final flow-rate measurements after the completion of the 24-hour sampling procedure. Pressure recorder readings of less than 36 SCFM indicate a possible change in the calibration set point of the flow controller.

Verify the status of the set point using a GMW 25 or 28 flow calibration device as described in the appropriate section. If flow has changed, then average the initial and final flow readings to obtain the total air flow rate for the sample run. Readjust set point to proper level for the next scheduled run.

NOTE: A minimum of 90 VAC line voltage is necessary to ensure proper operation.

Time Measurements--

Start and stop times should be 12:00 midnight to 12:00 midnight for a 24-hour sampling period. Note the times on the log sheet provided for this sampler. At each filter change, the trippers of the 7-day time should be adjusted for the next sampling period. Current time, as indicated on the timer dial, should be checked for accuracy after every run. To adjust to current time, turn the time dial clockwise only.

An elapsed time indicator (ETI) is used to indicate the total number of minutes each sample ran. Under "Elapsed Time Indicator - Start" record the ETI reading before the run date. After the run date, record the "ETI - Stop". The month and day on which the sample was run should also be recorded in the appropriate spaces on the TSP data log sheet.

Samples for sampling periods less than 23 hours or greater than 25 hours should be noted and sent to the laboratory with such information clearly stated. Such samples may be invalidated depending upon the length of the exposure period.

6.1.4 Sample Handling

Removing Exposed Filter--

Raise the sampler inlet by releasing the six shelter pan draw-catches and gently tilting back the inlet until the shelter pan support strut is locked in the second position. It should be noted that the GMW G3000 filter cartridge is required on all such PM_{10} samplers for the installation and removal of the filters. Before removing the filter, inspect it for damage or improper placement. Record all observations and then remove the exposed filter from the supporting screen by sliding a manila tag card under an edge and lifting. With the exposed side up, fold the exposed filter side inward and lengthwise at the middle. If the collected sample is not centered on the filter (i.e., the unexposed border is not uniform around the filter), fold so that deposit touches only the deposit on the opposite side. An improperly folded filter reduces the value of the sample for some analyses in which the collected sample must be subdivided into equal portions.

Place the filter in a manila tag card folder and then insert the folder containing the exposed filter into a glassine envelope. The use of the glassine envelope ensures that all particulate matter collected on the filter will remain with the filter. This envelope is then placed in a mailing container with a copy of the completed log sheet and then sent to the laboratory by courier service. The laboratory, in turn, should make sure that all particulate matter found loose in the glassine envelope is also removed with the exposed filter.

> *NOTE: The greased collection plate should be checked routinely for overloading. If overloading has occurred, clean and then regrease before the next run.*

Installing New Filter--

Load the G3000 filter cartridge with a quartz glass fiber filter by first loosening the four nuts that clamp the cartridge together and removing the upper portion of the filter cartridge. Inspect the filter and then center the filter on the cartridge support screen. Each filter has an "up" side on which the particulate matter is deposited. This side is the rough side. The I.D. number is embossed on the opposite side (smooth side). The embossed side faces "down" on the filter screen support of the sampler.

After loading the filter on the filter cartridge, replace the top cover and tighten the nuts. If the cartridge is equipped with a protective, snap-on screen, cover the cartridge. This snap-on screen must be removed before the sampler is ready to run.

Raise the sampler's PM_{10} inlet and lock into place as mentioned in the prior discussion on removing an exposed filter and inspect the filter screen for damage and any deposits or foreign matter. Clean the screen if such material is found on it. Install the filter cartridge (without snap-on screen) by centering it on the filter screen. Tighten the four swing bolts by tightening at diagonally opposite corners simultaneously to ensure even compression of the sealing gasket. Close the PM_{10} inlet head and tighten down the six pan catches to secure the head to the sampler shelter.

Routine Checks--

The following listed checks should be made when removing or installing a filter on the PM_{10} sampler:

1) Check the filter for signs of air leakage. Leakage may result from a worn filter holder-sealing gasket located beneath the filter screen or a worn or an improperly installed gasket in the filter cartridge holder. If a leakage is observed, void the sample, determine the cause, and take corrective action before starting another sampling period. Generally, a gasket deteriorates slowly, and the operator can decide well in advance (by increased fuzziness of the sampling outline) to change the gasket before a total failure results.

2) Visually inspect the gaskets to see if glass fibers from the filter are being left behind, resulting from over-tightening of the faceplate wing nuts and curing the filter along the gasket interface.

3) The operator must check the exposed filter for physical damage that may have occurred during sampling or after sampling. Physical damage to the filter after sampling does not always invalidate the sample as long as all pieces of the filter are included in the folder. However, any loss of sample due to leakages during the sampling period or to loss of loose particulates from the filter after sampling (e.g., loss of particulates when folding the filter) will invalidate the sample.

4) The appearance of the particulates should be checked. Any changes from the normal color, for example, may indicate new emission sources or construction activity in the area. The change should be noted on the high-volume sample coding form, along with any obvious reasons for the change.

Any comments pertinent to the quality of the sample or the general operation of the sampler must be recorded along the margin of the log sheet under "Comments". Information regarding operation of the sampler is also recorded in the appropriate field data log sheet. Reasons for not collecting a sample should be recorded on this form. A record of each sample run is also kept here.

6.1.5 Preventive Maintenance Program

A schedule of preventive maintenance should be maintained for each PM_{10} sampler by the operator.

Sampler Motor--

Motor brushes require replacement about every 3 months or 15 runs. The brushes should also be checked for uneven wear after this period of time. Such wear may be an indication of motor problems and may necessitate replacement of the motor if it is great enough.

To replace motor brushes, remove the threaded top and slide the whole motor out of the motor housing. The brushes are each held in place by two small screws and a bracket. When installing the new brushes, make sure they seat properly against the armature. Some of the brushes are slotted to ensure proper fit. Be sure to replace the old brushes with the same style, as there are several different types in use. After installing new brushes, the motor should be run for about 20 minutes before taking any readings to burn the brushes in. The motor should be run against some resistance, either a Nº 18 calibration plate or a clean filter (not to be used for sampling).

Record all sampler brush changes with date performed and operator's initials in the sampler log sheet and on a label which is to be attached to the sampler motor.

Faceplate Gaskets--

Worn gaskets will eventually result in poor or invalid samples. A properly exposed filter should have a clear, sharp edge between the exposed center and the clean filter border. Any decrease in the sharpness of this interface indicates the need for a new faceplate gasket.

The old gasket(s) can be removed with a knife and the surface properly cleaned. A new gasket is then attached to the appropriate faceplate with rubber cement.

If the faceplate is bent, it should be replaced.

Leaks in Sampling System--

Although leaks in the sampling system are not common, they occasionally can occur at the threaded connections, transducer connection, or the filter holder adapter/cartridge. Leakage which occurs at the bottom of the adapter where it screws onto the motor usually results from poor mating of the threads on the motor and filter adapter. To test, tighten knurled ring onto motor. If the ring is tight and the round gasket is in place, the filter and adapter head will not turn with respect to the motor. If it does, a different motor/filter adapter pairing is necessary.

Miscellaneous Equipment--

All tygon tubing for connecting the pressure tap of the PM_{10} hi-vol motor to the pressure recorder should be checked periodically for proper connections and any cracking or deterioration of any other rubber components. All electrical connections should be checked. Any exposed wires should either be covered with electrical tape or replaced with new cord.

No regular maintenance is required for the seven-day timer, elapsed time indicator, or mass flow controller. If any of these fail to operate properly, they should be replaced.

Some shelters are not anodized as is the case with new ones and will require surface treatment to avoid oxide buildup. Wire brushes, steel wool, and cans of clear spray paint are available for touch up work. WD-40 can be used to lubricate hinges and hasps. Damaged shelters should be returned to central office for repair or salvage.

Sampler Breakdown Troubleshooting--

If the sampler motor fails to operate, a few checks can be made in the field to locate the faulty component.

Start with the power source. Check the lead cord for proper connection at the power outlet and at the female end where it connects with the 7-day timer.

There are three major areas where power can be interrupted: 1) motor; 2) mass flow controller; and 3) timer. Check the mass flow controller by plugging the motor directly into the timer outlet. Manually turn the timer on. If the motor runs, the mass flow controller is faulty and its transducer should be checked for proper placement. If ok, then replace controller. The timer can also be checked by noticing if the ETI is advancing when the manual switch is on; however, the timer should also be checked as described above. If the motor fails to operate despite these checks, the motor is at fault and should be repaired or replaced.

6.2.0 Audits and Precision

Audits--

Proper implementation of an auditing program will serve a two-fold purpose: 1) to screen the data to detect whether the data quality is adequate, and 2) to determine data quality in terms of the precision.

Performance Audits--

Flow checks will be conducted between sample runs for every sampler in use in the study. In addition, flow audits will be conducted at least once during the study to independently determine the status of the samples.

Systems Audit--

The system audit consists of random on-site inspections and review of the quality assurance system used for the total measurement system (sample collection, sample analysis, data processing, etc.). System audits are normally a qualitative appraisal of system quality. A systems audit should be conducted at the beginning of a new monitoring system and as appropriate thereafter to audit significant changes in system operation.

Precision--

Collocated PM_{10} are used to estimate precision. These precision checks will be carried out in accordance with 40 CFR Part 58 as published May 10, 1979 at seven (7) sites of the study.

6.2.1 Hi-Vol Flow Audits Conducted by McLaren/Hart

Frequency--

Each site must be audited at least once during the study; however, for this study, each sampler's flow rate is checked between each scheduled sample run.

Equipment--

The portable audit equipment used is a GMW Model 25 or 28 orifice-manometer calibration kit. The calibration kits are certified by GMW as transfer flow standards against a primary Roots-Connersville rotary dry gas meter. Each calibration kit is supplied with a calibration curve (orifice static pressure [ΔH] vs. air flow rate [SCFM]). Refer to Figure 11 in Appendix for a schematic of the PM_{10} sampler calibration set-up.

Procedure--

1) Remove the existing filter, store in a safe place, and replace with a clean, unweighed filter (of the same type as the existing filter) and secure with adapter plate supplied with calibration kit. Check alignment of faceplate gasket and tighten securely to prevent any leaks.

2) Attach GMW-25 calibrator to adapter plate without any orifice plates (or GMW-28 which does not use plates) and make sure that all rubber gaskets are between all metal to metal contacts. Hand tighten until gaskets are firmly compressed.

3) Attach manometer to support using magnetic holder, where possible, and open both valves used to prevent green manometer fluid from leaking during transport. Attach one line to GMW calibrator port; the other end of manometer is open to atmosphere. Adjust scale on manometer for zero reading. (The fluid in the manometer is distilled water with fluorescein dye with a specific gravity of 1.00 and a freezing point of 32°F. No other fluid may be substituted, use only the fluid supplied with the audit device.)

4) With the audit device and the clean PM_{10} filter in place, operate the PM_{10} sampler in its normal manner. Allow motor to run for at least five minutes before taking the first reading. Record the audit device manometer readings (left and right) and corresponding hi-vol pressure recorder readings on the data sheet in the proper calibration spaces. Look up standard air flow rate(s) from supplied calibration curve based on audit device manometer reading and record on form. Also record the corresponding indicated air flow rate on the pressure recorder and calculate the percent difference of two readings as follows:

$$\frac{QInd - Qact}{Qact} \times 100\%$$

If greater than ± 10% for any one flow check, readjust the setpoint of the mass flow controller to 40 SCFM.

5) Remove and stow the GMW-25/28 calibration kit. Install the clean, weighed glass fiber filter and prepare timer for the next sample run. Note ETI reading at this time so that the ETI start reading can be adjusted accordingly for the next sample.

6.2.2 Parallel (co-located samplers) Measurements for Precision

At selected sites in the monitoring study (7 samplers), a second PM_{10} sampler will be operated. The two duplicate samplers will be located at the same elevation (≈ 2 meters) and between 2 and 4 meters apart. One sampler at each location is designated beforehand as the official sampler; the identity of each sampler must be maintained. Calibration, sampling and analysis must be the same for both samplers. The differences in concentration between the official and duplicate samplers are used to calculate precision as shown below:

Xi = Concentration of official sampler (ug/m^3)

Yi = Concentration of duplicate sampler (ug/m^3)

$di = \frac{(Yi - Xi)\,100}{Xi}$ = percent difference

$dj = \Sigma\, di/n$ = average percent difference for the jth PM_{10} pair

$Sj = \frac{\Sigma\, di^2 - (\Sigma\, di)^2/n}{n - 1}\ ½$ = standard deviation for the jth PM_{10} pair

The 95 percent probability limits for the jth PM_{10} pair are calculated from:

Upper 95% probability limit = $dj + 1.96\ Sj/\sqrt{2}$

Lower 95% probability limit = $dj - 1.96\ Sj/\sqrt{2}$

Precision for PM_{10} for this study is calculated as follows (assumes different numbers of paired measurements are made at collocated sites):

$D = \frac{\Sigma\, nidi}{\Sigma(ni - 1)}$ = average %

$S_a = \frac{\Sigma(ni - 1)S^2}{\Sigma(ni - 1)}\ ½$ = pooled standard deviation

Upper 95 Percent Probability Limit = $D + 1.96\ Sa/\sqrt{2}$

Lower 95 Percent Probability Limit = $D - 1.96\ Sa/\sqrt{2}$

At low concentrations agreement between the measurements of collocated samplers, expressed at 95% probability limits, may be poor. Therefore a tally is kept for each sample measuring less than 20 ug/m^3.

The four individual variables that can be checked to determine the performance of the PM_{10} sampling system are as follows:

1) PUF plug "cleanliness"
2) Flow rate calibration
3) Exposed filter and PUF/XAD-2 analyses
4) Data processing

The use of collocated samplers is a convenient method to check the resultant of these individual variables. Out of control values imply errors in one or more of the samples collection and analysis steps. The precision check program is designed to cover combinations of sample collection, weighing, and data processing and will document the overall performance of independent actions involved.

When possible, sites with the highest concentrations are to be selected for this program, and operated in accordance with routine procedures. The result of both the official and duplicate PM_{10} sampling will be reported. The precision limits determined from the collocated samplers will be used to validate data for PM_{10} in the study.

Proper siting and exposure is essential. The two PM_{10} samplers should be adjacent but no closer than 6 feet (2 meters) to avoid cross recirculation. The two PM_{10} samplers should also be no greater than 4 meters apart to satisfy USEPA's siting requirements for duplicate PM_{10} sampling. Two complete systems should be used including separate timers. Operation should be in strict accordance with the routine procedures given in this section.

Collocated PM_{10}'s will be identified on their respective PM_{10} log sheet. All collocated PM_{10} samplers will be distinctively marked as such on the outside front portion of the shelter roof.

6.3.0 Primary Calibration Procedures

Preliminary calibrations are required of all sampling equipment and sub-components such as elapsed time indicators, etc. in order to establish the accuracy level of the equipment used. The following procedures are used to check such accuracy and to be used as part of the overall Quality Assurance Program.

Elapsed Time Indicator--

Elapsed Time Indicators (ETI) should be checked for accuracy against a timepiece of know accuracy prior to being placed in service.

Allow the ETI and the timepiece to run simultaneously for a 24-hour period. An error of more than two minutes warrants an adjustment or replacement of the indicator.

Record results of these checks in the time calibration log sheet, Form TCAL-1, found in Appendix A.

Seven-Day Timer--

Every timer, prior to field use, should be checked for accuracy using the calibration procedure outlined below.

The following steps outline the calibration procedure:

1) Plug the timer into a standard 110-volt power source. Several timers may be plugged into a common source.
2) Adjust the dial (turn clockwise only) to read the correct current time and day.
3) Set the trippers of a 24-hour test period. Try to make this setting at least two hours before the actual start time.

4) Plug a test light into a female outlet of the timer and manually check for power with the ON-OFF switch.

5) Record the initial ETI reading.

6) Allow the system to operate for the 24-hour test period and determine the total elapsed time by subtracting the initial ETI reading from the final reading.

If the total elapsed time is within the ± 15 minutes for a 24-hour period, the timer is acceptable for field use.

If the total elapsed time is not within these limits, reset the trippers and repeat the test.

Sampler--

Each PM_{10} sampler must be calibrated prior to the commencement of the study.

A GMW Model 25 or 28 orifice-manometer calibration kit, which has been certified by GMW as a transfer flow standard against a primary Roots-Connersville rotary dry gas meter, is supplied with a calibration curve (orifice static pressure [ΔH] vs. standard* air flow rate [SCFM]) for use in calibrating the PM_{10} sampler. USEPA requirements specify that the PM_{10} must be calibrated at actual conditions (temperature and pressure) to 1.13 m^3/min (40 CFM). The following calibration procedure will greatly simplify the steps needed to calibrate the PM_{10} sampler using a mass flow controller.

Procedure--

1) Remove the existing filter, store in a safe place, and calibrate without any filter as specified in the USEPA PM10 methodology. Secure the adapter plate supplied with calibration kit to the PM_{10} filter holder housing. Check alignment of face plate gasket and tighten securely to prevent any leaks.

**Standard Conditions of 25°C (298°K) and 29.92" Hg (760mm Hg)*

2) Attach the GMW-25 or 28 calibrator to the adapter plate without any orifice plates (or GMW-28 which does not use plates) and make sure that all rubber gaskets are between all metal to metal contacts. Hand tighten until gaskets are firmly compressed.

3) Attach manometer to support using magnetic holder, where possible, and open both valves used to prevent green manometer fluid from leaking during transport. Attach one line to GMW calibrator port; the other end of manometer is open to atmosphere. Adjust scale on manometer for zero reading. (The fluid in the manometer is distilled water with fluorescein dye with a specific gravity of 1.00 and a freezing point of 32°F. No other fluid may be substituted, use only the fluid supplied with the audit device.)

4) With the GMW flow calibration device in place, operate the PM_{10} sampler in its normal manner. Allow motor to run for at least five minutes before taking the first reading. Record the flow calibration device's manometer readings (left and right) and corresponding Dickson pressure transducer recorder readings on the data sheet in the proper calibration spaces. Look up <u>standard</u> air flow rate(s) (SCFM) from supplied GMW calibration curve corresponding to the flow calibration device manometer reading and record this flow on form. Also record the corresponding indicated air flow rate found on the Dickson pressure recorder and calculate the percent difference of the two readings as follows:

$$\frac{QInd - Qact}{Qact} \times 100\%$$

Adjust the setpoint of the mass flow controller to give a manometer reading which corresponds to 40 SCFM on the flow calibration device*. Also adjust the Dickson pressure recorder until 40 SCFM is indicated. Record all pertinent information on the supplied calibration forms.

5) Remove and stow the GMW-25/28 calibration kit. Install a clean, weighed glass fiber filter and prepare time for the scheduled sample run. Note ETI reading at this time so that the ETI start reading can be adjusted accordingly for the next sample.

* *It is assumed that: 1) the PM_{10} samplers have been calibrated at or near standard conditions before field use; and 2) the mass flow controller will maintain the 40 SCFM set point regardless of ambient temperature and pressure conditions. When audits are performed using a GMW of* $\sqrt{\frac{Tamb}{Tstd} \times \frac{Pstd}{Pamb}}$ *flow calibration device (flow rates at standard conditions), an error for the orifice will be incurred with the magnitude dependent upon the temperature and/or pressure values. In most cases, the error will not exceed 3% with an ambient temperature of 10° (283°K) assuming the same atmospheric pressure. For this study, the ambient temperatures will not exceed this limit.*

6.3.1 PM_{10} Sampler Calibration Protocol

PM_{10} sampler flowrates, as with the TSP sampler, are calibrated using a certified flow calibration device (GMW25 or 28) which has been calibrated against a Roots-Connersville Positive Rotary Dry Gas Meter. The Roots-Connersville is considered a primary field standard. The Roots-Connersville gas meter is certified against the NBS standard by the manufacturer supplying the certified air flow calibration device. The certification of the flow calibration device is good for one (1) year as a transfer standard at which time the device must be recalibrated against a primary standard.

6.3.2 PM_{10} Flow Audit Device Certification

Equipment: The audit device is a GMW25 or 28 calibration kit equipped with a GMW35 top loading adapter. Certification of the audit device requires an FH2100 filter holder and a primary standard Roots-Connersville positive rotary dry gas meter.

Frequency: The GWM25/28 calibration kit must be recertified every twelve (12) months by either the manufacturer or by another certified source. Recertification procedure is as follows:

1) Assemble the equipment as follows:

   a) Attach the FH2100 filter holder with round rubber gasket directly to the Roots-Connersville Meter. Firmly compress gasket by hand tightening.

   b) Secure the GMW35 adapter to the filter holder with a new face place gasket and with one clean filter in place. Insure that the filter is the current type authorized for use. Check alignment of the gasket and tighten securely to prevent leaks.

   c) Attach the GMW25 or 28 calibrator to the adapter with a round rubber gasket but without any orifice plates. Hand tighten firmly to prevent leakage.

   d) Attach one leg of manometer to the nipple of the calibrator with the other leg fully open to atmosphere.

2) Perform the calibration of the audit device by the following procedure outlined below using a <u>single filter and varying the orifices</u> in the audit device as follows:

- 1st run -- no orifice plate
- 2nd run -- 18 hole orifice plate installed if using the GMW-28 / Fully Open Position (Nº 1) if using the GMW-28
- 3rd run -- 13 hole orifice plate installed / Position Nº 2
- 4th run -- 10 hole orifice plate installed / Position Nº 3
- 5th run -- 7 hole orifice plate installed / Position Nº 4

The orifice/manometer flow calibration device is calibrated by:

a) Passing one-hundred cubic feet through the orifice.

b) Recording the time for this quantity of air to pass through the orifice.

c) Measuring the difference between existing atmospheric pressure and the pressure at the inlet of the gas meter. This provides a means to convert the volume of the air passing through the meter to the corresponding volume at existing atmospheric pressure.

d) Calibration curve data is generated by running the system and varying the orifice plates* in place. Four calibration points are obtained by running the hi-vol with each of several orifice plates*.

e) Calibration curve is obtained by plotting flow rate versus orifice/manometer reading on log-log paper. The resultant curve is described by the equation $Q = a(\Delta H)^b$, where "a" is the intercept and "b" is the slope of the log-log curve.

**Assuming GMW-25 is used.*

3) The specific calibration steps are as follows:

a) Attach flow calibration device to the primary standard.

b) Zero the water manometers by sliding their scales until the zero on the scale is level with the bottom of the meniscus.

c) Run PM_{10} hi-vol motor for a warm-up period of five minutes.

d) Secure filter holder on top of adapter with no (zero) filters in place.

e) Record temperature and barometric pressure on the calibration form given below.

f) Record the pressure drop across the orifice and the pressure drop at the inlet of the gas meter as shown on the two manometers.

g) Start the timer and let it run until 100 cubic feet of air, as indicated by the gas meter, have passed through the orifice. Record the elapsed time.

h) Remove filter holder from adapter and place on filter squarely over screen. Secure holder to adapter over filter, taking care that there are no gaps at the edges between the holder gasket and filter.

i) Repeat steps g and h.

j) Insert the first orifice plate and then repeat steps g and h.

k) Insert the second orifice plate and then repeat steps g and h.

l) Repeat steps g and h for each of the remaining orifice plates.

NOTE: When inserting orifice plates, make sure that the round rubber gaskets are installed and are firmly compressed.

4) Calculations Description:

The series of calculations listed below are required to correct the flow to standard temperature and pressure conditions and to correct for any error, if applicable, in the Roots-Connersville meter based on prior calibration of the Roots-Connersville meter. Flow rate correct to STP (25.0° C and 29.92" Hg) (298°K and 760 mm Hg) versus orifice pressure drop are then plotted on log-log paper to obtain a straight line. Specific steps are:

a) Obtain observed flow rate by dividing 100 (cubic feet of air passing through orifice) by the elapsed time.

b) Convert the gauge pressure (partial vacuum) at the inlet of the gas meter from inches of water vacuum to inches of mercury vacuum by dividing inches of water by 13.6 (specific gravity of mercury).

c) Obtain the absolute pressure at the inlet of the gas meter by subtracting the gauge pressure at the inlet of the gas meter from the atmospheric pressure, both in inches of mercury.

d) Correct, because of error in the gas meter, where applicable, observed flow rate to corrected meter flow rate by reference to a corrected meter flow rate table (corrected flow rate table is based upon a prior calibration of the Roots-Connersville meter).

e) Obtain the room condition flow rate by multiplying the corrected meter flow rate by the ratio of the absolute pressure at the meter inlet to atmospheric pressure.

f) Correct the room condition flow rate to STP conditions flow rate by multiplying room condition flow rate by a correction factor. The correction factor is equal to:

$$\left(\frac{273.15°K + 25.0°C}{273.15°K + \text{Room Temp.}°C} \times \frac{\text{Atmospheric Pressure in inches Hg}}{29.92 \text{ inches Hg}}\right)^{1/2}$$

g) Obtain a calibration curve by plotting STP flow rate versus pressure drop across the orifice on log-log paper, resulting in a straight line described by the equation:

$Q = a(\Delta H)^b$

where,

Q = air flow rate, cubic feet per minute

ΔH = pressure drop across the orifice, inches of water

a = intercept (value of Q when ΔH equals one)

b = slope = $(\log Q - \log a)/\log \Delta H$

5) At the completion of the certification procedure attach the calculated slope and intercept values to the calibration kit with the date of the calibration certification.

6) When returning the audit device to the field insure that a sufficient quantity (12 or more) of currently authorized PM_{10} filters have been provided with the calibration kit for field use.

6.4.0 Processing PM_{10} Data

PM_{10} filters have been purchased by the subcontracting laboratory and supplied to the study after identification, desiccation, and tare weighing.

The weighed filters are then used and returned to the laboratory for desiccation, re-weighing and analysis for inhalable particulates (PM_{10}). All information on tare weights of these filters are kept by the laboratory. All other sampling information is kept on field sampling log sheets of which a copy is supplied to the laboratory for its information.

The laboratory completes its analyses, complete its records on each exposed filter including all analytical results and forwards this information to McLaren/Hart, Albany for review and comment where necessary. These data are validated by McLaren/Hart and then submitted as final results.

VOLATILE ORGANIC COMPOUNDS (VOC's)

VII. VOLATILE ORGANIC COMPOUNDS (VOC's)

Section		Revision	Date
7.0.0	VOC Sampler Quality Assurance	0	09/01/91
7.1.0	System Description	0	09/01/91
	7.1.1 Operation	0	09/01/91
	7.1.2 Installation of Canister	0	09/01/91
	7.1.3 Operational Checks	0	09/01/91
	7.1.4 Sample Handling	0	09/01/91
7.2.0	Audits and Precision	0	09/01/91
	7.2.1 VOC Sampler Flow Audits	0	09/01/91
	7.2.2 Precision (Co-Located Samplers)	0	09/01/91
7.3.0	Primary Calibration Procedures	0	09/01/91
7.4.0	Processing VOC Data	0	09/01/91

7.0.0 VOC Canister Sampler Quality Assurance

In order to provide ambient volatile organic compound (VOC) measurements of the maximum attainable quality, the quality assurance program described in this section has been developed. It will be implemented at all sites in the McLaren/Hart ambient air monitoring study at the Portsmouth Naval Shipyard in Kittery, Maine.

The quality assurance program for VOC monitoring is designed to maintain a maximum level of data quality. This is accomplished by a series of flow rate audits, collocated samplers, and operation and laboratory checks.

The operation aspect of the program is designed to assure that the VOC canister sampler is operated in a manner that produces the most accurate data.

A Primary Calibration of the VOC canister sampler is initially performed by McLaren/Hart personnel prior to the commencement of the study. Recalibration is also performed at any time the VOC sampler is repaired or a flow audit of that sampler falls outside of the control limits and the cause cannot be determined and repaired in the field.

Audits will be the primary checks on the performance of the VOC canister sampler. Flow audits will be conducted at least once during the study for each sampler by operations personnel. These audits are intended to flag those canister samplers in need of repair or recalibration.

The goal of the VOC Canister Sampler Quality Assurance Program is to produce data which meet or exceed the following objectives:

1) Accuracy - accuracy is determined from the percent differences of flow audits as a 95% confidence limit as defined in the Federal 40 CFR Part 58. The accuracy should be ± 10% or better.

2) Precision - precision will be determined from the percent difference of reported concentrations of select compounds between two collocated samplers as defined in the Federal 40 CFR Part 58.

3) Completeness - at least eleven (11) valid 24-hour samples are required for the study at each study site.

A further discussion of Quality Assurance Procedures may be found in the USEPA *Quality Assurance Handbook for Air Pollution Measurement Systems*, Volume II, *Ambient Air Specific Methods*, EPA-600/4-77-027a which was used as a guideline for this section.

7.1.0 System Description

A Nutech Model 4000 canister sampler will collect ambient air samples at a constant air flow rate for a period of 24 hours into a Summa-Passivated stainless steel 6-liter canister.

The volatile organic compounds (VOC's) subsequently collected are then analyzed by the subcontracting laboratory. A list of the VOC's measured can be found in Appendix B (Table II).

The VOC sampling network at the Portsmouth Naval Shipyard utilizes the recommended USEPA TO-14 method for collecting and analyzing ambient VOC's. Each Nutech canister sampler and canister are also certified "clean" by the manufacturer/supplier as per USEPA procedures for TO-14 certification. Refer to the certification letter, dated October 19, 1991, from Research Triangle Laboratories which can be found in Appendix C.

7.1.1 Operation

Proper operation and maintenance of any instrument is essential to produce results which are reliable and meaningful. The accuracy and/or validity of data obtained from this method depends upon equipment performance and the proficiency with which the operator performs his various tasks. Deviations from the recommended operational procedure may result in the collection of invalid data or reduce the quality of the data. A site log book maintained by the operator should include most recent calibration/audit data and any schedule(s) for future maintenance and calibrations. Initial and final flows for each sampling period are also recorded. This section describes the normal operation and maintenance procedures for the VOC canister sampler.

A whole air sample is drawn into the system through a stainless steel inlet tube by a diaphragm pump and directed into a pressure manifold. The pressure in the manifold is regulated by an adjustable relief valve which is set at 25 psig. This serves as the fixed upstream reference for the variable-constant differential flow controller. An initially evacuated canister is filled by action of the flow-controlled pump, at a rate of 10 cc/min., from near atmospheric vacuum to a positive pressure to not exceed 25 psig. The air sample flows through the flow controller (which maintains constant flow rates even with changes in the downstream pressure) and into the canister at a rate of 10 cc/min. A digital timer programmer is used to preselect sample duration and start and stop times. The canister is filled for a 24-hour period. The timer is then programmed for a 24-hour sample run with 12:00 AM (midnight) start time and a 12:00 AM (midnight) stop time. Chromatographic analysis is used to identify chlorinated organics and organic compounds. Refer to Figure 7 in Appendix B for a flow schematic of this sampler.

The appropriate log sheets are used by field operators for recording canister (VOC) data. Preliminary field checks for duration of the sample run and air flow rates are also made before the data are validated. Sample run times must be 24 ± 1 hr. (1380 to 1500 mins) and initial and final air flow rates should be maintained to within 10 SCCM ± 1 SCCM (± 10%).

7.1.2 Installation of Canister

Before each scheduled sampling event, the NuTech VOC canister sampler is leak tested, flow-checked, and adjusted to the proper air flow rate and pressure if necessary. A certified* clean 6-liter summa-passivated stainless steel canister is then attached to the outlet port of the unit. The programmable digital timer is then set for the sample start and stop times.

The NuTech canister sampler utilizes a shut-off magnelatch valve, controlled by the electronic timer to direct the sample flow to the canister.

All fittings and tubings are stainless steel and the entire system has been purged with ultra-pure zero air prior to use.

After installation of the canister, the main power is switched on and then the canister valve is opened. Finally, the valve/solenoid of the sampler is switched on to allow the canister to begin filling up at the preadjusted flow rate of 10 cc/min. A red light on the sampler will indicate that the canister is filling.

**See certification letter from Research Triangle Labs in Appendix C.*

7.1.3 Operational Checks

Initial Flow-Rate Measurements of the Sampler--

Make flow-rate measurement before the sampler is connected to the canister.

Read the flow rate using a measuring device such as a bubble-type meter (Gilian Gilibrator is used for this study). The reading should be 10 sccm at 25 psig.

If the flow rate reading is 10 sccm, readjust the flow controller until the flow meter indicates 10 sccm.

Final Flow Rate Measurements of the Sampler--

The same procedure is used for final flow-rate measurements after completion of the 24-hour sampling period. Record all information on the supplied forms.

Time Measurements--

Start and stop times should be 12:00 midnight to 12:00 midnight for a 24-hour sampling period. Note the times on the log sheet provided for this sampler. An elapsed time indicator (ETI) is used to indicate the total number of minutes each sample ran. Under "Elapsed Time Indicator - Start" record the ETI reading before the run date. At each canister change, the digital elapsed time indicator reading should be recorded on the appropriate form. The elapsed time indicator is quartz-controlled and should operate accurately. Check the time at each visit to verify that the time is accurate. The timer is battery backed-up in case of a power outage.

Samples for sampling periods less than 23 hours or greater than 25 hours should be noted and sent to the laboratory with such information clearly stated. Such samples may be invalidated depending upon the length of the exposure period.

7.1.4 Sample Handling

Removing Canister--

When sampling is complete, shut off the canister valve and remove the canister from the sampler. Record all necessary information on the appropriate form. Turn off the flow by pushing the manual override or timer to off. Turn off main power to shut off pump and other electronics. Install caps in the sampler inlet, outlet, and exhaust ports until next scheduled sampling run.

NOTE: To ensure that the system works properly, first turn on the main power, then the valve switch manually listening for the clicking of the valve.

Routine Checks--

The following listed checks should be made when removing the canister:

1) Check the canister for proper pressure of at least 20 psig.

2) Check the elapsed time indicator for a total sampling time of 1440 minutes ± 60 minutes.

3) Check the air flow rate to make sure flow rate is 10 sccm (± 5%).

4) The operator must check the entire sampling system for physical damage that may have occurred during sampling or after sampling.

7.2.0 Audits and Precision

Audits--

Proper implementation of an auditing program will serve a two-fold purpose: 1) to screen the data to detect whether the data quality is adequate; and 2) to determine data quality in terms of the precision.

Performance Audits--

Flow checks will be conducted between sample runs for every sampler in use in the study. In addition, flow audits will be conducted at least once during the study to independently determine the status of the samples.

Systems Audit--

The system audit consists of random on-site inspections and review of the quality assurance system used for the total measurement system (sample collection, sample analysis, data processing, etc.). System audits are normally a qualitative appraisal of system quality. A systems audit should be conducted at the beginning of a new monitoring system and as appropriate thereafter to audit significant changes in system operation.

Precision--

Collocated canister samplers are used to estimate precision. These precision checks will be carried out in accordance with 40 CFR Part 58 as published May 10, 1979 at seven (7) sites of the study.

7.2.1 Canister Flow Audits Conducted by McLaren/Hart

Frequency--

Each site must be audited at least once during the study.

Equipment--

A portable bubble meter is used to check the calibration status of the canister sampler's flow rate. The bubble meter is a primary flow standard.

Procedure--

1) Remove the canister after closing its valve.
2) Attach the bubble meter inlet to the outlet of the sampler leading to the canister.
3) Run three flow readings and take an average. If the average indicates an air flow rate of greater than 10.5 sccm or less than 9.5 sccm, readjust the flow controller and/or pressure back to 10 sccm and/or 25 psig, respectively.
4) Re-run the three flows again after readjustment and record all information.

7.2.2 Parallel (co-located samplers) Measurements for Precision

At selected sites in the monitoring study (7 samplers), a second canister sampler will be operated. The two duplicate samplers will be located at the same elevation (~ 2 meters) and between 2 and 4 meters apart. One sampler at each location is designated beforehand as the official sampler; the identity of each sampler must be maintained. Calibration, sampling and analysis must be the same for both samplers. The differences in concentrations between the official and duplicate samplers are used to calculate precision as shown below:

Xi = Concentration of each selected compound of each official sampler (ug/m^3)

Yi = Concentration of each selected compound of each duplicate sampler (ug/m^3)

$di = \frac{(Yi - Xi)\,100}{Xi}$ = percent difference

$dj = \Sigma di/n$ = average percent difference for the jth pair

$Sj = \frac{\Sigma di^2 - (\Sigma di)^2/n}{n - 1}\ ½$ = standard deviation for the jth pair

The 95 percent probability limits for the jth pair are calculated from:

Upper 95% probability limit = $dj + 1.96\ Sj/\sqrt{2}$

Lower 95% probability limit = $dj - 1.96\ Sj/\sqrt{2}$

Precision for VOC's for this study is calculated as follows (assumes different numbers of paired measurements are made at collocated sites):

$D = \frac{\Sigma nidi}{\Sigma(ni - 1)}$ = average %

$S_a = \frac{\Sigma(ni - 1)S^2}{\Sigma(ni - 1)}\ ½$ = pooled standard deviation

Upper 95 Percent Probability Limit = $D + 1.96\ Sa/\sqrt{2}$

Lower 95 Percent Probability Limit = $D - 1.96\ Sa/\sqrt{2}$

At low concentrations agreement between the measurements of collocated samplers, expressed at 95% probability limits, may be poor. Therefore a tally is kept for each sample measuring less than 20 ng/m^3.

The four individual variables that can be checked to determine the performance of the VOC sampling system are as follows:

1) Cleaning certification of the canister and sampling system before exposure
2) Flow rate calibration
3) Analysis of exposed canister
4) Data processing

The use of collocated samplers is a convenient method to check the resultant of these individual variables. Out of control values imply errors in one or more of the samples collection and analysis steps. The precision check program is designed to cover combinations of sample collection, weighing, and data processing and will document the overall performance of independent actions involved.

When possible, sites with the highest concentrations are to be selected for this program, and operated in accordance with routine procedures. The result of both the official and duplicate hi-vols sampling will be reported. The precision limits determined from the collocated samplers will be used to validate data for VOC monitoring in the study.

Proper siting and exposure is essential. The two canister samplers should be adjacent but no closer than 6 feet (2 meters) to avoid cross recirculation and no more than 4 meters apart as per USEPA requirements. Operation should be in strict accordance with the routine procedures given in this section.

Collocated hi-vols samplers will be identified on their respective VOC log sheet. All collocated canister samplers will be distinctively marked as such on the outside front portion of the housings.

7.3.0 Primary Calibration Procedures

Preliminary calibrations are required of all sampling equipment and sub-components such as elapsed time indicators, etc. in order to establish the accuracy level of the equipment used. The following procedures are used to check such accuracy and to be used as part of the overall Quality Assurance Program.

Elapsed Time Indicator--

Elapsed Time Indicators (ETI) should be checked for accuracy against a timepiece of know accuracy prior to being placed in service.

Allow the ETI and the timepiece to run simultaneously for a 24-hour period. An error of more than two minutes warrants an adjustment or replacement of the indicator.

Record results of these checks in the time calibration log sheet, Form TCAL-1, found in Appendix A.

Canister Sampler--

Each canister sampler must be calibrated prior to the commencement of the study. A bubble meter type flow measuring device is used to calibrate the air flow rate.

Procedure--

1) Remove the canister after closing its valve fully.
2) Attach the bubble meter calibrator to the outlet leading to the canister.
3) Run three flow readings and take an average. If the average indicates the air flow rate is greater than 10.5 sccm or less than 9.5 sccm, adjust the pressure reading to 25 psig and/or the flow control valve until a flow rate of 10 sccm is indicated by the bubble meter.
4) Record all information on the supplied canister sampler calibration form.

7.4.0 Processing VOC Data

Canisters have been purchased by the subcontracting laboratory and supplied to the study after proper cleaning and certification as well as evacuation to approximately 30" Hg vacuum.

The canisters are then used and returned to the laboratory for analysis for volatile organic compounds. All information on these filters are kept by the laboratory. All other sampling information is kept on field sampling log sheets of which a copy is supplied to the laboratory for its information.

The laboratory completes its analyses, complete its records on each canister including all analytical results and forwards this information to McLaren/Hart, Albany for review and comment where necessary. These data are validated by McLaren/Hart and then submitted as final results.

SEMI-VOLATILE ORGANIC COMPOUNDS (SVOC's)

PUF CARTRIDGE SAMPLER

VIII. SEMI-VOLATILE ORGANIC COMPOUNDS (SVOC's)

PUF CARTRIDGE SAMPLER

Section		Revision	Date
8.0.0	SVOC (PUF) Sampler Quality Assurance	0	09/01/91
8.1.0	System Description	0	09/01/91
	8.1.1 Operation	0	09/01/91
	8.1.2 Installation of Particulate Filter and PUF Cartridge	0	09/01/91
	8.1.3 Operational Checks	0	09/01/91
	8.1.4 Sample Handling	0	09/01/91
	8.1.5 Preventative Maintenance Program	0	09/01/91
8.2.0	Audits and Precision	0	09/01/91
	8.2.1 SVOC Sampler Flow Audits	0	09/01/91
	8.2.2 Precision (Co-Located Samplers)	0	09/01/91
8.3.0	Primary Calibrations	0	09/01/91
	8.3.1 SVOC Sampler Calibration Protocol	0	09/01/91
	8.3.2 SVOC Sampler Flow Audit Device Certification	0	09/01/91
8.4.0	Processing SVOC Data	0	09/01/91

8.0.0 SVOC (PUF) Sampler Quality Assurance

In order to provide ambient semi-volatile organic compound (SVOC) measurements of the maximum attainable quality, the quality assurance program described in this section has been developed. It will be implemented at all sites in the McLaren/Hart ambient air monitoring study at the Portsmouth Naval Shipyard in Kittery, Maine.

The quality assurance program for SVOC (PUF) sampling is designed to maintain a maximum level of data quality. This is accomplished by a series of flow rate audits, collocated samplers, and operation and laboratory checks.

The operation aspect of the program is designed to assure that the PUF sampler is operated in a manner that produces the most accurate data.

A Primary Calibration of the PUF sampler is initially performed by McLaren/Hart personnel prior to the commencement of the study. The PUF sampler's calibration status is periodically audited during the study. Such audits will be the primary checks on the performance of the PUF sampler. These flow audits will be conducted on each sampler by operations personnel. These audits are intended to flag those samplers in need of repair or recalibration.

The goal of the SVOC (PUF) Sampler Quality Assurance Program is to produce data which meet or exceed the following objectives:

1) Accuracy - accuracy is determined from the percent differences of flow audits as a 95% confidence limit as defined in the Federal 40 CFR Part 58. The accuracy should be ± 10% or better.

2) Precision - precision will be determined from the percent difference of reported concentrations of select compounds between two collocated samplers as defined in the Federal 40 CFR Part 58.

3) Completeness - at least eleven (11) valid 24-hour samples are required for the study at each study site.

A further discussion of these objectives may be found in the USEPA *Quality Assurance Handbook for Air Pollution Measurement Systems*, Volume II, *Ambient Air Specific Methods*, EPA-600/4-77-027a which was used as a guideline for this section.

8.1.0 System Description

The PUF sampling network at the Portsmouth Naval Shipyard utilizes a recommended USEPA PUF sampling system manufactured by General Metal Works (GMW) (Model PS-1).

A 24-hour sample of air is passed through a 102 mm circular quartz and then through a 3-inch diameter polyurethane foam (PUF) cartridge to collect both suspended airborne particulates as well as semi-volatile organic vapors.

The PUF sampler is an apparatus for drawing in approximately 7 to 10 SCFM. The sampler utilizes a by-pass blower motor equipped with an independent cooling fan. This design allows the motor to operate at a lower sampling flow rate for periods of long duration without the motor failing due to overheating.

The sampler uses a dual chamber aluminum sampling module which contains both filtering systems. The upper chamber supports the particulate filter media in a circular filter holder; the lower chamber encapsulates a glass cartridge which contains the PUF media. During the sampling operation, the sampler is supported in a protective housing so that the surface of the filter is in a horizontal position. The sampler is equipped with a magnehelic gauge and flow venturi to control and measure the air flow rate. A seven-day clock switch is used to start and stop the sampler operations.

Additionally, the PUF sampler utilizes an elapsed time indicator (ETI) which shows the total sampler "on" time during the sampling period. The ETI reading is used to determine the total ambient air flow through the filter and PUF cartridge.

8.1.1 Operation

Proper operation and maintenance of any instrument is essential to produce results which are reliable and meaningful. The accuracy and/or validity of data obtained from this method depends upon equipment performance and the proficiency with which the operator performs his various tasks. Deviations from the recommended operational procedure may result in the collection of invalid data or reduce the quality of the data. A site log book maintained by the operator should include most recent calibration/audit data and any schedule(s) for future maintenance and calibrations. Initial and final flows for each sampling period are also recorded. This section describes the normal operation and maintenance procedures for the PUF (SVOC) air sampler.

The appropriate logsheets found in Appendix A are used by field operators for recording semi-volatile organics (SVOC) monitoring data. Preliminary field checks for duration of the sample run and air flow rates are also made before the data are validated. Sample run times must be 24 ± 1 hr. (1380 to 1500 mins) and initial and final air flow rates should be maintained to the appropriate flow rate range (7-10 SCFM) in this case.

8.1.2 Installation of Particulate Filter and PUF/XAD-2 Cartridge

A clean particulate filter is carefully removed from its protective envelope using tweezers and placed by the operator using gloves onto the 4-inch filter holder screen, handling it as little as possible. (The filter must be placed onto the screen/plate with the numbered-side down if such identification is used.) The filter is sealed onto the screen using two circular Teflon gaskets, one on each side of the filter. Upon proper placement of these gaskets and the filter, the upper plate is placed over the filter and screen, aligned properly, then the thumb screws are tightened.

The PUF/XAD-2 cartridge insert (with glass container) is then inserted after the filter holder module is unscrewed from the PUF cartridge assembly and any exposed PUF/XAD-2 cartridge in its glass container is removed. After installation of these items, the assembly is screwed onto the filter holder module and the dual sampling module is then mounted in its connector (refer to Figures 8 and 9 in Appendix B for schematics of the sampler and its sampling head).

After the final flow rate reading and elapsed time indicator (ETI) readings are taken for the previous run, the exposed filter is removed from the filter holder by loosening the three thumb screws and removing the upper plate of the filter holder. The PUF cartridge (PUF/XAD-2 insert and glass tube) are also removed. A new PUF/XAD-2 cartridge is then installed. Next, a new unexposed filter is placed on the filter holder and the three ring and swing bolts are tightened until they are snug. Do not over-tighten. Excessive tightening may cause the filter to stick to the gaskets. The two Teflon gaskets will form an airtight seal on the outer edges of both sides of the filter. Also, make sure that the two silicone gaskets at each end of the glass tube are intact. If any of these gaskets are worn or appear defective, replace them.

8.1.3 Operational Checks

Initial Flow-Rate Measurements of the Sampler--

Make flow-rate measurement while the sampler is at normal operating temperature. This requires a warmup time of at least five minutes before a valid measurement can be obtained.

After a warmup period, read the magnehelic gauge and record this reading on the appropriate form. The magnehelic reading should be greater than 30 with a new filter and PUF cartridge installed. The initial calibration was set with the variation adjusted to give a magnehelic reading of 70 with no filter and PUF insert installed and the flow venturi valve fully open.

If the initial magnehelic reading is much lower than 30 with a new filter and PUF insert in place, the system should be checked to see if 1) the venturi valve is not fully open; 2) the variator has been readjusted; 3) the motor needs maintenance or replacement; or 4) leaks are present in the sampling module or another part of the sampling system. If the system must be repaired or any part replaced, a primary calibration must then be performed before the sampler can be returned to service.

Final Flow Rate Measurements of the Sampler--

The same procedure is used for final flow-rate measurements after the completion of the 24-hour sampling procedure. Record the final megnehelic reading, record this value, average the initial and final readings, and then determine the average air flow rate through the sample media from the calibration curve.

Refer to the appropriate forms in Appendix A for this sampling methodology.

Time Measurements--

Start and stop times should be 12:00 midnight to 12:00 midnight for a 24-hour sampling period. Note the times on the log sheet provided for this sampler. At each filter change, the trippers of the 7-day time should be adjusted for the next sampling period. Current time, as indicated on the timer dial, should be checked for accuracy after every run. To adjust to current time, turn the time dial clockwise only.

An elapsed time indicator (ETI) is used to indicate the total number of minutes each sample ran. Under "Elapsed Time Indicator - Start" record the ETI reading before the run date. After the run date, record the "ETI - Stop". The month and day on which the sample was run should also be recorded in the appropriate spaces on the TSP data log sheet.

Samples for sampling periods less than 23 hours or greater than 25 hours should be noted and sent to the laboratory with such information clearly stated. Such samples may be invalidated depending upon the length of the exposure period.

8.1.4 Sample Handling

Removing Exposed Filter--

Place the sampler in the servicing position (top hinged up). Remove the upper plate of the filter holder assembly and remove the exposed particulate filter from the supporting screen by sliding a manila tag card under an edge and lifting. With the exposed side up, insert the entire exposed filter side into one of the protective glassine envelopes and then into a shipping envelope along with all necessary field sampling data. Next, carefully remove the entire PUF glass cartridge assembly using gloves and immediately wrap the entire PUF cartridge sample in aluminum foil. Then place the sample in a cooler for transport to the laboratory. Make sure all pertinent field information accompanies the sample so the laboratory can properly identify the sample.

It should be mentioned that the use of a glassine envelope ensures that all particulate matter collected on the filter will remain with the filter. The laboratory, in turn, should make sure that all particulate matter found loose in the glassine envelope is also removed with the exposed filter.

Routine Checks--

The following listed checks should be made when removing the sample media:

1) Check the particulate filter for signs of air leakage. Leakage may result from a worn gasket or an improperly installed gasket. If a leakage is observed, void the sample, determine the cause, and take corrective action before starting another sampling period.

2) Visually inspect the gaskets to see if glass fibers from the filter are being left behind, resulting from over-tightening of the upper plate ring and swing nuts.

3) The operator must check the exposed filter for physical damage such as holes, cuts, etc. that may have occurred during sampling or after sampling. Physical damage to the filter after sampling does not always invalidate the sample as long as all pieces of the filter are included in the folder. However, any loss of sample due to leakages during the sampling period or to loss of loose particulates from the filter after sampling will invalidate the sample.

4) Visually inspect the PUF cartridge gaskets for wear and make sure no leaks are present in the sampling module.

5) Spot check the air flow rate calibration by installing a GWM G40 flow calibration device and checking the air flow rate with the venturi valve full open and with a filter and PUF insert installed. If the magnehelic gauge reading and its corresponding flow rate value from the primary calibration curve and the GMW G40 flow rate are in error by more than 5%, recalibrate.

Any comments pertinent to the quality of the sample or the general operation of the sampler must be recorded on the appropriate sampling logsheet. Information regarding operation of the sampler must also be recorded.

8.1.5 Preventive Maintenance Program

A schedule of preventive maintenance should be maintained for each sampler by the operator.

Sampler Motor--

Motor brushes require replacement about every 3 months or 15 runs for motors operating without a 90-volt transformer. The brushes should also be checked for uneven wear after this period of time. Such wear may be an indication of motor problems and may necessitate replacement of the motor if it is great enough.

To replace motor brushes, remove the threaded top and slide the whole motor out of the motor housing. The brushes are each held in place by two small screws and a bracket. When installing the new brushes, make sure they seat properly against the armature. Some of the brushes are slotted to ensure proper fit. Be sure to replace the old brushes with the same style, as there are several different types in use. After installing new brushes, the motor should be run for about 20 minutes before taking any readings to burn the brushes in. The motor should be run against some resistance, such as with a clean filter and PUF plugs installed.

Record all sampler brush changes with date performed and operator's initials in the sampler log sheet and on a label which is to be attached to the sampler motor.

Gaskets--

Worn gaskets, whether for the particulate filter or the PUF cartridge, must be checked and replaced where necessary. Any other potential problems with proper air sealing such as a bent or warped upper plate must be addressed.

Dual Sampling Module--

Although leaks in the sampling module are not common if the parts are properly assembled, they do occasionally occur because of various reasons. If a leak is suspected, disassemble the module and check all parts thoroughly. Also check the connection of the sampling module to the motor.

Miscellaneous Equipment--

All tubing for connecting the pressure tap of the motor to the magnehelic gauge should be checked periodically for proper connections and any cracking or deterioration of any other rubber components. All electrical connections should be checked. Any exposed wires should either be covered with electrical tape or replaced with new cord.

No regular maintenance is required for the seven-day timer, elapsed time indicator, or magnehelic gauge. If any of these fail to operate properly, they should be replaced.

Some shelters are not anodized and may require surface treatment to avoid oxide buildup. Wire brushes, steel wool, and cans of clear spray paint are available for touch up work. WD-40 can be used to lubricate hinges and hasps.

Sampler Breakdown Troubleshooting--

If the sampler motor fails to operate, a few checks can be made in the field to locate the faulty component.

Start with the power source. Check the lead cord for proper connection at the power outlet and at the female end where it connects with the 7-day timer.

There are two major areas where power can be interrupted: 1) motor; and 2) timer. Check the motor by plugging the motor directly into the main power. If the motor runs, the 7-day timer is faulty and should be replaced. If the motor does not work, replace or repair the unit. The timer can also be checked by noticing if the ETI is advancing when the manual switch is on; however, the timer should also be checked as described above.

8.2.0 Audits and Precision

Audits--

Proper implementation of an auditing program will serve a two-fold purpose: 1) to screen the data to detect whether the data quality is adequate, and 2) to determine data quality in terms of the precision.

Performance Audits--

Flow checks will be conducted between sample runs for every sampler in use in the study. In addition, flow audits will be conducted at least once during the study to independently determine the status of the samples.

Systems Audit--

The system audit consists of random on-site inspections and review of the quality assurance system used for the total measurement system (sample collection, sample analysis, data processing, etc.). System audits are normally a qualitative appraisal of system quality. A systems audit should be conducted at the beginning of a new monitoring system and as appropriate thereafter to audit significant changes in system operation.

Precision--

Collocated samplers are used to estimate precision. These precision checks will be carried out in accordance with 40 CFR Part 58 as published May 10, 1979 at one of seven (7) sites of the study.

8.2.1 SVOC Sampler Flow Audits Conducted by McLaren/Hart

Frequency--

Each site must be audited at least once during the study.

Equipment--

The portable audit equipment used is a GMW Model G40 orifice-manometer calibration kit. The calibration kits are certified by GMW as transfer flow standards against a primary Roots-Connersville rotary dry gas meter. Each calibration kit is supplied with a calibration curve (orifice static pressure [▲H] vs. air flow rate [SCFM]).

Procedure--

1) Remove existing filter and any PUF/XAD-2 resin inserts, store in a safe place, and secure with G40 plate supplied with calibration kit. Check alignment of upper plate gasket and tighten securely to prevent any leaks.

2) Attach U-tube manometer to side of sampler and open both valves which are used to prevent green manometer fluid from leaking during transport. Attach one line to GMW calibrator port; the other end of manometer must be open to atmosphere. Adjust scale on manometer for zero reading. (The fluid in the manometer is distilled water with fluorescein dye with a specific gravity of 1.00 and a freezing point of 32°F. No other fluid may be substituted, use only the fluid supplied with the audit device).

3) With the audit device in place, operate the PUF sampler in its normal manner. Allow motor to run for at least five minutes before taking the first reading. Record the audit device manometer readings (left and right) and corresponding magnehelic gauge readings on the data sheet in the proper calibration spaces. Look up standard air flow rate(s) from supplied calibration curve based on audit device manometer reading and record on form. Also record the corresponding indicated air flow rate on the calibration curve for Magnehelic vs. SCFM and calculate the percent difference of two readings as follows:

$$\frac{QInd - Qact}{Qact} \times 100\%$$

If greater than ± 10% for any one flow check, check for leaks and then perform a primary calibration.

4) Remove and stow the GMW G40 calibration kit. Install a clean, glass fiber filter, new PUF plugs/XAD-2 absorbent, and prepare timer for the scheduled sample run. Note ETI reading at this time so that the ETI start reading can be adjusted accordingly for the next sample.

8.2.2 Parallel (co-located samplers) Measurements for Precision

At selected sites in the monitoring study (7 samplers), a second PUF sampler will be operated. The two duplicate samplers will be located at the same elevation (≈ 2 meters) and between 2 and 4 meters apart. One sampler at each location is designated beforehand as the official sampler; the identity of each sampler must be maintained. Calibration, sampling and analysis must be the same for both samplers. The differences in concentration of each measured SVOC compound between the official and duplicate samplers are used to calculate precision for each SVOC as shown below:

Xi = Concentration of official sampler (ng/m^3)

Yi = Concentration of duplicate sampler (ng/m^3)

$di = \frac{(Yi - Xi)\,100}{Xi}$ = percent difference

$dj = \Sigma\, di/n$ = average percent difference for the jth PUF pair

$Sj = \frac{\Sigma\, di^2 - (\Sigma\, di)^2/n}{n - 1}\ ½$ = standard deviation for the jth PUF pair

The 95 percent probability limits for the jth PUF pair are calculated from:

Upper 95% probability limit = $dj + 1.96\ Sj/\sqrt{2}$

Lower 95% probability limit = $dj - 1.96\ Sj/\sqrt{2}$

Precision for SVOC's for this study is calculated as follows (assumes different numbers of paired measurements are made at collocated sites):

$D = \frac{\Sigma\, nidi}{\Sigma(ni - 1)}$ = average %

$S_a = \frac{\Sigma(ni - 1)S^2}{\Sigma(ni - 1)}\ ½$ = pooled standard deviation

Upper 95 Percent Probability Limit = $D + 1.96\ Sa/\sqrt{2}$

Lower 95 Percent Probability Limit = $D - 1.96\ Sa/\sqrt{2}$

At low concentrations agreement between the measurements of collocated samplers, expressed at 95% probability limits, may be poor. Therefore a tally is kept for each sample measuring less than 30 ng/m^3.

The four individual variables that can be checked to determine the performance of the PUF sampling system are as follows:

1) PUF plug "cleanliness"
2) Flow rate calibration
3) Exposed filter and PUF/XAD-2 analyses
4) Data processing

The use of collocated samplers is a convenient method to check the resultant of these individual variables. Out of control values imply errors in one or more of the samples collection and analysis steps. The precision check program is designed to cover combinations of sample handling and analysis, collection, and data processing and will document the overall performance of independent actions involved.

When possible, sites with the highest concentrations are to be selected for this program, and operated in accordance with routine procedures. The result of both the official and duplicate PUF sampling will be reported. The precision limits determined from the collocated samplers will be used to validate data for SVOC's in the study.

Proper siting and exposure is essential. The two PUF samplers should be adjacent but no closer than 6 feet (2M) to avoid cross recirculation. Two complete systems should be used including separate timers. Operation should be in strict accordance with the routine procedures given in this section.

Collocated PUF samplers will be identified on their respective log sheet. All collocated PUF samplers will be distinctively marked as such on the outside front portion of the shelter roof.

8.3.0 Primary Calibration Procedures

Preliminary calibrations are required of all sampling equipment and sub-components such as elapsed time indicators, etc. in order to establish the accuracy level of the equipment used. The following procedures are used to check such accuracy and to be used as part of the overall Quality Assurance Program.

Elapsed Time Indicator--

Elapsed Time Indicators (ETI) should be checked for accuracy against a timepiece of known accuracy prior to being placed in service.

Allow the ETI and the timepiece to run simultaneously for a 24-hour period. An error of more than two minutes warrants an adjustment or replacement of the indicator.

Record results of these checks in the time calibration log sheet, form TCAL-1, found in Appendix A.

Seven-Day Timer--

Every timer, prior to field use, should be checked for accuracy using the calibration procedure outlined below.

The following steps outline the calibration procedure:

1) Plug the timer into a standard 110-volt power source. Several timers may be plugged into a common source.
2) Adjust the dial (turn clockwise only) to read the correct current time and day.
3) Set the trippers for a 24-hour test period. Try to make this setting at least two hours before the actual start time.

4) Plug a test light into a female outlet of the timer and manually check for power with the ON-OFF switch.

5) Record the initial ETI reading.

6) Allow the system to operate for the 24-hour test period and determine the total elapsed time by subtracting the initial ETI reading from the final reading.

If the total elapsed time is within the ± 15 minutes for a 24-hour time period, the timer is acceptable for field use.

If the total elapsed time is not within these limits, reset the trippers and repeat the test.

Sampler--

Each sampler must be calibrated prior to the start of the study.

A GMW Model G40 orifice-manometer calibration kit which has been certified by GMW as transfer flow standards against a primary Roots-Connersville rotary dry gas meter and is supplied with a calibration curve (orifice static pressure [▲H] vs. air flow rate [SCFM]), is used to calibrate the sampler..

Procedure--

1) Remove existing filter and any PUF/XAD-2 resin inserts, store in a safe place, and secure with G40 plate supplied with calibration kit. Check alignment of upper plate gasket and tighten securely to prevent any leaks.

2) Attach U-tube manometer to side of sampler and open both valves which are used to prevent green manometer fluid from leaking during transport. Attach one line to GMW calibrator port; the other end of manometer must be open to atmosphere. Adjust scale on manometer for zero reading. (The fluid in the manometer is distilled water with fluorescein dye with a specific gravity of 1.00 and a freezing point of 32°F. No other fluid may be substituted, use only the fluid supplied with the audit device).

3) With the flow calibration device in place, operate the PUF sampler in its normal manner without any filter or PUF/XAD-2 inserts installed. Make sure the venturi flow valve is fully open. Allow motor to run for at least five minutes before taking the first reading. Record flow calibration device manometer readings (left and right) and corresponding magnehelic gauge readings on the data sheet in the proper spaces. Look up standard air flow rate(s) from supplied calibration curve for the flow calibration device manometer reading and record on form. If the magnehelic gauge reading is not at 70, adjust the voltage variator until the magnehelic gauge reads 70 (make sure to check for leaks first). Record the corresponding air flow rate in SCFM from the supplied curve for the GMW-40 unit.

4) After adjustment to 70, close the venturi flow valve enough to reduce the magnehelic gauge reading to 60. After a stable is obtained, record the corresponding manometer readings and resultant SCFM value from the GMW-40 Curve. Repeat this step for magnehelic gauge settings of 50, 40, 30, and 20. After completion of these steps, plot the magnehelic gauge settings vs. SCFM (Y-axis) in order to come up with a primary calibration curve for the sampler.

5) Remove and stow the GMW G40 calibration kit. Install the clean, glass fiber filter, new PUF plugs/XAD-2 absorbent, and prepare timer for the scheduled sample run. Make sure that the venturi flow valve has been opened up fully again. Note ETI reading at this time so that the ETI start reading can be adjusted accordingly for the next sample.

Flow Calibration Procedure Prior to Sampling--

The above procedural steps establish the primary calibration curve for the PUF sampler in question. Before actual sampling, perform the following procedure:

1) With new filter and PUF/XAD-2 inserts installed, open valve and warm up sampler for 5 minutes.

2) Adjust voltage to give a magnehelic gauge reading corresponding to 9.3 SCFM based on the above primary calibration curve. The value of 9.3 SCFM is 110% of the recommended air flow rate of 8.5 SCFM (average of flow range of 200-280 liters per minute) as specified in the USEPA TO-4 method.

3) Attach the GMW-40 flow calibration device and verify the accepted flow by determining the SCFM from the manometer readings and the GMW-40 calibration curve.

4) Record all pertinent information and then return the sampler to its normal sampling mode.

8.3.1 PUF (SVOC) Sampler Calibration Protocol

PUF (SVOC) sampler flowrates are calibrated using a certified flow calibration device (GMW-40) which has been calibrated against a Roots-Connersville Positive Rotary Dry Gas Meter. The Roots-Connersville is considered a primary field standard. The Roots-Connersville gas meter is certified against the NBS standard by the manufacturer supplying the certified air flow calibration device. The certification of the flow calibration device is good for one (1) year as a transfer standard at which time the device must be recalibrated against a primary standard.

8.3.2 PUF Flow Audit Device Certification

Equipment: The audit device is a GMW-40 calibration kit. Certification of this device requires a primary standard Roots-Connersville positive rotary dry gas meter.

Frequency: The GWM-40 calibration kit must be recertified every twelve (12) months by either the manufacturer or by another certified source. Recertification procedure is as follows:

1) Assemble the equipment as follows:

   a) Attach the GMW-40 audit device with round rubber gasket directly to the Roots-Connersville Meter. Firmly compress gasket by hand tightening.

   b) Attach one leg of manometer to the nipple of the calibrator with the other leg fully open to atmosphere.

2) Perform the calibration of the audit device by the following procedure using additional filters to vary the flow through the audit device:

   The orifice/manometer flow calibration device is calibrated by:

   a) Passing one-hundred cubic feet through the orifice.

   b) Recording the time for this quantity of air to pass through the orifice.

   c) Measuring the difference between existing atmospheric pressure and the pressure at the inlet of the gas meter. This provides a means to convert the volume of the air passing through the meter to the corresponding volume at existing atmospheric pressure.

d) Calibration curve data is generated by running the system and varying the number of filters in place. Four calibration points are obtained by running the sampler with additional filters installed.

e) Calibration curve is obtained by plotting flow rate versus orifice/manometer reading on log-log paper. The resultant curve is described by the equation $Q = a(\Delta H)^b$, where "a" is the intercept and "b" is the slope of the log-log curve.

3) The specific calibration steps are as follows:

a) Attach flow calibration device to the primary standard.

b) Zero the water manometers by sliding their scales until the zero on the scale is level with the bottom of the meniscus.

c) Run hi-vol motor for a warm-up period of five minutes.

d) Install a filter on the audit device filter holder.

e) Record temperature and barometric pressure on the calibration provided.

f) Record the pressure drop across the orifice and the pressure drop at the inlet of the gas meter as shown on the two manometers.

g) Start the timer and let it run until 100 cubic feet of air, as indicated by the gas meter, have passed through the orifice. Record the elapsed time.

h) Place the additional filter squarely over screen. Secure upper plate of filter holder, taking care that there are no gaps at the edges between the holder gaskets and the filter(s).

i) Repeat steps g and h by adding additional filters to change the flow rates.

4) Calculations Description:

The series of calculations listed below are required to correct the flow to standard temperature and pressure conditions and to correct for any error, if applicable, in the Roots-Connersville meter based on prior calibration of the Roots-Connersville meter. Flow rate correct to STP (25.0° C and 29.92" Hg) versus orifice pressure drop are then plotted on log-log paper to obtain a straight line. Specific steps are:

a) Obtain observed flow rate by dividing 100 (cubic feet of air passing through orifice) by the elapsed time.

b) Convert the gauge pressure (partial vacuum) at the inlet of the gas meter from inches of water vacuum to inches of mercury vacuum by dividing inches of water by 13.6 (specific gravity of mercury).

c) Obtain the absolute pressure at the inlet of the gas meter by subtracting the gauge pressure at the inlet of the gas meter from the atmospheric pressure, both in inches of mercury.

d) Correct, because of error in the gas meter, where applicable, observed flow rate to corrected meter flow rate by reference to a corrected meter flow rate table (corrected flow rate table is based upon a prior calibration of the Roots-Connersville meter).

e) Obtain the room condition flow rate by multiplying the corrected meter flow rate by the ratio of the absolute pressure at the meter inlet to atmospheric pressure.

f) Correct the room condition flow rate to STP conditions flow rate by multiplying room condition flow rate by a correction factor. The correction factor is equal to:

$$\left[\frac{273.15 + 25.0}{273.15 + \text{Room Temp.}^\circ\text{C}} \times \frac{\text{Barometric Pressure in } H_g}{29.92 \text{ inches } H_g} \right]^{1/2}$$

g) Obtain a calibration curve by plotting STP flow rate versus pressure drop across the orifice on log-log paper, resulting in a straight line described by the equation:

$Q = a(\Delta H)^b$

where,

Q = air flow rate, cubic feet per minute

ΔH = pressure drop across the filter(s), inches of water

a = intercept (value of Q when ΔH equals one)

b = slope = $(\log Q - \log a)/\log \Delta H$

5) At the completion of the certification procedure attach the calculated slope and intercept values to the calibration kit with the date of the calibration certification.

6) When returning the audit device to the field insure that a sufficient quantity (12 or more) of currently authorized filters have been provided with the calibration kit for field use.

8.4.0 Processing SVOC Data

PUF sampler filters and PUF/XAD-2 inserts have been purchased by the subcontracting laboratory and supplied to the study after proper identification, cleaning, and inspection.

The filters and PUF/XAD-2 cartridges are then exposed and returned to the laboratory for analysis for semi-volatile organic compounds including PAH's. All information on the samples are kept by the laboratory. All other sampling data are kept on field sampling log sheets of which a copy is supplied to the laboratory for its information.

The laboratory completes its analyses and its records for each exposed filter and PUF/XAD-2 cartridge and forwards this information to McLaren/Hart, Albany for review and comment where necessary. These data are validated by McLaren/Hart and then submitted as final results.

QUALITY CONTROL (Q.C.)

MANAGEMENT

IX. QUALITY CONTROL (Q.C.) MANAGEMENT

Section		Revision	Date
9.0.0	Purpose	0	09/01/91
9.1.0	Chain-of-Custody	0	09/01/91
9.2.0	Sampling and Analytical Q.C. Procedures	0	09/01/91
9.3.0	Documentation	0	09/01/91

9.0.0 Purpose

The purpose of a Quality Control (Q.C.) program is to provide effective procedures for preserving the integrity of the data and an implementation program to carry out these Q.C. procedures properly and consistently.

The Q.C. program is a part of the overall Quality Assurance (Q.A.) program which essentially provides quality control of the Q.C. program.

Without such programs in place, all data acquired from this study may not be accepted by regulatory agencies or other involved parties.

Two documents have been drafted to meet both the Q.C. of the field sampling portion of this study and the Q.C. of the analytical portion of the study. This McLaren/Hart document covers the field sampling portion; Upstate Laboratories covers the analytical side in an accompanying document.

9.1.0 Chain-of-Custody Procedures

There are basically four (4) elements which chain-of-custody procedures must cover:

1) Data Collection -- includes testing, preparation and identification of the sample, charts, log sheets, or other data.

2) Sample Handling -- includes protection from contamination and tampering during transfer between individuals and from the sampling site to the laboratory.

3) Analysis -- includes storage of samples prior to and after analysis as well as data interpretation.

4) Preparation and Filing of Test Report -- includes evidentiary requirements and retention of records.

Failure to include any one of these elements in the collection and analysis of ambient air monitoring data may render the results of the program questionable and may seriously undermine the credibility of any report based on these data.

If the results of a sampling program are to be considered valid or used as evidence, a written record must be available listing the location of the data at all times. This chain-of-custody record is necessary to make a prima facie showing of the representativeness of the sampling data. Without it, one cannot be sure that the sampling data analyzed was the same as the data purported to have been taken at a particular time. The data should be handled only by persons associated in some way with the test study.

Each person handling the samples or sampling logs must be able to state from whom the item was received and to whom delivered. Recommended practice is to have each recipient sign a chain-of-custody form for the sampling data. Form COC-1 in Appendix A is the form which is used to establish the chain-of-custody. This form must accompany the samples at all times from the field to the laboratory. All persons who handle the data must sign the form. This form can also be found in the Laboratory QA/QC document for this study.

When using the U.S. Postal Service to transport sampling data, only certified and/or registered mail are used, and return receipts are requested. The return receipt is marked to indicate that the package is delivered to the addressee only. The addressee is the specific person authorized to receive the data.

When using courier services and other such means of shipment, information describing the enclosed sampling data should be placed on the bill of lading, etc. The package should be marked for delivery to the addressee only and it should be addressed to the specific person only who is authorized to receive the data.

It is important to realize that chain-of-custody procedures do not stop with delivery of the sample for analysis. The analyst must be prepared to testify that at all times the samples were either in his/her possession and view or in a secure place. Once the samples are analyzed, they should be returned to the secured storage location and retained at least until the report has been finally accepted.

Please refer to the Laboratory QA/QC Document which accompanies this document for specifics of the chain-of-custody procedures used for handling samples from this study.

9.2.0 Sampling and Analytical Q.C. Procedures

To establish the basic validity of the ambient air monitoring data from this study, it must be shown that 1) the proper methods were used, 2) the equipment was accurately calibrated, and 3) the technical staff were qualified and competent.

The laboratory staff generally has the primary responsibility for determining that all analytical methods comply with the appropriate methods recommended or mandated for such compounds. The field technical staff is responsible for all operational aspects of the sampling equipment used. Each should be able to support and justify the test methods and calibration procedures used, especially in instances where it is necessary to deviate from accepted practices. For example, if the only reasonable test site has a less than ideal location, the responsible party must be competent to make a judgment based upon training and experience as to whether a representative sample can be obtained at the site. This determination should be recorded and included in the program's protocol. An after-the-fact site analysis may suffice in many instances, but good quality assurance techniques dictate that this analysis be made prior to spending the many man-hours required to collect the data. Similarly, the field operator must be confident that the equipment was accurately calibrated using correct and established calibration methods.

Preparation -- Prior to the implementation of a sampling and analysis program, a variety of sampling and analysis equipment must be calibrated. All data and calculations involved in these calibration activities should be recorded in a log book. It is suggested that this log be arranged so that a separate section is designated for each apparatus and sampler used in the program.

In some cases, reagents or chemicals are prepared prior to sampling. Some of these reagents will be used to calibrate the equipment. Others such as absorbents will become an integral part of the sample itself. In any case, their integrity must be carefully maintained from preparation through analysis. If there are any doubts about the method by which the reagents for a particular test were prepared or about the competence of the laboratory technician preparing these items, the credibility of the ambient air samples and the test results will be diminished. It is essential that a careful record be kept listing the dates the reagents were prepared, by whom, and their locations at all times from preparation until actual use. Prior to the test, one individual should be given the responsibility of monitoring the handling and the use of the reagents. Each use of the reagents should be recorded in a log book.

Similarly, all filters must be selected and prepared prior to sampling. These should be inspected to assure that there are no pinholes, tears, creases, or other flaws which may affect the collection efficiency of the filter. Each step in the filter equilibration, weighing, and handling procedures should be carefully recorded by the technician to assure that the ambient air sample obtained with each filter adequately represents existing conditions.

Identification -- Care must be taken to properly mark all samples and monitoring device readings to ensure positive identification throughout the test and analysis procedures. The rules of evidence used in legal proceedings, for example, require that procedures for identification of samples used in analyses form the basis for future evidence. An admission by the laboratory analyst that he/she cannot be positive as to whether he/she analyzed sample No. 6 or sample No. 9, for example, could destroy the validity of the entire test report.

Positive identification also must be provided for any filters used in the program. If ink is used for marking, it must be indelible and unaffected by the gases, reagents, and, temperatures to which it will be subjected. Other methods of identification can be used, if they provide a positive means of identification and do not impair the capacity of the filter to function. If charts are used, the information must be placed upon each chart so as not to interfere with any of the data on the chart. The markings on each chart should be permanent.

Finally, each container should have a unique identification to preclude the possibility of interchange. Grease pencils may be used but a better method, however, is to affix an adhesive-backed label to the container. The number of the container should be subsequently recorded on the analysis data form. Additional information may be added as required, depending on the particular monitoring program.

Sample Handling

When samples are collected, they must be properly handled to ensure that there is no contamination and that the sample analyzed is actually the sample taken under the conditions reported. For this reason, samples should be kept in a secure place between the time they are collected and the time they are analyzed. It is highly recommended that all samples be secured until discarded. These security measures should be documented by a written record signed by the handlers of the sample.

Contamination and Tampering -- To reduce the possibility of invalidating the results, all collected samples must be carefully removed from the monitoring device and placed in sealed, non-reactive containers. The best method of sealing depends on the container; in general, the best way is to simply use a piece of tape to preclude accidental opening of the container and to act as a sufficient safeguard where all other aspects of the chain-of-custody procedure are observed. However, when there is any possibility of temporary access to the samples by unauthorized personnel, the sample container's or envelopes should be sealed with a self-adhesive sticker which has been signed and numbered by the operating technician. This sticker must adhere firmly to ensure that it cannot be removed without destruction. The samples should then be delivered to the laboratory for analysis. It is recommended that this be done on the same day that the sample is taken. If this is impractical, all the samples should be placed in a carrying case (preferably locked) in which they are protected from breakage, contamination, loss, and kept cold where necessary.

In transporting samples, it is important that precautions be taken to eliminate the possibility of tampering, accidental destruction, and/or physical and chemical action on the sample. These practical considerations must be dealt with on a case-by-case basis.

The person who has custody of the samples, charts, or other data must be able to testify that no tampering occurred. Security must be continuous. If the samples are put in a truck--lock it. After delivery to the laboratory, the samples must be kept is a secured place.

For ambient air samples to provide useful information or evidence, laboratory analyses must meet the following four basic requirements:

1) Equipment must be frequently and properly calibrated and maintained.

2) Personnel must be qualified to make the analysis.

3) Analytical procedures must be in accordance with accepted practice.

4) Complete and accurate records must be kept.

Proper records may consist of field logs, laboratory notebooks or summary sheets, or other data records which contain raw and finished analytical data.

In order to ensure the proper calibration and operation of all analytical instrumentation, the following specific QC procedures will be followed by the analytical laboratory for this study:

I. Volatile Organic Compounds (VOCs)

a) Daily 5-Point Calibration Standard Check

b) Daily Reference Standard

c) Trip Blank Analysis

d) Duplicate Analysis

e) Daily EPA Audit Cylinder Analysis

f) Reference Standard, Spike % Recovery Sample, and Duplicate Relative % Difference for Water Samples (if run on same day).

II TSP-Heavy Metals

a) 3-Point Calibration--every 10 samples with blank and outside reference sample

b) 10 Percent Spiking and Duping.

III. Mercury/Amines

a) 3-Point Calibration--every 10 samples with blank and outside reference sample

b) 10 Percent Spiking and Duping.

IV. Semi-Volatile Organic Compounds (SVOCs)/PAH's

a) Daily 5-Point Calibration Standard Check

b) Daily Reference Standard

c) Trip Blank Analysis

d) Duplicate Analysis.

Each set of air samples will include one (1) duplicate sample per parameter and one (1) field blank per parameter.

9.3.0 Documentation

Manual recording of data is required for ambient air monitoring. Standardized forms will be utilized to ensure that all necessary information is obtained. These forms should be designed to clearly identify the process tested, the date and time, location of monitoring station, and operating personnel. These data may determine the credibility of the data and should not be erased or altered. Any errors will be crossed out with a single line, and the correct value recorded above the crossed-out number. Initials of the person correcting the data must also be included on the form.

Original field records will not be discarded even if they become soiled. For neatness, the field data may be transcribed or copied for incorporation in a final report, but the originals will be kept on file. Since these records may be needed data, it is important that all field notes be legible and secured.

Although field notes and calculations are not generally included in the summary report, these materials may be required at a future date to bolster the acceptability and credibility of the report. Therefore, the full report including all original notes and calculation sheets will be kept in the file. Signed receipts for all samples, charts, and other data, are also filed.

In summary, although all original calculations and test data will not be included in the final report, they will be kept in the contractor's files. It is always a good rule to file all such reports together in a secure place.

DATA MANAGEMENT

X. DATA MANAGEMENT

Section		Revision	Date
10.0.0	Purpose	0	09/01/91
10.1.0	Data Processing/Validation Procedures	0	09/01/91
10.2.0	Data Reporting Procedures	0	09/01/91
10.3.0	Documentation	0	09/01/91

10.0.0 Purpose

Data management, a part of the over-all Quality Assurance Program, is needed in order to meet the data collection and reporting objectives of the study.

Data management includes the procedures established to store and maintain both field and laboratory data collection and analysis records. Data management also includes the establishment and implementation of data processing, validation, and reporting procedures.

10.1.0 Data Processing/Validation Procedures

All data (meteorological and ambient AQ) generated by this study must first be processed into established formats which can then be reviewed and validated according to predetermined criteria and/or standards. These criteria and standards include representativeness, sampling duration, comparability, and whether the Q.C. checks governing the valid operation of each monitoring device are properly followed. Such checks would be documented using the operator's logbook and the appropriate operating and/or calibration/audit forms which can be found in Appendix A of this manual. Data validation is the process whereby data are filtered and then accepted or rejected based on a certain set of criteria as mentioned above.

10.2.0 Data Reporting Procedures

Data reporting procedures require the complete coordination and cooperation of all parties involved in this study; namely, McLaren/Hart and its subcontracting analytical laboratory, Upstate Laboratories of Syracuse, New York.

Specifically, all ambient air quality sampling data generated by the laboratory must first be reviewed and validated by McLaren/Hart by reviewing and referencing field logs, notes, records, chain-of-custody forms, etc. The laboratory's Q.A. procedures and records are also reviewed and verified. Upon completion of this process, the validated raw data are returned to the laboratory for processing and final recording.

Final analytical data are then returned to McLaren/Hart for its use. As a final step in this process, McLaren/Hart compares these final lab data against its validated raw lab data for any discrepancies. Any such discrepancies are reviewed and discussed with the laboratory prior to final reporting.

All meteorological data are directly collected, processed, validated, and reported by McLaren/Hart, Albany. Internal QA/QC checks are utilized to maintain reliable and accurate data.

Refer to the Figure 4 in Appendix B which depicts this data reporting process.

10.3.0 Documentation

All field sampling results are calculated and recorded in logbooks and special forms according to sampling methodology and type of information recorded. For example, routine site observations and checks are entered into the operator's logbook for that monitoring site. Other necessary information pertaining to the handling of the samples would go on chain-of-custody forms and/or field sampling data sheets. All such information is used to validate collected samples by both laboratory and McLaren/Hart personnel. Without these records, such data can not be validated or accepted as reliable data. Included in these required records are audit and primary calibration data which establish the level of accuracy of the sampling air flow rates used in the calculations for determining the ambient contaminant concentrations.

APPENDIX A

APPENDIX A

FORMS

Form	Description	Revision	Date
SR-1	Field Engineer Status Report	0	09/01/91
INV-1	Ambient Air Sampling Equipment Inventory Log	0	09/01/91
JD-1	Julian Date Calendar -- Aug-Dec 1991	0	09/01/91
GC-1	General Calibration/Audit Data Log Sheet	0	09/01/91
TSPC-1	TSP Calibration/Audit Data Log Sheet	0	09/01/91
PMC-1	PM_{10} Calibration/Audit Data Log Sheet	0	09/01/91
TPS-1	TSP/PM_{10} Sampling Log	0	09/01/91
PUFC-1	PUF Calibration/Audit Data Log Sheet	0	09/01/91
PUFS-1	PUF Sampling Log	0	09/01/91
TCAL-1	Timer Calibration Log	0	09/01/91
VOCS-1	Canister Sampling Data Sheet	0	09/01/91
COC-1	Chain-of-Custody	0	09/01/91
SORB-1	PUF and Sorbent Tube Daily Calibration Log	0	09/01/91
ASDS-1	Air Sampling Data Sheet	0	09/01/91

FORM SR-1

FIELD ENGINEER STATUS REPORT

PROJECT N°: _____ **SITE LOCATION:** _____
DATE: _____ **SITE N°:** _____
TIME: _____ **OPERATOR:** _____

	Operational Yes / No	If No, Reason	Expected On-Line Time/Date	Estimated Number of Samples or Hours Lost
Pollutant Parameters VOC's (Canister)				
SVOC's (PUF)				
PM_{10}				
TSP				
Absorbent Tubes				
Meteorological Parameters CSI Datalogger				
Wind Speed				
Wind Direction				
Horizontal Sigma				
Ambient Air Temp.				
Soil Temperature				
Barometric Pressure				
Relative Humidity				
Precipitation				

COMMENTS: _____

(FLDENG_S)

FORM INV-1

AMBIENT AIR SAMPLING EQUIPMENT INVENTORY LOG

PROJECT: _____ PROJECT N°: _____ SITE LOCATION/SITE N°: _____

DATE: _____ TIME: _____ FIELD OPERATOR: _____

SAMPLING EQUIPMENT USED AT SITE				CONDITION	
	YES	NO	SERIAL N°	GOOD	POOR
TSP Sampler			*		
Mass Flow Controller					
Elapsed Time Indicator (ETI)					
7-Day Timer					
Pressure Recorder					
PM_{10} Sampler			*		
Mass Flow Controller					
ETI					
7-Day Timer					
Pressure Recorder					
Filter Paper Cartridge					
PUF Sampler			*		
Magnehelic					
ETI					
7-Day Timer					
Canister Sampler					

* Use S/N of motor

(Navfac/09–AMBSMP.LOG)

FORM JD-1

JULIAN DATE CALENDAR
1991

MONTH / DAY	AUGUST	SEPTEMBER	OCTOBER	NOVEMBER	DECEMBER
1	213	244	274	305	335
2	214	245	275	306	336
3	215	246	276	307	337
4	216	247	277	308	338
5	217	248	278	309	339
6	218	249	279	310	340
7	219	250	280	311	341
8	220	251	281	312	342
9	221	252	282	313	343
10	222	253	283	314	344
11	223	254	284	315	345
12	224	255	285	316	346
13	225	256	286	317	347
14	226	257	287	318	348
15	227	258	288	319	349
16	228	259	289	320	350
17	229	260	290	321	351
18	230	261	291	322	352
19	231	262	292	323	353
20	232	263	293	324	354
21	233	264	294	325	355
22	234	265	295	326	356
23	235	266	296	327	357
24	236	267	297	328	358
25	237	268	298	329	359
26	238	269	299	330	360
27	239	270	300	331	361
28	240	271	301	332	362
29	241	272	302	333	363
30	242	273	303	334	364
31	243		304		365

McLAREN/HART ENVIRONMENTAL ENGINEERING CORPORATION
AMBIENT AIR QUALITY MONITORING
CALIBRATION/AUDIT (Underline Which One)

FORM GC-1

DATA LOG SHEET

PROJECT: _____ PROJECT N°: _____ PROJECT LOCATION: _____
DATE: _____ TIME: _____ AIR TEMP (°C): _____ BAR. PRESS (mmHg): _____
OPERATOR: _____

Sampler Type: _____ TSP _____ PM_{10} _____ PUF _____ Canister (VOC) Sampler S/N: _____ Sampler Location/Site N°: _____
(Check One) Date of Last Calibration: _____ Date of Last Audit: _____
Flow Calibration Device Model: _____ S/N: _____ Date Last Certified: _____
Air Flow Calibration Curve: Q_{STD}[1] = a $(\Delta H)^b$ Where a = _____ b = _____

Plate or Position	Plate or Position	Flow Calibration Device Manometer Readings				Sampler Readings				
With Filter/ Cartridge/ Canister[6]	Without Filter/ Cartridge /Canister[7]	Left Leg	Right Leg	Total Legs	Std. Air Flow Rate (SCFM)[2]	Mass Flow Controller Set Point[3]	Dickson Recorder Set Point[3]	Magnehelic Gauge[4]	Pressure Gauge (PSIG)[5]	Flow Rate (SCCM)[5]
GMW w/o plate	70 Set Point								25	10
18-Hole or Position 1	60									
13-Hole or Position 2	50									
10-Hole or Postion 3	40									
7-Hole or Position 4	30									
5-Hole or Position 5	20									

1 25°C and 760 mmHg 2 Taken from Flow Calibration Device Calibration Curve or Above Equation 3 For TSP and PM_{10} Samplers–in SCFM (50 SCFM-TSP Flow Set Point; 40 SCFM-PM_{10} Flow Set Point) 4 For PUF Sampler only
5 For Canister (VOC) Sampler only (10 SCCM–VOC Flow Set Point) 6 For TSP Sampler only 7 For PM_{10}, PUF, and VOC Samplers

(Navfac-09/AMBAIR.DLS)

FORM TSPC-1

McLAREN/HART ENVIRONMENTAL ENGINEERING CORPORATION
TSP SAMPLING
CALIBRATION/AUDIT (Underline Which One)

DATA LOG SHEET

PROJECT: _____ **PROJECT Nº:** _____ **PROJECT LOCATION:** _____
DATE: _____ **TIME:** _____ **AIR TEMP (°C):** _____ **BAR. PRESS (mmHg):** _____
OPERATOR: _____

Sampler Type: ____ **TSP** ____ **PM_{10}** ____ **PUF** ____ **Canister (VOC)** **Sampler S/N:** ____ **Sampler Location/Site Nº:** ____
(Check One) **Date of Last Calibration:** _____ **Date of Last Audit:** _____
Flow Calibration Device Model: _____ **S/N:** _____ **Date Last Certified:** _____
Air Flow Calibration Curve: $Q_{STD}^{1} = a(\Delta H)^{b}$ **Where a =** _____ **b =** _____

Plate or Position	GMW Calibration Model ____ Manometer Readings			Std. Air Flow Rate (SCFM)[1]	TSP Sampler Readings		
	Left Leg	Right Leg	Total Legs		Mass Flow Controller Set Point[2]	Dickson Recorder Set Point[2]	Percent Difference (Indicated vs. GMW Flows)[3]
Filter Only					50		
18-Hole or Position 1					50		
13-Hole or Position 2					50		
10-Hole or Position 3					50		
7-Hole or Position 4					50		
5-Hole or Position 5					50		

1 From GMW calibration curve or equation above.
2 Set to an Air Flow Rate of 50 SCFM during initial calibration.
3 $\%Diff = \frac{Ind. - Actual}{Actual} \times 100\%$

(NAVFAC-09\TSP-SAMP.TBL)

FORM PMC-1

McLAREN/HART ENVIRONMENTAL ENGINEERING CORPORATION
PM_{10} SAMPLING
CALIBRATION/AUDIT (Und rline Which One)

DATA LOG SHEET

PROJECT: _____ **PROJECT Nº:** _____ **PROJECT LOCATION:** _____
DATE: _____ **TIME:** _____ **AIR TEMP (°C):** _____ **BAR. PRESS (mmHg):** _____
OPERATOR: _____

Sampler Type: ____ **TSP** ____ **PM_{10}** ____ **PUF** ____ **Canister (VOC)** **Sampler S/N:** ____ **Sampler Location/Site Nº:** ____
(Check One) **Date of Last Calibration:** _____ **Date of Last Audit:** _____
Flow Calibration Device Model: _____ **S/N:** _____ **Date Last Certified:** _____
Air Flow Calibration Curve: $Q_{STD}^{1} = a(\Delta H)^{b}$ **Where a =** _____ **b =** _____

Plate or Position	GMW Calibration Model ____ Manometer Readings			Std. Air Flow Rate (SCFM)[1]	PM_{10} Sampler Readings		
	Left Leg	Right Leg	Total Legs		Mass Flow Controller Set Point[2]	Dickson Recorder Set Point[2]	Percent Difference (Indicated vs. GMW Flows)[3]
Filter Only					40		
18-Hole or Position 1					40		
13-Hole or Position 2					40		
10-Hole or Position 3					40		
7-Hole or Position 4					40		
5-Hole or Position 5					40		

1 From GMW calibration curve or equation above.
2 Set to an Air Flow Rate of 40 SCFM during initial calibration.
3 $\%Diff = \frac{Ind. - Actual}{Actual} \times 100\%$

FORM TPS-1

McLAREN/HART ENVIRONMENTAL ENGINEERING CORPORATION
TSP/PM_{10} SAMPLING LOG
(circle one)

Project Name: _____ **Project Nº:** _____

Sampler Location/Site Nº: _____ **Sampler S/N:** _____

Sample Run Nº	Particulate Filter Nº	Sample Date	Operator Initials	Total Elapsed Sampling Time (mins)	Initial Tare Wt. (gm)	Final Tare Wt. (gm)	Tare Wt.Dif (Final-Initial) (gm)	Initial Air Flow Rate (SCFM)	Final Air Flow Rate (SCFM)	Ave. Air Flow Rate (SCFM)	Total Air Flow (SCF)	Conc. (ug/m^3)
1.												
2.												
3.												
4.												
5.												
6.												
7.												
8.												
9.												
10.												
11.												
12.												

(G:\Users\Eng\Eng4\Air-Samp.Frm)

FORM PUFS-1

McLAREN/HART ENVIRONMENTAL ENGINEERING CORPORATION
PUF (SVOC's) SAMPLING LOG

Project Name: _____ **Project Nº:** _____

Sampler Location/Site Nº: _____ **Sampler S/N:** _____

Sample Run Nº	PUF Cartridge Nº	Sample Date	Operator Initials	Initial ETI Reading	Final ETI Reading	Total Elapsed Sample Time (mins)	Initial Magnehelic Reading	Initial Air Flow Rate[1] (SCFM)	Final Magnehelic Reading	Final Air Flow Rate[1] (SCFM)	Average Air Flow Rate (SCFM)	Total Air Flow (SCF)
1.												
2.												
3.												
4.												
5.												
6.												
7.												
8.												
9.												
10.												
11.												
12.												

[1] From Calibration Curve (Magnehelic Reading vs. SCFM)

(G:\Users\Eng\Eng4\Air-Samp.Frm)

TIMER CALIBRATION LOG

Site Location	Timer Nº	Date Start	Date Stop	Elapsed Time Indicator Serial Nº	Test Period	Elapsed Time Indicator Reading	Accuracy	By *(signature)*

FORM: TCAL-1

FORM VOCS-1

McLAREN/HART ENVIRONMENTAL ENGINEERING CORPORATION
CANISTER SAMPLING DATA SHEET

Project Name: _____ **Project Nº:** _____

Sampler Location/Site Nº: _____ **Sampler S/N:** _____

Sample Run Nº	Canister Nº	Sample Date	Local Time	Operator Initials	Elapsed Timer Start	Elapsed Timer Stop	Total Sample Time (mins)	Pressure Gauge Start	Pressure Guage Stop	Air Temp. (°C) Start	Air Temp. (°C) Stop	% Rel. Humid. Start	% Rel. Humid. Stop	Rain Y / N
1.														
2.														
3.														
4.														
5.														
6.														
7.														
8.														
9.														
10.														
11.														
12.														

COMMENTS:

(G:\Users\Eng\Eng4\Air-Samp.Frm)

FORM COC-1

UPSTATE LABORATORIES, INC.

CHAIN OF CUSTODY RECORD

DUE DATE: _____

CLIENT	PROJECT NAME
McLaren/Hart Environmental Engineering Corporation	Portsmuth Naval Shipyard A.Q. Study

SAMPLE PRES.	DATE	TIME	COMP.	GRAB	STATION LOCATION	NO. OF CON-TAINERS	PM10	TSP	Nitrosodiphenyl - Amine	T-Ha(Volatile)						
					Loc 1	4	X	X	X	X						
					Loc 2	4	X	X	X	X						
					Loc 3	4	X	X	X	X						
					Loc 4	4	X	X	X	X						
					Loc 5	4	X	X	X	X						
					Loc 6	4	X	X	X	X						
					Loc 7	4	X	X	X	X						
					Loc 8	4	X	X	X	X						
					Loc 9	4	X	X	X	X						
					Dupe Location											
					ULI TRIP BLANK											

Sampled by: (Signature)	Date/Time	Received by: (Signature)	Relinquished by: (Signature)	Date/Time	Received by: (Signature)
Relinquished by: (Signature)	Date/Time	Received by: (Signature)	Relinquished by: (Signature)	Date/Time	Received by: (Signature)
Relinquished by: (Signature)	Date/Time	Received for Laboratory by: (Signature)	Date/Time	Remarks	

WITNESS: _____ DATE/TIME: _____

WEATHER CONDITIONS: _____

McLAREN/HART ENVIRONMENTAL ENGINEERING CORPORATION
PUF SAMPLING
CALIBRATION/AUDIT (Underline Which One)

FORM PUFC-1

DATA LOG SHEET

PROJECT: _____ PROJECT N°: _____ PROJECT LOCATION: _____

DATE: _____ TIME: _____ AIR TEMP (°C): _____ BAR. PRESS (mmHg): _____

PUF Sampler S/N _____ Sampler Location/Site N°: _____

Last Calibration: _____ Last Audit: _____ Operator: _____

Flow Calibrator Model: _____ S/N: _____ Date Last Certification: _____

Calibration Curve: $Q_{STD} = a\ (\Delta H)^b$ where a = _____ b = _____

Ball Valve Position[1]	GMW Calibrator Model _____ Manometer Readings			Std. Air Flow Rate (SCFM)[2]	PUF Sampler Readings			
					Primary Calibration	Audit		
	Left Leg	Right Leg	Total Legs		Magnehelic Gauge Setting	Magnehelic Gauge Setting	Indicated Air Flow Rate (SCFM)[4]	% Diff.[5]
1 (Full Open)					70[3]			
2					60			
3					50			
4					40			
5					30			
6					20			

1 Without Filter and PUF Cartridge 2 From GMW Calibration Curve or Equation Above 3 Set Point of 70 adjusted with Variator and Ball Valve Full Open During Initial Calibration
4 From Magnehelic vs. Actual Flow Rate Calibration Curve 5 % Difference = (Ind.-True) /True x 100%

PUF AND SORBENT TUBE DAILY CALIBRATION LOG
NAVFAC, PNS

LOCATION _____ DATE _____ OPERATOR _____

PUF SAMPLER ID	CALIBRATION ORIFICE MODEL _____ S/N _____		SAMPLER VENTURI DATA		% DIFF BETWEEN CALIBRATION & SAMPLER FLOW RATES
	MANOMETER IN. H_2O	FLOW RATE SCF/MIN	MAGNAHELIC IN. H_2O	FLOW RATE SCF/MIN	
INITIAL					
FINAL					

SORBENT SAMPLER

ALEGRO S/N _____

BUBBLE METER
MODEL _____
S/N _____

SORBENT
MANIFOLD # _____

INITIAL FLOW RATE (CC/MIN)		FINAL FLOW RATE (CC/MIN)	
MERCURY	N-NITROSO-AMINE	MERCURY	N-NITROSO-AMINE

FORM SORB-1

AIR SAMPLING DATA SHEET
NAVFAC,PNS

LOCATION _____ DATE _____ OPERATOR _____

	INITIAL START UP							FINAL BREAK DOWN		
PM-10 UNIT S/N _____ SAMPLE # _____	Cover Off				1st Check	2nd Check	3rd Check			
	Time Set Recorder Pen Down			Dixon Reading				Final ETI		
	Initial ETI			Time				Stop Time		
	Start Time							Dixon Reading		
	Dixon Recorder							Total Time		
TSP LIMITS/N _____ SAMPLE # _____	Filter Installed			Dixon Reading				Stop Time		
	Time Set Recorder Pen Down			Time				Final ETI		
	Initial ETI							Dixon Reading		
	Start Time							Total Time		
	Dixon Reading									
PUF Unit # _____ Cartridge # _____ Sample # _____	Initial Flow			Megnahelic				Final Flow		
	Cover Off			Time				Stop Time		
	Initial ETI							Final ETI		
	Start Time							Final Maghahelic		
	Megnahelic									
NUTECH UNIT # _____ CANISTER # _____	Start Time			Pressure Gauge				Stop Time		
	Valve Switch-On			Time				Canister Closed		
	Canister Valve Open							Pressure Gauge		
	System Pressurizing							Total Time		
SORBENT HI-VOL S/N _____ MANI-FOLD # _____		Merc	Nitros						Merc	Nitros
	Initial Flow (cc/Min)			Unit Running				Final Flow (cc/min)		
	Plugs Off			Time				Time Off		
	Start Time							Total Time		
DUPLI-CATES										

FORM ASDS-1

APPENDIX B

APPENDIX B

FIGURES / TABLES

Figure/ Table	Description
Figure 1	Ambient Air Monitoring--Station Location Map
Table I	Ambient Air Monitoring--Locations and Parameters
Figure 2	NAVFAC Ambient Air Monitoring Study
Figure 3	Project Management Chart
Figure 4	Data Reporting Procedural Chart
Figure 5	Seasonal and Annual Rose Diagrams Showing Percentage Frequency of Wind Direction--March 1978
Figure 6	Wind Rose for NAVFAC--September-October 1991
Figure 7	NuTech Model 4000 VOC Canister Sampler--Flow Diagram
Figure 8	PUF SVOC Sampler
Figure 9	PUF SVOC Sampling Head
Table II	Target Compound List for NAVFAC Study
Figure 10	PM_{10} Sampler with Mass Flow Controller
Figure 11	PM_{10} Sampler Calibration Set-Up
Figure 12	TSP Hi-Vol Sampler
Table III	Summary of Key USEPA Probe Siting Criteria for Air Monitoring Stations

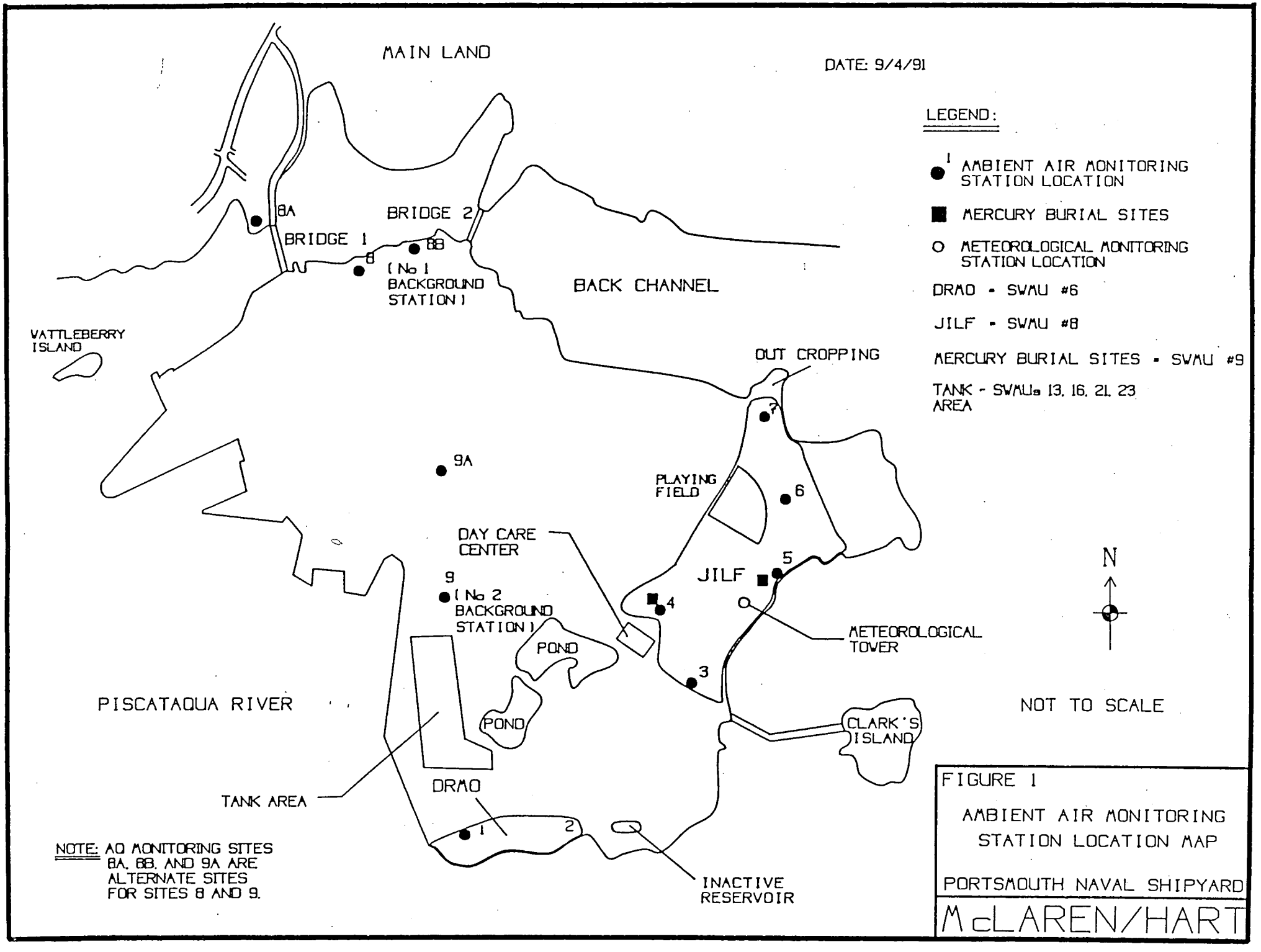

FIGURE 1

AMBIENT AIR MONITORING STATION LOCATION MAP

PORTSMOUTH NAVAL SHIPYARD

McLAREN/HART

TABLE I

AMBIENT AIR MONITORING STATION LOCATIONS AND PARAMETERS

Area	Station Nº	General Location	Parameters
DRMO (SWMU Nº 6)	1	North-northwest corner of DRMO	PUF, PM_{10},TSP, Hg
	2	South-southeast corner of DRMO	PUF, PM_{10},TSP, Hg
JILF (SWMU Nº 8)	3	South-southeast corner of JILF	PUF, VOC, PM_{10},TSP, Hg
	4	Present asbestos site, north of Day Care Center	PUF, VOC, PM_{10},TSP, Hg
	5	Present, known mercury burial site	PUF, VOC, PM_{10},TSP, Hg
	6	North side of JILF, east of Playing Field	PUF, VOC, PM_{10},TSP, Hg
	7	Extreme north side of JILF and parking lots, south of Public Quarters, H27	PUF, VOC, PM_{10},TSP, Hg
1st Background	8	To be Selected	PUF, VOC, PM_{10},TSP, Hg
2nd Background	9	To be Selected	PUF, VOC, PM_{10},TSP, Hg
Duplicate **	10	To be rotated from site to site	PUF, VOC, PM_{10},TSP, Hg

VOC - Volatile Organic Compounds (TCL and Appendix IX Volatiles Measured by EPA Methodology TO-14)
PM_{10} - Respirable Suspended Particulates Sampler
TSP - Total Suspended Particulates Hi-Vol Sampler (includes heavy metals)
Hg&Amines - Sorbent tubes
* - Will also include the meteorological station
** - For QA/QC purposes, each AQ monitoring parameter (VOCs, PUF, PM-10, TSP, and Hg) will include a duplicate sampler for each sampling run, to be operated in parallel with one of the routinely scheduled samplers. The duplicate sampler will be rotated from site to site during the sampling study period. Additionally, a blank will also be used for each parameter for each sampling run.

NAVFAC AMBIENT AIR MONITORING STUDY

FIGURE 2

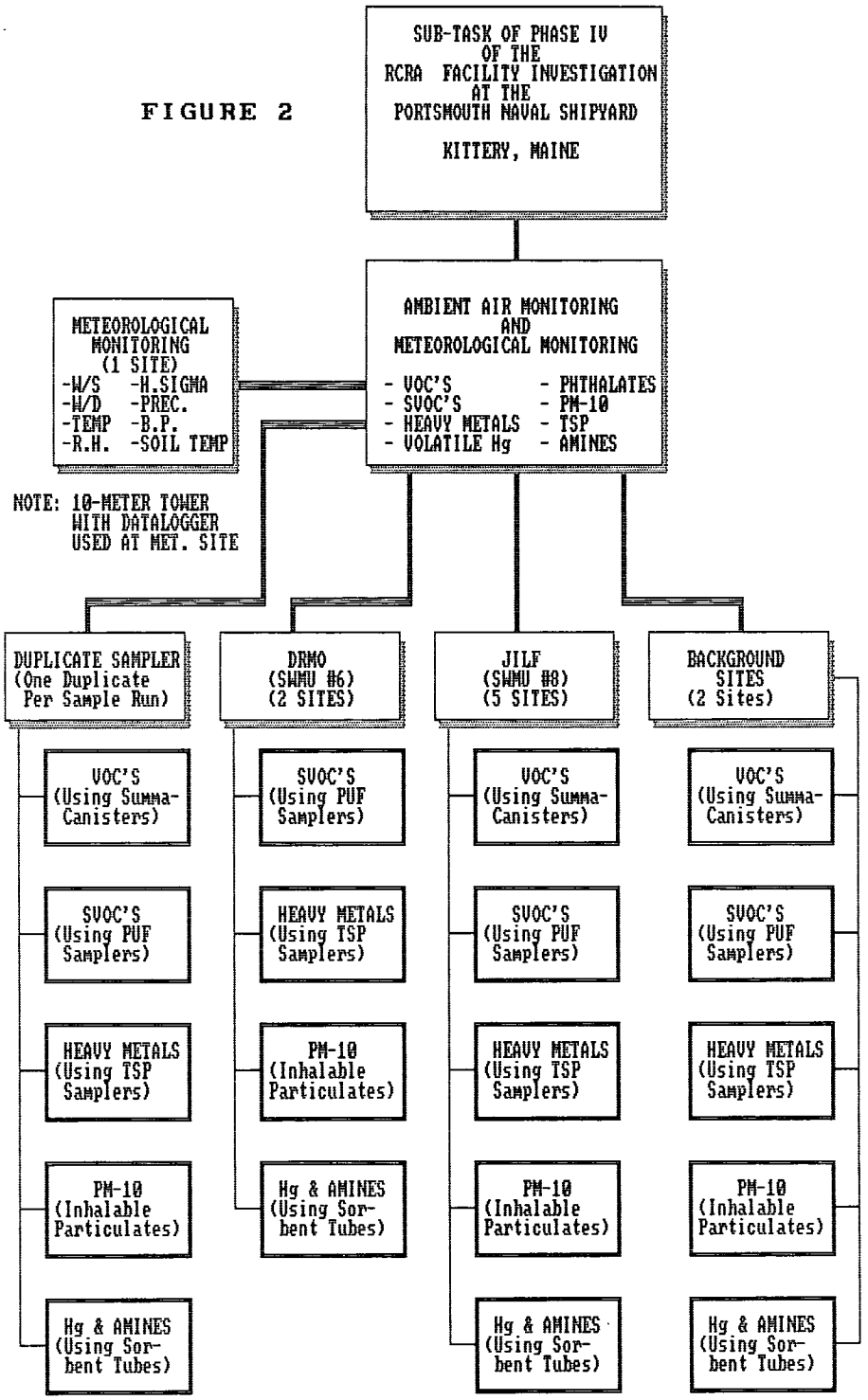

COMMENTS: AQ MONITORING STUDY WILL BE CONDUCTED FOR A PERIOD OF AT LEAST THREE (3) WEEKS AND NOT MORE THAN FOUR (4) WEEKS. TOTAL NUMBER OF SAMPLE RUNS WILL BE BETWEEN 10 AND 13. SAMPLING RUNS WILL BE FOR A 24-HOUR PERIOD AND THE SCHEDULE WILL BE ON AN EVERY-OTHER-DAY BASIS INCLUDING WEEKENDS. THE SAMPLING PERIOD WILL BEGIN AT MIDNITE AND END ON THE FOLLOWING MIDNITE. START-UP DATE OF MID-OCTOBER 1991 IS ANTICIPATED.

TARGETED COMPOUNDS INCLUDE THE FOLLOWING:

VOC'S: TCE, PCE, VINYL CHLORIDE, BENZENE, METHYLENE CHLORIDE
PESTICIDES(SVOC'S): DDD, DDE, DDT, PCB'S
PAH'S: BENZO(a)PYRENE, BENZO(a)ANTHRACENE, BENZO(b)FLUORANTHENE, BENZO(j)FLUORANTHENE, BENZO(k)FLUORANTHENE, CHRYSENE, BENZO(g,h,i)PERYLENE, BENZO(e)PYRENE, DIBENZ(a,h)ANTHRACENE, CYCLAPENTADIENO(cd)PYRENE, INDENO(1,2,3-cd)PYRENE
PHTHALATES: BIS (2-ETHYLHEXYL) PHTHALATE
NITROGEN COMPOUNDS: N-NITROSODIPHENYLAMINE
HEAVY METALS: ARSENIC, BARIUM, CADMIUM, TOTAL CHROMIUM, LEAD, NICKEL, ANTIMONY, BERYLIUM, MERCURY
PM-10: INHALABLE PARTICULATES
TSP: TOTAL SUSPENDED PARTICULATES

McLAREN/HART ENVIRONMENTAL ENGINEERING CORPORATION
ALBANY, NEW YORK

NAVFAC, PORTSMOUTH NAVAL BASE
KITTERY, MAINE

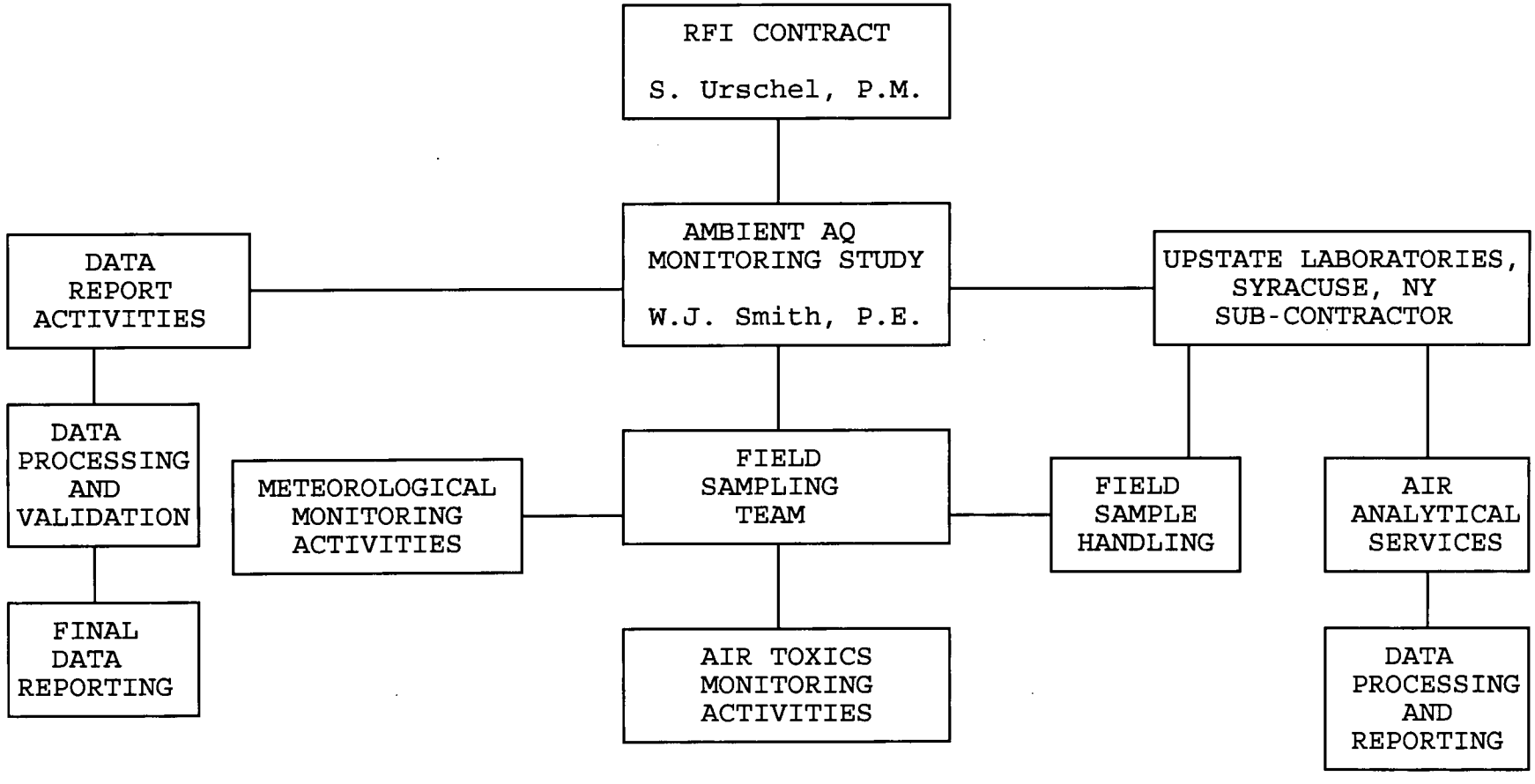

PROJECT MANAGEMENT CHART
Figure 3

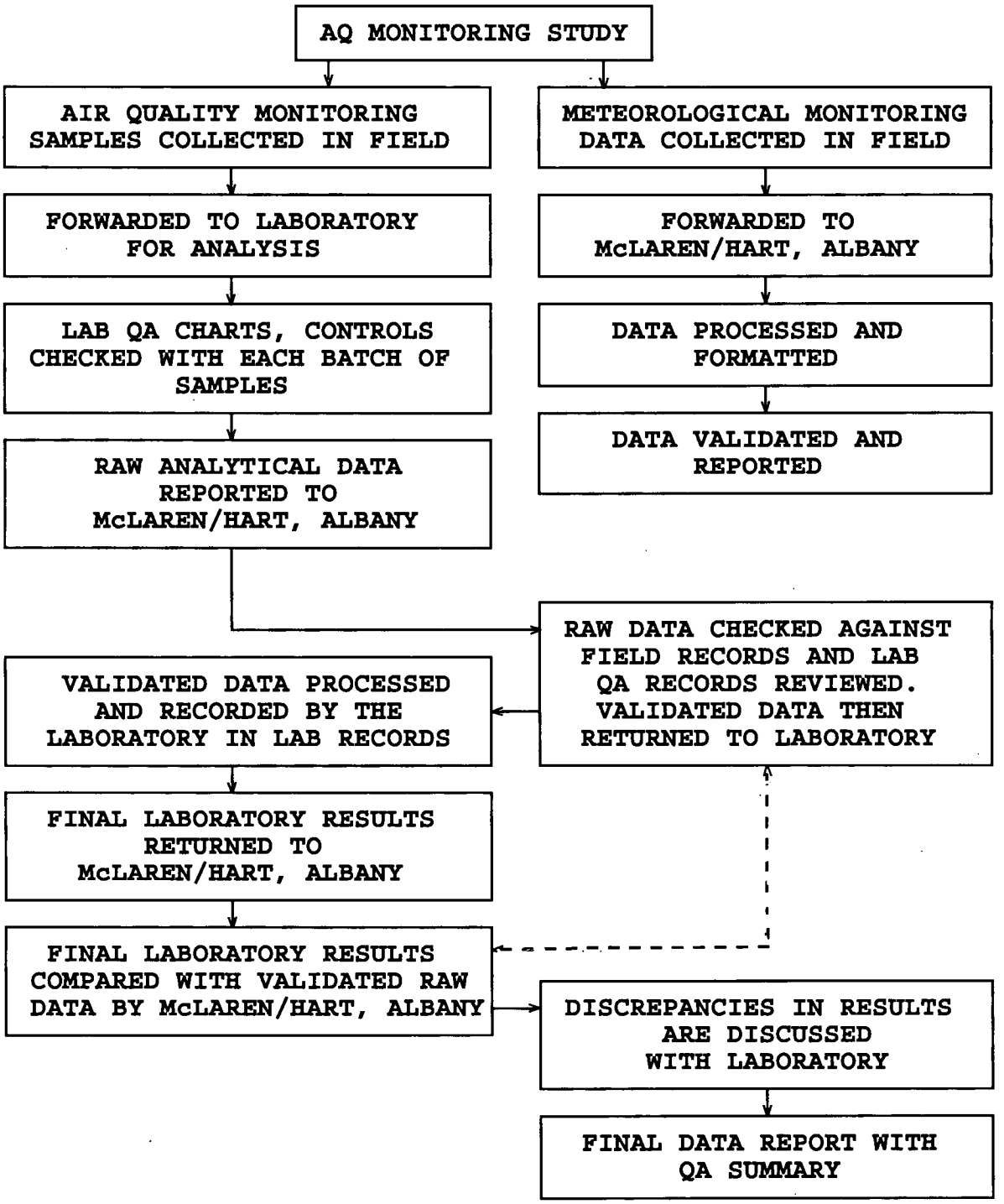

DATA REPORTING PROCEDURAL CHART

Figure 4

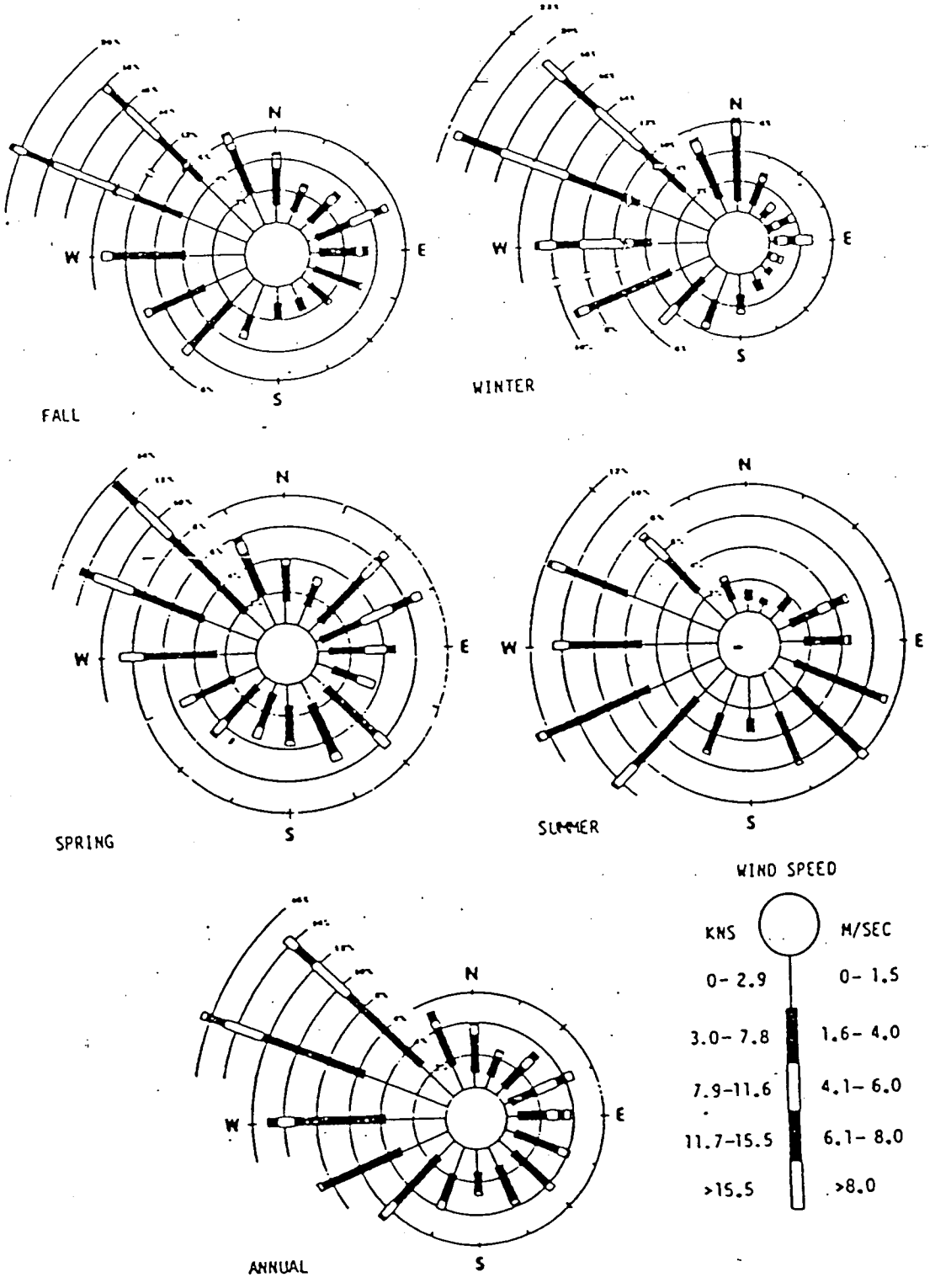

FIGURE 5

SEASONAL AND ANNUAL ROSE DIAGRAMS SHOWING PERCENTAGE FREQUENCY OF WIND DIRECTION

PORTSMOUTH NAVAL SHIPYARD

MCLAREN/HART

FROM: DREDGING, PORTSMOUTH NAVAL SHIPYARD
PORTSMOUTH NEW HAMPSHIRE - PARSONS
MARCH, 1978

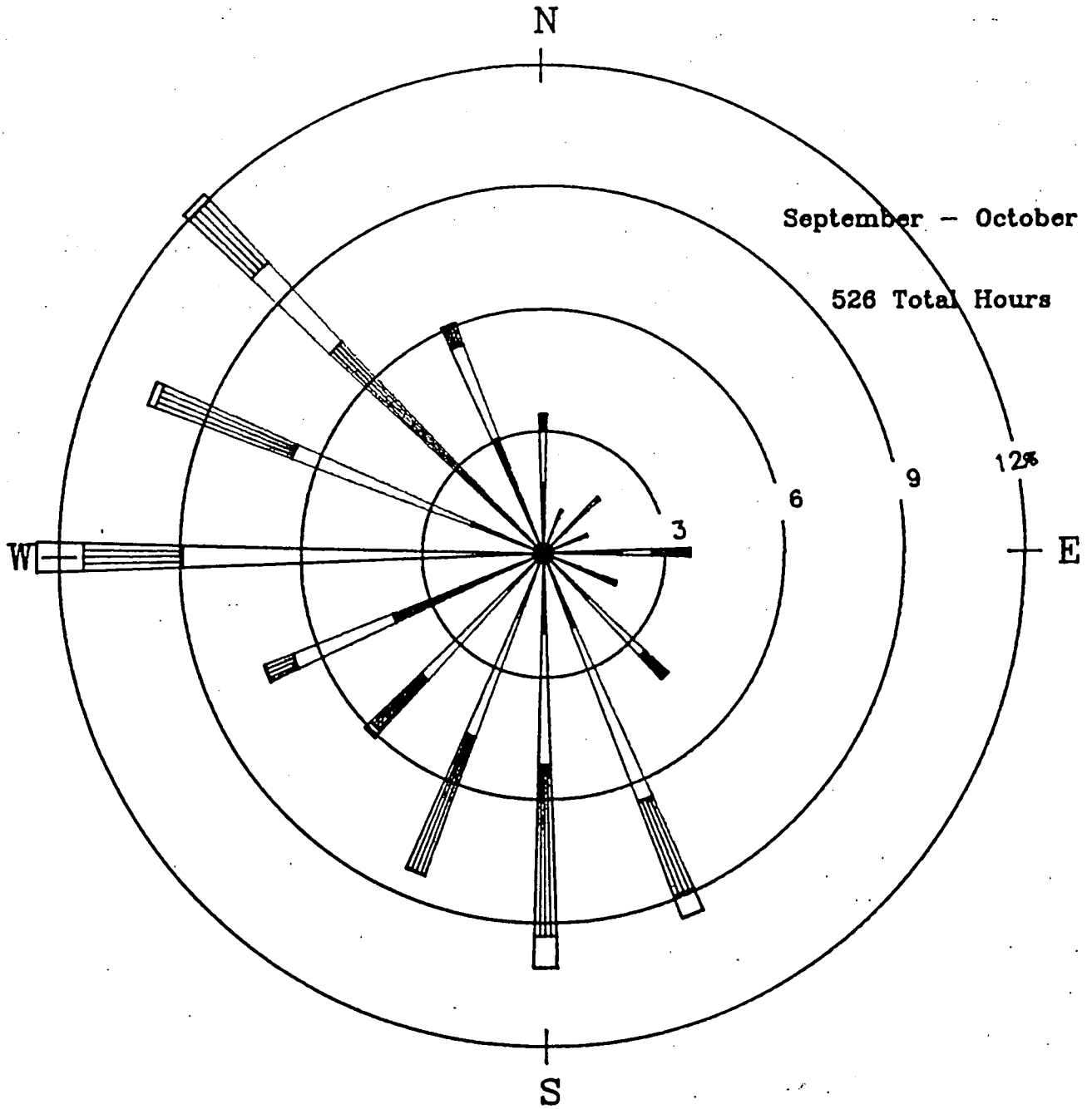

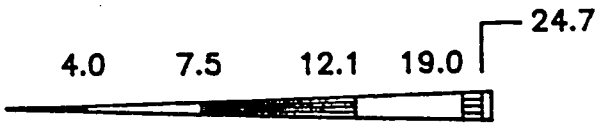

WIND SPEED CLASS BOUNDARIES
(MILES/HOUR)

NOTES:
DIAGRAM OF THE FREQUENCY OF OCCURRENCE FOR EACH WIND DIRECTION. WIND DIRECTION IS THE DIRECTION FROM WHICH THE WIND IS BLOWING. EXAMPLE – WIND IS BLOWING FROM THE NORTH 3.4 PERCENT OF THE TIME.

WINDROSE

NAVFAC 1
PERIOD:

FIGURE 6

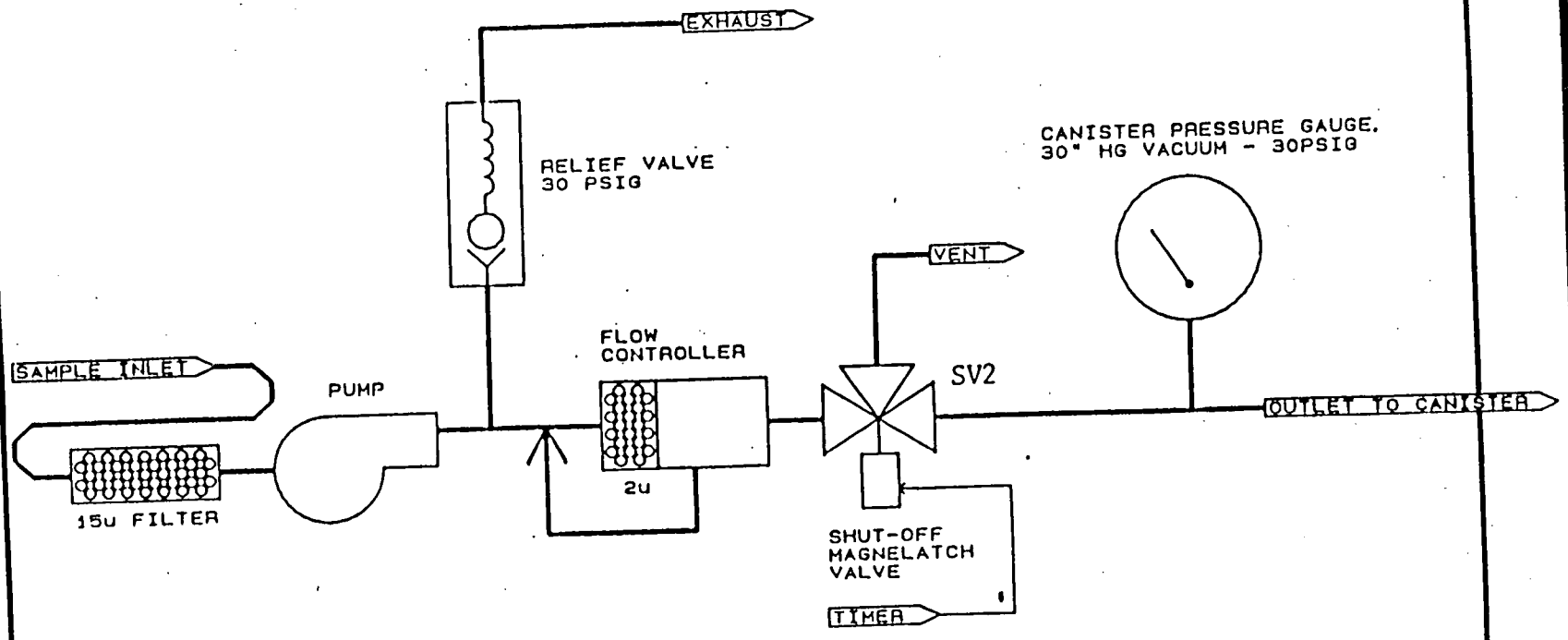

NUTECH MODEL 4000 VOC CANISTER SAMPLER

FLOW DIAGRAM

FIGURE 7

FIGURE 8

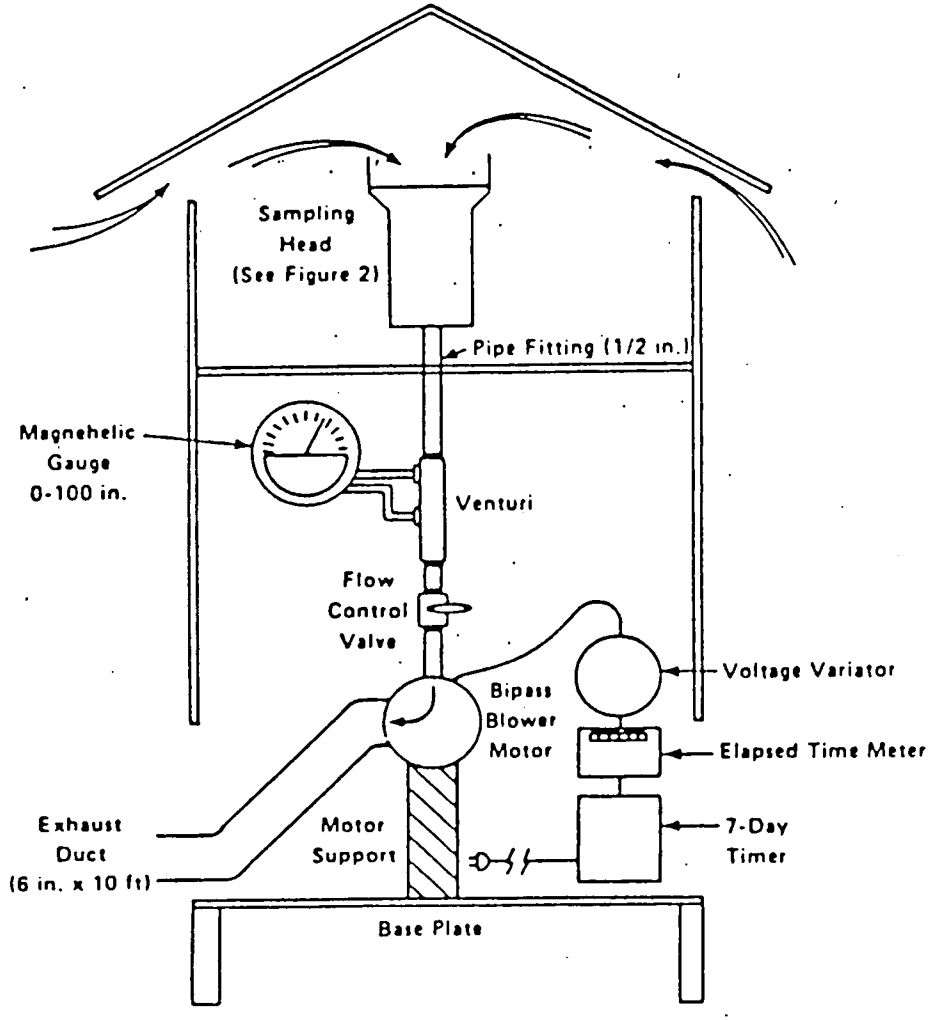

PUF PUF (SVOC) SAMPLER

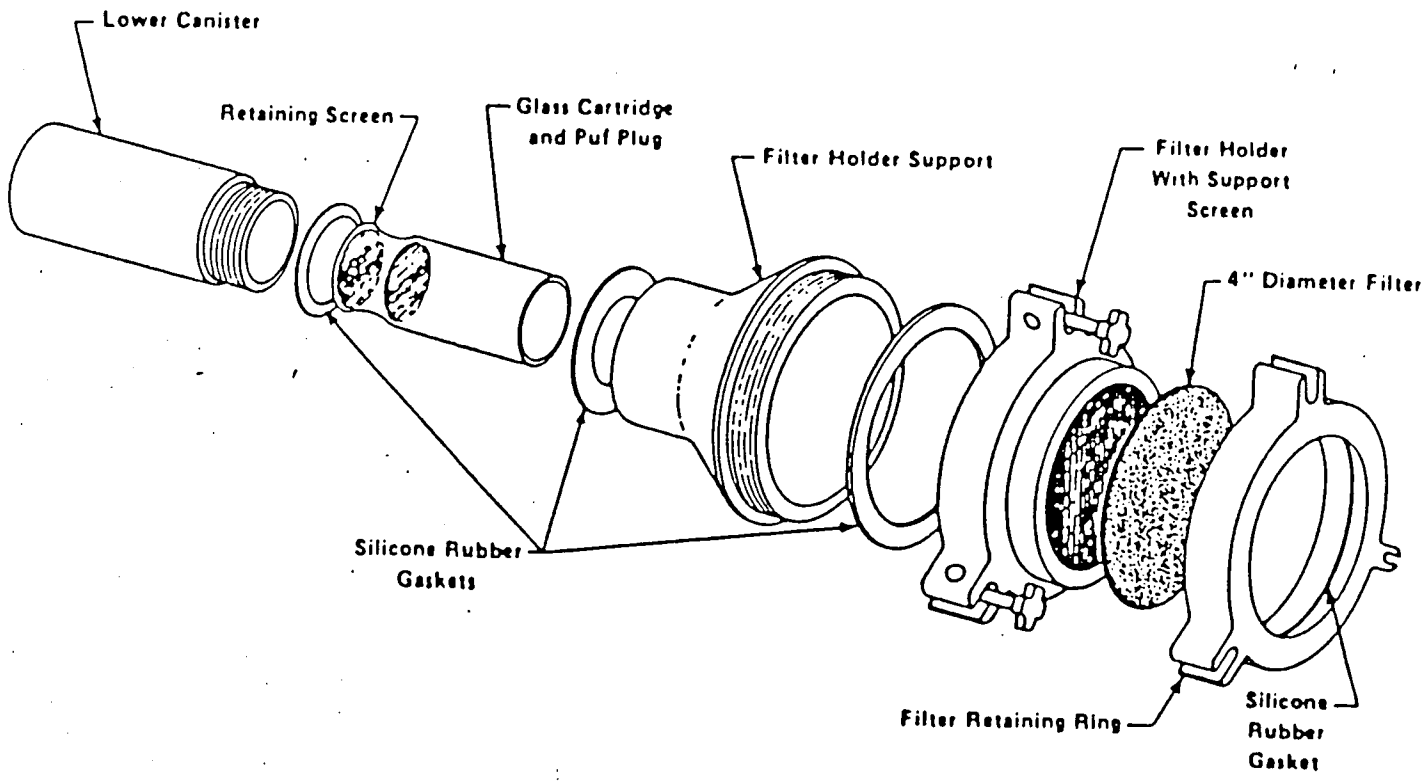

PUF (SVOC) SAMPLING MODULE

FIGURE 9

TABLE II

TARGET COMPOUND LIST FOR NAVFAC STUDY

I. Volatiles

TCE
Tetrachloroethylene (PCE)
Vinyl Chloride
Benzene
DCM (methylene chloride)

II. Semi-Volatiles

- *PAH's*
  - -Benzo(a)Pyrene
  - -Benzo(a)Anthracene
  - -Benzo(b)Fluoroanthene
  - -Benzo(j)Fluoroanthene
  - -Benzo(k)Fluoroanthene
  - -Benzo(g,h,i)Perylene
  - -Indeno(1,2,3-cd)Pyrene
  - -Bis(2-ethylhexyl)Phthalate
  - -Benzo(e)Pyrene
  - -Cyclopentadieno(c,d)Pyrene
  - -Dibenz(a,h)Anthracene
  - -Pyrene
  - -Chrysene
  - -Nitrosodiphenylamine

- *Pesticides/PCB's - DDD*
  - -DDE
  - -DDT
  - -PCBs

III. Metals (Heavy)

As	Cr	Sb
Ba	Hg	
Be	Ni	
Cd	Pb	

IV. PM_{10} (Inhalable Particulates)
TSP - Total Suspended Particulates

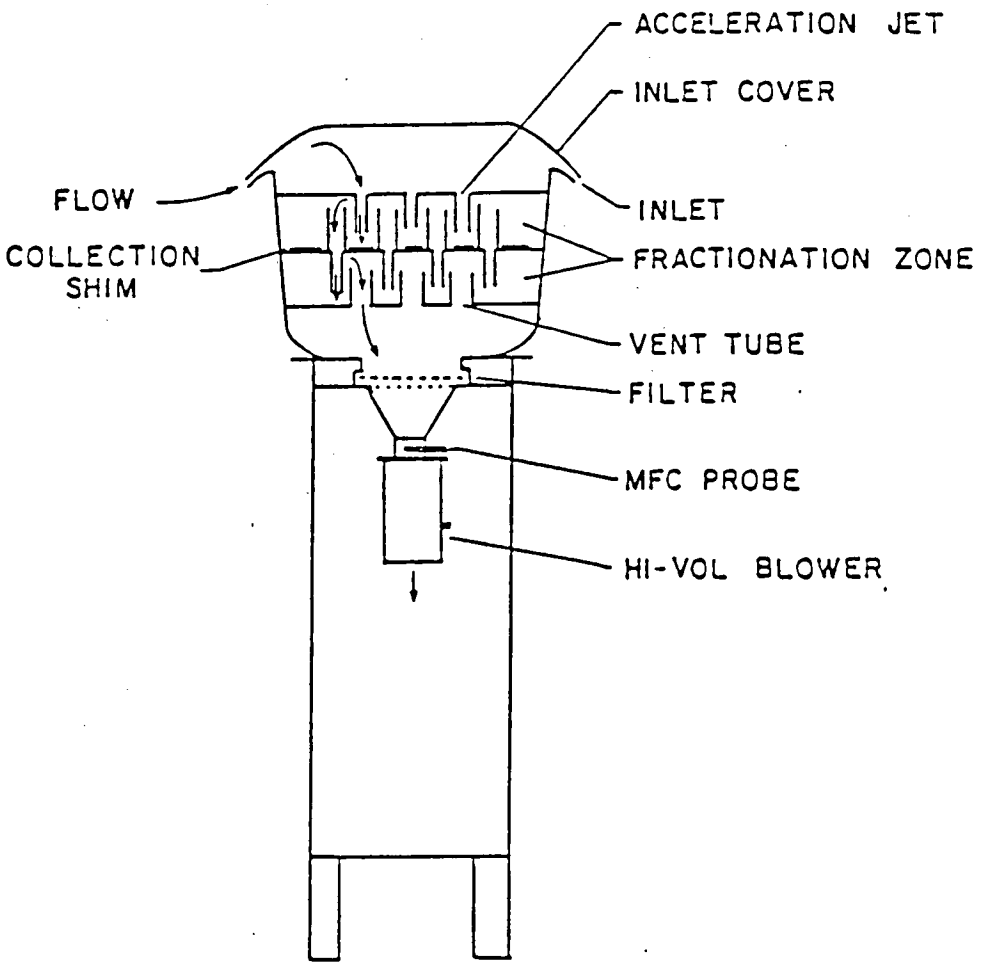

PM10 SAMPLER WITH MASS FLOW CONTROLLER

FIGURE 10

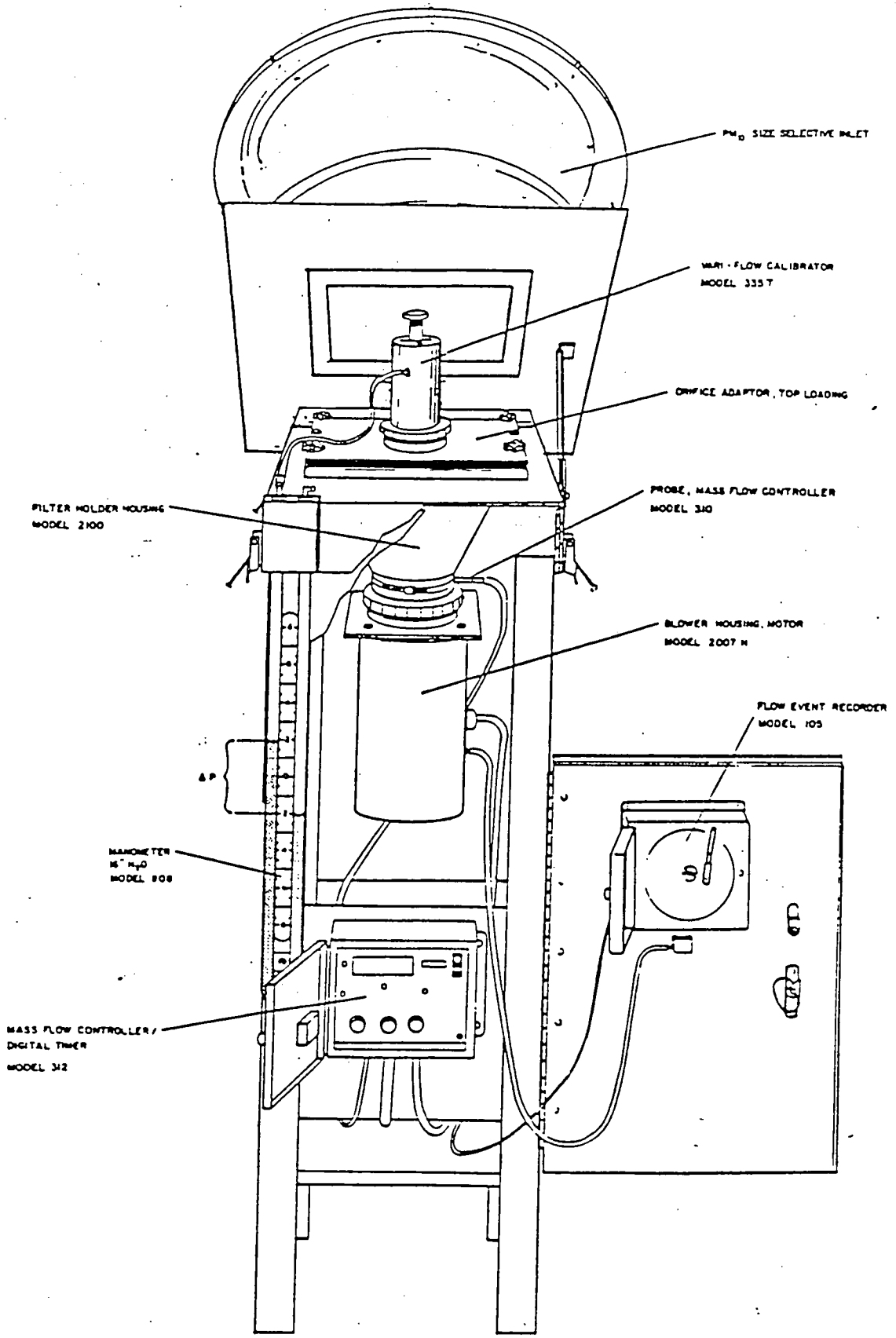

PM10 SAMPLER CALIBRATION SET-UP

FIGURE 11

TSP HI-VOL SAMPLER

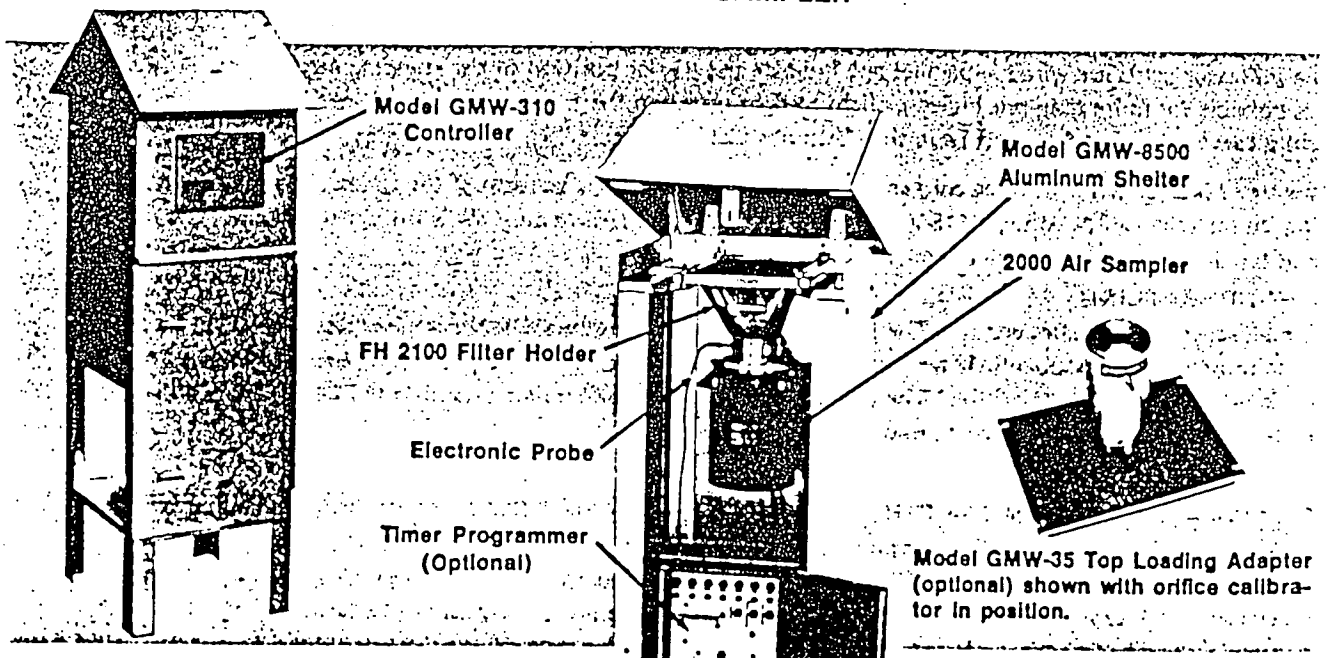

Specifications:

Motor HP — 0.6
Maximum Speed — 18,250 RPM
Amperage — 6.25
Wattage — 745
Adjustable Flow Range — 20 SCFM to 60 SCFM

Flow Control Accuracy — ± 1 SCFM, —20°C to +55°C
Power Source — 115V, 1 phase, 60 Hertz

Net Weight — 50 lbs.

Complies with Federal Register Vol. 36,
No. 84 dated April 30, 1971

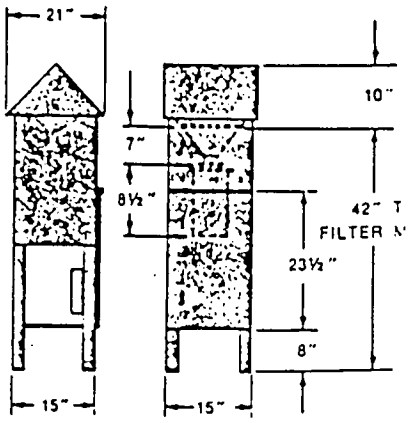

FIGURE 12

TABLE III

A SUMMARY OF KEY USEPA PROBE SITING CRITERIA FOR AIR MONITORING STATIONS

Factor	Criteria
Vertical spacing above ground	• Representative of the breathing zone and avoiding effects of obstruction, obstacles, and roadway traffic. Height of probe intake above ground, in general, 2-3 m above ground and 2-15 m above ground in the case of nearby roadways.
	• About 1 m or more above the structure where the sampler is located.
Horizontal spacing from obstruction and obstacles	• Minimum horizontal separation from obstruction such such as trees is >20 m from the dripline and 10 m from the dripline when the trees act as an obstruction.
	• Distance from sampler inlet to an obstacle such as a building must be at least twice the height the obstacle protrudes above the sampler.
	• If a sampler is located on a roof or other structures, there must be a minimum of 2 m separation from walls, parapets, penthouses, etc.
	• There must be sufficient separation between the sampler and a furnace or incinerator flue. The separation distance depends on the height and the nature of the emissions involved.
Unrestricted air flow	• Unrestricted air flow must exist in an arc of at least 270 degrees around the sampler, and the predominant wind direction for the monitoring period must be included in the 270 degree arc.
Spacing from roads	• A sufficient separation must exist between the sampler and nearby roadways to avoid the effect of dust re-entrainment and vehicular emissions on the measured air concentrations.
	• Sampler should be placed at a distance of 5-25 m from the edge of the nearest traffic lane on the roadway depending on the vertical placement of the sampler inlet which could be 2-15 m above ground.

SOURCE: *Air/Superfund National Technical Guidance Study Series, Volume 4, Procedures for Dispersion Modeling and Air Monitoring for Superfund Air Pathway Analysis.*

APPENDIX C

APPENDIX C

SUPPLEMENTAL DOCUMENTS

Document	Description
HASP II	McLaren/Hart Health and Safety Plan
	Research Triangle Laboratories--Certification of VOC Samplers

RESEARCH
TRIANGLE
LABORATORIES

October 10, 1991

Mr. Tim O'Rourke
Mr. Will Smith
Upstate Laboratories
143 Midler Park Drive
Syracuse, NY 13206

Dear Sirs:

This communication serves to notify you that ninety-two (92) summa canisters and eight (8) XonTech VOCCS units were certified clean by Research Triangle Laboratories. Ten (10) summa canisters received TO14 certification in which target analytes were not found above 0.5 to 1.5 ppb. Eighty-two (82) summa canisters and eight (8) XonTech units were certified TO12 where target analytes were not found above 20 ppb. Accept this letter as official confirmation on our part. If you have any questions, please call me.

Sincerely,

RESEARCH TRIANGLE LABORATORIES

Christopher Cunanan

Christopher Cunanan
Sales/Marketing Manager

CGC:mcg

1612 Carpenter Fletcher Road • Durham, North Carolina 27713 • (919) 544-5775 • FAX: (919) 544-3770
A Member of the Andersen Technology Group

HASP II (Short Form)

McLaren/Hart
HEALTHAND SAFETY PLAN

CLIENT: United States Navy
Naval Facilites Engineering Command

SITE NAME: Portsmouth Naval Shipyard

PROJECT/TASK ID#: AL005-09 (Ambient Air Monitoring)

SITE ADDRESS: Portsmouth Naval Shipyard
Kittery, Maine

PROJECTED MOBILIZATIONDATE: 9-91
***PLAN EXPIRATIONDATE:** 12-91

HASP APPROVALS:

	Name	Signature	Date
PROJECT MANAGER	Steve Urschel	S.F. Urschel	9/23/9
IH REVIEW	Steve Karpinski	[illegible]	9-23-91
FIELD SUPERVISOR/ SITE SAFETY OFFICER	Steve Karpinski	[illegible]	9-23-91
MANAGER INDUSTRIAL HYGIENE,HEALTH AND SAFETY	John Reinemann	J Reinemann	9/23/91

***PLAN EXPIRATIONDATE:**

- **Plan expiration date will be 3 months after the approval date.**
- **If this Plan is required to be used after the expiration date, then a Health and Safety review is necessary.**

HEALTHAND SAFETY PLAN

DISCLAIMER

This site Health and Safety Plan has been written for the use of McLaren/Hart and its employees. It may also be used as a guidance document by properly trained and experienced McLaren/Hart subcontractors. However, McLaren/Hart does not guarantee the health or safety of any person entering this site.

Due to the potentially hazardous nature of this site and the activity occurring thereon, it is not possible to discover, evaluate, and provide protection for all possible hazards which may be encountered. Strict adherence to the health and safety guidelines set forth herein will reduce, but not eliminate, the potential for injury at this site. The health and safety guidelines in this plan were prepared specifically for this site and should not be used on any other site without prior research by trained health and safety specialists.

McLaren/Hart claims no responsibility for use of the plan by others. The Plan is written for the specific site conditions, purpose, dates, and personnel specified and must be amended if these conditions change.

TABLE OF CONTENTS

SECTION 1.0 GENERAL INFORMATION 1
Introduction, Site Personnel

SECTION 2.0 PROJECT INFORMATION 3
Site Description, Purpose, Tasks

SECTION 3.0 HEALTH AND SAFETY HAZARD ANALYSIS 7
Hazard Analysis, Chemical and Physical Hazards

SECTION 4.0 HEALTH AND SAFETY FIELD IMPLEMENTATION 18
Site Delineation, Site Zones, PPE, Monitoring, Decon

SECTION 5.0 SITE OPERATING PROCEDURES 23
Initial, Daily, Personnel

SECTION 6.0 EMERGENCY RESPONSE PLAN 25
Incident, Injury, Emergency Numbers

LIST OF TABLES

TABLE 3-1 Assessment of Non-Chemical Hazards 8
TABLE 3-2 Known and/or Probable Contaminants 9
TABLE 3-3 Assessment of Chemical Hazards 10
TABLE 4-1 Personal Protective Equipment (PPE) Requirements 19
TABLE 4-2 Monitoring Protocols and Contaminant Action Levels 21

LIST OF ATTACHMENTS

ATTACHMENT 1 Personnel Responsibilities and Qualifications
ATTACHMENT 2 Site Maps(s)
ATTACHMENT 3 Utility Clearance Check and Map Identifying Utilities
ATTACHMENT 4 Tailgate Safety Meeting Form
ATTACHMENT 5 Excavation Operations
ATTACHMENT 6 Contractor Safety
ATTACHMENT 7 Personal Protective Equipment
ATTACHMENT 8 Hearing Conservation
ATTACHMENT 9 Accident Reporting and Investigation

SECTION 1.0

GENERAL INFORMATION

1.1 Introduction:

This site Health and Safety Plan (HASP) addresses those activities associated with the scope of work stated in the plan and will be implemented by the Site Safety Officer (SSO) during site work. Compliance with this HASP is required of all persons who enter this site. Assistance in implementing this plan can be obtained from the Site Safety Officer and Project Manager, Manager of Industrial Hygiene, Health and Safety (MIHHS), or the Regional Health and Safety Manager (RHSM). The content of this HASP may change or undergo revision based upon additional information made available to health and safety (H&S) personnel, monitoring results or changes in the scope of work. Any changes proposed must be reviewed by H&S staff and are subject to approval by the MIHHS or the RHSM and Project Manager.

1.2 Site Personnel:

Personnel authorized to enter the subject site while operations are being conducted must be approved by the SSO, MIHHS or RHSM. Authorization requires confirmation of conformance with OSHA 29 CFR 1910.120 training and medical examination requirements and/or other applicable regulations and review/sign-off of this HASP.

See Attachment 1 for Personnel Responsibilities and Qualifications.

FIELD SUPERVISOR/ SITE SAFETY OFFICER	Steve Karpinski Name	518-869-6192 Telephone No.
SUBCONTRACTOR(S)	Upstate Laboratories, Inc. Name	315-437-0255 Telephone No.
	Name	Telephone No.

1.3 Additional Authorized Site Personnel

Personnel authorized to enter the Portsmouth Naval Shipyard site while operations are being conducted must be approved by the Manager of Industrial Hygiene, Health and Safety (MIHHS), Regional Health and Safety Manager (RHSM) or, the Site Safety Officer (SSO). Authorization will involve completion of appropriate training courses and medical examination requirements as required by OSHA 29 CFR 1910.120 and/or other applicable regulations and review and sign-off of this HASP. All personnel must utilize the buddy system or trained escort, and check in with the Field Supervisor at the Command Post.

Additional McLaren/Hart Personnel Authorized to Perform Work On-site (not previously listed in Section 1.2):

Name	Training*	MIHHS/SSO Initials
1.		
2.		
3.		
4.		
5.		
6.		
7.		
8.		
9.		
10.		
11.		
12.		

* Hazardous Waste Training 40-hour OSHA 29 CFR 1910.120 and/or 8-hour update

SECTION 2.0

PROJECT INFORMATION

2.1 Site Description (include unusual site features; current site status; historical uses):

The Portsmouth Naval Shipyard is composed of four islands located in the Piscataqua River within the town limits of Kittery, Maine. The Piscataqua River is a tidal estuary which forms the boundary between New Hampshire and Maine.

The shipyard is engaged in the conversion, overhaul, and repair of submarines for the U.S. Navy. The shipyard has a long history dating back to 1690 when the first warship launched in North America, the **Falkland**, was built. The Portsmouth Naval Shipyard was first established as a government facility in 1800. The shipyard served as a repair and building facility for ships during the Civil War. The first government-built submarine was designed and built at the shipyard during World War I and a large number of submarines were designed and constructed at the yard from 1917 to the present. The shipyard has continued servicing submarines to this day.

The shipyard is now composed of 376 buildings on 278 acres of land. As the workload at the shipyard expanded, fill material was used to create made-land adjacent to the original islands. Today, continuous land surface extends between three of the original four islands and much of the facility is built on filloverlying former tidal flats. Figure 1 (Attachment 2) shows the present day site layout.

Sampling recently conducted around the Shipyard has revealed contaminated soils, groundwater and sediment on and around portions of the island. The Jamaica Island Landfill (SWMU #8) soil investigation revealed slightly to significantly elevated levels of certain EPA Appendix IX volatile and semi-volatile compounds, polychlorinated biphenyls (PCBs) and heavy metals including zinc, silver, copper, lead, mercury, nickel, antimony, arsenic, total chrome, barium, cadmium and beryllium. The groundwater at the JILF yielded slightly to significantly elevated levels of lead, mercury, barium, total chromium, arsenic and several pesticides.

The Mercury Burial Site (SWMU #9) yielded slightly, or significantly elevated levels of arsenic, barium, cadmium, total chromium, lead, nickel, PCBs and pesticides in surrounding groundwater.

The DRMO (SWMU #6) areas soil sampling has indicated slightly elevated or significatnly elevated concentrations of lead, cadmium, copper, arsenic, zinc, total chromium, selenium, barium, mercury, antimony and PCBs. Groundwater in the area has shown slightly elevated to significantly elevated levels of arsenic, barium, cadmium, total chromium and lead.

SWMU #27, the Fueld Oil Spillage Area has areas of elevated total petroleum hydrocarbons in the soils.

Surface soil sampling around the Day Care Center has indicated slightly to significantly elevated levels of lead and certain Appendix IX volatile organic compounds.

Freshwater pond sediment sampling revealed slightly to significantly elevated levels of zinc, arsenic, cadmium, lead, nickel and Appendix IX volatile and base-neutral organic compounds. Figure 3 locates these sample locations.

2.2 Purpose of Site Work:

This Resource Conservation and Recovery Act (RCRA) Facility Investigation (RFI) for the Portsmouth Naval Shipyard, Kittery, Maine, has been undertaken in response to the Hazardous and Solid Waste Amendments of 1984 (HSWA) Permit issued by the United States Environmental Protection Agency (USEPA). The permit was prepared after a RCRA Facility Assessment (RFA) of the Shipyard was conducted by the USEPA at the facility. The RFA identified specific Solid Waste Management Units (SWMUs) where known or potential releases of hazardous wastes or hazardous constituents have occurred. The final HSWA permit specifies plans and investigations to be carried out by the Shipyard to determine the extent and nature of the releases and to identify cleanup measures.

The primary objective of the RFI is to assess the potential releases of hazardous substances from thirteen SWMUs identified in the HSWA permit. If hazardous substances are identified in soil, sediment, surface water or groundwater, it will be necessary to assess the risk imposed to human health or the environment. Additionally, the RFI has been designed to describe the hydrogeologic setting related to the SWMUs in order to understand potential migration pathways. Allthis information willbe incorporated to support analysis of the feasible corrective measures, as necessary or appropriate, for each SWMU.

In conjunction with the soils, sediment, surface and groundwater monitoring portion of Phase IV of the RFI, an intensive ambient air monitoring program will be initiated to provide data to support the Human Health Risk Assessment. Ambient air monitoring willinclude both ambient air sampling and meteorological monitoring around SWMUs at the PNS. A total of eight (8) sites are being monitored for the following air contaminants: volatile organic compounds (six sites), semi-volatile organic compounds (eight sites), respirable and total suspended particulates (eight sites), heavy metals (eight sites) and polynuclear aromatic hydrocarbons, nitrogen compounds and phthalates (eight sites). Five (5) air monitoring sites willbe lcoated on, or adjacent to the JILF; two (2) sites willbe located on, or adjacent to the DRMO; and one (1) site willserve to organic background data and willbe a mobile site.

2.3 Scope of Work (by task in order of execution):

TASK

1. JILF AND MERCURY BURIAL

   1-A Surface Soil Sampling
   1-B Leachate Sampling
   1-C Outfall Sediment Sampling
   1-D Excavations and Soil Sampling
   1-E Borings/Wells Drillingand Installation
   1-F Well Development
   1-G Well Sampling
   1-H Water Levels Measurements
   1-I Hydraulic Tests
   1-J Tidal Guage Installation and Monitoring
   1-K Soil Gas Survey
   1-L Magnetometry Survey
   1-M GPR Survey
   1-N Seismic Survey
   1-O Soil Gas Extraction Tests
   1-P Surveying
   1-Q Drum Sampling of Development Water, Cuttings, Buried Waste
   1-R Air Monitoring (plus Background Location)
   1-S Background Sampling of Soil, Surface Water and Groundwater

2. DRMO (includes quarters S&M)

   2-A Surface Soil Sampling
   2-B Test Pits Soil Sampling
   2-C Borings/Well Drillingand Installation
   2-D Well Development
   2-E Well Sampling
   2-F Water Level Measurements
   2-G Hydraulic Tests
   2-H Air Monitoring (to be conducted simultaneously with Task 1-R)

- 3. PIPELINE

   3-A Assessment Walk
   3-B Soil Sampling
   3-C Borings/Wells Drillingand Installation
   3-D Well Development
   3-E Outfall Water Sampling
   3-F Well Sampling

4. DAY CARE CENTER/FUTURE DAY CARE CENTER

   4-A Surface Soil Sampling

5. FRESH WATER PONDS

5-A Discharge Inventory Walk
5-B Sediment Sampling

6. TANKS WMUs

6-A Soil Sampling
6-B Tank Contents Sampling

SECTION 3.0

HEALTH AND SAFETY HAZARD ANALYSIS

3.1 Hazard Analysis:

Non-chemical hazards are associated with:

1. Excavation for Meteorological Tower Foundation - Inadequate Shoring, Unstable Surfaces, Uneven Terrain, Steep Grades, Trenches
2. All Activities - Insect Bites, Stings, Poison Ivy, Uneven Terrain, Steep Grades
3. Machinery such as Excavation Equipment - Moving Mechnical Parts
4. Electric Shock from Ambient Air Monitoring Equipment
5. Trip and Fall Hazards Associated with Ambient Air Monitoring Platform

Chemical hazards are associated with:

1. Ambient Air Monitoring (Chemical Reagents)

The overall hazard is:

__X__ Low

____ Moderate

____ High

3.2 Non-Chemical Hazard Summary:

See Table 3-1 for summary assessment of non-chemical hazards.

3.3 Site Contaminant Source(s) and Data:

See Table 3-2 for list of known/probable contaminants and/or applicable analytical data reports.

3.4 Chemical Hazard Summary:

See Table 3-3 for summary assessment of chemical hazards.

TABLE 3-1

ASSESSMENT OF NON-CHEMICAL HAZARDS

Non-Chemical Hazard	Yes	No	Task No.(s)	Non-Chemical Hazard	Yes	No	Task No.(s)
1. Electrical (overhead lines)	X		1-R, 2-H	16. Shoring		X	
2. Electrical (underground lines)	X		1-R, 2-H	17. Scaffolding (Platform)	X		1-R, 2-H
3. Gas/Water lines	X		1-R, 2-H	18. Biologic		X	
4. Drilling Equipment		X		19. Holes/Ditches	X		1-R, 2-H
5. Excavation Equipment	X		1-R, 2-H	20. Steep Grades	X		1-R, 2-H
6. Machinery	X		1-R, 2-H	21. Slippery Surfaces	X		1-R, 2-H
7. Heat Exposure		X		22. Uneven Terrain	X		1-R, 2-H
8. Cold Exposure		X		23. Unstable Surfaces	X		1-R, 2-H
9. Oxygen Deficiency		X		24. Elevated Surfaces	X		1-R, 2-H
10. Confined Spaces		X		25. Lighting	X		1-R, 2-H
11. Noise	X		1-R, 2-H (Hi-vols)	26.			
12. Ionizing Radiation		X		27.			
13. Non-ionizing Radiation		X		28.			
14. Fire		X		29.			
15. Explosive Atmospheres		X		30.			

TABLE 3-2

KNOWN AND/OR PROBABLE CONTAMINANTS*

Contaminant	Source of Contamination	Sample Location	Sample Type	Concentration Range Expected
VOLATILE ORGANIC COMPOUNDS	Air emission sources and possibly buried waste	Background and JILF Sites	Ambient Air	≤100 PPB
SEMI-VOLATILE ORGANIC COMPOUNDS (PESTICIDES, PCBs, PAHs, PHTHALATES & CERTAIN NITROSOAMINES)	Air emission sources and possibly buried waste and herbicide application	Background and Jilf, Mercury Burial Sites, DRMO	Ambient Air	≤100 ug/M^3
HEAVY METALS, PM_{10}, AND TSP	Air emission sources and possibly DRMO operation or buried waste	Day Care Center, JILF, DRMO, Fresh Water Ponds, Mercury Burial Sites	Ambient Air	≤ 100 ug/M^3

* Source of data:
Date of sampling:

TABLE 3-3 (CONTINUED)

ASSESSMENT OF CHEMICAL HAZARDS[dd]

Task No.(s)	Chemical Name[aa] (or class)	PEL/TLV[a,a]	Other Pertinent Limits[aa] (Specify)	Potential Exposure Pathways	Acute Health Effects	Chronic Health Effects
1-R, 2-H	Vinyl Chloride	1 ppm TWA	5 ppm M&H REL	Inhalation	Intoxication, drowsiness, abdominal pain, numbness in fingers and toes, coughing, sneezing	Liver, CNS, blood, respiratory system damage
1-R, 2-H	Benzene	1 ppm TWA	5 ppm STEL	Skin Contact, inhalation	Dizziness, nausea, headache, fatigue	Leukemia
1-R, 2-H	Toluene	100 ppm TLV	150 ppm STEL	Skin Contact, inhalation, eye contact	Irritation of eyes, nose, skin, headache, nausea, dizziness	Kidney and liver damage
1-R, 2-H	Xylene	0.2 mg/m^3 TWA	150 ppm STEL, 1,000 ppm IDLH	Inhalation, ingestion, skin contact	Nose, throat irritation, headache, dizziness, nausea, lightheadness	Liver and kidney damage, intestional tract disturbance CNS depression

a
PEL = OSHA Permissible Exposure Limit; represents the maximum allowable 8-hr. time weighted average (TWA) exposure concentration.
TLV = ACGIH Threshold Limit Value; represents the maximum recommended 8-hr. TWA exposure concentration.
Exc = Cal-OSHA Excursion Limit; represents the maximum exposure concentration allowed for a specified excursion duration provided the PEL and Ceiling limits are not exceeded.
STEL = ACGIH or OSHA Short-term Exposure Limit; represents the maximum allowable 15 minute TWA exposure concentration.
Ceiling = OSHA and Cal-OSHA Ceiling Limit; represents the maximum exposure concentration above which an employee shall not be exposed during any period without respiratory protection.
LEL = Lower Explosive Limit; represents the minimum concentration of combustible vapor in air that will ignite, if an ignition source is present (expressed in % by volume).
IDLH = Immediately Dangerous to Life and Health; represents the concentration at which one could be exposed for 30 minutes without experiencing escape-impairing or irreversible health effects.
TPH = Total Petroleum Hydrocarbons
VOC = Volatile Organic Compounds
NIOSH REL = National Institute for Occupational Safety & Health Recommended Exposure Limits

* Mineral Oil Mist PEL (No PEL for Fuel Oil)
b PNAs = Pyrene, phenanthrene,' fluoranthene, chrysene, fluorene, indeno (1,2,3-cd)pyrene, benzo(a)anthracene, anthracene, benzo(b)fluoranthene, benzo(k)fluoranthene, benzo(a)pyrene, benzo(g,h,i)perylene, 2-methylnaphthalene, acenaphthene, indeno(1,2,3-cd)pyrenene, 3,3-dimethylbenzidene, dibenzofuran
c NIOSH = Recommended limit for chrysene
d HAZARDS = Based on soil and groundwater analyses

TABLE 3-3

ASSESSMENT OF CHEMICAL HAZARDS[d]

Task No.(s)	Chemical Name[aa] (or class)	PEL/TLV[a]	Other Pertinent Limits[aa] (Specify)	Potential Exposure Pathways	Acute Health Effects	Chronic Health Effects
1-R, 2-H	Acetone	750 ppm TWA	250 ppm NIOSH REL 10,000 ppm IDLH	Inhalation; Ingestion, Skin and/or eye contact	Irritation of eyes, nose, throat. Nausea, vomiting, dry skin, irritation eye irritation	Respiratory System, Skin
1-R, 2-H	Ethyl Benzene	100 ppm TWA	125 ppm STEL 2,000 ppm IDLH	Inhalation; ingestion, skin and/or eye contact	Irritation of nose and throat, dizziness, diff. breathing, skin and eye irritation, Cardiac disturbance, bronchitus	Irritation upper respiratory system, skin, eyes, CNS effects
1-R, 2-H	Trichloroethy-lene	50 ppm TWA	200 ppm STEL	Ingestion, inhalation, skin/eye contact	Headache, vertigo, vison disturbance, tremors, nausea, eye irritation, dermatitis	Respiratory system, heart, CNS, liver, kidney
1-R, 2-H	Tetrachloro-ethylene	25 ppm TWA		Ingestion, inhalation, skin/eye contact	Irritation of skin, eyes, upper respiratory tract, CNS effects	CNS effects

a
PEL = OSHA Permissible Exposure Limit; represents the maximum allowable 8-hr. time weighted average (TWA) exposure concentration.
TLV = ACGIH Threshold Limit Value; represents the maximum recommended 8-hr. TWA exposure concentration.
Exc = Cal-OSHA Excursion Limit; represents the maximum exposure concentration allowed for a specified excursion duration provided the PEL and Ceiling limits are not exceeded.
STEL = ACGIH or OSHA Short-term Exposure Limit; represents the maximum allowable 15 minute TWA exposure concentration.
Ceiling = OSHA and Cal-OSHA Ceiling Limit; represents the maximum exposure concentration above which an employee shall not be exposed during any period without respiratory protection.
LEL = Lower Explosive Limit; represents the minimum concentration of combustible vapor in air that will ignite, if an ignition source is present (expressed in % by volume).
IDLH = Immediately Dangerous to Life and Health; represents the concentration at which one could be exposed for 30 minutes without experiencing escape-impairing or irreversible health effects.
TPH = Total Petroleum Hydrocarbons
VOC = Volatile Organic Compounds
NIOSH REL = National Institute for Occupational Safety & Health Recommended Exposure Limits

* Mineral Oil Mist PEL (No PEL for Fuel Oil)
b PNAs = Pyrene, phenanthrene, fluoranthene, chrysene, fluorene, indeno (1,2,3-cd)pyrene, benzo(a)anthracene, anthracene, benzo(b)fluoranthene, benzo(k)fluoranthene, benzo(a)pyrene, benzo(g,h,i)perylene, 2-methylnaphthalene, acenaphthene, indeno(1,2,3-cd)pyrenene, 3,3-dimethylbenzidene, dibenzofuran
c NIOSH = Recommended limit for chrysene
d HAZARDS = Based on soil and groundwater analyses

TABLE 3-3 (CONTINUED)

ASSESSMENT OF CHEMICAL HAZARDS[dd]

Task No.(s)	Chemical Name[aa] (or class)	PEL/TLV[a,a]	Other Pertinent Limits[aa] (Specify)	Potential Exposure Pathways	Acute Health Effects	Chronic Health Effects
1-R, 2-H	Polynuclear[b] Aromatic Compounds	0.2 mg/m^3 TWA	0.1 mg/m^3[c] TWA, NIOSH, REL	Inhalation, ingestion, skin contact	Nausea and respiratory tract irritation dermal irritation	Suspected human carcinogen
1-R, 2-H	Bis(2-chlroe-ethyl)ether	5 ppm TWA				
1-R, 2-H	Bis(2-Ethylhexyl)phthalate	5 mg/m^3 TWA	10 mg/m^3 STEL	Eye Contact, ingestion, skin contact	Irritation sof eyes, skin, abdominal cramps, nausea	
1-R, 2-H	Aroclor - 1242, 1260, 1254	0.5 mg/m^3 TWA		Skin/eye contact, inhalation (mist), ingestion	Irritating to nose, eyes and throat if misted	Chloracne

a
PEL = OSHA Permissible Exposure Limit; represents the maximum allowable 8-hr. time weighted average (TWA) exposure concentration.
TLV = ACGIH Threshold Limit Value; represents the maximum recommended 8-hr. TWA exposure concentration.
Exc = Cal-OSHA Excursion Limit; represents the maximum exposure concentration allowed for a specified excursion duration provided the PEL and Ceiling limits are not exceeded.
STEL = ACGIH or OSHA Short-term Exposure Limit; represents the maximum allowable 15 minute TWA exposure concentration.
Ceiling = OSHA and Cal-OSHA Ceiling Limit; represents the maximum exposure concentration above which an employee shall not be exposed during any period without respiratory protection.
LEL = Lower Explosive Limit; represents the minimum concentration of combustible vapor in air that will ignite, if an ignition source is present (expressed in % by volume).
IDLH = Immediately Dangerous to Life and Health; represents the concentration at which one could be exposed for 30 minutes without experiencing escape-impairing or irreversible health effects.
TPH = Total Petroleum Hydrocarbons
VOC = Volatile Organic Compounds
NIOSH REL = National Institute for Occupational Safety & Health Recommended Exposure Limits

a Mineral Oil Mist PEL (No PEL for Fuel Oil)
b PNAs = Pyrene, phenanthrene, fluoranthene, chrysene, fluorene, indeno (1,2,3-od)pyrene, benzo(a)anthracene, anthracene, benzo(b)fluoranthene, benzo(k)fluoranthene, benzo(a)pyrene, benzo(g,h,i)perylene, 2-methylnaphthalene, acenaphthene, indeno(1,2,3-od)pyrenene, 3,3-dimethylbenzidene, dibenzofuran
c NIOSH = Recommended limit for chrysene
d HAZARDS = Based on soil and groundwater analyses

TABLE 3-3 (CONTINUED)

ASSESSMENT OF CHEMICAL HAZARDS[d]

Task No.(s)	Chemical Name[aa] (or class)	PEL/TLV[a,a]	Other Pertinent Limits[aa] (Specify)	Potential Exposure Pathways	Acute Health Effects	Chronic Health Effects
1-R, 2-H	Antimony	0.5 mg/m^3 TWA	80 mg/m^3, IDLH	Inhalation, ingestion	Vomiting, diarrhea, slow pulse and low blood pressure, shallow breathing, death	Chemical penumonia, liver and cardiac problems, kidney disease
1-R, 2-H	Arsenic	0.2 mg/m^3 TWA	0.01 mg/m^3 inorganic compounds	Inhalation, ingestion of dust, skin absorption	Nasal irritation, dust, pain, inflamation of mouth, nausea, vomitting, abdominal pain, cardiovascular	Weight loss, hair loss, nausea, leukemia, bone marrow depression, liver damage
1-R, 2-H	Barium	0.5 mg/m^3 TWA		Inhalation of dust, ingestion, skin/eye contact	Gstroenteritis, slow pulse rate, muscle spasms, coughing, bronchial irritation	None reported
1-R, 2-H	Beryllium	0.002 mg/m^3 TWA	0.025 mg/m^3 STEL	Inhalation, eye contact, ingestion	Cough, fever, irritation or eyes, nose and throat	Lung disease, cough, chest pain, shortness of breath, weight loss

a
PEL = OSHA Permissible Exposure Limit; represents the maximum allowable 8-hr. time weighted average (TWA) exposure concentration.
TLV = ACGIH Threshold Limit Value; represents the maximum recommended 8-hr. TWA exposure concentration.
Exc = Cal-OSHA Excursion Limit; represents the maximum exposure concentration allowed for a specified excursion duration provided the PEL and Ceiling limits are not exceeded.
STEL = ACGIH or OSHA Short-term Exposure Limit; represents the maximum allowable 15 minute TWA exposure concentration.
Ceiling = OSHA and Cal-OSHA Ceiling Limit; represents the maximum exposure concentration above which an employee shall not be exposed during any period without respiratory protection.
LEL = Lower Explosive Limit; represents the minimum concentration of combustible vapor in air that will ignite, if an ignition source is present (expressed in % by volume).
IDLH = Immediately Dangerous to Life and Health; represents the concentration at which one could be exposed for 30 minutes without experiencing escape-impairing or irreversible health effects.
TPH = Total Petroleum Hydrocarbons
VOC = Volatile Organic Compounds
NIOSH REL = National Institute for Occupational Safety & Health Recommended Exposure Limits

aa Mineral Oil Mist PEL (No PEL for Fuel Oil)
b PNAs = Pyrene, phenanthrene, fluoranthene, chrysene, fluorene, indeno (1,2,3-cd)pyrene, benzo(a)anthracene, anthracene, benzo(b)fluoranthene, benzo(k)fluoranthene, benzo(a)pyrene, benzo(g,h,i)perylene, 2-methylnaphthalene, acenaphthene, indeno(1,2,3-cd)pyrene, 3,3-dimethylbenzidene, dibenzofuran
c NIOSH = Recommended limit for chrysene
d HAZARDS = Based on soil and groundwater analyses

TABLE 3-3 (CONTINUED)

ASSESSMENT OF CHEMICAL HAZARDS[d]

Task No.(s)	Chemical Name[aa] (or class)	PEL/TLV[a,a]	Other Pertinent Limits[aa] (Specify)	Potential Exposure Pathways	Acute Health Effects	Chronic Health Effects
1-R, 2-H	Cadmium	0.05 mg/m^3 TWA	0.2 mg/m^3 TWA (OSHA)	Inhalation, skin contact	Excess salination, dry burning throat, headache, coughing, nausea	Cadmium poisoning, nonhypertrophic emplyseama
1-R, 2-H	Chromium (Total)	0.5 mg/m^3 TWA		Inhalation, skin absorption, ingestion	Headache, coughing, shortness of breath, fever, nasal irritation	Asthmatic bronchitis
1-R, 2-H	Copper	1 mg/m^3 TWA		Inhalation	Irritation of upper respiratory tract, metal fame, fever	Lung X-ray abnormal with no harmful effects
1-R, 2-H	Lead	0.15 mg/m^3 TWA	0.05 mg/m^3 TWA (OSHA)	Inhalation, ingestion, skin/eye contact	Symptoms may not develop quickly and decrase physical fittness, fatigue, sleep disturbance, headache, abdominal pains	Anemia, pale skin, decreased hand-grip strength, abdominal pain, kidney damage

a
PEL = OSHA Permissible Exposure Limit; represents the maximum allowable 8-hr. time weighted average (TWA) exposure concentration.
TLV = ACGIH Threshold Limit Value; represents the maximum recommended 8-hr. TWA exposure concentration.
Exc = Cal-OSHA Excursion Limit; represents the maximum exposure concentration allowed for a specified excursion duration provided the PEL and Ceiling limits are not exceeded.
STEL = ACGIH or OSHA Short-term Exposure Limit; represents the maximum allowable 15 minute TWA exposure concentration.
Ceiling = OSHA and Cal-OSHA Ceiling Limit; represents the maximum exposure concentration above which an employee shall not be exposed during any period without respiratory protection.
LEL = Lower Explosive Limit; represents the minimum concentration of combustible vapor in air that will ignite, if an ignition source is present (expressed in % by volume).
IDLH = Immediately Dangerous to Life and Health; represents the concentration at which one could be exposed for 30 minutes without experiencing escape-impairing or irreversible health effects.
TPH = Total Petroleum Hydrocarbons
VOC = Volatile Organic Compounds
NIOSH REL = National Institute for Occupational Safety & Health Recommended Exposure Limits

b
Mineral Oil Mist PEL (No PEL for Fuel Oil)
PNAs = Pyrene, phenanthrene, fluoranthene, chrysene, fluorene, indeno (1,2,3-od)pyrene, benzo(a)anthracene, anthracene, benzo(b)fluoranthene, benzo(k)fluoranthene, benzo(a)pyrene, benzo(g,h,i)perylene, 2-methylnaphthalene, acenaphthene, indeno(1,2,3-od)pyrenene, 3,3-dimethylbenzidene, dibenzofuran

c
NIOSH = Recommended limit for chrysene

d
HAZARDS = Based on soil and groundwater analyses

TABLE 3-3 (CONTINUED)

ASSESSMENT OF CHEMICAL HAZARDS[d]

Task No.(s)	Chemical Name[aa] (or class)	PEL/TLV[a,a]	Other Pertinent Limits[aa] (Specify)	Potential Exposure Pathways	Acute Health Effects	Chronic Health Effects
1-R, 2-H	Mercury	0.05 mg/m^3 TWA		Skin absorption, inhalation	Erosion or respiratory tract/GI tract, nausea, vomitting blood, diarrhea, shock, headache, chest pain	Tremors, emotional problems, loss of concentration, depression, fatigue, kidney problems
1-R, 2-H	Nickel	1 mg/m^3 TWA		Inhalation, ingestion, skin/eye contact	Allergic asthma, dermobis, nasal cavities irritation	Nasal cavity irritation, lung problems
1-R, 2-H	Silver	0.1 mg/m^3 TWA	0.01 mg/m^3 TWA (OSHA)	Inhalation, absorption through sweat glands	Soluble silver compounds may be caustic	Argyria or blush pigmentation of skin and conjunctiva
1-R, 2-H	Zinc	10 mg/m^3 TWA	5 mg/m^3 TWA, respiration fraction	Inhalation, ingestion	Metal fume fever	No history of chronic effects

a
PEL = OSHA Permissible Exposure Limit; represents the maximum allowable 8-hr. time weighted average (TWA) exposure concentration.
TLV = ACGIH Threshold Limit Value; represents the maximum recommended 8-hr. TWA exposure concentration.
Exc = Cal-OSHA Excursion Limit; represents the maximum exposure concentration allowed for a specified excursion duration provided the PEL and Ceiling limits are not exceeded.
STEL = ACGIH or OSHA Short-term Exposure Limit; represents the maximum allowable 15 minute TWA exposure concentration.
Ceiling = OSHA and Cal-OSHA Ceiling Limit; represents the maximum exposure concentration above which an employee shall not be exposed during any period without respiratory protection.
LEL = Lower Explosive Limit; represents the minimum concentration of combustible vapor in air that will ignite, if an ignition source is present (expressed in % by volume).
IDLH = Immediately Dangerous to Life and Health; represents the concentration at which one could be exposed for 30 minutes without experiencing escape-impairing or irreversible health effects.
TPH = Total Petroleum Hydrocarbons
VOC = Volatile Organic Compounds
NIOSH REL = National Institute for Occupational Safety & Health Recommended Exposure Limits

* Mineral Oil Mist PEL (No PEL for Fuel Oil)
b PNAs = Pyrene, phenanthrene, fluoranthene, chrysene, fluorene, indeno (1,2,3-cd)pyrene, benzo(a)anthracene, anthracene, benzo(b)fluoranthene, benzo(k)fluoranthene, benzo(a)pyrene, benzo(g,h,i)perylene, 2-methylnaphthalene, acenaphthene, indeno(1,2,3-cd)pyrenene, 3,3-dimethylbenzidene, dibenzofuran
c NIOSH = Recommended limit for chrysene
d HAZARDS = Based on soil and groundwater analyses

TABLE 3-3 (CONTINUED)

ASSESSMENT OF CHEMICAL HAZARDS[d]

Task No.(s)	Chemical Name[aa] (or class)	PEL/TLV[a,a]	Other Pertinent Limits[aa] (Specify)	Potential Exposure Pathways	Acute Health Effects	Chronic Health Effects
1-R, 2-H	Bis(2-ethyl-hexyl)phthalate	N/A				
1-R, 2-H	#2 or #6 fuel oil	5 mg/m^3 TWA (as mineral oil mist)		Inhalation, skin/eye contact	Vapors irritating to respiratory passages, headache, dizziness, nausea, blocking of sebeaccous glands	None reported
1-R, 2-H	PM_{10}	5 mg/m^3 (respirable fraction)	50 ug/m^{3b}, 150 ug/m^{3c}	Inhalation	Respiratory system	Respiratory system
1-R, 2-H	TSP	15 mg/m^3 (Nuisance dust)		Inhalation	Respriatory system	Respiratory system

a
PEL = OSHA Permissible Exposure Limit; represents the maximum allowable 8-hr. time weighted average (TWA) exposure concentration.
TLV = ACGIH Threshold Limit Value; represents the maximum recommended 8-hr. TWA exposure concentration.
Exc = Cal-OSHA Excursion Limit; represents the maximum exposure concentration allowed for a specified excursion duration provided the PEL and Ceiling limits are not exceeded.
STEL = ACGIH or OSHA Short-term Exposure Limit; represents the maximum allowable 15 minute TWA exposure concentration.
Ceiling = OSHA and Cal-OSHA Ceiling Limit; represents the maximum exposure concentration above which an employee shall not be exposed during any period without respiratory protection.
LEL = Lower Explosive Limit; represents the minimum concentration of combustible vapor in air that will ignite, if an ignition source is present (expressed in % by volume).
IDLH = Immediately Dangerous to Life and Health; represents the concentration at which one could be exposed for 30 minutes without experiencing escape-impairing or irreversible health effects.
TPH = Total Petroleum Hydrocarbons
VOC = Volatile Organic Compounds
NIOSH REL = National Institute for Occupational Safety & Health Recommended Exposure Limits

aa Mineral Oil Mist PEL (No PEL for Fuel Oil)
b PNAs = Pyrene, phenanthrene, fluoranthene, chrysene, fluorene, indeno (1,2,3-cd)pyrene, benzo(a)anthracene, anthracene, benzo(b)fluoranthene, benzo(k)fluoranthene, benzo(a)pyrene, benzo(g,h,i)perylene, 2-methylnaphthalene, acenaphthene, indeno(1,2,3-cd)pyrenene, 3,3-dimethylbenzidene, dibenzofuran
c NIOSH = Recommended limit for chrysene
d HAZARDS = Based on soil and groundwater analyses

TABLE 3-3 (CONTINUED)

ASSESSMENT OF CHEMICAL HAZARDS[d]

Task No.(s)	Chemical Name[aa] (or class)	PEL/TLV[a a]	Other Pertinent Limits[aa] (Specify)	Potential Exposure Pathways	Acute Health Effects	Chronic Health Effects
1-R, 2-H	Pesticides (DDT)	1 mg/m^3		Inhalation, skin contact, ingestion	Severe irritability, convulsive seizures and comas	Dizziness, nausea, abdominal pain, vomitting, loss of weight and appetite

see me about why I didn't change b and c footers

a
- PEL = OSHA Permissible Exposure Limit; represents the maximum allowable 8-hr. time weighted average (TWA) exposure concentration.
- TLV = ACGIH Threshold Limit Value; represents the maximum recommended 8-hr. TWA exposure concentration.
- Exc = Cal-OSHA Excursion Limit; represents the maximum exposure concentration allowed for a specified excursion duration provided the PEL and Ceiling limits are not exceeded.
- STEL = ACGIH or OSHA Short-term Exposure Limit; represents the maximum allowable 15 minute TWA exposure concentration.
- Ceiling = OSHA and Cal-OSHA Ceiling Limit; represents the maximum exposure concentration above which an employee shall not be exposed during any period without respiratory protection.
- LEL = Lower Explosive Limit; represents the minimum concentration of combustible vapor in air that will ignite, if an ignition source is present (expressed in % by volume).
- IDLH = Immediately Dangerous to Life and Health; represents the concentration at which one could be exposed for 30 minutes without experiencing escape-impairing or irreversible health effects.
- TPH = Total Petroleum Hydrocarbons
- VOC = Volatile Organic Compounds
- NIOSH REL = National Institute for Occupational Safety & Health Recommended Exposure Limits

a Mineral Oil Mist PEL (No PEL for Fuel Oil)

b PNAs = Pyrene, phenanthrene, fluoranthene, chrysene, fluorene, indeno (1,2,3-cd)pyrene, benzo(a)anthracene, anthracene, benzo(b)fluoranthene, benzo(k)fluoranthene, benzo(a)pyrene, benzo(g,h,i)perylene, 2-methylnaphthalene, acenaphthene, indeno(1,2,3-cd)pyrenene, 3,3-dimethylbenzidene, dibenzofuran

c NIOSH = Recommended limit for chrysene

d HAZARDS = Based on soil and groundwater analyses

SECTION 4.0

HEALTH AND SAFETY FIELD IMPLEMENTATION

4.1 Personal Protective Equipment (PPE) Requirements:

PPE may be upgraded or downgraded by the site industrial hygienist, MIHHS, RHSM, or qualified Site Safety Officer based upon site conditions and air monitoring results. Reference to required PPE will be by Level of Protection (A-D). A summarized description of minimum required PPE by Level of Protection is indicated below:

LEVELA - Self-contained breathing apparatus (SCBA) or supplied air respirator (SAR) with escape SCBA; totally-encapsulating suit; chemical-resistant boots and gloves; two-way radio communications.

LEVELB - SCBA or SAR with escape SCBA; chemical-resistant suit, boots, gloves.

LEVELC - Air purifying respirator (half or full face); chemical resistant suit, boots, gloves

LEVELD - Coveralls; chemical-resistant, steel toe boots; safety glasses

See Table 4-1 for PPE requirements.

4.2 Monitoring Equipment Requirements:

Monitoring is conducted by the Site Safety Officer or designee. Conduct contaminant source monitoring initially. Complete breathing zone monitoring if source concentrations are near or above contaminant action level concentrations. Log direct reading monitoring every 15-30 minutes and record results on Direct Reading Report form. Calibrate monitoring instruments daily or in accordance with manufacturers' specifications. Record calibration data on the Instrument Calibration Log.

See Table 4-2 for monitoring protocols and contaminant action levels.

TABLE 4-1

PERSONAL PROTECTIVE EQUIPMENT (PPE) REQUIREMENTS

Task No.(s)	Level of Protection	Level if Upgrade	PPE[a] Suit	PPE[a] Gloves	PPE[a] Feet	PPE[a] Head	PPE[a] Eye	PPE[a] Ear	PPE[a] Respirator	Additional PPE[a] for Upgrade
1-R, 2-H	D	C	STD	L or NONE	Steel	None	Glass	Plugs with Hi-Vols	None	APR OV/HEPA

a Personal Protective Equipment (PPE):

SUIT:
Std = Standard work clothes
Tyvek = Uncoated Tyvek disposable coverall
PE Tyvek = Polyethylene-coated Tyvek
Saranex = Saranex-laminated Tyvek
PVC Suit = PVC raingear

GLOVES:
Work = Work gloves (canvas, leather)
Neo = Neoprene gloves
PVC = PVC gloves
N = Nitrile gloves
V = Vinyl gloves
L = Latex gloves

a Personal Protective Equipment (PPE):

FEET:
Steel = Steel-toe boots
Steel+ = Steel-toe PVC boots
Booties = PVC booties

HEAD:
HH = Hardhat

EYE:
Glasses = Safety glasses
Goggles = Goggles
Shield = Face shield

EAR:
Plugs = Earplugs
Muff = Ear muff

a Personal Protective Equipment (PPE):

RESPIRATOR:
APR = Air purifying respirator
Full APR = Full face APR
Half APR = Half face APR
SAR = Airline supplied air respirator
SCBA = Self contained breathing apparatus
Escape = Escape SCBA
OV = Organic Vapor cartridge
AG = Acid gas cartridge
OV/AG = Organic vapor/Acid gas cartridge
AM = Ammonia cartridge
Dust/mist = Dust/mist pre-filter and cover for cartridge
HEPA = High efficiency particulate air filter cartridge

OTHER:
* = Use if contact with wet soil or water
** = Optional use except if specific hazard present

TABLE 4-2

MONITORING PROTOCOLS AND CONTAMINANT ACTION LEVELS

					Breathing Zone Action Level Concentrations	
Task No.(s)	Location	Contaminant	Monitoring Equipment	Monitoring Protocol	Monitored Level* for Mandatory Respirator Use	Monitored Level for Mandatory Work Stoppages**
1-R, 2-H	Not applicable					

* Monitoring performed at operator's breathing zone.
** Call the Regional Environmental Health and Safety Coordinator for consultation.

PID = Photoionization Detector (HNU, TIP, OVM)
FID = Flame Ionization Detector (OVA)
LEL-O_2 = LEL and Oxygen Meter
CT = Colorimetric Gas Detector Tube

Q:005.alg

4.3 Site Zones/Delineation:

Exclusion Zone:

____ Areas within barricades, cones and/or caution tape
____ Within 40-ft radius of drill rig operations
____ Within 40-ft radius of heavy equipment operations
____ Within 10-ft radius of hand augering location
____ Within 10-ft radius of groundwater monitoring well locations
__X__ Other (describe): Within 10-ft. radius of ambient air monitoring stations

Contamination Reduction Zone: At perimeter of Exclusion Zone. (Not applicable)

Support Zone: Outside of Contamination Reduction Zone. (Not applicable)

4.4 Site Communication:

__X__ By two way radio
____ By telephone
____ By pager
____ By other means (describe): Voice and hand signals agreed upon in daily tailgate meetings.

Note: For portable telephone and/or pager assignments call (800) 733-2667 or (714) 756-2667 for information.

SECTION 5.0

SITE OPERATING PROCEDURES

5.1 Initial Site Entry Procedures:

- Locate nearest available telephone, indicate whether private or public. Indicate location on Site Map.
- Determine wind direction, establish hotline, and set up decontamination facilities. Note wind direction and location of decontamination facilities on site map.
- Post Emergency Information Confirm and post emergency phone numbers and hospital route.
- Designate at least one vehicle for emergency use. Post the hospital route and emergency procedures in the designated emergency vehicle.
- If toilet facilities are not located within a 5-minute walk from the decontamination facilities, either provide a chemical toilet and hand washing facilities or have a vehicle available (not the emergency vehicle) for transport to nearby facilities.
- Prior to working on-site, conduct an inspection for physical and chemical hazards.
- Conduct or review utility clearance prior to start of work, if appropriate.
- Note any specialized protocols particular to work tasks associated with the project.

5.2 Daily Operating Procedures:

- Hold daily Tailgate Safety Meetings prior to work start.

  See Attachment 5 for Tailgate Safety Meeting Form.

- Use monitoring instruments and follow designated protocol and contaminant action levels.
- Use personal protective equipment (PPE) as specified.
- Remain upwind of operations and airborne contaminants, if possible.
- Establish a work/rest regime when ambient temperatures and protective clothing create a potential heat stress hazard.
- Do not carry cigarettes, gum, etc. into contaminated areas.
- Refer to Site Safety Officer for specific concerns for each individual site task.
- Do not operate automobile or generate dust within 50 feet of ambient air monitoring stations.

- **ALWAYS EMPLOY THE BUDDY SYSTEM.**
- Be alert to your own physical condition. Watch buddy for signs of fatigue, exposure, etc.
- All accidents, no matter how minor, must be reported immediately to the SSO.

5.3 Decontamination (Decon) Procedures (Personnel and Equipment):

- Personnel decontamination procedures will be required when Level C or higher levels of protection are used by personnel.

  See Attachment 6 for equipment needed to perform decontamination and procedures to be used for decontamination of personnel.

- Dry wipe samples prior to packaging.
- Brush clean the sampling equipment and rinse with distilled water or other cleaning solution.
- Wipe clean the monitoring equipment.
- Heavy equipment will be brushed clean and/or pressure-washed if heavily contaminated.
- Drillers will steam clean augers after use.
- Hand auger buckets will be washed in TSP solution and rinsed in distilled water.
- Decontamination will be performed in a manner that minimizes waste generation.
- Containment systems will be set up as necessary for collection of decon and rinse solutions.
- Spent decon solutions will be containerized in drums or portable tanks and disposed of as waste, if applicable.
- Do not walk through areas of obvious or known contamination and do not handle or touch contaminated materials directly.
- Make sure all PPE has no cuts or tears prior to donning.
- Fasten all closures on suits, covering with tape if necessary.
- Care should be taken to limit the extent that a piece of equipment comes into contact with contamination (e.g. on backhoes, limit contact to the arm and bucket).

5.4 Additional Health and Safety Protocols:

- For confined space entry operations follow all requirements of McLaren/Hart Policy and Procedure 14.0.

SECTION 6.0

EMERGENCY RESPONSE PLAN

6.1 Emergency Incident Procedures:

If an emergency incident occurs, take the following action:

Step 1: Notify the Site Safety Officer and Field Supervisor and size-up situation based on available information.

Step 2: As necessary, request assistance from outside sources and/or allocate personnel and equipment resources for response.

Step 3: Survey and assess existing and potential hazards.

Step 4: As appropriate, evacuate site personnel and nearby public and contain hazard.

Step 5: Prepare incident report.

6.2 Emergency Injury Procedures:

If an injury occurs, take the following action:

Step 1: Get first aid and/or medical attention for the injured person immediately.

Step 2: Notify the Site Safety Officer and Field Supervisor.

Step 3: The Site Safety Officer will assume charge during a medical emergency.

Step 4: Depending on the type and severity of the injury, notify the Manager of Industrial Hygiene, Health and Safety or the Regional Health and Safety Manager and the injured person's Human Resources office.

Step 5: If external emergency assistance is necessary, prevent access to the area until off-site responders arrive. The SSO will transfer control to the responding agency.

Step 6: Prepare the incident report. Within 24 hours of the incident, the Site Safety Officer is responsible for its preparation and submittal Manager of Industrial Hygiene, Health and Safety or the Regional Health and Safety Manager who will notify the Corporate Human Resources office and undertake the necessary incident investigation.

6.3 Emergency Telephone Numbers:

TITLE	NAME	TELEPHONE NUMBER
Police Department*	Shipyard	(207) 438-2444 or Ext. 2444
Fire Department*	Shipyard	(207) 438-2333 or Ext. 2333
Local Hospital	Portsmouth	(207) 433-4042
Local Ambulance/Rescue	Shipyard	(207) 438-2555 or Ext. 2555
McLaren/Hart, Manager Industrial Hygiene, Health & Safety Albany Office	John Reinemann	(518) 869-6192
McLaren/Hart Regional Health & Safety Manager	Henry Robinson	(908) 647-8111
Regional Occupational Physician	William Rogers	(518) 482-0666
Site Contact	Jim Tayon	(207) 438-3832
McLaren/Hart Project Manager	Steve Urschel	(518) 869-6192
Site Safety Officer	SSteve Karpinski	(207) 439-3720
Subcontractors	Upstate Laboratories	(315) 437-0255
Regional Human Resources Dept.	Warren, NJ office	(908) 647-8111

6.4 Hospital Name/Address/Route:

Name: Portsmouth Hospital

Address: 333 Borthwick Ave.
Portsmouth, New Hampshire 03801

Route**: Out Gate 1, up Walker Street, over overpass, Bear left to Route 1, next left under bridge onto Interstate bridge, to rotary (3/4 around), right onto bypass at second set of lights take right onto Borthwick.
** These hospital routes are to be verified
see figure 1 & 2

PERSONNEL RESPONSIBILITIES AND QUALIFICATIONS

TITLE	GENERAL DESCRIPTION	SPECIFIC RESPONSIBILITIES	REQUIRED TRAINING AND MEDICAL SURVEILLANCE
Project Manager	• Reports to upper-level management. • Has authority to direct response operations. • Assumes total control over site activities.	• Prepares and organizes the background review of the job at hand, the Work Plan, the Site Safety and Health Plan, and the field team. • Obtains permission for site access and coordinates activities with appropriate officials. • Ensures that the work plan is completed and on schedule. • Briefs the field teams on their specific assignments. • Uses the Site Safety Officer to ensure that safety and health requirements are met. • Prepares the final report and support files on the response activities. • Serves as the liaison with public officials.	• 40-hr. Hazardous Waste Training including 8-hr. update (29 CFR 1910.120) • Respirator use training (if on-site work) • Medical surveillance participant (if on-site work)
Site Safety Officer /Alternate Site Safety Officer	• Advises the Field Supervisor on all aspects of health and safety on-site. • Recommends stopping work if any operations threaten worker or public health or safety.	• Coordinates safety and health program activities. • Monitors site personnel for signs of stress, such as cold exposure, heat stress and fatigue. • Monitors on-site hazards and conditions. • Participates in preparation of and implements the Site Safety and Health Plan. • Ensures that protective clothing and equipment are properly stored and maintained. • Knows emergency procedures, evacuation routes, and the telephone numbers of the ambulance, local hospital, poison control center, fire department, and police department. • Notifies, when necessary, local public emergency officials. • Coordinates emergency medical care.	• 40-hr. Hazardous Waste Training including 8-hr. update (29 CFR 1910.120) • Respirator use training. • Medical surveillance participant
Field Supervisor	• Responsible for field team operations and safety. • Reports to Project Manager.	• Manages field operations. • Executes the Work Plan and schedule. • Enforces safety procedures • Coordinates with the Site Safety Officer in determining protection level. • Enforces site control. • Documents field activities and sample collection. • Serves as liaison with public officials.	• 40-hr. Hazardous Waste Training including 8-hr. update (29 CFR 1910.120) • Respirator use training. • Medical surveillance participant

ATTACHMENT 1

PERSONNEL RESPONSIBILITIES AND QUALIFICATIONS

PERSONNEL RESPONSIBILITIES AND QUALIFICATIONS

TITLE	GENERAL DESCRIPTION	SPECIFIC RESPONSIBILITIES	REQUIRED TRAINING AND MEDICAL SURVEILLANCE
Team Members	• Reports to Field Supervisor. • Contains at least two people. • For drilling purposes, Team Members consist of a geologist, drilling foreman and helpers.	• Safely completes the on-site tasks required to fulfill the Work Plan. • Complies with Site Safety and Health Plan. • Notifies the Site Safety Officer or Field Supervisor of unsafe conditions	• 40-hr. Hazardous Waste Training including 8-hr. update (29 CFR 1910.120) • Respirator use training. • Medical surveillance participant

ATTACHMENT 2

SITE MAP(S)

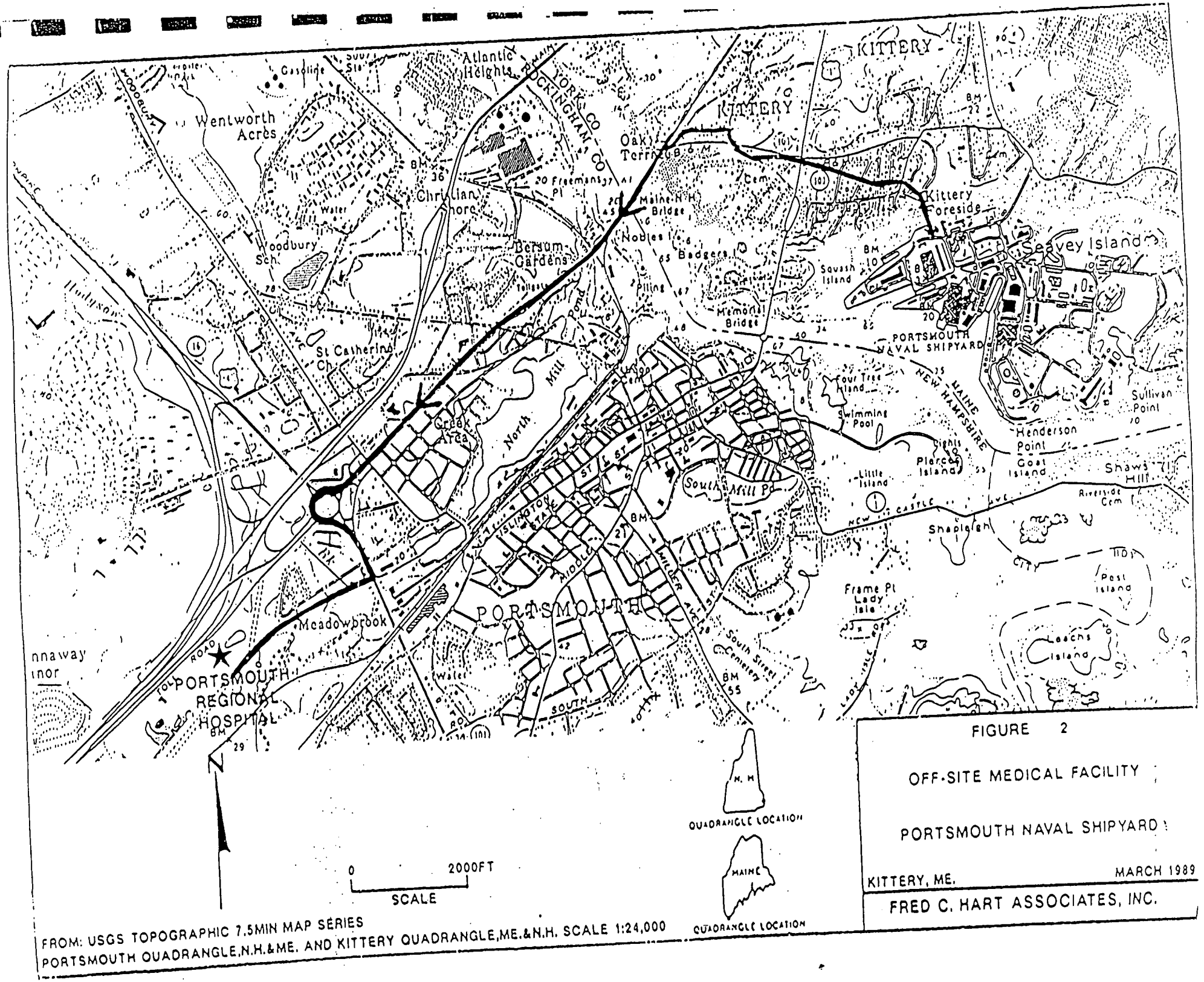

FIGURE 2

OFF-SITE MEDICAL FACILITY

PORTSMOUTH NAVAL SHIPYARD

KITTERY, ME. MARCH 1989

FRED C. HART ASSOCIATES, INC.

FROM: USGS TOPOGRAPHIC 7.5MIN MAP SERIES
PORTSMOUTH QUADRANGLE,N.H.&ME. AND KITTERY QUADRANGLE,ME.&N.H. SCALE 1:24,000

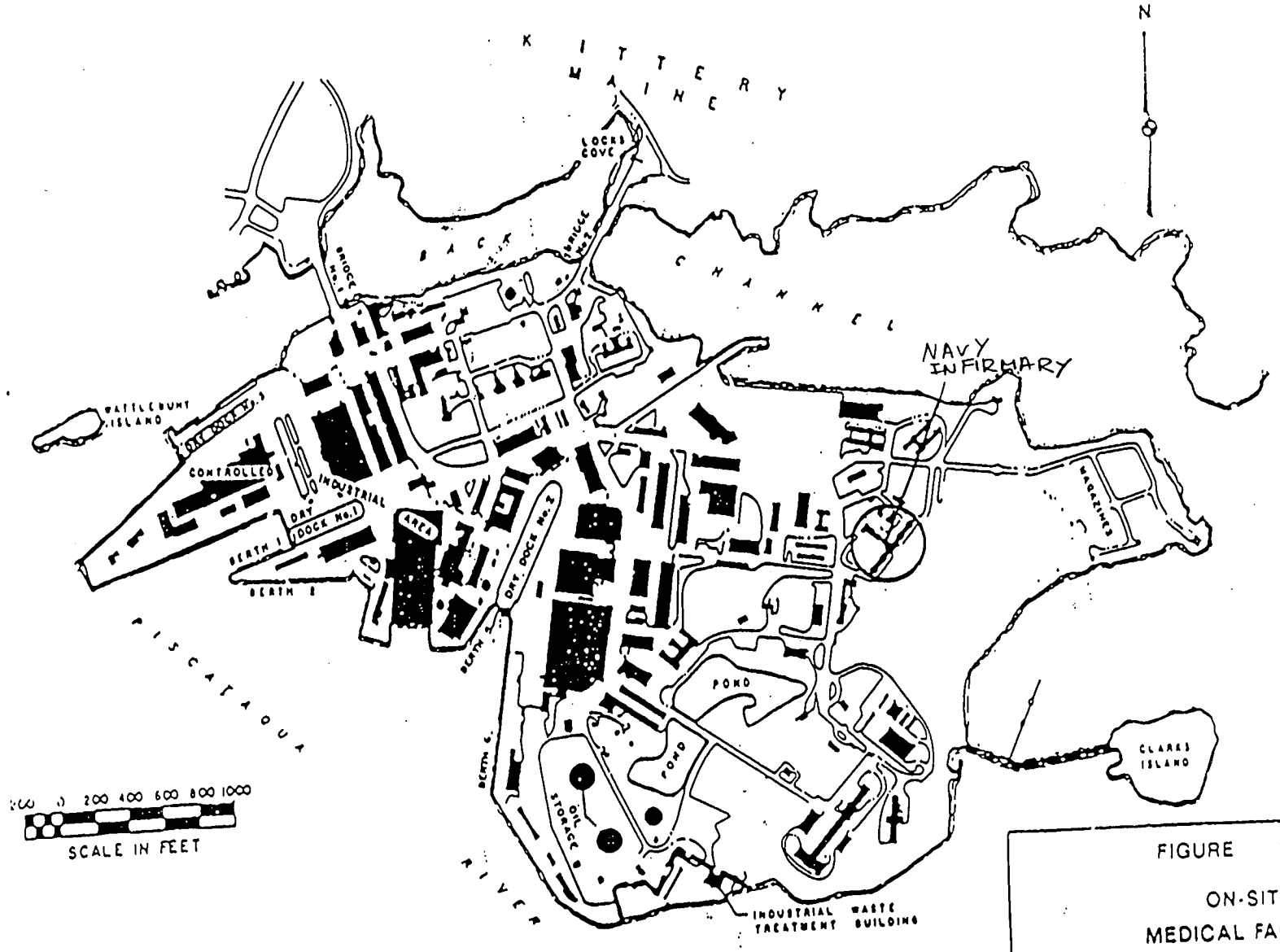

FIGURE 1

ON-SITE
MEDICAL FACILITY
PORTSMOUTH NAVAL SHIPYARD

KITTERY, ME. MARCH 1989

FRED C. HART ASSOCIATES, INC.

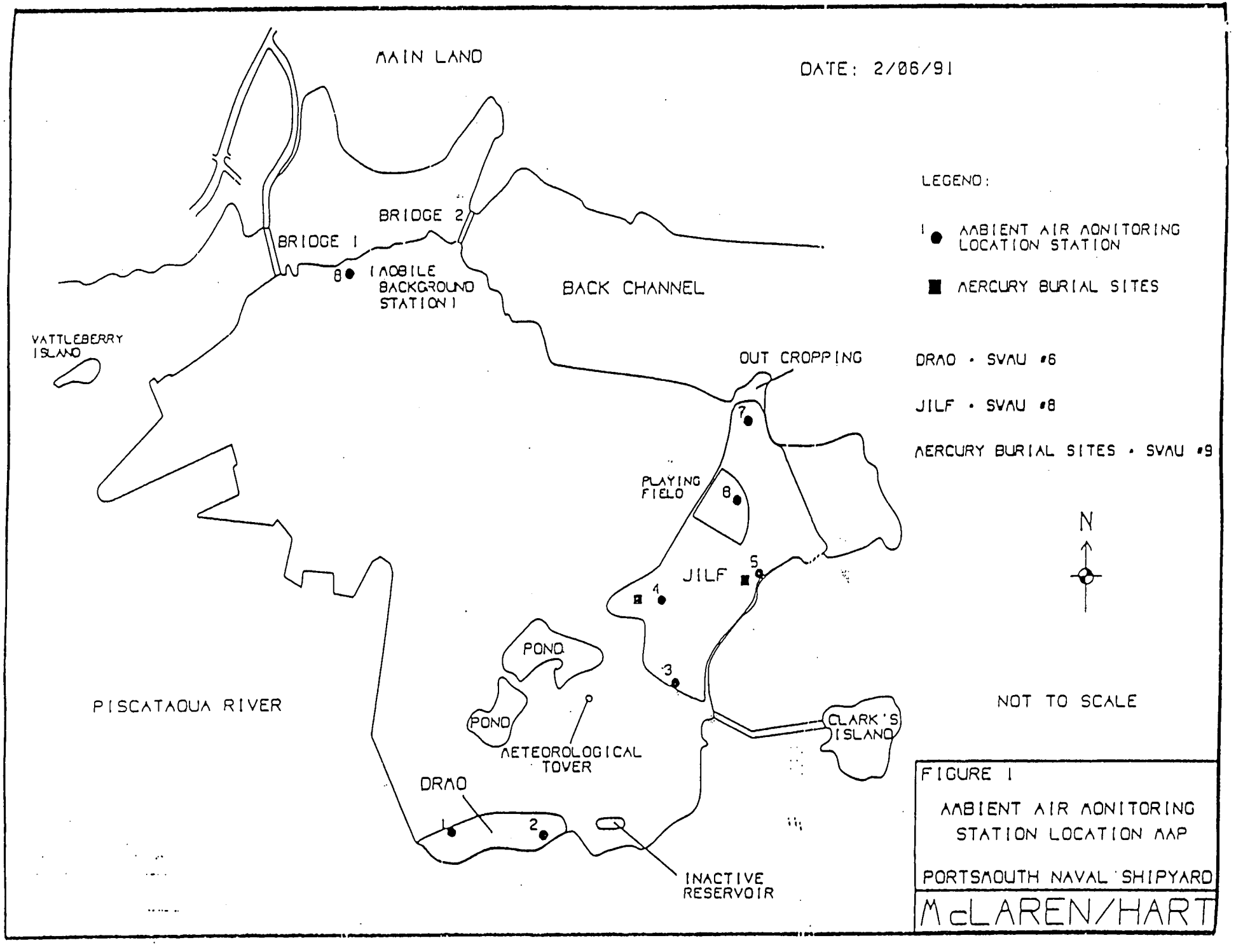
MAIN LAND
DATE: 2/06/91
LEGEND:
1 ● AMBIENT AIR MONITORING LOCATION STATION
■ MERCURY BURIAL SITES
DRAO - SVMU #6
JILF - SVMU #8
MERCURY BURIAL SITES - SVMU #9
N
NOT TO SCALE
BRIDGE 1
BRIDGE 2
8 ● (MOBILE BACKGROUND STATION)
BACK CHANNEL
VATTLEBERRY ISLAND
OUT CROPPING
7
PLAYING FIELD
8
JILF
5
1
3
POND
POND
METEOROLOGICAL TOWER
PISCATAQUA RIVER
CLARK'S ISLAND
DRAO
1
2
INACTIVE RESERVOIR
FIGURE 1
AMBIENT AIR MONITORING STATION LOCATION MAP
PORTSMOUTH NAVAL SHIPYARD
McLAREN/HART

ATTACHMENT 3

UTILITY CLEARANCE CHECK DOCUMENTS
OPERATIONS

UTILITY CLEARANCE CHECK
(FILL OUT BEFORE CALLING USA)

McLaren Hart

Client and Site Name:	Task Number:	Project Start Date:	Clearance Request Date:

Task Descriptions:
(well drilling, trenching, etc.) _____

Project Location: _____

McLaren Project Manager: _____

Drilling / Construction Supervisor: _____

USA Contact Date: _____ USA Ticket Number: _____
(1-800-642-2444)

FACILITY DRAWINGS INSPECTION (INITIALS AND DATE)		FIELD VERIFICATION (INITIALS AND DATE)	
Water Main		Water Main	
Sanitary		Sanitary	
Storm		Storm	
Telephone		Telephone	
Electrical		Electrical	
Gas Lines		Gas Lines	
Steam Lines		Steam Lines	
Liquid Fuel		Liquid Fuel	
Compressed Air		Compressed Air	
Overhead Lines		Overhead Lines	

Date Performed:: | Facility Contact:

Clearance Engineer (signature and date): | Supervising Engineer Verification (after utility clearance, signature and date):

Notes: _____

ATTACHMENT 4

TAILGATE SAFETY MEETING FORM

TAILGATE SAFETY MEETING

CLIENT: _____ FACILITY: _____

DATE: _____ TIME: _____ JOB NUMBER: _____

SITE LOCATION: _____

TYPE OF WORK: _____

CHEMICALS USED: _____

SAFETY TOPICS PRESENTED

PROTECTIVE CLOTHING/EQUIPMENT: _____

CHEMICAL HAZARDS: _____

ACTION LEVELS: _____

PHYSICAL HAZARDS: _____

EMERGENCY PROCEDURES: _____

HOSPITAL/CLINIC: _____

PHONE: _____ PARAMEDIC PHONE: _____

SPECIAL EQUIPMENT: _____

OTHER: _____

ATTENDEES

PRINTED NAME:	SIGNATURE:

MEETING CONDUCTED BY: _____

SUPERVISOR: _____

h&s1

ATTACHEMENT 5

EXCAVATION OPERATIONS

HEALTH AND SAFETY POLICY AND PROCEDURE

HS 15.0 EXCAVATION PROGRAM

1.0 SUBJECT: Excavation Program

2.0 EFFECTIVE DATE: January 1, 1990

3.0 APPLICABILITY: All McLaren/Hart, ChemRisk, Western Laboratories employees, and other acquired entities.

4.0 APPLICABLE REGULATIONS:

A. Federal

1.0 OSHA
OSHA Regulation 29 CFR 1926.650-653.

B. State

1.0 California
CCR Title 8, Subchapter 4, Article 6, Sections 1539-1541.

B. C. Local
Multiple local City, County and/or Fire Department regulations may also apply.

5.0 DOCUMENTS ATTACHED:

Attachment 1: Utility clearance check list;
Attachment 2: Excavation Safety Form;
Attachment 3: 29 CFR 1926.650-653 (See Appendix).

6.0 DEFINITIONS:

A. Trench - A narrow excavation with the depth greater than the width and the width being no greater than 15 ft.

B. Excavation - Any mechanically-made cavity or depression in the earth's surface.

C. Confined space - The concurrent existence of the following:

1. Limited egress/access
2. The presence, or the potential for the presence, of a hazardous atmosphere.

7.0 GENERAL POLICY STATEMENT:

It is McLaren/Hart's Policy to conduct all excavation/trenching operations in a manner that minimizes risk of accidental injury to McLaren/Hart personnel or client property.

Under no conditions shall an employee enter an excavation which is greater than or equal to 5 feet in depth unless that excavation has been inspected and approved by a Registered Civil Engineer.

8.0 RESPONSIBILITIES:

A. The Corporate Environmental Health and Safety Coordinator (CEHSM) is responsible for the development and periodic amendment of this policy.

NGR IH&S INCLUSION

B. The Regional Environmental Health and Safety Coordinator (REHSM) is responsible for the implementation of this policy.

C. The Project Manager or designee will enforce the policy on individuals involved in an excavation project to ensure a healthy and safe work environment.

D. Employees will be responsible for adhering to excavation precautionary requirements as dictated by the Project Manager and Site Safety and Health Plan.

E. Contractors will be held responsible for developing and implementing their own excavation program that is as least as restrictive as this policy a it pertains to their employees.

9.0 PROCEDURE:

A. Utility Clearance

1.0 A utility clearance must[1] be conducted prior to the commencement of any excavation/trenching operations (see Attachment).

2.0 The checklist outlined in the Excavation Safety Form (see Attachment) must be utilized in accomplishing utility clearance.

3.0 The locations of all utilities must be clearly identified and precautions taken to ensure utilities are not accidentally contacted by equipment/machinery utilized in the excavation process. Cal-OSHA high voltage electrical safety standards (California Code of Regulations, Title 8, Subchapter 4, Article 6, Sections 1539-1541) must be referenced for overhead electrical utility clearances.

4.0 Excavations in landfills will require use of ground penetrating radar or equivalent special investigation processes in addition to the normal utility clearance approved by the REHSM prior to work start.

B. Excavation Entry

1.0 **ESSENTIAL ENTRY ONLY:** Where feasible, that is where other means for work/task accomplishment is practicable and safe, employees must not be allowed into excavations/trenches. Use **personnel entry only when necessary.**

Under no conditions shall an employee enter an excavation which is greater than or equal to 5 feet in depth unless that excavation has been inspected and approved by a Registered Civil Engineer

Reg CE

2.0 **ENGINEERING REQUIREMENTS:** One or a combination of the following control measures must be utilized if employee entry into an excavation/trench with sides greater than or equal to 5 ft. in depth is necessary.

[1]Except where the Regional Manager specifically authorized documented exemption from this requirement pursuant to the guidelines of Health and Safety Memo #4 dated February 14, 1990.

a) Sloping of excavation/trench sides
b) Shoring of sides
c) Establish barriers that prevent employees from entering areas impacted by the movement of soil from an excavation site.

Note: Control measures may be required with trench or excavations less than 5 feet deep if soil conditions indicate a hazardous situation.

3.0 **SPECIAL PRECAUTIONS:** Precautions must be taken to minimize the stress induced upon the sides of an existing excavation, i.e., impact of water, loading, vibration, etc.

4.0 **ACCESS/EGRESS:** A means of rapid egress from the excavation must be provided.

5.0 **SITE CONTROL:** Adequate barricading and/or other site control methods must be employed to avoid accidental and/or unauthorized entry into excavation. Lighted barricades must surround the excavation if it is to be left open after dark.

6.0 **DAILY INSPECTION PRIOR TO ENTRY:** Excavation sites must be inspected on a daily basis to ensure that shoring systems are maintained, as well as identify any changes in soil condition, especially after it has rained or an earthquake has occurred.

7.0 **SPOILS STORAGE:** Spoil banks and material must be situated as far from the edge as practicable <u>but no closer than 2 ft.</u> of an excavation.

8.0 **HEAVY EQUIPMENT STORAGE:** Heavy equipment must be situated as far from the edge of an excavation as possible. Equipment close to the edge (but no closer than 2 ft.) must be situated so that the weight of the equipment is distributed over as wide an area as possible.

9.0 **EXCAVATIONS $\geq$ 20 FEET IN DEPTH:** Support systems (shoring, etc.) must be designed by a State Registered Civil Engineer. Civil or geotechnical engineering approval of support system installation will also be needed with excavations greater than 20 ft. deep, adjacent to structures, or subject to vibration or ground water.

C. Operation of Earth Moving machinery/equipment.

1.0 Volume 29 of the Code of Federal Regulations and Title 8 of the California Code of Regulations, Construction and General Industry Standards must be referenced for operating procedures and requirements that apply to the specific equipment/machine items utilized during the excavation process.

D. Confined Space Operations

1.0 Many excavations fall under a confined space category. Consequently, all requirements of the McLaren/Hart's Confined Space Program (HS 14.0) must be implemented where applicable.

2.0 A typical confined space scenario in an excavation involves driving a vehicle powered by a combustion engine into an excavation.

- OR -

Excavation in a zone contaminated with materials that have a density greater than air.

E. Miscellaneous

1.0 California OSHA standards require employees to obtain a permit before engaging in an excavation greater than five feet deep in which personnel will be required to enter.

2.0 Suitable barriers must be established to re-route traffic patterns and prevent accidental entry.

10.0 MEDICAL SURVEILLANCE: NONE

11.0 TRAINING REQUIREMENTS: NONE

12.0 RECORDKEEPING REQUIREMENTS:

A. The original Excavation Safety Form and Utility Clearance Checklist must be maintained with the client file, along with confined space records, should a confined space operation have occurred.

McLaren Hart

UTILITY CLEARANCE CHECK
(FILL OUT BEFORE CALLING USA)

Client and Site Name:	Task Number:	Project Start Date:	Clearance Request Date:

Task Descriptions:
(well drilling, trenching,etc.) _____

Project Location: _____

McLaren Project Manager: _____

Drilling / Construction Supervisor: _____

USA Contact Date: _____ USA Ticket Number: _____
(1-800-642-2444)

FACILITY DRAWINGS INSPECTION (INITIALS AND DATE)	FIELD VERIFICATION (INITIALS AND DATE)
Water Main _____	Water Main _____
Sanitary _____	Sanitary _____
Storm _____	Storm _____
Telephone _____	Telephone _____
Electrical _____	Electrical _____
Gas Lines _____	Gas Lines _____
Steam Lines _____	Steam Lines _____
Liquid Fuel _____	Liquid Fuel _____
Compressed Air _____	Compressed Air _____
Overhead Lines _____	Overhead Lines _____

Date Performed:: | Facility Contact:

Clearance Engineer (signature and date): | Supervising Engineer Verification (after utility clearance, signature and date):

Notes: _____

11-5-90

ATTACHMENT 2

EXCAVATION SAFETY

I. Pre-Excavation Requirements: for excavations, trenches, construction (building structure, scaffolding, falsework) and demolition.

A. Determination, identification and locations of underground installations were made on ___/___/___ by McLaren/Hart
mo day yr

based on consultation and/or information from _____.

Initial by
Project Manager _____

B. Owners of potentially affected underground facilities are _____, _____, _____ and were
(list names of individual companies)

notified by McLaren/Hart of the proposed excavation on ___/___/___, mo day yr

___/___/___, ___/___/___, ___/___/___, ___/___/___,
mo day yr mo day yr mo day yr mo day yr

(respectively), at least 48 hours prior to start of work.

Initial by
Project Manager _____

C. All potentially hazardous surface encumbrances (including trees, poles, fences, etc.) have been removed as of ___/___/___,
mo day yr

Initial by
Project Manager _____

II. Excavation Construction and SOP Requirements

A. Excavations will be/were supervised at all times by a person qualified to modify sloping/shoring in accordance with Cal/OSHA regulations to ensure worker safety. This person will make/made entry/no entry decisions based on his/her risk assessment of thee situation and shall ensure work procedures in accordance with Cal/OSHA regulations.

Initial by
Project Manager _____

Initial by
Project Manager _____

B. 1. Excavations of depths greater than five feet have been adequately shored, sloped, benched, or otherwise secured in compliance with Cal/OSHA: Title 8, Subchapter 4, Article 6, Sections 1541, 1542, 1544 and 1547.

Initial by
Project Manager _____

Initial by
Project Manager _____

2. Excavations less than five feet, but with sides in hazardous conditions have been adequately supported.

C. 1. An exposure risk assessment was performed by a qualified person of the excavation site after rain storm or other hazard increasing occurrence (e. g., cave-in surrounding watermain breaks, electrical hazard, etc.) before re-entry was permitted.

Initial by
Project Manager _____

Initial by
Project Manager _____

2. Daily inspections of the excavation were/are conducted by a qualified individual. Scope of the inspection includes a church of excavation shoring integrity and changes in soil condition.

D. Excavated material will/has been moved/stored a sufficient distance from the excavation site (a minimum of 2 feet from excavations greater than five feet in depth and one foot from excavations less than five feet in depth) to comply with Cal-OSHA, Title 8, Subchapter 4, Article 6, Section 1540.

Initial by
Project Manager _____

Initial by
Project Manager _____

E. All access/egress-ways, ladders or stairways were/are securely fastened with distance between these access/egress-ways not greater than 25 feet.

Initial by
Project Manager _____

F. Barriers were/will be set up surrounding the excavation area to prevent accidental entry.

Initial by
Project Manager _____

G. Situations involving excavation to a depth of greater than 20 feet were performed in conjunction with a civil engineer currently registered in California to comply with Cal-OHSA, Title 8, Subchapter 4, Section 154.

Initial by
Project Manager _____

H. Supervising person(s) shall be/were prepared and have the capability at all times to secure personnel within the excavation area.

Initial by
Project Manager _____

III. Excavation Completion

A. Upon completion of excavation, area will be/was backfilled on ____/____/____, or permanent retainer wall will be/was
mo day yr

constructed on ____/____/____, under the supervision of
mo day yr

a qualified person.

Initial by
Project Manager _____

References: Cal-OSHA, Title 8, Construction Safety Orders, Subchapter 4, Article 6.

ATTACHMENT 6

CONTRACTOR SAFETY

HEALTH AND SAFETY POLICY AND PROCEDURE
HS 24.0 CONTRACTOR SAFETY

1.0 SUBJECT: Safety of McLaren/Hart's Contractor

2.0 EFFECTIVE DATE: January 1, 1990

3.0 APPLICABILITY: All personnel contracted to provide services for McLaren/Hart

4.0 APPLICABLE REGULATIONS:

A. Federal

1. OSHA Regulation 29 CFR 1904
2. OSHA Regulation 29 CFR 1910
3. OSHA Regulation 29 CFR 1926

B. State

To Be Determined

5.0 DOCUMENTS ATTACHED: NONE

6.0 DEFINITIONS:

A. Contractor - Any person who by contract provides services for McLaren/Hart. Contractor's personnel are those employed by the Contractor.

7.0 PURPOSE:

It is the Policy of McLaren/Hart to establish healthy and safe working conditions for Contractors while performing services. This Policy is in keeping with Federal and State Environmental Health and Safety Regulations and other sections of McLaren/Hart's Health and Safety Policies and Procedures.

0131ale6.P24

8.0 RESPONSIBILITIES:

A. Corporate Environmental Health and Safety Manager (CEHSM) is responsible for the development and amendments of this policy.

B. Regional Environmental Health and Safety Manager (REHSM) is responsible for the implementation of this policy.

The REHSM will ensure that Project Managers are aware of this policy to inform all McLaren/Hart Contractors of its provisions.

C. Project Manager is responsible for providing this policy to Contractor's, especially those rendering field services.

Project Managers are responsible for providing assistance and guidance to contracted personnel to ensure compliance with McLaren/Hart's Health and Safety Policy and Procedure requirements.

The Project Manager is responsible for auditing Contractor's operation where potential hazards exists to ensure that the operation is performed in the most safe manner.

D. Contractor is responsible for complying with this policy and all provisions of Federal and State Environmental Health and Safety regulations and applicable standards.

Contractor is responsible for designating a Health and Safety representative, who will serve as a Site Safety representative for his employees. McLaren/Hart will designate its own SSO.

The Contractor is responsible for all subcontract issues.

E. The Site Safety Officer is responsible for ensuring that the Site Safety and Health Plan is being followed in the field.

The Site Safety Officer is responsible for ensuring that all persons assigned to work involving hazardous material or operations have appropriate medical surveillance and training.

9.0 PROCEDURE:

A. General

1.0 Contractor must use good professional judgement while performing services for McLaren/Hart.

2.0 Contractor will be required to show proof of workers' compensation and public liability and property damage insurance coverages.

B. Field Operations

1.0 Personal Protective Equipment (PPE) must be provided by the Contractor for use by the Contractor's personnel only. The proper use and maintenance of such equipment is the responsibility of the Contractor. McLaren/Hart does not supply Contractors ~~ppe~~ PPE.

2.0 Contractors, especially those rendering field services, must provide McLaren/Hart with the name and title of the health and safety representative designated by the Contractor.

3.0 Contractors are required to have adequate training for field operations and participate in a Medical Surveillance Program, as required by 29 CFR 1910.120.

4.0 Contractors must supply personnel with respiratory protection and comply with 29 CFR 1910.134. McLaren/Hart takes no responsibility for respiratory protective equipment malfunctions, damage, misuse or otherwise.

5.0 If the project site requires a Site Safety and Health Plan, Contractor is required to provide McLaren/Hart a copy of that plan for review and approval by the REHSM, unless such plan will be provided by McLaren/Hart under agreement prior to site entry.

6.0 Contractor may use a Site Safety and Health Plan developed and approved by McLaren/Hart's CEHSM or REHSM.

ATTACHMENT 7

PERSONAL PROTECTIVE EQUIPMENT

C. Violations or Misconduct of Contractors

1.0 Violations to McLaren/Hart's Policy and Procedures and/or state and federal regulations must be reported to Site Safety Officer or Contractor's safety representative, who in turn must report the violation to the Project Manager and the REHSM. The Project Manager will consult with the Regional Manager and decide the course of action.

2.0 In any situations presenting imminent jeopardy to the health or safety of personnel or loss of property, the Site Safety Officer has authority to issue a stop work order.

3.0 Field activities may be modified to resolve violation or rectify condition which led to issuance of a stop work order, but must be approved by the Site Safety Officer. If a discrepancy occurs regarding modifications of field activities, the Project Manager must be consulted.

D. Accidents/Incidents

1.0 All accidents/incidents involving Contractor personnel must be promptly reported. Refer to McLaren/Hart's Health and Safety Policy 8.0 - Accident Investigation and Reporting Policy.

2.0 Contractor and McLaren/Hart Project Manager are responsible for completing Accident/Incident Reports and informing the CEHSM.

10.0 MEDICAL SURVEILLANCE:

A. All Contractor personnel assigned to hazardous waste site operations are required to participate in an medical monitoring program pursuant to 29 CFR 1910.120. Contractors must have available for inspection, medical records from the Contractor's occupational physician which demonstrate active program participation in a medical monitoring program and that each employee assigned to the project has had medical clearance to work in a hazardous environment within the last year, prior to commencement of work.

11.0 TRAINING REQUIREMENTS:

A. All Contractors must have adequate training to comply with Federal and State requirements which include, but are not limited to, 29 CFR 1926.58, 1910.120, 1910.134, 1910.1001 at hazardous materials or waste sites, as appropriate for the work site.

ASBESTOS

HAZ. WASTE

ASBESTOS

HEALTH AND SAFETY POLICY AND PROCEDURE

HS 11.0 PERSONAL PROTECTIVE EQUIPMENT

1.0 SUBJECT: Personal Protective Equipment

2.0 EFFECTIVE DATE: January 1, 1990

3.0 APPLICABILITY: All McLaren/Hart employees, including ChemRisk, Western Laboratories employees, and any other employees of entities acquired.

4.0 APPLICABLE REGULATIONS:

A. Federal

1.0 OSHA
OSHA Regulation 29 CFR 1910.120
OSHA Regulation 29 CFR 1926.
OSHA Regulation 29 CFR 1910.132-140

B. State

1.0 California
CCR Title 8 Chapter 4, Subchapter 7 and Subchapter 4.

C. Guideline Documents

ANSI Standard for Eye and Face Protection Z87.1 -1979.
ANSI Standard for Industrial Head Protection Z89.1 - 1989.
ANSI Standard for Safety-Toe Footwear Z41 - 1983.

5.0 DOCUMENTS ATTACHED:

Attachment 1: Health and Safety Check List;
29 CFR 1910.120 (See Appendix);
29 CFR 1910.132-40 (See Appendix);
29 CFR 1926 (See Appendix).

6.0 DEFINITIONS:

A. Personal Protective Equipment (PPE) - includes:

- Hard hats
- Chemical goggles
- Safety glasses - prescription/non-prescription
- Gloves
- Disposable coveralls
- Chemical boots
- Respiratory protection
- Steel toe safety shoes/boots

7.0 GENERAL POLICY STATEMENT:

It is McLaren/Hart's Policy to ensure that all employees wear the appropriate PPE when performing field activities in hazardous conditions as specified in a site specific safety and health plan.

8.0 RESPONSIBILITIES:

A. It is the responsibility of McLaren/Hart to provide Personal Protective Equipment at no cost to employees, as necessary.

B. The **Corporate Environmental Health and Safety Manager** (CEHSM) is responsible for the development and maintenance of this policy. The CEHSM will renew this policy annually.

C. The **Regional Health and Safety Manager** (REHSM) is responsible to ensure the proper type of PPE will be used at specified sites, as delineated in the Site Safety and Health Plan (SSHP).

The REHSM must make copies of this policy available to each employee.

D. The **Regional Manager** is responsible for arranging and providing for adequate funding and staff support to maintain PPE stock for the office.

E. **Project Manager** will ensure that all employees comply with PPE requirements specified in the SSHP.

F. **Field Supervisor/Site Safety Officer** will utilize the Health and Safety Checklist to ensure that all PPE identified in the SSHP are present and utilized by McLaren/Hart and Contractor employees.

The Field Supervisor will monitor the integrity of employees' PPE and if PPE is found to be damaged or contaminated, the Field Supervisor must immediately assess the situation and require the employee or contractor to get new PPE if appropriate.

G. Employees are required to utilize PPE as determined by the SSHP.

H. Contractors are responsible for procurement and distribution of PPE required by the SSHP to own employees.

IT IS McLAREN/HART'S POLICY NOT TO LOAN ANY EQUIPMENT OR MATERIALS TO CONTRACTORS. Exemption from this policy must be approved by a Vice President. However, if a contractor should use McLaren/Hart equipment, materials or property, the contractor is liable for any borrowed McLaren/Hart PPE.

9.0 PROCEDURES:

A. General

1.0 A subsidy of up to $100 will be allotted each employee per 12 month period for the purchase of steel-toed boots.

2.0 A subsidy will be allotted any employee who requires such, pursuant to Regional H&S evaluation for prescription safety glasses. A corporate account with Lens Crafters is set up for this purpose. Special authorization from Corporate Health & Safety and issuance of a voucher is required prior to purchase and/or reimbursement. No reimbursement will be given if glasses are purchased prior to approval by Corporate Health and Safety. Request forms are available from the Regional Office Manager and/or the Regional Health and Safety Coordinator.

3.0 COPIES OF THIS POLICY ARE MADE AVAILABLE TO EMPLOYEES BY THE REHSM.

B. PPE Approval

1.0 All PPE must be approved for the specific hazard that will be encountered. The CEHSM, REHSM, or designated Industrial Hygienist will approve appropriate PPE.

2.0 McLaren/Hart will purchase only equipment that has been approved by the American National Standards Institute, such as hard hats, safety glasses, and steel-toed safety shoes.

3.0 If PPE integrity is in question, the CEHSM, REHSM, or designated Industrial Hygienist will consult the manufacturer to determine the appropriateness of PPE, such as chemical boots, gloves, and coveralls.

C. Selection of PPE

1.0 The selection of appropriate PPE will be determined by the REHSM or designated Industrial Hygienist during the development and approval of the SSHP.

2.0 Respiratory protection selection and use procedures are delineated in McLaren/Hart's Respiratory Protection Program (HS 12.0).

3.0 No one material adequately prevents permeation of all hazardous liquids. Consequently, the choice of PPE material used will depend on specific hazardous liquid that will be encountered.

4.0 The following must be considered when reviewing a manufacturer's permeation information relative to specific hazardous liquids and PPE materials.

a) The length of time the PPE material was in contact with the hazardous material before permeation occurred.

b) The thickness of PPE material upon prolonged exposure.

c) The integrity of the PPE material upon prolonged exposure. It should be noted that the PPE material does not necessarily have to lose its integrity for permeation to occur.

5.0 Mixtures are of particular concern. A specific PPE material may provide adequate permeation protection against only one of the mixture constituents. Dual PPE may sometimes be necessary.

6.0 There is limited permeation information on the variety of PPE materials available. Consequently, all users of PPE must be made aware of this fact and request an immediate report of any signs of hazardous material breakthrough.

7.0 These factors must be considered when selecting PPE:

a) The nature of the hazardous operation
b) The degree and physical state of the hazard
c) Hazards the PPE in itself may create
d) The activities of the workers
e) Heat stress
f) The degree of protection afforded

D. PPE Use

1.0 Field work by Contractors or McLaren/Hart personnel will not be initiated until all PPE required pursuant to the SSHP are available for use.

2.0 Alterations in PPE must be in accordance with Site Safety and Health Plan Policy (HS 5.0).

3.0 Damaged or contaminated PPE must not be used.

E. PPE Storage

1.0 PPE must be stored in a manner that will preclude damage or contamination. Damaged or contaminated PPE must not be used.

F. **Decontamination and/or Disposal of PPE**

1.0 All PPE worn on site must be decontaminated and/or disposed of in accordance with the SSHP specifications for the site.

G. Program Review

1.0 The CEHSM will review this policy annually and will consider the following:

a) a survey of selected sites to ensure compliance with regulations applicable to the specific site involved;

b) the number of person-hours that workers wear various protective ensembles;

c) accident and illness experience;

d) levels of exposures;

e) adequacy of equipment selection;

f) adequacy of the operational guidelines;

g) adequacy of decontamination cleaning, inspection, maintenance, and storage procedures;

h) adequacy and effectiveness of training and fitting procedures;

i) coordination with overall safety and health program elements;

j) the adequacy of program records.

10.0 MEDICAL SURVEILLANCE:

A. Medical clearance from McLaren/Hart's physicians, specified in the Medical Surveillance Program is required (see HS 10.0).

11.0 TRAINING REQUIREMENTS:

A. The user of a particular PPE must be made aware of its limitations prior to the use of the PPE.

B. Training requirements will be satisfied through McLaren/Hart's Health and Safety Training Program (HS 4.0).

12.0 RECORDKEEPING REQUIREMENTS:

A. An employee will be designated as the PPE purchaser and manager for each regional office. This individual will be responsible for tracking, ordering and storing PPE under the direction of the Regional Health and Safety Manager.

HEALTH AND SAFETY CHECKLIST

The following items must be identified and present (as specified by the Site Safety and Health Plan) prior to work being initiated by McLaren/Hart or Contractor employees.

Personal Protective Equipment

- [ ] Hearing Protection
- [ ] Respiratory Protection
- [ ] Hard Hat
- [ ] Gloves
- [ ] Disposable Tyvek Suits or Overalls
- [ ] Steel-toed Safety Shoes
- [ ] Eye Protection

Monitoring Equipment

- [ ] TIP or OVA
- [ ] Combustible gas/or deficiency meter

Other Items

- [ ] Fire Extinguisher
- [ ] Traffic Control measures in place
- [ ] Emergency response numbers/procedure identified
- [ ] Emergency eyewash/shower
- [ ] First Aid Kit

ATTACHMENT 8

HEARING CONSERVATION

11-6-90

HEALTH AND SAFETY POLICY AND PROCEDURE

HS 20.0 HEARING CONSERVATION PROGRAM

1.0 SUBJECT: Hearing Conservation Program

2.0 EFFECTIVE DATE: January 1, 1990

3.0 APPLICABILITY: All McLaren/Hart employees, including ChemRisk employees, Western Laboratories employees, and any other employees of entities acquired.

4.0 APPLICABLE REGULATIONS:

A. Federal

1.0 OSHA
OSHA Regulation 29 CFR 1910.95

B. State

1.0 California
CCR Title 8 Code Chapter 4,
Subchapter 7, Article 105, Section 5099

C. Local city and county ordinances

D. Guidance Documents

ANSI 53.28

5.0 DOCUMENTS ATTACHED:

Noise measurement documentation form; Octave band analysis form; Cal-OSHA noise standard.

0131ale4.P20

6.0 DEFINITIONS:

A. Action Level - 8-hour TWA exposure of 85 dBA. This is equivalent to 50% of the PEL.

B. Administrative Controls - Any procedure that limits daily exposure to noise by control of the work schedule.

C. Audiogram - A record of the threshold of audibility as a function of frequency obtained for each of employee's ears during an audiometric examination.

D. Audiologist - A professional specializing in the study and rehabilitation of hearing, who is certified by the American Speech, Hearing and Language Association, or licensed by a state board of examiners.

E. Audiometer - An electronic instrument that conforms to the requirements and specifications of ANSI Standard §3.6-1969 (R 1973) used for measuring hearing threshold levels.

F. Baseline Audiogram - The initial audiogram test to which future audiograms are compared.

G. Deafness - The otological condition in which the hearing threshold level for speech, or the average hearing threshold level for pure tones of 500, 1,000, and 2,000 Hz is at least 93 dB (re: ANSI S3.6-1969) or 82 dB (re: ANSI-1951). This is generally accepted as representing a 100% hearing handicap for everyday speech.

H. Decibel - A unit of measurement of sound level. The decibel level of a sound is related to the logarithm of the ratio of sound pressure to a reference pressure. The dB has meaning only when the reference quantity is known. The internationally accepted reference pressure used in acoustics and at NASA is 20 micropascals (uPa). In the past, other units have been used (i.e. 20 uN/M^2, 0.0002 ubar, 0.0002 $dyne/cm^2$), which are all physically equivalent to 20 uPa.

1. "dBA" (decibels - A-weighted) - A unit of measurement of sound level corrected to the A-weighted scale, as defined in ANSI S1.4-1971, using a referenced level of 20 micropascals.

2. "dBP" - The unit used to express peak sound pressure level of impulse noise. The peak instantaneous pressure is express in decibels using a reference level of 20 micropascals.

I. Engineering Control - Any design procedure that reduces the sound level either at the source of the noise or within the hearing zone of individuals.

J. Hazardous Noise

1. Steady State Noise - (Continuous/Intermittent Noise) Noise equivalent to 85 dB or greater A-weighted sound pressure level (dBA) is considered to be hazardous.

2. Impulse or Impact Noise - A sound with a rise time of not more than 35 milliseconds to peak intensity and a duration of not more than 500 milliseconds to the time when the level is 30 dB below the peak. If the impulses recur at intervals of less than one-half second, they shall be considered as steady-state noise. Noise equivalent to 140 dB or greater peak sound pressure level (dBP) is considered to be hazardous.

K. Hearing Threshold Level (HTL) - The amount, in decibels, by which the threshold of audibility for an ear differs from the standard audiometric referenced level.

L. Hertz (Hz) - The international symbol for cycles per second and is the unit of measurement for the frequency of tones.

M. Monitoring Audiogram - Periodic audiometric tests, obtained subsequent to the reference audiogram, which are used to detect shifts in the individual's threshold of hearing.

N. Reference Audiogram - The first audiogram obtained upon employment by McLaren/Hart. This audiogram must be obtained when the individual is free from auditory fatigue and other transient otologic pathology. (The term "reference audiogram" also applies to pre-placement, pre-assignment, entrance, or baseline audiograms).

O. Sound Level Meter (SLM) - Measures the root mean square (rms) sound pressure level in decibels.

P. Dosimeter - Electronically integrates various exposure over time and generally presents results in terms of the percent (or degree) of the allowable exposure. Dosimeters used for determining if employees must be included in the Hearing Conservation Program must have an 80 dB threshold.

7.0 GENERAL POLICY STATEMENT:

The objective of this McLaren/Hart Policy is to control noise generated by McLaren/Hart or Contractor operations and to prevent occupational noise-related hearing loss among employees. To provide a work environment free from hazardous noise, priority will be given to the use of engineering procedures which to the greatest extent practical eliminate, control, or isolate sources of hazardous noise. Administrative, work-practice or personal protective controls will be implemented whenever engineering controls are not feasible, or during the period of time it takes to implement such controls. Audiometric monitoring data will be utilized to confirm that prescribed controls continue to be effective.

NOTE: The control measures identified in this program will be applied equally to persons with normal hearing and persons with documented hearing loss or deafness.

8.0 RESPONSIBILITIES:

A. **The Corporate Environmental Health and Safety Manager** (CEHSM) is responsible for the development and amendments of this policy.

B. **The Regional Environmental Health and Safety Manager** (REHSM) is responsible for the implementation of this policy.

The REHSM or designee will properly fit employee with the necessary ear protective devises to ensure proper fit.

C. **Project Managers** are responsible for ensuring that consideration is given to noise exposure reduction and that employees affected by hazardous noise levels are included in the Hearing Conservation Program.

D. **Field Supervisor/Site Safety Officer** must refer any and all personnel who complain of hearing loss or other hearing or ear problems to the REHSM.

The Site Safety Officer will enforce the wearing of hearing protective devices when specified in the Site Safety and Health Plan or unexpected noise hazards occur without warning.

E. **Employees** are responsible for continuously utilizing control procedures established for maintaining effective noise-exposure control, including wearing and maintaining hearing protective devices furnished for their protection.

Employees are responsible for advising the REHSM of areas, operations, and equipment where they suspect that noise levels may be excessive.

9.0 PROCEDURE:

A. Noise Hazard Evaluation

1.0 Field Supervisor/Site Safety Officer, or designee are responsible for identifying hazardous noise areas using noise monitoring equipment as specified in the Site Safety and Health Plan or otherwise.

2.0 A representative noise survey will be conducted with a sound level meter to characterize noise exposures at specific types of operations for the purpose of identifying those areas and equipment which have intensity levels of:

a. 85 dBA or greater for steady and/or intermittent noise.

b. 140 dB peak sound pressure or greater for impact/impulse noise.

c. NOTE: Intermittant noise impulses between 30 dBA and 130 dBA will be summed to determine action level accumulations.

3.0 If hazardous noise areas are identified, the Site Safety and Health Plan will require hearing protection for specific field employees performing operations in those areas.

4.0 Noise levels documented for specific types of machinery can be used to document whether or not all such equipment will result in affected employees being included in the Hearing Conservation Program. This will negate the need for repetitive sound level evaluations.

5.0 All personnel who routinely work in designated hazardous noise areas shall be identified and current records shall be maintained. Appropriate entries shall be made in the individual's medical records.

C. Noise Monitoring

1.0 Sound Level Meter

a) The sound level meter will confirm to the requirements for a Type I or, as a minimum, Type II sound level meter. Measurement will made using the A-weighing network and slow meter response at the appropriate position of the employee's ears. A sufficient number of readings will be made to account for variations in noise levels.

2.0 Dosimeters

a) A dosimeter will be used under conditions where there is a wide fluctuation of noise intensities and an accurate assessment of average employee exposure is necessary.

3.0 Acoustic Calibrator

a) The sound level meter (or dosimeter) will be calibrated before and after noise measurements with an acoustic calibrator on the day the measurements were made.

4.0 Annual Calibration

a) Both the sound level meter (or dosimeter) and acoustic calibrator must receive an annual comprehensive calibration by the factory, or an equivalent maintenance service.

D. Personal Hearing Protection Devices

1.0 Hearing protection devices shall be fitted, by the REHSM or designee, for each employee and issued at no cost to the employee.

2.0 Single and triple flanged preformed ear plugs must be fitted by qualified medical personnel.

3.0 Hand-formed disposable earplugs

a) The silicone plugs and foam plugs are hand-formed and are disposable. The foam earplugs must not be used in those environments where hazardous chemicals or vapors could be absorbed into the plug.

b) Adequate supplies of at least one type of hand-formed earplugs shall be maintained at hazardous areas, for visitors and individuals who do not have preformed earplugs or earmuffs in their possession.

c) Hand-formed earplugs do not require medical fitting or an inventory of multiple sizes. However, users will be adequately instructed.

d) Cutting hand-formed earplugs into halves is to be avoided since this will result in an inadequate mass and markedly reduced noise attenuation.

e) For hygienic reasons, hands must be clean when preparing hand-formed earplugs for insertion.

4.0 Earmuffs

a) Type II earmuffs are designed to be worn with the suspension system over the head, in back of the head, or under the chin.

b) Earmuffs can be readily seen by Field Supervisors, who will ensure their use.

c) When earmuffs are used, the headband must be properly adjusted to ensure a snug fit. A crown strap is provided with type II earmuffs and should be worn over the head whenever the muffs are worn with the suspension system in back of the head or under the chin.

d) When eyeglasses are worn with earmuffs, it is important that the earcup seals of the muffs fit well around the temples of the glasses. Even a small "leak" defeats the purposes of wearing the muffs.

e) Earmuffs with built-in radios designed for recreational listening must not be used in place of approved hearing protectors.

5.0 Steady-State Noise Exposure

a) Approved personal hearing protection devices must be issued to and used by all employees who work in designated hazardous noise areas or with hazardous noise equipment

where there are steady-state noise exposure levels of 85 dBA or greater.

b) Exceptions for short-term exposures is designated hazardous areas may be locally where all factors have been considered and approved by the REHSM.

c) Earplugs or earmuffs may attenuate steady-state noise from approximately 15 dB in the lower frequencies to approximately 35 dB in the higher frequencies.

d) When personnel work in areas where the steady-state noise levels are 110 dBA and above, the wearing of both earplugs and earmuffs is required. The combination provides approximately 5 to 10 dB more attenuation at most frequencies.

e) Occupancy in areas with steady-state noise levels of 120 dBA and above requires that hearing protection be worn in combination and that a limitation be placed on daily exposure time (administrative controls). The trade off rate between noise level and allowable daily exposure is 5 dB (on the A scale) for every halving of time.

f) Personnel occupancy in ares with steady-state noise levels above 140 dBA must be avoided regardless of the duration of exposure.

6.0 Impulse Noise Exposure

a) Measures for protecting hearing against impulse noise are the same as for steady-state noise. Protective

devices must be worn when impulse noise levels exceed 140 dBP. Occupancy in areas with impulse noise in excess of 165 dBP requires the wearing of earplugs and earmuffs in combination.

7.0 Care of Earplugs

a) Properly fitted earplugs will not cause damage to the normal ear canal provided the plugs are kept reasonably clean. Preformed earplugs (single and triple flange) and foam earplugs must be cleaned with a mild soap and rinsed thoroughly.

8.0 Replacement of Earplugs

a) The replacement of earplugs from being lost, misplaced, or have deteriorated through use will be replaced at no cost to employee.

b) Individuals must be checked at least annually to ensure fit and adequacy of the hearing protection.

E. Engineering Control Measures

1.0 Effective engineering noise controls shall be the primary means to protect personnel from the hazards of noise. All practical design approaches to reduce levels by acoustical engineering should be explored and used to reduce steady-state noise levels to below 85 dBA and impulse noise levels to below 140 dBP or to the maximum extent possible.

2.0 New equipment considered for purchase should have the lowest noise emission levels that are technologically and economically feasible and compatible with performance and environmental requirements.

3.0 Engineering can reduce potential noise levels. Some engineering steps are as follows:

a) Installation or use of mufflers and muffling devices on engines, machines, and work processes can be very helpful in reducing noise levels.

b) Equipment shrouds or covers help eliminate noise, and can protect workers from moving parts.

c) Selecting a work site, in a remote area, or in an area away from noisy equipment or processes, should be attempted whenever possible.

d) Proper maintenance of equipment, and the operation of equipment in accordance with specification and limits can keep operations from being noisier than they need to be.

e) Shutting down equipment when not in use, and establishing a work procedure which limits, the exposure time can significantly aid in preventing hearing loss.

f) The Site Safety Officer will take every step possible to limit or reduce noise hazards. When they have taken all preventive measures possible, and a hazard still exists, they will require workers to wear personal protective devices.

10.0 MEDICAL SURVEILLANCE:

A. General

1.0 Employees that participate in McLaren/Hart's Medical Surveillance Program (HS 10.0) will receive an audiometric exam annually.

2.0 Monitoring audiometry is a primary element of the Hearing Conservation Program. It is used identify the presence of early changes in hearing sensitivity. In connection with a history of all noise exposure including off-duty noise exposure, it is possible to determine with monitoring audiometry whether or not the issued hearing protectors are being properly used and/or if engineering controls are adequate. It may also be possible to identify individuals who are highly susceptible to noise-induced hearing loss.

3.0 The audiometric exams must be repeated more frequently if the physician suspects occupationally related hearing loss. The physician will decide if the hearing loss is occupationally related and if treatment is necessary.

4.0 All audiometric exams will be conducted by a licensed audiologist or an assistant under the supervision of an audiologist. The

audiometric examination must follow guidelines outlined in the Cal-OSHA noise standard (see attachment).

11.0 TRAINING REQUIREMENTS:

A. All personnel routinely employed in hazardous noise areas or with hazardous noise equipment must be periodically instructed regarding the following:

1.0 Permanent nature of noise-induced hearing loss

2.0 Type and proper use of personal protective measures

3.0 Nature of the McLaren/Hart's Hearing Conservation Program

4.0 Purpose of the audiometric examination

5.0 The symptoms that may be experienced before permanent hearing loss occurs

6.0 The importance of exposure control against non-occupational noise

B. A copy of the Cal-OSHA noise standard will be made available for employee review (see attachment).

12.0 RECORDKEEPING REQUIREMENTS:

A. Record pertaining to the Hearing Conservation Program shall be maintained for 40 years and must include:

1.0 Noise survey data and results of special noise studies that identify and define hazardous noise areas and equipment.

2.0 Records relative to disposition of personnel for whom administrative noise controls have been recommended and those who are being carefully monitored.

3.0 Special actions and/or recommendations which are directed at controlling potential or known hazardous noise exposure (e.g., engineering controls).

4.0 Data and information concerning the calibration and repair of sound-measuring equipment and audiometers.

5.0 Data and information on audiometric clinics, personal hearing protectors and auditory risk criteria.

6.0 Data and information for use in the education program of personnel exposed in hazardous noise areas.

B. Records and results of all audiometric examinations and all other pertinent information shall also be maintained.

1.0 Audiometric test results performed for hearing conservation purposes shall be a permanent part of the individuals's medical record.

2.0 Occupational noise exposure history shall be a permanent part of the individual's medical record. This also includes pertinent noise survey data. Obtain, as feasible, relevant non-occupational noise-exposure history and keep in the individual's medical record.

ATTACHMENT 1

Insert will follow.

ATTACHMENT 2

Insert will follow.

ATTACHMENT 9

ACCIDENT REPORTING AND INVESTIGATION

HEALTH AND SAFETY POLICY AND PROCEDURE

HS 8.0 ACCIDENT REPORTING AND INVESTIGATION

1.0 SUBJECT: Accident/Incident Reporting

2.0 EFFECTIVE DATE: September 1988

3.0 APPLICABILITY: All McLaren/Hart employees, including ChemRisk, Western Laboratory employees, and any other employees of entities acquired.

4.0 APPLICABLE REGULATIONS:

A. Federal

1. OSHA Regulation 29 CFR 1904

B. State

1. California
CCR Title 8, Article 3, § 342

5.0 DOCUMENTS ATTACHED:

29 CFR 1904; Accident/Incident Report; Accident Investigation Report; OSHA Form No. 200;
Sandoz Directive #8

6.0 DEFINITIONS:

A. Accident/Incident is an unexpected event that causes or reasonably could cause injury, illness or death to personnel or damage to property or the environment.

B. Accident, for the purpose of this policy, **accident** includes both accidents and incidents.

C. Major accident/incident (See Sandoz Directive #8).

WP1HS8.P8

7.0 GENERAL POLICY STATEMENT:

It is the Policy of McLaren/Hart to establish requirements and responsibilities for the reporting and investigation of accidents/incidents. All accidents/incidents must be reported to Corporate Human Resources within 24 hours of the event. Major accidents/incidents require special procedures pursuant to Sandoz Directive #8, including immediate reporting.

8.0 RESPONSIBILITIES:

A. **Corporate Environmental Health and Safety Manager** (CEHSM) shall appoint Accident Review Boards for accident cases when necessary.

The CEHSM or Regional Environmental Health and Safety Manager (REHSM) will investigate all accidents whenever it is deemed necessary due to the magnitude of the accident.

B. **Regional Environmental Health and Safety Manager** (REHSM)is responsible for immediate investigation of accidents.

A determination shall be made by the REHSM, in conjunction with the CEHSM, or by the attending physician, following OSHA record-keeping guidelines as to the recordability of the accident.

C. **Corporate Human Resources** shall maintain records of accidents for 5 years, regardless of recordability.

D. **Project Managers** directly responsible for the company or client property or personnel involved, assure the reporting of accidents to the REHSM and **Corporate Human Resources.**

E. **Field Supervisor/Site Safety Officer** is responsible for the immediate reporting of accidents involving employees to the Project Managers.

F. **Employees** are responsible for reporting all accidents/incidents to their immediate supervisors immediately, whenever practical, but in no case later than 24 hours of occurrence. In the event of serious injury or fatality, reporting must be immediate.

9.0 PROCEDURES:

A. Accidents are reported and investigated for the purpose of identifying causative factors and corrective measures to avoid similar occurrences and to comply with governmental requirements.

B. All accidents are reported regardless of the severity of the injury or the lack thereof. The attached Accident/Incident report must be completed by the Project Manager or designee within 24 hours of occurrence.

C. Corporate Human Resources at each office is the central reporting point for accidents. The REHSM and CEHSM must also be kept informed.

D. The Project Manager shall complete and file the Accident/Incident report with Human Resources and the REHSM within 24 hours of the accident or on the first work day following the accident; the Corporate Human Resources Department and CEHSM will receive copies of the "Accident/Incident Report" within 8 hours of receipt by Corporate Human Resources, within 24 hours of the accident, or on the first work day following the accident.

E. If an accident involves **hospitalization of five (5) or more employees or a fatality**, the REHSM must notify the Regional California Occupational Safety and Health Administration (CAL-OSHA) and CEHSM within 24 hours of the accident. This includes weekend days - 24 hour emergency reporting numbers are available. The report to the agency must include the following ten (10) items:

1) Time and date of accident.
2) Employer's name, address and telephone number.
3) Name and job title, or badge number of person reporting the accident.
4) Address of site of accident or event.
5) Name of person to contact at site of accident.
6) Name and address of injured employee(s).
7) Nature of injury.
8) Location where injured employee(s) was (were) moved to.
9) List and identity of other law enforcement agencies present at the site of accident.
10) Description of accident and whether the accident scene or instrumentality has been altered.

Additionally, reporting to Sandoz is required. See Sandoz Directive #8 (attached). ONLY the Vice President of Human Resources of the CEHSM is authorized to complete such reporting to Sandoz.

F. The CEHSM, REHSM and Corporate Human Resource Department shall review all Accident/Incident Reports and Accident Investigation Reports. All regional investigative material must be forwarded to Corporate Human Resources and the CEHSM.

1.0 A review of incidents will be made to determine the need for procedural and safety training improvements.

1.1 Classification for OSHA recordability shall be made to determine accuracy of the evaluation and compliance with 29 CFR 1904.

Major accident/incidents require special procedures, see Sandoz Directive #8 attached. Mary Lynn Hollingsworth is the designated spokesperson for all media and Sandoz correspondence.

10.0 MEDICAL SURVEILLANCE: NONE

11.0 TRAINING REQUIREMENTS:

A. Training sessions will be conducted for Regional Managers to assure Company wide consistency with OSHA recordkeeping regulations.

B. The REHSMs will be trained in accident reporting and investigation by the CEHSM.

12.0 RECORDKEEPING REQUIREMENT:

A. Corporate Human Resources shall keep a copy of the Accident Investigation Report and/or the Accident/Incident Report Form with the Worker's Compensation Claim forms for a period no less than five (5) years.

B. The log and summary OSHA No. 200 shall be maintained and updated as necessary for five (5) years. (See McLaren/Hart's OSHA Recordkeeping and Worker's Compensation, HS 9.0.)

C. Corporate Human Resources with cooperations from the REHSM will ensure that the previous year's log and summary OSHA No. 200 shall be posted in a public place from February 1 through March 1 as required by 29 CFR 1904.

ATTACHMENT 1

Insert will follow.

McLAREN ENVIRONMENTAL ENGINEERING

Accident Report Form

Date: _____ Vehicle YES |__| NO |__|
(If yes, complete Attachment 1).

Time: _____

Exact Location of Accident or Loss:

_____
Street, City, State

Employee(s)/Subcontractor(s)
(Circle One) Involved:

	Name	Social Security #	Date of Birth	D.L. #
1.				
2.				
3.				
4.				

Were those person(s) involved working on a McLaren Engineering project at the time of the accident?

YES |__| NO |__|

COMMENTS: _____

_____

_____

Were those person(s) involved traveling for McLaren Engineering at the time of the accident?

YES |__| NO |__|

COMMENTS: _____

_____

_____

Accident Description (Attach a separate sheet, if necessary):

_____

_____

_____

_____

Employee Statement (Attach a separate sheet, if necessary):

_____

_____

_____

_____

Was injury sustained by any of those person(s) involved? If yes, fill out Attachment 2.

YES |__| NO |__|

Law enforcement involvement? YES |__| NO |__|

What station? _____

If YES, complete the following (include officials name and affiliation):

Description _____

_____

_____

Were any citations issued? YES |__| NO |__|

Employee(s)/Subcontractor(s):

_____
Signature Date

_____
Signature Date

Project Manager:

_____
Signature Date

McLaren Automobile Insurance: Liberty Mutual Insurance Company, Policy #AS1-611-004145-058

ATTACHMENT 1 - VEHICLE ACCIDENT SUPPLEMENTAL INFORMATION

Vehicle(s) Involved: (Owner/Operator of Vehicle)

Vehicle I.D. #	Driver's License #	Vehicle License Plate #	McLaren Company Owned/Rented	Insurance Co. & Policy #
1				
2				
3				
4				

Passenger (s) Involved:

Vehicle I.D. #	Name	Address	Phone
1			( )
2			( )
3			( )
4			( )

Diagram the accident in the space provided. Indicate vehicle with the diagram numbers. Indicate approximate speed, weather condition, any other pertinent details.

Damage sustained: (McLaren vehicle, other vehicle, or property involved.)

Vehicle I.D. #	Vehicle Make & Model	Damage Description	Estimated Cost to Repair
1			
2			
3			
4			

Nature of damage other than vehicle:

_____

_____

ATTACHMENT 2 - INJURY ACCIDENT SUPPLEMENTAL INFORMATION
(Fill out one per person)

Injured Person: _____
Name, Address, Phone

Injury Sustained: _____

Emergency Services Required:

AMBULANCE YES |__| NO |__| COMPANY _____

PARAMEDICS YES |__| NO |__| AFFILIATION _____

FIRE DEPT. YES |__| NO |__| AFFILIATION _____

Hospitalization:

YES |__| NO |__| Where taken: _____

Lost Work Time:

YES |__| NO |__| AMOUNT: _____ Hours/Days/Weeks (Circle One)

Witnesses: _____
Name, Address, Phone

_____
Name, Address, Phone

_____
Name, Address, Phone

Comments: _____

_____

ATTACHMENT 4

Insert will follow.

Hart

EXPOSURE/INJURY INCIDENT REPORT

(submit a separate report for each incident, attach additional pages if needed)

Report Date_____
Employee/Subcontractor Name:_____ SS#_____-____-____
Sex: M __ F __ Date of Hire: _____ Date of Birth:_____
Title:_____ Length of time on Project:_____
Project Location (client, city, state, county): _____
_____

Date of Incident ___-___-___ Time of Incident_____ a.m. or p.m.
Lost Time? Yes___ No___ Estimated Date of Return:___-___-___
Employee Sent to: MD___ Hospital___ Home___ Remained working___
Medical Care Received: Yes___ No___ Where? On-site___ Off-site___
Treatment Offered but Declined:_____ (employee to initial)
If on-site, by whom?_____
If off-site, name facility (hospital, clinic, etc)_____
Length of stay at facility:_____
Treatment Rendered:_____
Nature of Injury: Chemical Exposure (specify chemical) _____
Contusion__ Cut__ Infection__ Irritation__ Puncture__ Strain___ Fracture__
Other_____
Body Part(s) Involved: (Be as specific as possible):_____
_____

Exact Location Incident Occurred:_____
_____
Incident Description:_____
_____
_____
_____
What was the employee doing when the incident occurred:_____
_____
Act(s) that caused or contributed to incident:_____
_____
Emergency Services Required: If yes, provide affiliation:_____
Ambulance___Paramedics___Fire Dept___Law Enforcement____
WITNESS(ES): Name (Provide address if witness is not an employee):
1._____ 2._____
_____ _____
_____ _____
Motor Vehicle Involved: Yes__ No__(if Yes, complete attached Accident Report)
Exposure to Toxic Materials or Radiation: Yes__ No__ Specify:_____

Reported By:_____ Date:_____

Fax to Corporate Human Resources, Rancho Cordova (916) 638-6840* within 24 hours
Fax to Lindene Wade, Director, Corporate H&S, Alameda, (415) 521-8410 within 24 hours
Copy to Office Health and Safety Manager within 24 hours

*These FAX numbers are to be used for confidential and emergency use only.

(Rev. 3/91)

INCIDENT INVESTIGATION REPORT

(Supervisor/Project Manager to complete)

Employee/Subcontractor Name:_____

List the names of other persons affected during the incident:_____

_____

What was employee doing when the incident occurred?_____

_____

What act(s) caused or contributed to incident?_____

_____

_____

_____

What condition(s) caused or contributed to the incident?_____

_____

_____

_____

Was the employee using protective clothing and equipment? (Describe)_____

_____

What action has been taken to prevent recurrence?_____

_____

_____

_____

Employee new to the job? Yes___ No___

What on-the-job training has the employee received?_____

_____

Was the employee informed of all the hazards associated with the job? Yes__No_

Are there site or job safety rules which are applicable to the employee's job?

Yes__No__

Does the employee know these safety rules? Yes__ No__

If No, Why?_____

Is there a written procedure for the employee's job? Yes__ No__

Does the written procedure mention hazards? Yes__ No__

Have these procedures been reviewed with the employee? Yes__ No__ If Yes, when? ___-___-____

Did accident occur on Overtime? Yes__ No__

List any other contributing factors:_____

_____

INVESTIGATED BY:

_____

Supervisor (Signature)

_____

Supervisor (Print or Type)

_____

Date

REVIEWED BY:

_____

Health and Safety Manager (Signature)

_____

Health and Safety Manager (Print or Type)

_____

Date