N00102.AR.001792
NSY PORTSMOUTH
5090.3a

# QUALITY ASSURANCE PROJECT PLAN FOR THE RESOURCE CONSERVATION AND RECOVERY ACT FACILITY INVESTIGATION NSY PORTSMOUTH ME

6/14/1991

MCLAREN HART ENVIRONMENTAL ENGINEERING

03 JUL REC'D

# ATTACHMENT A
# QUALITY ASSURANCE PROJECT PLAN
# FOR THE
# RCRA FACILITY INVESTIGATION
# AT THE
# PORTSMOUTH NAVAL SHIPYARD
# KITTERY, MAINE

PREPARED FOR:

UNITED STATES NAVY
NAVAL FACILITIES ENGINEERING COMMAND
PHILADELPHIA, PENNSYLVANIA

PREPARED BY:

McLAREN/HART ENVIRONMENTAL ENGINEERING CORPORATION
28 MADISON AVENUE EXTENSION
ALBANY, NEW YORK 12203

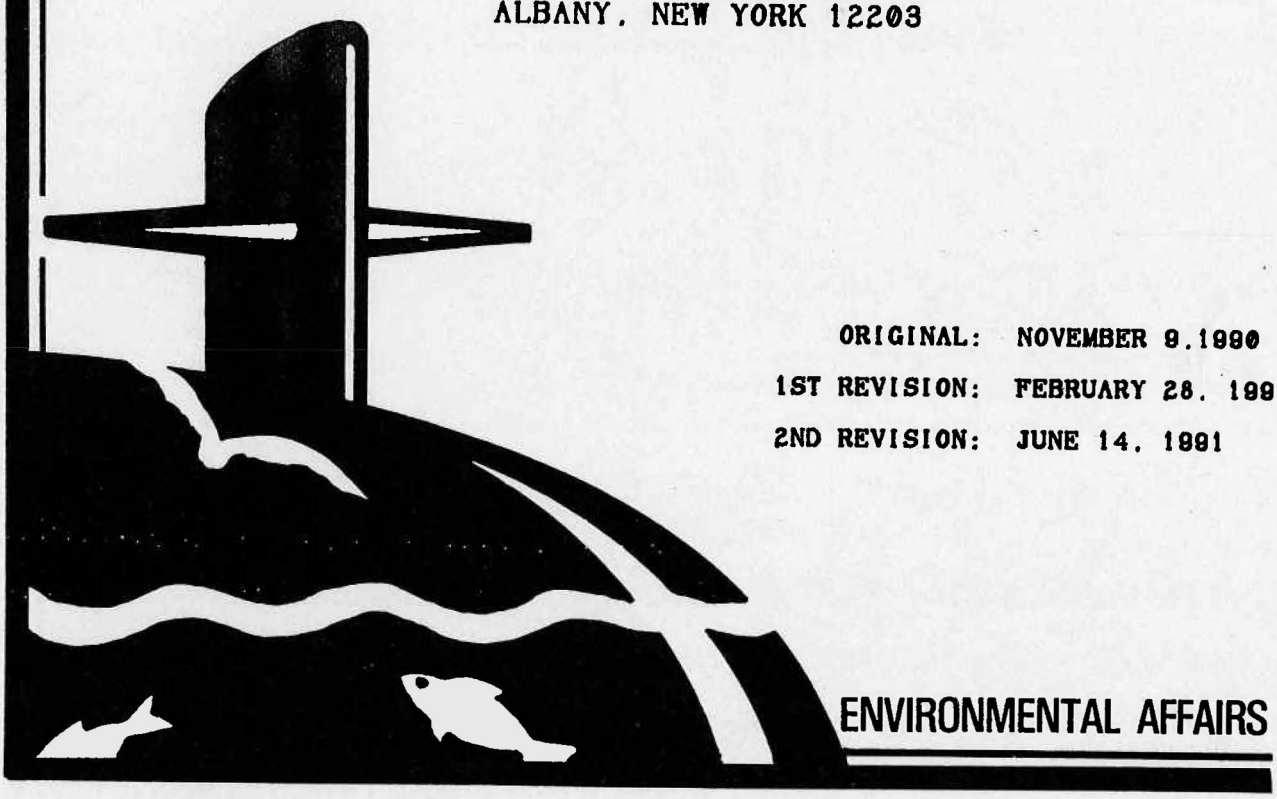


ORIGINAL: NOVEMBER 9,1990
1ST REVISION: FEBRUARY 28, 1991
2ND REVISION: JUNE 14, 1991

PORTSMOUTH NAVAL SHIPYARD

# QUALITY ASSURANCE PROJECT PLAN
# FOR THE
# RCRA FACILITY INVESTIGATION
# AT THE
# PORTSMOUTH NAVAL SHIPYARD
# KITTERY, MAINE


Prepared by:
McLaren/Hart Environmental Engineering Corporation
28 Madison Avenue Ext.
Albany, New York 12203


**Approved by:**

Project Director: 7/8/91
Stephen Myers (McLAREN/HART) Date

Project Manager: 7/8/91
Stephen Urschel (McLAREN/HART) Date

Quality Assurance Officer: 7/8/91
Donald Anné (McLAREN/HART) Date

**Reviewed by:**

Laboratory Quality Assurance Officer:

6/28/91
Art Paradice (RAI) Date

6/19/91
Dave Dickinson (Ceimic) Date

Laboratory Technical Director:

6/28/91
Russell Foster (RAI) Date

6/19/91
Kin Chiu (Ceimic) Date

# ATTACHMENT A
# QUALITY ASSURANCE PROJECT PLAN
# FOR THE
# RCRA FACILITY INVESTIGATION
# AT THE
# PORTSMOUTH NAVAL SHIPYARD
# KITTERY, MAINE

PREPARED FOR:

UNITED STATES NAVY
NAVAL FACILITIES ENGINEERING COMMAND
PHILADELPHIA, PENNSYLVANIA

PREPARED BY:

McLAREN/HART ENVIRONMENTAL ENGINEERING CORPORATION
28 MADISON AVENUE EXTENSION
ALBANY, NEW YORK 12203

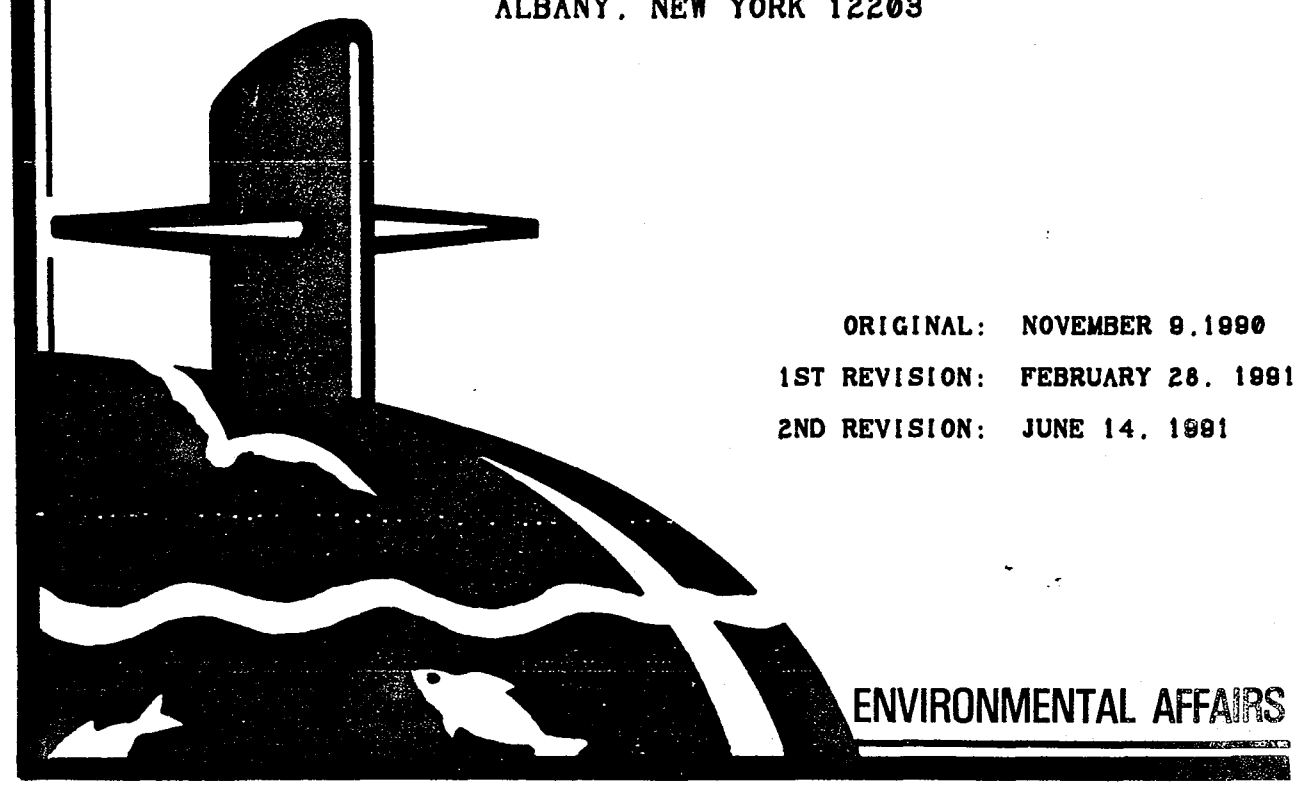

ORIGINAL: NOVEMBER 9,1990
1ST REVISION: FEBRUARY 28, 1991
2ND REVISION: JUNE 14, 1991

ENVIRONMENTAL AFFAIRS

PORTSMOUTH NAVAL SHIPYARD

## CONTENTS


| | | Page |
|---|---|---|
| 1.0 | Project Description | 1-1 |
| 2.0 | Project Organization and Responsibility | 2-1 |
| 3.0 | QA Objectives for Measurement Data | 3-1 |
| 4.0 | Sampling Procedures | 4-1 |
| 5.0 | Sampling Handling, Shipping and Custody | 5-1 |
| 6.0 | Equipment Calibration/Maintenance | 6-1 |
| 7.0 | Analytical Methodology | 7-1 |
| 8.0 | Data Reduction, Validation and Reporting | 8-1 |
| 9.0 | Internal Quality Control Checks | 9-1 |
| 10.0 | Quality Assurance | 10-1 |
| 11.0 | Specific Routine Procedures to Assess Precision, Accuracy and Completeness of Data | 11-1 |
| 12.0 | Corrective Action | 12-1 |
| 13.0 | Quality Assurance Reports to Management | 13-1 |

Appendix A: Orion Model 210 Digital pH Meter Manual
Appendix B: YSI Model 3000 T-L-C Meter Instruction Manual
Appendix C: RAI Quality Assurance Plan
Appendix D: RAI Analytical Methodologies for Total Phenols, Total Organic Carbon, Total Petroleum Hydrocarbons, and Grain Size
Appendix E: Ceimic Corp. Quality Assurance Plan
Appendix F: Ceimic Analytical Methodologies for Total Organic Carbon, Total Petroleum Hydrocarbons and Grain Size.

## List of Figures


| Figure | Title | Page |
|---|---|---|
| 1-1 | Location Map of Portsmouth Naval Shipyard | 1-3 |
| 1-2 | Made Land in Relation to the JILF and the DRMO | 1-5 |
| 2-1 | Project Organization | 2-2 |
| 5-1 | Chain of Custody | 5-6 |


## List of Tables


| Table | Title | Page |
|---|---|---|
| 3-1 | Summary of Precision, Accuracy and Completeness | 3-3 |
| 4-1 | Aqueous Sample Handling | 4-2 |
| 4-2 | Soil/Sediment Sample Handling | 4-3 |
| 7-1 | Analytical Methodology Summary | 7-2 |
| 7-2 | Summary of Analysis Parameters | 7-6 |
| 7-3 | Volatile Target Compound List and Contract Required Quantitation Limits | 7-7 |
| 7-4 | Semi-Volatile Target Compound List and Contract Required Quantitation Limits | 7-9 |
| 7-5 | Pesticide/PCB Target Compound List and Contract Required Quantitation Limits | 7-12 |
| 7-6 | CLP Detection Limits for Target Analyte List Compounds | 7-13 |
| 7-7 | Appendix IX Volatiles and Practical Quantitation Limits | 7-14 |
| 7-8 | Appendix IX Semi-Volatiles and Practical Quantitation Limits | 7-16 |
| 7-9 | Appendix IX Pesticide/PCBs and Practical Quantitation Limits | 7-20 |
| 7-10 | Appendix IX Herbicides and Practical Quantitation Limits | 7-21 |
| 7-11 | Appendix IX Inorganics and Practical Detection Limits | 7-22 |
| 7-12 | Method Detection Limits for Miscellaneous Parameters | 7-23 |
| 9-1 | Summary of Offshore QA/QC Samples | 9-3 |
| 9-2 | Summary of JILF QA/QC Samples | 9-4 |
| 9-3 | Summary of DRMO QA/QC Samples | 9-5 |
| 9-4 | Summary of Tank QA/QC Samples | 9-6 |

## Distribution List

| | |
|---|---|
| Stephen Myers | Project Director (McLAREN/HART) |
| Linda Resta | Project Coordinator (NAVFAC) |
| Ernest Waterman | Project Coordinator (EPA) |
| Donald Anné | Quality Assurance Officer (McLAREN/HART) |
| To be Determined | Quality Assurance Officer (EPA) |
| Art Paradice | Quality Assurance Officer (RAI) |
| Dave Dickinson | Quality Assurance Officer (CEIMIC) |
| James Tayon | Coordinator (PORTSMOUTH NAVAL SHIPYARD) |

## Preface

Two laboratories are referenced in this QAPP, Resource Analysts, Inc. (RAI) and Ceimic Corp. RAI analyzed samples for Phase I (October to December, 1989) and Phase II (August--September, 1990) field work. These phases of field work were performed before the submission of this QAPP to the Environmental Protection Agency (EPA) on November 9, 1990. Ceimic Corp. will be used for all field work performed after November 9, 1990 (Phase III and subsequent phases).

Fred C. Hart Associates, Hart Environmental Management Corp., and McLaren Environmental Engineering Corp., have merged to form McLaren/Hart Environmental Engineering Corporation (McLAREN/HART).

# SECTION 1.0: PROJECT DESCRIPTION

## INTRODUCTION

Any organization generating data has the responsibility to implement minimum procedures to assure that the precision, accuracy, completeness, representativeness and comparability of its data, are known and documented. To ensure that this responsibility is met uniformly, the Environmental Protection Agency (EPA) requires a written Quality Assurance Project Plan (QAPP) for each of its projects.

The QAPP herein presents the organization, objectives, activities, and specific Quality Control (QC) measures associated with the RCRA Facility Investigation for the Portsmouth Naval Shipyard, Kittery, Maine. This QAPP, in concert with the RCRA Facility Investigation Proposal (RFIP), is designed to achieve the data quality objectives of this project.

## PROJECT OBJECTIVE

The primary objective of the RCRA Facility Investigation (RFI) is to assess the potential releases of hazardous substances from thirteen Solid Waste Management Units (SWMUs) identified in the Hazardous and Solid Waste Amendments (HSWA) permit. If hazardous substances are identified in soil, sediment, or groundwater, it will be necessary to assess the risk imposed to human health or the environment. Additionally, the RFI has been designed to describe the hydrogeologic setting related to the SWMUs in order to understand potential migration pathways. All this information will be incorporated to support analysis of the feasible corrective measures, as necessary or appropriate, for each SWMU.

## SITE DESCRIPTION

The Portsmouth Naval Shipyard is located on Seavey's Island in the Piscataqua River immediately south of the town of Kittery, Maine. The location of the shipyard is shown in Figure 1-1. The shipyard is built on an area comprising Dennett's, Seavey's, Jamaica, and Clark's Islands, as well as made-land between these islands. Approximate elevations on-site range from sea level to a maximum of sixty feet. Two-thirds of the site is high-density industrial area containing 376 buildings, while the remaining areas are flat-lying to gently sloping grass-covered fields. Minor wooded areas exist on the east side of Jamaica Island.

The islands composing the Portsmouth Naval Shipyard are formed on bedrock highs with thin veneers of glacial till and recent alluvium. Bedrock consists of tectonically deformed middle Ordovician volcanics and the highly fractured metamorphosed sandstones, shales, and siltstone of Silurian age belonging to the Kittery Formation. Metamorphism has destroyed original interparticle porosity in the sedimentary rocks, therefore, groundwater flow is controlled by fractures. Groundwater levels at the Portsmouth Naval Shipyard are probably shallow and are likely controlled by the thickness of glacial till and fill material overlying bedrock or former tidal flat areas. The thickness of the overburden sediment will determine the amount of pore space available to retain fresh water from precipitation and subsequent percolation, thereby determining the extent and volume of the fresh water lens on the island. It is believed that groundwater flow directions on-site vary considerably depending on thickness and composition of overburden, bedrock-overburden contact-surface dip, and tidal influence. Specific flow directions at various locations on-site are unknown at this time.

FROM: USGS TOPOGRAPHIC 7.5MIN MAP SERIES;PORTSMOUTH QUADRANGLE, N.H.&ME. AND KITTERY QUADRANGLE, ME.&N.H.
SCALE 1:24,000

N

0 2,000FT
SCALE

QUADRANGLE LOCATION

QUADRANGLE LOCATION

**FIGURE 1-1**

**LOCATION MAP OF PORTSMOUTH NAVAL SHIPYARD**

**MCLAREN/HART**

## HISTORY

The shipyard is engaged in the conversion, overhaul, and repair of submarines for the U.S. Navy. The shipyard has a long history dating back to 1690 when the first warship launched in North America, the *Falkland*, was built. The Portsmouth Naval Shipyard was first established as a government facility in 1800. The yard served as a repair and building facility for ships during the Civil War. The first government-built submarine was designed and built at the yard during World War I and a large number of submarines were designed and constructed at the yard from 1917 to the present. The shipyard has continued servicing submarines to this day.

The shipyard is now composed of 376 buildings on 278 acres of land. As the work load at the shipyard expanded, fill material was used to create made-land adjacent to the original islands. Today, continuous land surface extends between three of the original four islands and much of the facility is built on fill overlying former tidal flats as shown in Figure 1-2.

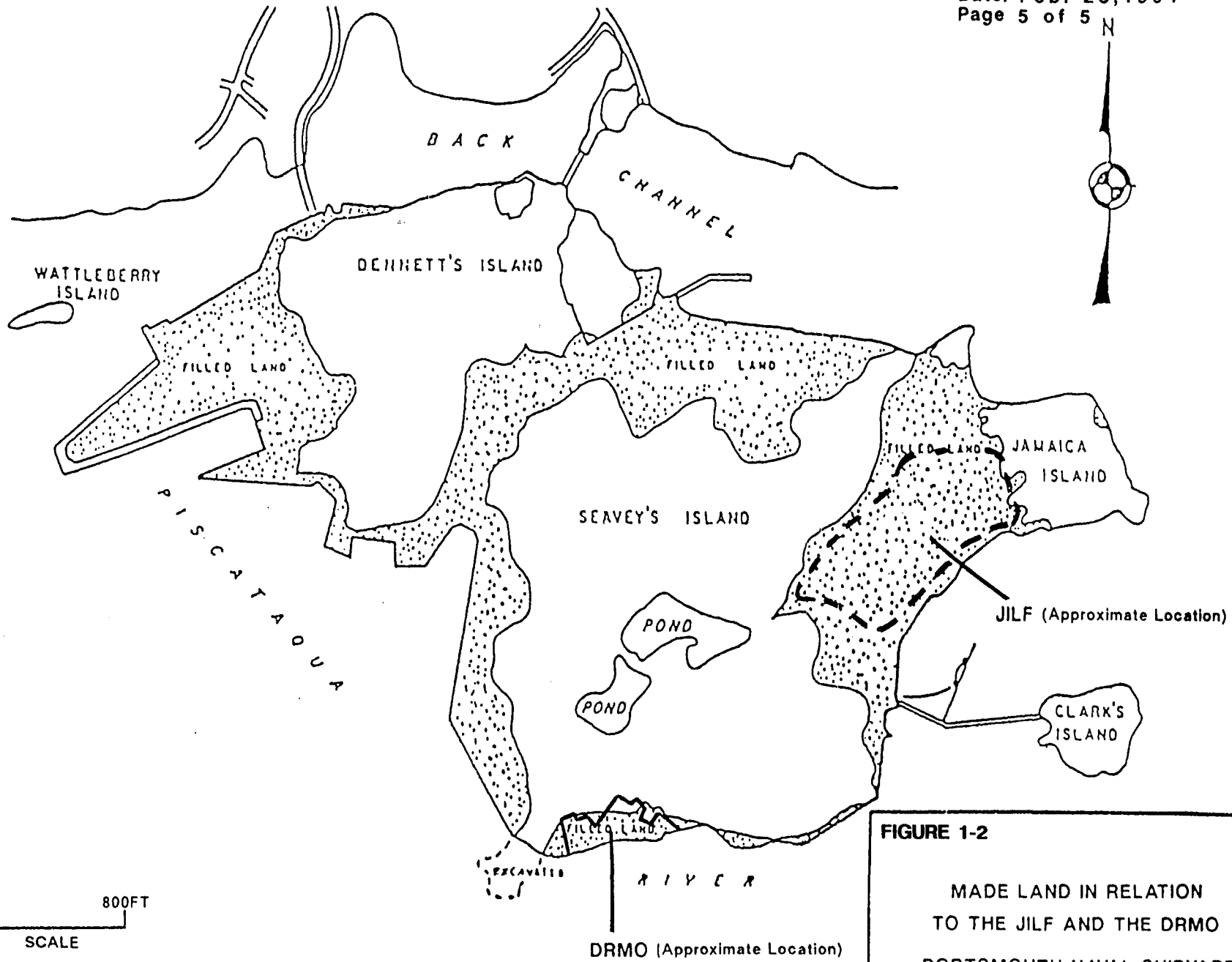


**FIGURE 1-2**

MADE LAND IN RELATION TO THE JILF AND THE DRMO

PORTSMOUTH NAVAL SHIPYARD

MCLAREN/HART

SOURCE: Portsmouth Naval Shipyard Environmental Engineering Department Archives

## SECTION 2.0: PROJECT ORGANIZATION AND RESPONSIBILITY

The individuals who are responsible for ensuring the collection of valid measurement data and the routine assessment of measurement systems for precision and accuracy include the project manager, the field team leader, the project and laboratory quality assurance officers and the technical reviewer. Figure 2-1 depicts the project organizational structure and the organizational relationships between the EPA Project Coordinator, NAVFAC's Project Coordinator, McLAREN/HART and its subcontractors. The responsibilities of the McLAREN/HART personnel filling these positions are detailed in the following subsections.

### PROJECT DIRECTOR

McLAREN/HART's Project Director will be Stephen Myers. Mr. Myers will be responsible for coordinating McLAREN/HART's implementation of the elements in the Proposal. The Project Director will serve as liaison between NAVFAC's Project Coordinator and the ongoing investigation. Additionally, the Project Director will be responsible for ensuring completion of the monthly reports as well as participating in meetings with the USEPA or its contractor during the course of the project.

### PROJECT MANAGER

McLAREN/HART's Project Manager will be Stephen Urschel. Mr. Urschel will be responsible for adherence to project schedules; preparation of monthly reports; reviewing and assessing the adequacy of the performance of technical staff and subcontractors assigned to the project; maintaining full orderly project documentation; interaction with NAVFAC

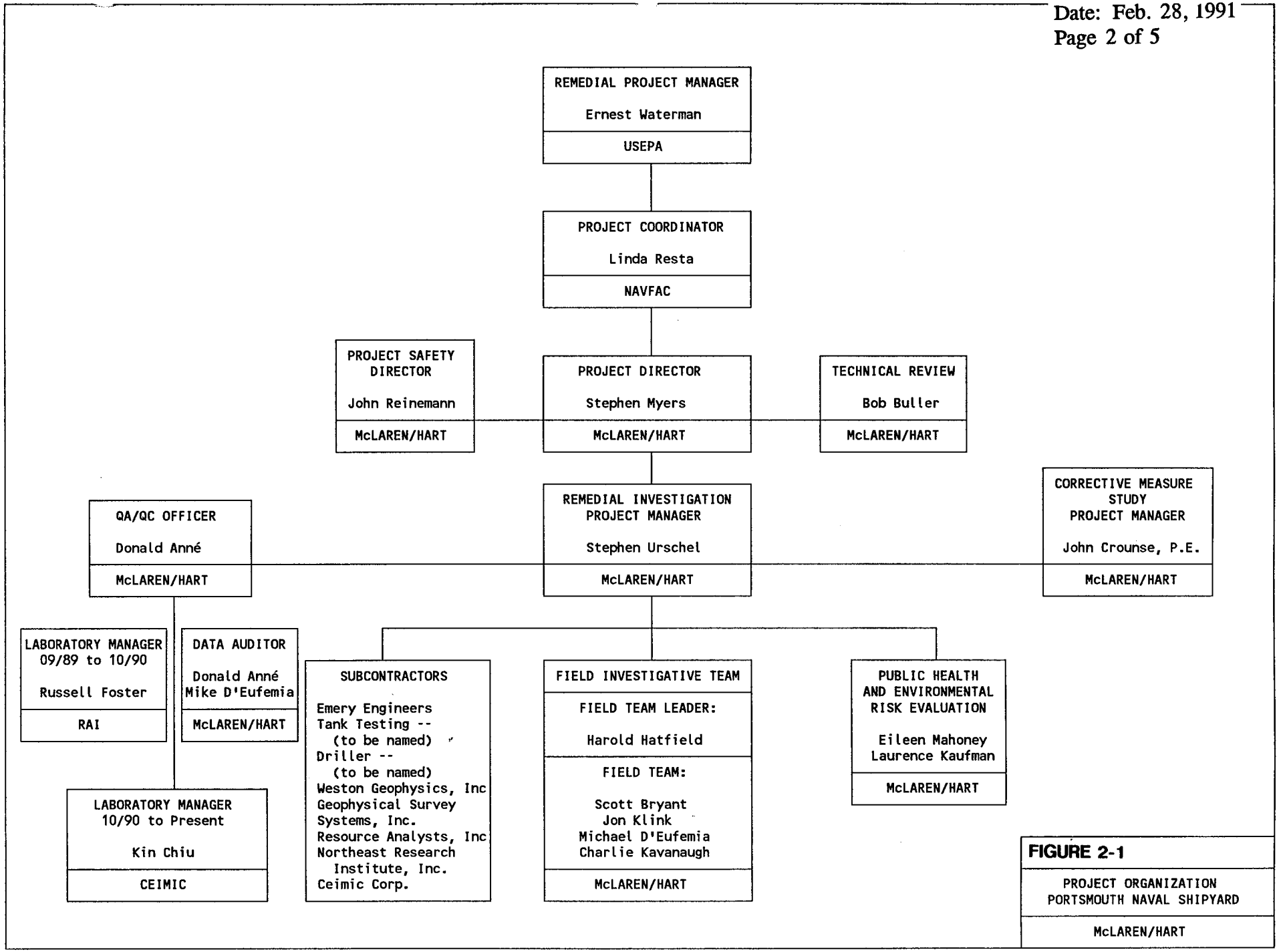


**FIGURE 2-1**

PROJECT ORGANIZATION
PORTSMOUTH NAVAL SHIPYARD

McLAREN/HART

and/or sampling plans. A report of the field audit shall be sent to the EPA Project Coordinator within fifteen (15) calendar days of completion of the audit. NAVFAC shall report serious QA deficiencies and corrective actions to be taken within twenty-four (24) hours of the time NAVFAC became aware of the deficiency.

## LABORATORY QUALITY ASSURANCE OFFICER

The selected laboratories for the RFI are Resource Analysts, Inc. (RAI) and Ceimic Corp. The Laboratory Quality Assurance Officers will be Art Paradice of RAI and Dave Dickinson of Ceimic. Mr. Paradice and Mr. Dickinson will be responsible for quality assurance procedures and QA checks in the laboratory and will ensure that laboratory protocols are strictly adhered to. RAI and Ceimic have participated in the Contract Laboratory Program, and have undergone laboratory audits by Martin-Marietta on behalf of the Navy.

## QC/SAMPLE TRACKING

The movement of each sample will be tracked from the time the sampling program begins until the final analytical data are assembled in the report. Test result reports and data management reports, including analytical results, quality control data, chain-of-custody, the appropriate chromatograms and spectra and any historical data, will be assembled by computer. Calculations will be given a final check by the laboratory senior analysts and/or laboratory managers. A data validation will be performed by the laboratory data review department.

and/or sampling plans. A report of the field audit shall be sent to the EPA Project Coordinator within fifteen (15) calendar days of completion of the audit. NAVFAC shall report serious QA deficiencies and corrective actions to be taken within twenty-four (24) hours of the time NAVFAC became aware of the deficiency.

## LABORATORY QUALITY ASSURANCE OFFICER

The selected laboratories for the RFI are Resource Analysts, Inc. (RAI) and Ceimic Corp. The Laboratory Quality Assurance Officers will be Art Paradice of RAI and Dave Dickinson of Ceimic. Mr. Paradice and Mr. Dickinson will be responsible for quality assurance procedures and QA checks in the laboratory and will ensure that laboratory protocols are strictly adhered to. RAI and Ceimic have participated in the Contract Laboratory Program, and have undergone laboratory audits by Martin-Marietta on behalf of the Navy.

## QC/SAMPLE TRACKING

The movement of each sample will be tracked from the time the sampling program begins until the final analytical data are assembled in the report. Test result reports and data management reports, including analytical results, quality control data, chain-of-custody, the appropriate chromatograms and spectra and any historical data, will be assembled by computer. Calculations will be given a final check by the laboratory senior analysts and/or laboratory managers. A data validation will be performed by the laboratory data review department.

## TECHNICAL REVIEWER

McLAREN/HART's technical reviewer will be Bob Buller. Mr. Buller will be responsible for providing review of project documents and reports with respect to technical adequacy and conformance to the scope of work. Documents such as drilling logs, well construction diagrams, cross-sections, contour maps, laboratory analytical data, and field data will be reviewed. The technical reviewer will also review monthly progress reports, the final report and any other interim reports issued during the course of the project.

## SECTION 3.0: QA OBJECTIVES FOR MEASUREMENT DATA

The overall QA objective is to develop and implement procedures for field sampling, chain-of-custody, field analysis, and laboratory analysis and reporting, that will provide legally defensible results in a court of law. Specific procedures to be used for sampling, chain-of-custody, calibration, field and laboratory analysis, reporting, internal quality control, audits, preventative maintenance, and corrective actions are described in other sections of this QAPP. The characteristics of major importance to quality measurement data are accuracy, precision, completeness, representativeness and comparability.

Before alternatives for remedial actions can be considered for the corrective measures study, there must be sufficient information available to develop, screen, and evaluate potential alternatives. The RFI will be performed to gather and assess information needed to accomplish the following:

- Augment existing data as necessary to determine the pathways of migration and degree of groundwater, surface water, and soil/sediment contamination.
- Assess and validate the data collected for use in the corrective measures study.
- Determine to what extent contamination at the site poses a threat to public health or the environment (Public Health and Environmental Risk Evaluation or PHERE).
- Identify and evaluate those remedial response actions which may be appropriate at this site.

## DATA ACCURACY AND PRECISION

Accuracy is the degree of agreement of a measurement with an accepted reference or true value and is a measure of bias in a system. Precision is a measure of mutual agreement among individual measurements of the same properties and is best expressed in terms of the standard deviation or relative percent difference (RPD). QA targets for accuracy and precision are stipulated in the "Standard Operating Procedure" (standard procedure) for each analytical parameter and summarized on Table 3-1. The standard procedures for analysis of parameters are discussed in Section 7 of this QAPP, Analytical Procedures.

Accuracy and precision of analytical results can be affected by interferences. Potential interferences can be expected from materials such as paint wastes (metals, phenolics, phthlate esters, solvents), scrap metals, spent batteries (metals, acid), electrical gear (PCBs and oil), oily wastes, degreasing operations (chlorinated solvents, oil) and sand blast grit (same as paint). In addition, the high salt concentration associated with the marine environment will interfere with analyses. These interferences may adversely impact both organic and inorganic analyses by biasing results negatively or positively. The magnitude of the biasing may be larger or smaller depending on the type and extent of interferents.

## DATA COMPLETENESS

Due to accessibility problems, the potential exists that less than 100 percent of the samples will be collected. It is expected that the laboratory will provide data meeting QC acceptance criteria for 90 percent or more of all samples analyzed (See Table 3-1). Laboratory data will be reviewed by the laboratory and project QA officer for completeness. Completely valid data are required for samples designated as "background samples". Corrective actions to achieve a complete data set may include any of the following: 1) reanalysis; 2) re-extraction; or 3) resampling.

TABLE 3-1

SUMMARY OF PRECISION, ACCURACY AND COMPLETENESS

| Parameter | Matrix | Precision RPD %[1] | Accuracy % of Recovery | Completeness (%) |
|---|---|---|---|---|
| Inorganic[2] | | | | |
| Aluminum | water | ± 20 | 75-125 | 90 |
| | solid | ± 35 | 75-125 | 90 |
| Antimony | water | ± 20 | 75-125 | 90 |
| | solid | ± 35 | 75-125 | 90 |
| Arsenic | water | ± 20 | 75-125 | 90 |
| | solid | ± 35 | 75-125 | 90 |
| Barium | water | ± 20 | 75-125 | 90 |
| | solid | ± 35 | 75-125 | 90 |
| Beryllium | water | ± 20 | 75-125 | 90 |
| | solid | ± 35 | 75-125 | 90 |
| Cadmium | water | ± 20 | 75-125 | 90 |
| | solid | ± 35 | 75-125 | 90 |
| Calcium | water | ± 20 | 75-125 | 90 |
| | solid | ± 35 | 75-125 | 90 |
| Chromium | water | ± 20 | 75-125 | 90 |
| | solid | ± 35 | 75-125 | 90 |
| Cobalt | water | ± 20 | 75-125 | 90 |
| | solid | ± 35 | 75-125 | 90 |
| Copper | water | ± 20 | 75-125 | 90 |
| | solid | ± 35 | 75-125 | 90 |
| Iron | water | ± 20 | 75-125 | 90 |
| | solid | ± 35 | 75-125 | 90 |
| Lead | water | ± 20 | 75-125 | 90 |
| | solid | ± 35 | 75-125 | 90 |
| Magnesium | water | ± 20 | 75-125 | 90 |
| | solid | ± 35 | 75-125 | 90 |
| Manganese | water | ± 20 | 75-125 | 90 |
| | solid | ± 35 | 75-125 | 90 |
| Mercury | water | ± 20 | 75-125 | 90 |
| | solid | ± 35 | 75-125 | 90 |
| Nickel | water | ± 20 | 75-125 | 90 |
| | solid | ± 35 | 75-125 | 90 |
| Potassium | water | ± 20 | 75-125 | 90 |
| | solid | ± 35 | 75-125 | 90 |
| Selenium | water | ± 20 | 75-125 | 90 |
| | solid | ± 35 | 75-125 | 90 |
| Silver | water | ± 20 | 75-125 | 90 |
| | solid | ± 35 | 75-125 | 90 |
| Sodium | water | ± 20 | 75-125 | 90 |
| | solid | ± 35 | 75-125 | 90 |
| Thallium | water | ± 20 | 75-125 | 90 |
| | solid | ± 35 | 75-125 | 90 |

TABLE 3-1 (Continued)

SUMMARY OF PRECISION, ACCURACY AND COMPLETENESS

| Parameter | Matrix | Precision RPD % (1) | Accuracy % of Recovery | Completeness (%) |
|---|---|---|---|---|
| Tin | water | ± 20 | 75-125 | 90 |
| | solid | ± 35 | 75-125 | 90 |
| Vanadium | water | ± 20 | 75-125 | 90 |
| | solid | ± 35 | 75-125 | 90 |
| Zinc | water | ± 20 | 75-125 | 90 |
| | solid | ± 35 | 75-125 | 90 |
| Cyanide | water | ± 20 | 75-125 | 90 |
| | solid | ± 35 | 75-125 | 90 |
| Sulfide | water | ± 20 | 75-125 | 90 |
| | solid | ± 35 | 75-125 | 90 |
| Organics[3] | | | | |
| Volatiles | | | | |
| 1,1-Dichloro- | water | ± 14 | 61-145 | 90 |
| ethene | solid | ± 22 | 59-172 | 90 |
| Trichloro- | water | ± 14 | 71-120 | 90 |
| ethene | solid | ± 24 | 62-137 | 90 |
| Benzene | water | ± 11 | 76-127 | 90 |
| | solid | ± 21 | 66-142 | 90 |
| Toluene | water | ± 13 | 76-125 | 90 |
| | solid | ± 21 | 59-139 | 90 |
| Chlorobenzene | water | ± 13 | 75-130 | 90 |
| | solid | ± 21 | 60-133 | 90 |
| Semi-Volatiles[4] | | | | |
| Phenol | water | ± 42 | 12-89 | 90 |
| | solid | ± 35 | 26-90 | 90 |
| 2-Chloro- | water | ± 40 | 27-123 | 90 |
| phenol | solid | ± 50 | 25-102 | 90 |
| 1,4-Dichloro- | water | ± 28 | 36-97 | 90 |
| benzene | solid | ± 27 | 28-104 | 90 |
| N-Nitroso- | water | ± 38 | 41-116 | 90 |
| di-n-propyl- amine | solid | ± 38 | 41-126 | 90 |
| 1,2,4-trichloro | water | ± 28 | 39-98 | 90 |
| benzene | solid | ± 23 | 38-107 | 90 |
| 4-Chloro-3- | water | ± 42 | 23-97 | 90 |
| methylphenol | solid | ± 33 | 26-103 | 90 |
| Acenaphthene | water | ± 31 | 46-118 | 90 |
| | solid | ± 19 | 31-137 | 90 |
| N-Nitrophenol | water | ± 50 | 10-80 | 90 |
| | solid | ± 50 | 11-114 | 90 |
| 2,4-Dinitro- | water | ± 38 | 24-96 | 90 |
| phenol | solid | ± 47 | 28-89 | 90 |

TABLE 3-1 (Continued)

SUMMARY OF PRECISION, ACCURACY AND COMPLETENESS

| Parameter | Matrix | Precision RPD % (1) | Accuracy % of Recovery | Completeness (%) |
|---|---|---|---|---|
| Pentachloro- | water | ± 50 | 9-103 | 90 |
| phenol | solid | ± 47 | 17-109 | 90 |
| Pyrene | water | ± 31 | 26-127 | 90 |
| | solid | ± 36 | 35-142 | 90 |
| Pesticides/PCBs | | | | |
| gamma-BHC | water | ± 15 | 56-123 | 90 |
| | solid | ± 50 | 46-127 | 90 |
| Heptachlor | water | ± 20 | 40-131 | 90 |
| | solid | ± 31 | 35-130 | 90 |
| Aldrin | water | ± 22 | 40-120 | 90 |
| | solid | ± 43 | 34-132 | 90 |
| Dieldrin | water | ± 18 | 52-126 | 90 |
| | solid | ± 38 | 31-134 | 90 |
| Endrin | water | ± 21 | 56-121 | 90 |
| | solid | ± 45 | 42-139 | 90 |
| 4,4'-DDT | water | ± 27 | 38-127 | 90 |
| | solid | ± 50 | 23-134 | 90 |
| Herbicides | | | | |
| 2,4-D | water | ± 30 | 50-150 | 90 |
| | solid | ± 50 | 50-150 | 90 |
| 2,4,5-TP (Silvex) | water | ± 30 | 50-150 | 90 |
| | solid | ± 50 | 50-150 | 90 |
| 2,4,5-T | water | ± 30 | 50-150 | 90 |
| | solid | ± 50 | 50-150 | 90 |
| Total Organic Carbon (TOC) | solid | ± 35 | 75-125 | 90 |
| Total Petroleum Hydrocarbons (TPH) | solid | ± 35 | 75-125 | 90 |
| Total Phenol | solid | ± 35 | 75-125 | 90 |

1 RPD = Relative Percent Difference. Precision Limits for organic analyses are advisory only.

2 For special requirements of inorganic precision and accuracy, see Exhibit E of the CLP Statement of Work, Feb. 1989 revision. These are the same requirements for Appendix IX compounds.

3 The indicated percent recovery range represents the minimum and maximum acceptable value for the indicated U.S. EPA CLP compounds. Consult Exhibit E of the CLP Statement of Work for Organics, Multi-Media, Multi-Concentration, U.S. EPA Feb. 1988. These are the same requirements for Appendix IX compounds.

4 Polynuclear Aromatic Hydrocarbons (PAH) are a subset of semi-volatiles. The base/neutral fraction of semi- volatiles applies to PAH analyses.

## DATA REPRESENTATIVENESS

Representativeness expresses the degree to which the samples analyzed are reasonably representative of the environmental conditions. The representativeness of the data from a sampling site depends on the sampling location selection method and sampling procedures. The sampling procedures, as described in the RFIP document, have been selected with the goal of obtaining representative samples for each of the media (i.e., solid, aqueous, and air). Sampling locations have been chosen to provide a valid approximation of the nature, types, and quantities of inorganic and/or organic constituents at the site. A rationale for sampling location selection is provided in the RFIP.

Representativeness of the analytical data is a function of the procedure used in processing the samples. Representativeness is established by the use of standard and/or validated sampling methods as described in the RFIP.

## DATA COMPARABILITY

Analytical results are comparable to results of other laboratories because of the following procedures/programs: instrument standards traceable to National Institute of Science and Technology or EPA sources; use of standard or validated methodology; reporting of results from similar matrices in consistent units; applying appropriate levels of quality control within the context of the laboratory quality assurance program; and participation, as appropriate, in inter-laboratory studies to document laboratory performance. Comparability can be related to precision and accuracy as these quantities are measures of data reliability.

There are limitations to the comparability of data from different sampling events or when different analytical methods are used. However, the methods used for the collection and analysis of samples from this site, as documented in the RFIP and this QAPP, should provide comparable data.

Standard analytical methods from SW-846 or as referenced in this QAPP, will be used for the analysis of all samples. This will minimize variability which could occur during the analysis of samples, and provide data which are generated by the same analytical, quality assurance and data reduction techniques. All samples will be collected according to standard field sampling procedures as outlined in the RFIP. This will ensure that the same field procedures are employed throughout the project duration by all personnel involved. Standardization of both field and laboratory procedures increases data comparability.

The use of standard reporting units allows for the comparison of data from samples of the same matrix. All aqueous sample analysis results will be reported in ug/L (ppb) or mg/L (ppm). All soil and sediment sample analysis results will be reported in ug/kg (ppb) or mg/kg (ppm).

# SECTION 4.0: SAMPLING PROCEDURES

## SAMPLING PROCEDURES

The RFIP addresses detailed sampling concerns such as description of decontamination procedures, sample location, work schedule, rationale for number of samples, and description of sampling devices. These procedures are described in the following sections of the RFIP:

- Section 1.4 Solid Waste Management Units
- Section 4.0 Soils Investigation
- Section 6.0 Hydrogeologic Monitoring Plan
- Section 7.0 Subsurface Gas Characterization
- Section 8.0 Sediment Characterization
- Section 9.0 Tank Investigation
- Section 14.0 Project Management Plan

The types of containers used for soil/sediment, sludge, free liquid and water samples for specified analyses, as well as the required preservation and applicable holding times, are detailed in Table 4-1 and 4-2.

At the request of the EPA, McLAREN/HART shall allow the collection of split or duplicate samples, to be taken by the EPA or its authorized representatives, of any samples collected by McLAREN/HART, pursuant to the approved Statement of Work (SOW) and/or Work Plans (WP). McLAREN/HART shall notify the NAVFAC Project Coordinator who will notify the EPA not less than ten (10) days in advance of any such sample collection activity. The EPA shall allow split or duplicate samples to be taken by McLAREN/HART or its authorized representatives, of any samples collected by the EPA that relate to matters referenced in the SOW or approved WP. The EPA shall give NAVFAC ten (10) days notice of its proposed sampling date.

Table 4-1. Aqueous and Free Liquid Sample Handling

| Parameter | Media | Container | Sample Preservation | Holding Time |
|---|---|---|---|---|
| Volatiles | Grab | 40 ml glass vials with teflon-lined septums | Cool at 4°C Acidify to pH<2 with HCl | 14 days, if unpreserved, 7 days |
| Semi-Volatiles | Grab | One liter amber glass bottles with Teflon-lined caps | Cool at 4°C | 7 days until extraction; analysis within 40 days of extraction |
| TCL Pesticides/ PCBs | Grab | One liter amber glass bottles with Teflon-lined caps | Cool at 4°C | 7 days until extraction; analysis within 40 days of extraction |
| Herbicides | Grab | One liter amber glass bottles with Teflon-lined caps | Cool at 4°C | 7 days until extraction; analysis within 40 days of extraction |
| Metals | Grab | One liter polyethylene bottles | Cool at 4°C Acidify to a pH < 2 with $HNO_3$ | 6 months* |
| Cyanide/Sulfide | Grab | One liter glass bottles or polyethylene | Cool at 4°C Addition of NaOH to a pH > 12 | 14 days |

* - Holding time for mercury is 28 days.
All holding times are from date of sampling.
Volatiles include Appendix IX and Target Compound List (TCL) compounds.
Semi-Volatiles include Appendix IX, TCL, and Polynuclear Aromatic Hydrocarbon compounds.
Pesticides/PCB's includes Appendix IX and TCL compounds.
Herbicides include Appendix IX compounds.
Metals include Appendix IX, Target Analyte List, Priority Pollutant and RCRA metals.

Table 4-2. Soil/Sediment and Sludge Sample Handling

| | Sample Type | Container | Sample Parameter Preservation | Holding Time |
|---|---|---|---|---|
| Volatiles | Grab | 40 ml glass vials with teflon-lined septums | Cool at 4°C | 14 days |
| Semi-Volatiles | Grab | 8 oz glass bottles with Teflon-lined caps | Cool at 4°C | 14 days until extraction; analysis within 40 days of extraction |
| Pesticides/PCBs | Grab | 8 oz glass bottles with Teflon-lined caps | Cool at 4°C | 14 days until extraction; analysis within 40 days of extraction |
| Herbicides | Grab | 8 oz glass bottles with Teflon-lined caps | Cool at 4°C | 14 days until extraction; analysis within 40 days of extraction |
| Metals | Grab | 8 oz glass bottles | Cool at 4°C | 6 months* |
| Cyanide/Sulfide | Grab | 8 oz glass bottles | Cool at 4°C | 14 days* |
| Total Phenols | Grab | 8 oz glass bottles with Teflon-lined caps | Cool at 4°C | 28 days* |
| Total Organic Carbon (TOC) | Grab | 8 oz glass bottles with Teflon-lined caps | Cool at 4°C | 28 days* |
| Total Petroleum Hydrocarbons (TPH) | Grab | 8 oz glass bottles with Teflon-lined caps | Cool at 4°C | 28 days* |

* - Recommended holding time, recommended holding time for mercury is 28 days.
All holding times are from date of sampling.
Volatiles include Appendix IX and Target Compound List (TCL) compounds.
Semi-Volatiles include Appendix IX, TCL, and Polynuclear Aromatic Hydrocarbon compounds.
Pesticides/PCB's includes Appendix IX and TCL compounds.
Herbicides include Appendix IX compounds.
Metals include Appendix IX, Target Analyte List, Priority Pollutant and RCRA metals.

# SECTION 5.0: SAMPLE HANDLING, SHIPPING AND CUSTODY

## FIELD DOCUMENTATION

Following sampling, the sealed sample container, as specified in Table 4-1 and 4-2, will be wiped with a moist paper towel, dried and labeled. The sample labels will contain, at a minimum, the following information:

- Media
- Sample ID Number
- Sample Location
- Name of Sampling Personnel
- Name of Sampling Organization
- Date and Time Sampled
- Type of Preservative, if any
- Analysis Requested.

Sample labels will be completed in indelible ink. Following labeling, sample containers will be packed in coolers for storage and shipment. At least two bags of ice, sealed in double plastic bags, or four frozen gel packs, will be placed in each cooler and cushioned using vermiculite, foam rubber, or other similar packaging material to maintain all samples at 4°C. Samples will be packaged, labeled, and transported in conformance with all applicable federal, state, and local regulations.

A sample ID labeling scheme has been developed for clarity, consistency, continuity and for easy data sorting for all RFI field activities. The sample ID labeling scheme differentiates among sample sources (matrix type), sample location, and sampling round.

The two or three letter prefix represents the sample matrix type (e.g., JW-JILF groundwater, DSB-DRMO soil boring). The first set of numbers indicate sample location (two or three digit number). A third space is reserved for indicating the shallow (S), deep (D) and bedrock (B) well in nested wells.

The suffixed set of numbers, when present, represent sampling round. For the first round of sampling, the suffix is not needed because no suffix is being designated as round 01. For the second round of sampling and all subsequent rounds, a suffix number is required (02-99, must use two digit numbers).

| | | |
|---|---|---|
| Example 1: | Test pit #1, 3rd round | TP-01-03 |
| Example 2: | Surface soil sample #10, 1st round | SS-10 |
| Example 3: | JILF Monitor well #4, 2nd round | JW-04-02 |

The only samples which will have added numbers are soil borings. Soil borings should include the depth interval at which they are sampled. The depth is placed in parenthesis at the end of the first set of numbers. All depths will be recorded as feet below grade.

| | | |
|---|---|---|
| Example 4: | DRMO Soil boring #2, split-spoon, collected at a depth of 12-14 feet. | DSB-02 (12'-14') |

Trip blanks will be labeled using the prefix TB- followed by six numbers representing the month, day and year that the trip blank was shipped to the laboratory.

| | | |
|---|---|---|
| Example 5: | Trip blank that accompanied samples shipped on November 18, 1988. | TB-111888 |

This sample ID labeling scheme should be used for all McLAREN/HART field investigations.

Field log books will provide the means of recording data collection activities performed. Entries into the field log book will be described in as much detail as possible, so that someone visiting the site could reconstruct a particular situation without reliance on memory.

Field log books will be bound field survey notebooks. Log books will be assigned to field personnel for recording pertinent notes and will be stored in the field project file when not in use. Each log book will be identified by a project specific number. The title page of each notebook will contain 1) person or organization to whom the book is assigned; 2) the book number; 3) project name; and, 4) start and end dates.

Measurements made and samples collected will be recorded in field log books. All entries will be made in waterproof ink and no erasures will be made. If an incorrect entry is made, the information will be crossed out with a single strike mark and initialed. Whenever a sample is collected or a measurement is made, a detailed description of the location of the station, which includes distance measurements from permanent landmarks, will be recorded. The number of photographs taken of the station will also be documented. All equipment used to make measurements will be identified, along with the date and person doing the calibration. All persons involved with the sampling must be identified in the field log book.

## SAMPLE CUSTODY

A sample is under custody if:

- It is in your possession, or
- It is in your view, after being in your possession, or
- It was in your possession and you locked it up, or
- It is in a designated secure area.

A chain-of-custody record is a tool to document traceable possession from time of collection until sampled data is introduced as evidence in legal proceedings. The field sampler is personally responsible for the care and custody of the samples collected until they are properly transferred or dispatched. The Field Team Leader is responsible for assuring that proper custody procedures are followed during the field work.

When transferring the possession of samples, the individuals relinquishing and receiving will sign, date, and note the time on a chain-of-custody form. These records document sample custody transfer from the sampler to the analyst in the laboratory.

When samples are split with a source or government agency, a separate chain-of-custody form is prepared for those samples and marked to indicate with whom the samples are being split. The person relinquishing the samples to the facility or agency should request the signature of a representative of the appropriate party acknowledging receipt of the samples. If a representative is unavailable or refuses to sign, this is noted in the "Received by" space. When appropriate, as in the case where the representative is unavailable, the custody record should contain a statement that the samples were delivered to the designated location at the designated time.

All shipments will be accompanied by the chain-of-custody record identifying contents of the shipment. The following information will be specified for each sample on the chain-of-custody form: 1) sequential sample number; 2) sample media; 3) sample date and time; 4) sample location; and, 5) analyses requested. A sample chain-of-custody form is provided in Figure 5-1.

The original form will accompany the cooler containing the samples designated on the form. Sample coolers will be hand delivered to the analytical laboratory.

## LABORATORY DOCUMENTATION

The preparation of all sample containers (i.e., cleaning, addition of preservatives) prior to their use is described in Appendix C for RAI and Appendix E for Ceimic.

Upon arrival at the laboratory, samples will be checked by the laboratory representative and cooler temperature and pH of samples perserved with acid will be checked and documented. All samples contained in the shipment will be compared to the chain-of-custody form to ensure that all samples designated have been received. Sample custody within the laboratory includes:

FIGURE 5-1

HART

Name: _____
Affiliation: _____
Phone: _____
Address: _____
Client/Job No: _____
Job Name: _____ Location: _____

## CHAIN OF CUSTODY RECORD

| Sample No. | Lab I.D. No. | Date | Time | Matrix | No. of Containers | Analysis Requested/Remarks |
|---|---|---|---|---|---|---|
| | | | | | | |
| | | | | | | |
| | | | | | | |
| | | | | | | |
| | | | | | | |
| | | | | | | |
| | | | | | | |
| | | | | | | |
| | | | | | | |
| | | | | | | |

Comments: _____

Relinquished by: _____ Date: _____ Shipment Method: _____
Time: _____ Airbill No.: _____

Received by: _____ Date: _____ Relinquished by: _____ Date: _____
Time: _____ Time: _____

Received by: _____ Date: _____ Relinquished by: _____ Date: _____
Time: _____ Time: _____

Final Disposition of Samples: _____

Received by: _____ Date: _____ Time: _____

HART Form 400 Pink/Field Copy - Yellow/Lab Copy - White/Original - To be returned with results.

**LABORATORY DOCUMENTATION (Continued)**

- Identification of responsible party to act as sample custodian at the laboratory facility authorized to sign for incoming field samples, obtain documents of shipment and verify the data entered onto the sample custody records.
- Provision for a laboratory sample custody log consisting of serially numbered standard lab-tracking report sheets.
- Specifications of laboratory sample custody procedures for sample handling, storage, and dispersement for analysis.

Soil, sediment and groundwater samples for inorganics analyses will be retained by the laboratory to provide an opportunity for retesting, if necessary, for a period of three months after analysis or until permission to discard is received. Samples must be protected from light and refrigerated at 4°C until extraction. Soil, sediment and groundwater samples for organics analyses will be properly disposed of by the laboratory once the applicable holding times have been exceeded.

**PROJECT DOCUMENTATION**

A project file will be maintained by the Project Manager which will contain complete project documentation. This file will include: project plans and specifications; field log books and data records; photographs; maps and drawings; sample identification documents; chain-of-custody records; the entire analytical data package provided by the laboratory including QC documentation; copies of raw data computer printouts; gas chromatograms; mass spectra; data validation notes; references and literature; report notes and calculations; progress and technical reports; correspondence; and other pertinent information.

## SECTION 6.0: EQUIPMENT CALIBRATION/MAINTENANCE

A maintenance, calibration, and operation program is implemented to ensure that routine calibration and maintenance is performed on all field instruments. The program provides equipment of the proper type, range, accuracy, and precision to provide data compatible with the specified requirements and desired results. Calibration of measuring and test equipment is performed internally using in-house reference standards or externally by agencies or manufacturers.

### RESPONSIBILITY

The project quality assurance officer is responsible for ensuring that the field instruments used in this RFI are calibrated and maintained according to manufacturer's specifications. Field instrument manuals describing calibration, maintenance, and field operating procedures for these instruments are provided in Appendices A and B for easy reference by field personnel and government project personnel. In the case of the salinity-conductivity-temperature (S-C-T) meter, operation and maintenance instructions are printed on the back of the meter.

Team members are familiar with the field calibrations, operation and maintenance of the equipment, and will perform the prescribed field operating procedures outlined in the operation and field manuals accompanying the respective instruments. They will keep records of all field instrument calibrations and field checks in the field log books.

## CALIBRATION PROCEDURES

The pH meter will be calibrated in accordance with EPA Method 150.1 which states, "Follow the manufacturers instructions for a two point calibration because of the wide diversity in instruments" (See Appendix A). The calibration of the S-C-T and temperature-water level-conductivity (T-L-C) meters will be as per *Standard Methods For The Examination of Water and Wastewater, 16th Edition* for non-platinum electrodes. McLAREN/HART modifies this procedure to check the instrument against a standard instead of a reading from a laboratory grade instrument. When calibrating, the T-L-C meter will be set on the temperature compensation function (corrects readings to 25°C). The S-C-T meter will be set to the temperature of the sample for both calibration and field readings.

Equipment that fails calibration or becomes inoperable during use, shall be removed from service and tagged to prevent inadvertent use. If on-site monitoring equipment should fail, the Site Safety Officer will be contacted immediately and will either provide replacement equipment or have the malfunction repaired immediately.

Records shall be prepared and maintained for each piece of calibrated measuring and test equipment to indicate that established calibration procedures have been followed (e.g. results of calibration, problems, corrective action). Records for field equipment used only for this specific project shall be kept in the project files.

## PREVENTATIVE MAINTENANCE

Periodic preventative maintenance is required for sensitive equipment. Instrument manuals are kept on file for reference purposes should equipment need repair. Troubleshooting and preventative maintenance sections of manuals are often useful in assisting personnel in performing maintenance tasks (see Appendices A and B).

## SECTION 7.0: ANALYTICAL METHODOLOGY

The analytical methodology sources are summarized in Table 7-1. Table 7-2 provides a summary of analytical parameters and holding times for soils and surface waters. Organic analytical methods will follow *Test Methods for Evaluating Solid Wastes, Physical/Chemical Methods, SW-846, 3rd Edition (EPA SW-846 3rd Edition)* with updates. The identification and quantification of the volatile and semi-volatile TCL compounds in the samples are performed by GC/MS. GC/EC analysis is utilized for the identification and quantification of pesticides/PCB TCL compounds in samples. In addition, the 20 highest non-TCL semi-volatile peaks and 10 highest non-TCL volatile peaks are tentatively identified and the concentration estimated, using a forward search of the EPA/NIH Mass Spectral Library. Contract Required Quantitation Limits (CRQL) are found in Tables 7-3, 7-4, and 7-5.

Inorganic analytical methods will follow EPA SW-846 3rd Edition with updates. Analysis for specified metals and cyanide is performed by flame, furnace, and cold vapor atomic absorption (AA); colorimetric; distillation; and inductively coupled argon plasma (ICP) methods. Contract Required Detection Limits are found in Table 7-6. The samples will be analyzed for 24 constituents (i.e. metals plus cyanide).

Total phenols, total organic carbon (TOC), total petroleum hydrocarbons (TPH), and grain size will be performed under the methodologies summarized in Table 7-1. Applicable Method Detection Limits are found in Table 7-7. Copies of the referenced analytical procedures used by RAI and Ceimic can be found in Appendices D and F, respectively.

Special analytical services necessary to achieve MCL's for supporting the PHERE will follow methods outlined in EPA SW-846 3rd Edition with updates.

TABLE 7-1

ANALYTICAL METHODOLOGY SUMMARY

Metallic Analytes

"Test Methods for Evaluating Solid Wastes, Physical/Chemical Methods", SW-846, 3rd Edition with updates.

*Samples Preparation Methods*

| | |
|---|---|
| Method 3005: | Acid Digestion of Waters for Total Recoverable or Dissolved Metals for Analysis by Flame Atomic Absorption Spectroscopy or Inductively Coupled Plasma Spectroscopy. |
| Method 3010: | Acid Digestion of Aqueous Samples and Extracts for Total Metals for Analysis by Flame Atomic Absorption Spectroscopy or Inductively Coupled Plasma Spectroscopy. |
| Method 3020: | Acid Digestion of Aqueous Samples and Extracts for Total Metals for Analysis by Furnace Atomic Absorption Spectroscopy. |
| Method 3040: | Dissolution Procedure for Oils, Greases, or Waxes. |
| Method 3050: | Acid Digestion of Sediments, Sludges, and Soils. |

*Methods for Determination of Metals*

| | |
|---|---|
| Method 6010: | Inductively Coupled Plasma Atomic Emission Spectroscopy |
| Method 7000: | Atomic Absorption Methods |
| Method 7020: | Aluminum (AA, Direct Aspiration) |
| Method 7040: | Antimony (AA, Direct Aspiration) |
| Method 7041: | Antimony (AA, Furnace Technique) |
| Method 7060: | Arsenic (AA, Furnace Technique) |
| Method 7061: | Arsenic (AA, Gaseous Hydride) |
| Method 7080: | Barium (AA, Direct Aspiration) |
| Method 7090: | Beryllium (AA, Direct Aspiration) |
| Method 7091: | Beryllium (AA, Furnace Technique) |
| Method 7130: | Cadmium (AA, Direct Aspiration) |
| Method 7131: | Cadmium (AA, Furnace Technique) |
| Method 7140: | Calcium (AA, Direct Aspiration) |
| Method 7190: | Chromium (AA, Direct Aspiration) |
| Method 7191: | Chromium (AA, Furnace Technique) |
| Method 7195: | Chromium, Hexavalent (Coprecipitation) |
| Method 7196: | Chromium, Hexavalent (Colorimetric) |
| Method 7197: | Chromium, Hexavalent (Chelation/Extraction) |
| Method 7198: | Chromium, Hexavalent (Differential Pulse Polarography) |
| Method 7200: | Cobalt (AA, Direct Aspiration) |
| Method 7201: | Cobalt (AA, Furnace Technique) |
| Method 7210: | Copper (AA, Direct Aspiration) |

Method 7380: Iron (AA, Direct Aspiration)
Method 7420: Lead (AA, Direct Aspiration)
Method 7450: Magnesium (AA, Direct Aspiration)
Method 7460: Manganese (AA, Direct Aspiration)
Method 7470: Mercury in Liquid Waste (Manual Cold-Vapor Technique)
Method 7471: Mercury in Solid or Semisolid Waste (Manual Cold-Vapor Technique)
Method 7480: Molybdenum (AA, Direct Aspiration)
Method 7481: Molybdenum (AA, Furnace Technique)
Method 7520: Nickel (AA, Direct Aspiration)
Method 7550: Osmium (AA, Direct Aspiration)
Method 7610: Potassium (AA, Direct Aspiration)
Method 7740: Selenium (AA, Furnace Technique)
Method 7741: Selenium (AA, Gaseous Hydride)
Method 7760: Silver (AA, Direct Aspiration)
Method 7770: Sodium (AA, Direct Aspiration)
Method 7840: Thallium (AA, Direct Aspiration)
Method 7841: Thallium (AA, Furnace Technique)
Method 7870: Tin (AA, Direct Aspiration)
Method 7910: Vanadium (AA, Direct Aspiration)
Method 7911: Vanadium (AA, Furnace Technique)
Method 7950: Zinc (AA, Direct Aspiration)

Organic Analytes

"Test Methods for Evaluating Solid Wastes, Physical/Chemical Methods", SW-846, 3rd Edition with updates.

*Sample Preparation Methods*

*Extractions and Preparations*

Method 3500: Organic Extraction And Sample Preparation
Method 3510: Separatory Funnel Liquid-Liquid Extraction
Method 3520: Continuous Liquid-Liquid Extraction
Method 3540: Soxhlet Extraction
Method 3550: Sonication Extraction
Method 3580: Waste Dilution
Method 5030: Purge-and-Trap

*Cleanup*

Method 3600: Cleanup
Method 3610: Alumina Column Cleanup
Method 3611: Alumina Column Cleanup And Separation of Petroleum Wastes
Method 3620: Florisil Column Cleanup

Method 3630: Silica Gel Cleanup
Method 3640: Gel-Permeation Cleanup
Method 3650: Acid-Base Partition Cleanup
Method 3660: Sulfur Cleanup

*Determination of Organic Analytes*

*Gas Chromatographic Methods*

Method 8000: Gas Chromatography
Method 8010: Halogenated Volatile Organics
Method 8080: Organochlorine Pesticides and PCBs
Method 8120: Chlorinated Hydrocarbons
Method 8150: Chlorinated Herbicides

*Gas Chromatographic/Mass Spectroscopic Methods*

Method 8240: Gas Chromatography/Mass Spectrometry for Volatile Organics
Method 8250: Gas Chromatography/Mass Spectrometry for Semivolatile Organics: Packed Column Technique
Method 8270: Gas Chromatography/Mass Spectrometry for Semivolatile Organics: Capillary Column Technique

Cyanide

EPA Method 9010 or 9012, "Test Methods for Evaluating Solid Wastes, Physical/Chemical Methods", SW-846, 3rd Edition with updates.

Sulfides

EPA Method 9030, "Test Methods for Evaluating Solid Wastes, Physical/Chemical Methods", SW-846, 3rd Edition with updates.

TOC (Sediment/Soil)

Piper, C. S. Soil and Plant Analysis. *A Lab Manual for the Examination of Soils and the Determination of Inorganic Constituents of Plants*. University of Adelaide Press. 1942. pp. 223-229 (Resource Analysts, Inc.).

Plumb, Russel H. Jr., Procedures for Handling and Chemical Analysis of Sediment and Water Samples. U.S. Army Corps of Engineers Under Contract EPA-4805572010. May 1981. pp. 3-73 and 3-74 (Ceimic Corp.).

TPH (Sediment/Soil)

Preparative extraction by EPA Method 3550. "Test Methods for Evaluating Solid Waste, Physical/Chemical Methods", SW- 846, 3rd Edition. Instrumental analysis by EPA Method 418.1, "Methods for Chemical Analysis of Water and Wastes", EPA Publication EPA-600/4-79-020.

Total Phenols (Sediment/Soil)

EPA Method 9065, "Test Methods for Evaluating Solid Waste, Physical/Chemical Methods", SW-846, 3rd Edition.

Grain Size

Resource Analyst, Inc., Standard Operating Procedure, QA-120 (RAI).

USEPA Procedure D422-63 "Standard Method for Particle-Size Analysis of Soils (Ceimic Corp.).

TABLE 7-2

SUMMARY OF ANALYTICAL PARAMETERS

| Sample Matrix | Analytical Parameters | Sample Holding Time[1] |
|---|---|---|
| Soil/Sediment | | |
| | Volatiles | 14 Days |
| | Semi-volatiles | 14 Days[2] |
| | Pesticides/PCB | 14 Days[2] |
| | Herbicides | 14 days[2] |
| | Metals (except Mercury) | 6 Months |
| | Mercury | 28 Days |
| | Cyanides/Sulfides | 14 Days |
| | Total Phenols | 28 Days |
| | TOC | 28 Days |
| | TPH | 28 Days |
| | Grain Size | N/A |
| Waters | | |
| | Volatiles | 14 Days[3] |
| | Semi-volatiles | 7 Days[2] |
| | Pesticides/PCB | 7 Days[2] |
| | Herbicides | 7 Days[2] |
| | Metals | 6 Months |
| | Mercury | 28 Days |
| | Cyanides/Sulfides | 14 Days |

NA = Not Applicable.

1 All holding times per EPA SW-846, 3rd Edition.

2 Days for extraction, after extraction 40 days to sample analysis.

3 If preserved with HCl. If samples are unpreserved, the holding time for aromatics is 7 days.

All holding times are from date of sampling.

TABLE 7-3
VOLATILE

TARGET COMPOUND LIST (TCL) AND
CONTRACT REQUIRED QUANTITATION LIMITS (CRQL)*

| Volatiles | CAS Number | Quantitation Limits ** Water ug/L | Low Soil/ Sediment[a] ug/kg |
|---|---|---|---|
| 1. Chloromethane | 74-87-3 | 10 | 10 |
| 2. Bromomethane | 74-83-9 | 10 | 10 |
| 3. Vinyl Chloride | 75-01-4 | 10 | 10 |
| 4. Chloroethane | 75-00-3 | 10 | 10 |
| 5. Methylene Chloride | 75-09-2 | 5 | 5 |
| 6. Acetone | 67-64-1 | 10 | 10 |
| 7. Carbon Disulfide | 75-15-0 | 5 | 5 |
| 8. 1,1-Dichloroethene | 75-35-4 | 5 | 5 |
| 9. 1,1-Dichloroethane | 75-34-3 | 5 | 5 |
| 10. 1,2-Dichloroethene (total) | 540-59-0 | 5 | 5 |
| 11. Chloroform | 67-66-3 | 5 | 5 |
| 12. 1,2-Dichloroethane | 107-06-2 | 5 | 5 |
| 13. 2-Butanone | 78-93-3 | 10 | 10 |
| 14. 1,1,1-Trichloroethane | 71-55-6 | 5 | 5 |
| 15. Carbon Tetrachloride | 56-23-5 | 5 | 5 |
| 16. Vinyl Acetate | 108-05-4 | 10 | 10 |
| 17. Bromodichloromethane | 75-27-4 | 5 | 5 |
| 18. 1,2-Dichloropropane | 78-87-5 | 5 | 5 |
| 19. cis-1,3-Dichloropropene | 10061-01-5 | 5 | 5 |
| 20. Trichloroethene | 79-25-2 | 5 | 5 |
| 21. Dibromochloromethane | 124-48-1 | 5 | 5 |
| 22. 1,1,2-Trichloroethane | 79-00-5 | 5 | 5 |
| 23. Benzene | 71-43-2 | 5 | 5 |
| 24. trans-1,3-Dichloropropene | 10061-02-6 | 5 | 5 |
| 25. Bromoform | 75-25-2 | 5 | 5 |
| 26. 4-Methyl-2-pentanone | 108-10-1 | 10 | 10 |
| 27. 2-Hexanone | 591-78-6 | 10 | 10 |
| 28. Tetrachloroethene | 127-18-4 | 5 | 5 |
| 29. Toluene | 108-88-3 | 5 | 5 |
| 30. 1,1,2,2-Tetrachloroethane | 79-34-5 | 5 | 5 |

(continued)

TABLE 7-3
VOLATILE

TARGET COMPOUND LIST (TCL) AND
CONTRACT REQUIRED QUANTITATION LIMITS (CRQL)*

| Volatiles | CAS Number | Quantitation Limits ** Water ug/L | Low Soil/ Sediment[a] ug/kg |
|---|---|---|---|
| 31. Chlorobenzene | 108-90-7 | 5 | 5 |
| 32. Ethyl Benzene | 100-41-4 | 5 | 5 |
| 33. Styrene | 100-42-5 | 5 | 5 |
| 34. Xylenes (Total) | 1330-20-7 | 5 | 5 |

[a] Medium Soil/Sediment Contract Required Quantitation Limits (CRQL) for Volatile TCL Compounds are 125 times the individual Low Soil/Sediment CRQL.

* Specific quantitation limits are highly matrix dependent. The quantitation limits listed herein are provided for guidance and may not always be achievable. These CRQL's are from the Contract Laboratory Program (CLP), 2/88 Organic Statement of Work (Organic SOW).

** Quantitation limits listed for soil/sediment are based on wet weight. The quantitation limits calculated by the laboratory for soil/sediment, calculated on dry weight basis as required by the contract, will be higher.

TABLE 7-4
SEMI-VOLATILE

TARGET COMPOUND LIST (TCL) AND
CONTRACT REQUIRED QUANTITATION LIMITS (CRQL)*

| Semi-Volatiles | CAS Number | Quantitation Limits ** Water ug/L | Low Soil/ Sediment[b] ug/kg |
|---|---|---|---|
| 35. Phenol | 108-95-2 | 10 | 330 |
| 36. bis(2-Chloroethyl) ether | 111-44-4 | 10 | 330 |
| 37. 2-Chlorophenol | 95-57-8 | 10 | 330 |
| 38. 1,3-Dichlorobenzene | 541-73-1 | 10 | 330 |
| 39. 1,4-Dichlorobenzene | 106-46-7 | 10 | 330 |
| 40. Benzyl alcohol | 100-51-6 | 10 | 330 |
| 41. 1,2-Dichlorobenzene | 95-50-1 | 10 | 330 |
| 42. 2-Methylphenol | 95-48-7 | 10 | 330 |
| 43. bis(2-Chloroisopropyl) ether | 108-60-1 | 10 | 330 |
| 44. 4-Methylphenol | 106-44-5 | 10 | 330 |
| 45. N-Nitroso-di-n-dipropylamine | 621-64-7 | 10 | 330 |
| 46. Hexachloroethane | 67-72-1 | 10 | 330 |
| 47. Nitrobenzene | 98-95-3 | 10 | 330 |
| 48. Isophorone | 78-59-1 | 10 | 330 |
| 49. 2-Nitrophenol | 88-75-5 | 10 | 330 |
| 50. 2,4-Dimethylphenol | 105-67-9 | 10 | 330 |
| 51. Benzoic acid | 65-85-0 | 10 | 1600 |
| 52. bis(2-Chloroethoxy) methane | 111-91-1 | 10 | 330 |
| 53. 2,4-Dichlorophenol | 120-83-2 | 10 | 330 |
| 54. 1,2,4-Trichlorobenzene | 120-82-1 | 10 | 330 |
| 55. Naphthalene | 91-20-3 | 10 | 330 |
| 56. 4-Chloroaniline | 106-47-8 | 10 | 330 |
| 57. Hexachlorobutadiene | 87-68-3 | 10 | 330 |
| 58. 4-Chloro-3-methylphenol (para-chloro-meta-cresol) | 59-50-7 | 10 | 330 |
| 59. 2-Methylnaphthalene | 91-57-6 | 10 | 330 |
| 60. Hexachlorocyclopentadiene | 77-47-4 | 10 | 330 |
| 61. 2,4,6-Trichlorophenol | 88-06-2 | 10 | 330 |
| 62. 2,4,5-Trichlorophenol | 95-95-4 | 50 | 1600 |
| 63. 2-Chloronaphthalene | 91-58-7 | 10 | 330 |
| 64. 2-Nitroaniline | 88-74-4 | 50 | 1600 |

(continued)

TABLE 7-4
SEMI-VOLATILE

TARGET COMPOUND LIST (TCL) AND
CONTRACT REQUIRED QUANTITATION LIMITS (CRQL)*

| Semi-Volatiles | CAS Number | Quantitation Limits ** Water ug/L | Low Soil/ Sediment[b] ug/kg |
|---|---|---|---|
| 65. Dimethylphthalate | 131-11-3 | 10 | 330 |
| 66. Acenaphthylene | 208-96-8 | 10 | 330 |
| 67. 2,6-Dinitrotoluene | 606-20-2 | 10 | 330 |
| 68. 3-Nitroaniline | 99-09-2 | 50 | 1600 |
| 69. Acenaphthene | 83-32-9 | 10 | 330 |
| 70. 2,4-Dinitrophenol | 51-28-5 | 50 | 1600 |
| 71. 4-Nitrophenol | 100-02-7 | 50 | 1600 |
| 72. Dibenzofuran | 132-64-9 | 10 | 330 |
| 73. 2,4-Dinitrotoluene | 121-14-2 | 10 | 330 |
| 74. Diethylphthalate | 84-66-2 | 10 | 330 |
| 75. 4-Chlorophenyl-phenyl ether | 7005-72-3 | 10 | 330 |
| 76. Fluorene | 86-73-7 | 10 | 330 |
| 77. 4-Nitroaniline | 100-01-6 | 50 | 1600 |
| 78. 4,6-Dinitro-2-methylphenol | 534-52-1 | 50 | 1600 |
| 79. N-nitrosodiphenylamine | 86-30-6 | 10 | 330 |
| 80. 4-Bromophenyl-phenylether | 101-55-3 | 10 | 330 |
| 81. Hexachlorobenzene | 118-74-1 | 10 | 330 |
| 82. Pentachlorophenol | 87-86-5 | 50 | 1600 |
| 83. Phenanthrene | 85-01-8 | 10 | 330 |
| 84. Anthracene | 120-12-7 | 10 | 330 |
| 85. Di-n-butylphthalate | 84-74-2 | 10 | 330 |
| 86. Fluoranthene | 206-44-0 | 10 | 330 |
| 87. Pyrene | 129-00-0 | 10 | 330 |
| 88. Butylbenzylphthalate | 85-68-7 | 10 | 330 |
| 89. 3,3'-Dichlorobenzidine | 91-94-1 | 20 | 660 |
| 90. Benzo(a)anthracene | 56-55-3 | 10 | 330 |
| 91. Chrysene | 218-01-9 | 10 | 330 |
| 92. bis(2-Ethylhexyl)phthalate | 117-81-7 | 10 | 330 |
| 93. Di-n-octylphthalate | 117-84-0 | 10 | 330 |
| 94. Benzo(b)fluoranthene | 205-99-2 | 10 | 330 |

(continued)

TABLE 7-4
SEMI-VOLATILE

TARGET COMPOUND LIST (TCL) AND
CONTRACT REQUIRED QUANTITATION LIMITS (CRQL)*

| Semi-Volatiles | CAS Number | Quantitation Limits ** Water ug/L | Low Soil/ Sediment[b] ug/kg |
|---|---|---|---|
| 95. Benzo(k)fluoranthene | 207-08-9 | 10 | 330 |
| 96. Benzo(a)pyrene | 50-32-8 | 10 | 330 |
| 97. Indeno(1,2,3-cd)pyrene | 193-39-5 | 10 | 330 |
| 98. Dibenz(a,h)anthracene | 53-70-3 | 10 | 330 |
| 99. Benzo(g,h,i)perylene | 191-24-2 | 10 | 330 |

[b] Medium Soil/Sediment Contract Required Quantitation Limits (CRQL) for Semi-Volatile TCL Compounds are 60 times the individual Low Soil/Sediment CRQL.

* Specific quantitation limits are highly matrix dependent. The quantitation limits listed herein are provided for guidance and may not always be achievable. These CRQL's are from the CLP 2/88 Organic SOW.

** Quantitation limits listed for soil/sediment are based on wet weight. The quantitation limits calculated by the laboratory for soil/sediment, calculated on dry weight basis as required by the contract, will be higher.

TABLE 7-5
PESTICIDE/PCB COMPOUNDS

TARGET COMPOUND LIST (TCL) AND
CONTRACT REQUIRED QUANTITATION LIMITS (CRQL)*

| Pesticides/PCBs | CAS Number | Quantitation Limits ** Water ug/L | Low Soil/ Sediment[c] ug/kg |
|---|---|---|---|
| 100. alpha-BHC | 319-84-6 | 0.05 | 8.0 |
| 101. beta-BHC | 319-85-7 | 0.05 | 8.0 |
| 102. delta-BHC | 319-86-8 | 0.05 | 8.0 |
| 103. gamma-BHC (Lindane) | 58-89-9 | 0.05 | 8.0 |
| 104. Heptachlor | 76-44-8 | 0.05 | 8.0 |
| 105. Aldrin | 309-00-2 | 0.05 | 8.0 |
| 106. Heptachlor epoxide | 1024-57-3 | 0.05 | 8.0 |
| 107. Endosulfan I | 959-98-8 | 0.05 | 8.0 |
| 108. Dieldrin | 60-57-1 | 0.10 | 16.0 |
| 109. 4,4'-DDE | 72-55-9 | 0.10 | 16.0 |
| 110. Endrin | 72-20-8 | 0.10 | 16.0 |
| 111. Endosulfan II | 33213-65-9 | 0.10 | 16.0 |
| 112. 4,4'-DDD | 72-54-8 | 0.10 | 16.0 |
| 113. Endosulfan sulfate | 1031-07-8 | 0.10 | 16.0 |
| 114. 4,4'-DDT | 50-29-3 | 0.10 | 16.0 |
| 115. Methoxychlor | 72-43-5 | 0.5 | 80.0 |
| 116. Endrin ketone | 53494-70-5 | 0.10 | 16.0 |
| 117. alpha-Chlordane | 5103-71-9 | 0.5 | 80.0 |
| 118. gamma-Chlordane | 5103-74-2 | 0.5 | 80.0 |
| 119. Toxaphene | 8001-35-2 | 1.0 | 160.0 |
| 120. Aroclor-1016 | 12674-11-2 | 0.5 | 80.0 |
| 121. Aroclor-1221 | 11104-28-2 | 0.5 | 80.0 |
| 122. Aroclor-1232 | 11141-16-5 | 0.5 | 80.0 |
| 123. Aroclor-1242 | 53469-21-9 | 0.5 | 80.0 |
| 124. Aroclor-1248 | 12672-29-6 | 0.5 | 80.0 |
| 125. Aroclor-1254 | 11097-69-1 | 1.0 | 160.0 |
| 126. Aroclor-1260 | 11096-82-5 | 1.0 | 160.0 |

[c] Medium Soil/Sediment Contract Required Quantitation Limits (CRQL) for Pesticide/PCB TCL compounds are 15 times the individual Low Soil/Sediment CRQL.

* Specific quantitation limits are highly matrix dependent. The quantitation limits listed herein are provided for guidance and may not always be achievable. These CRQL's are from the CLP, 2/88 Organic SOW.

** Quantitation limits listed for soil/sediment are based on wet weight. The quantitation limits calculated by the laboratory for soil/sediment, calculated on dry weight basis as required by the contract, will be higher.

TABLE 7-6

CLP DETECTION LIMITS FOR TARGET ANALYTE LIST[1]

COMPOUNDS (Metals and Cyanide)

| Parameter | Contract Required Detection Level[2] (ug/L) |
|---|---|
| Aluminum | 200 |
| Antimony | 60 |
| Arsenic | 10 |
| Barium | 200 |
| Beryllium | 5 |
| Cadmium | 5 |
| Calcium | 5000 |
| Chromium | 10 |
| Cobalt | 50 |
| Copper | 25 |
| Cyanide | 10 |
| Iron | 100 |
| Lead | 3 |
| Magnesium | 5000 |
| Manganese | 15 |
| Mercury | 0.2 |
| Nickel | 40 |
| Potassium | 5000 |
| Selenium | 5 |
| Silver | 10 |
| Sodium | 5000 |
| Thallium | 10 |
| Vanadium | 50 |
| Zinc | 20 |

1 The Priority Pollutant and RCRA metal lists are contained within this list.
2 The Contract Required Detection Levels are from the Contract Laboratory Program (CLP), 2/88 Inorganics Statement of Work (Inorganic SOW).

TABLE 7-7

APPENDIX IX VOLATILES AND
PRACTICAL QUANTITATION LIMITS (PQL)*

| Compound | PQL (ug/L) |
|---|---|
| Acetone | 10 |
| Acetonitrile | 200 |
| Acrolein | 150 |
| Acrylonitrile | 150 |
| Allyl chloride | 100 |
| Benzene | 5 |
| Bromodichloromethane | 5 |
| Bromoform | 5 |
| Bromomethane | 10 |
| Carbon disulfide | 5 |
| Carbon tetrachloride | 5 |
| Chlorobenzene | 5 |
| Chloroprene | 100 |
| Chlorodibromomethane | 5 |
| Chloroethane | 10 |
| Chloroform | 5 |
| 1,2-Dibromo-3-chloropropane | 5 |
| 1,2-Dibromoethane | 5 |
| Dibromomethane | 5 |
| trans-1,4-Dichloro-2-butene | 5 |
| Dichlorodifluoromethane | 10 |
| 1,1-Dichloroethane | 5 |
| 1,2-Dichloroethane | 5 |
| 1,1-Dichloroethene | 5 |
| trans-1,2-Dichloroethene | 5 |
| Dichloromethane (Methylene chloride) | 5 |
| 1,2-Dichloropropane | 5 |
| cis-1,3-Dichloropropene | 5 |
| trans-1,3-Dichloropropene | 5 |
| 1,4-Dioxane | 200 |
| Ethyl benzene | 5 |
| Ethyl cyanide | 100 |
| Ethyl methacrylate | 100 |

TABLE 7-7 (CONTINUED)

APPENDIX IX VOLATILES AND
PRACTICAL QUANTITATION LIMITS (PQL)*

| Compound | PQL (ug/L) |
|---|---|
| 2-Hexanone | 10 |
| Iodomethane | 40 |
| Isobutyl alcohol | 200 |
| Methyl ethyl ketone (2-Butanone) | 10 |
| Methyl methacrylate | 100 |
| 4-Methyl-2-pentanone | 10 |
| Pyridine | 1000 |
| Styrene | 5 |
| 1,1,1,2-Tetrachloroethane | 5 |
| 1,1,2,2-Tetrachloroethane | 5 |
| Tetrachloroethene | 5 |
| Toluene | 5 |
| 1,1,1-Trichloroethane | 5 |
| 1,1,2-Trichloroethane | 5 |
| Trichloroethene | 5 |
| Trichlorofluoromethane | 10 |
| 1,2,3-Trichloropropane | 5 |
| Vinyl acetate | 10 |
| Vinyl chloride | 10 |
| Xylenes (total) | 5 |

* Specific quantitation limits are highly matrix dependent. The quantitation limits listed herein are provided for guidance and may not always be achievable. These PQLs were provided by Ceimic Corp.

TABLE 7-8

APPENDIX IX SEMI-VOLATILES AND
PRACTICAL QUANTITATION LIMITS (PQL)*

| Compound | PQL (ug/L) |
|---|---|
| Acenaphthene | 10 |
| Acenaphthylene | 10 |
| Acetophenone | 10 |
| 2-Acetylaminofluorene | 10 |
| 4-Aminobiphenyl | 10 |
| Aniline | 50 |
| Anthracene | 10 |
| Aramit | 10 |
| Benzo(a)anthracene | 10 |
| Benzo(b)fluoranthene | 10 |
| Benzo(k)fluoranthene | 10 |
| Benzo(g,h,i)perylene | 10 |
| Benzo(a)pyrene | 10 |
| Benzyl alcohol | 10 |
| Bis(2-chloroethoxy)methane | 10 |
| Bis(2-chloroethyl)ether | 10 |
| Bis(2-chloroisopropyl)ether | 10 |
| Bis(2-ethylhexyl)phthalate | 10 |
| 4-Bromophenyl phenyl ether | 10 |
| Butyl benzyl phthalate | 10 |
| 2-sec-Butyl-4,6-dinitrophenol | 50 |
| 4-Chloroaniline | 10 |
| 4-Chloro-3-cresol | 50 |
| 2-Chloronaphthalene | 10 |
| 2-Chlorophenol | 10 |
| 4-Chlorophenyl phenyl ether | 10 |
| Chrysene | 10 |
| 2-Cresol | 10 |
| 3-Cresol | 10 |
| 4-Cresol | 10 |
| Diallate isomers | 10 |
| Dibenzo(a,h)anthracene | 10 |
| Dibenzofuran | 10 |
| Di-n-butyl phthalate | 10 |

TABLE 7-8 (CONTINUED)

APPENDIX IX SEMI-VOLATILES AND
PRACTICAL QUANTITATION LIMITS (PQL)*

| Compound | PQL (ug/L) |
|---|---|
| 1,2-Dichlorobenzene | 10 |
| 1,3-Dichlorobezene | 10 |
| 1,4-Dichlorobenzene | 10 |
| 3,3'-Dichlorobenzidine | 10 |
| 2,4-Dichlorophenol | 10 |
| 2,6-Dichlorophenol | 10 |
| Diethyl phthalate | 10 |
| Dimethoate | 10 |
| p-Dimethylaminoazobenzene | 10 |
| 7,12-Dimethylbenzo(a)anthracene | 10 |
| 3,3'-Dimethylbenzidine | 10 |
| alpha, alpha-Dimethylphenethylamine | 10 |
| 2,4-Dimethylphenol | 10 |
| Dimethyl phthalate | 10 |
| 1,3-Dintrobenzene | 10 |
| 4,6-Dinitro-o-cresol | 50 |
| 2,4-Dinitrophenol | 50 |
| 2,4-Dinitrotoluene | 10 |
| 2,6-Dinitrotoluene | 10 |
| Di-n-octyl phthalate | 10 |
| Diphenylamine | 10 |
| Disulfoton | 10 |
| Ethyl methacrylate | 10 |
| Ethyl methanesulfonate | 10 |
| Famphur | 10 |
| Fluoranthene | 10 |
| Fluorene | 10 |
| Hexachlororbezene | 10 |
| Hexachlorobutadiene | 10 |
| Hexachlorocyclopenadiene | 10 |
| Hexachloroethane | 10 |
| Hexachlorophene | 10 |
| Hexachloropropene | 10 |
| Indeno(1,2,3-cd)pyrene | 10 |

TABLE 7-8 (CONTINUED)

APPENDIX IX SEMI-VOLATILES AND
PRACTICAL QUANTITATION LIMITS (PQL)*

| Compound | PQL (ug/L) |
|---|---|
| Isophorone | 10 |
| Isosafrole | 10 |
| Methapyrilene | 10 |
| Methyl methanesulfonate | 50 |
| 2-Methylnaphthalene | 10 |
| Naphthalene | 10 |
| 1,4-Naphthoquinone | 10 |
| 1-Naphthylamine | 50 |
| 2-Naphthylamine | 50 |
| 2-Nitroaniline | 50 |
| 3-Nitroaniline | 50 |
| 4-Nitroaniline | 50 |
| Nitrobenzene | 10 |
| 2-Nitrophenol | 50 |
| 4-Nitrophenol | 50 |
| 4-Nitroquinoline 1-oxide | 10 |
| N-Nitroso-di-n-butylamine | 10 |
| N-Nitrosodiethylamine | 10 |
| N-Nitrosodimethylamine | 10 |
| N-Nitrosodiphenylamine | 10 |
| N-Nitroso-di-n-propylamine | 10 |
| N-Nitrosomethylethylamine | 10 |
| N-Nitrosomorpholine | 10 |
| N-Nitrosopiperidine | 10 |
| N-Nitrosopyrrolidine | 10 |
| 5-Nitro-o-toluidine | 10 |
| Pentachlorobenzene | 10 |
| Pentachloroethane | 10 |
| Pentachloronitrobezene | 10 |
| Pentachlorophenol | 50 |
| Phenacetin | 10 |
| Phenanthrene | 10 |
| Phenol | 10 |
| Phorate | 10 |
| 1,4-Phenylenediamine | 50 |

TABLE 7-8 (CONTINUED)

APPENDIX IX SEMI-VOLATILES AND
PRACTICAL QUANTITATION LIMITS (PQL)*

| Compound | PQL (ug/L) |
|---|---|
| 2-Picoline | 50 |
| Pronamide | 10 |
| Propyzamide | 10 |
| Pyrene | 10 |
| Safrole | 10 |
| Sulfotepp | 10 |
| 1,2,4,5-Tetrachlorobezene | 10 |
| 2,3,4,6-Tetrachlorophenol | 10 |
| o-Toluidine | 10 |
| 1,2,4-Trichlorobenzene | 10 |
| 2,4,5-Trichlorophenol | 50 |
| 2,4,6-Trichlorophenol | 10 |
| 1,3,5-Trinitrobezene | 10 |

* Specific quantitation limits are highly matrix dependent. The quantitation limits listed herein are provided for guidance and may not always be achievable. These PQLs were provided by Ceimic Corp.

TABLE 7-9

APPENDIX IX PESTICIDE/PCB'S AND
PRACTICAL QUANTITATION LIMITS (PQL)*

| Compound | PQL (ug/L) |
|---|---|
| alpha-BHC | 0.05 |
| beta-BHC | 0.05 |
| delta-BHC | 0.05 |
| gamma-BHC | 0.05 |
| Heptachlor | 0.05 |
| Heptachlor epoxide | 0.05 |
| Endosulfan I | 0.05 |
| Dieldrin | 0.1 |
| 4,4'-DDE | 0.1 |
| Endrin | 0.1 |
| Endosulfan II | 0.1 |
| 4,4'-DDD | 0.1 |
| Endosulfan sulfate | 0.1 |
| 4,4'-DDT | 0.1 |
| Methoxychlor | 0.5 |
| Endrin aldehyde | 0.1 |
| Endrin ketone | 0.1 |
| Chlordane | 1.0 |
| Toxaphene | 1.0 |
| Aroclor-1016 | 1.0 |
| Aroclor-1221 | 0.5 |
| Aroclor-1232 | 0.5 |
| Aroclor-1242 | 0.5 |
| Aroclor-1248 | 0.5 |
| Aroclor-1254 | 1.0 |
| Aroclor-1260 | 1.0 |
| Chlorobenzilate | 0.5 |
| Isodrin | 0.5 |
| Kepone | 0.5 |
| Methyl parathion | 0.5 |
| Ethyl parathion | 0.5 |

* Specific quantitation limits are highly matrix dependent. The quantitation limits listed herein are provided for guidance and may not always be achievable. These PQLs were provided by Ceimic Corp.

TABLE 7-10

APPENDIX IX HERBICIDES AND
PRACTICAL QUANTITATION LIMITS (PQL)*

| Compound | PQL (ug/L) |
|---|---|
| 2,4-D | 30 |
| 2,4,5-TP (Silvex) | 10 |
| 2,4,5-T | 10 |

* Specific quantitation limits are highly matrix dependent. The quantitation limits listed herein are provided for guidance and may not always be achievable. These PQLs were provided by Ceimic Corp.

TABLE 7-11

APPENDIX IX INORGANICS AND
PRACTICAL DETECTION LIMITS (PDL)*

| Analyte | PDL (ug/L) |
|---|---|
| Antimony | 60 |
| Arsenic | 10 |
| Barium | 200 |
| Beryllium | 5 |
| Cadmium | 5 |
| Chromium | 10 |
| Cobalt | 50 |
| Copper | 25 |
| Cyanide | 10 |
| Lead | 3 |
| Mercury | 0.2 |
| Nickel | 40 |
| Selenium | 5 |
| Silver | 10 |
| Sulfide | 50 |
| Thallium | 10 |
| Tin | 100 |
| Vanadium | 50 |
| Zinc | 20 |

* Specific detection limits are highly matrix dependent. The detection limits listed herein are provided for guidance and may not always be achievable. These PDLs are the CRDLs from the CLP, 2/88 Inorganics SOW except for tin and sulfide, which were provided by Ceimic Corp.

TABLE 7-12

METHOD DETECTION LIMITS FOR MISCELLANEOUS PARAMETERS

| Parameter | Detection Limits |
|---|---|
| Total Organic Carbon (TOC) | Soil 1000 mg/kg[1]<br>Soil 1000 mg/kg[2] |
| Total Petroleum Hydrocarbons (TPH) | Soil 60 mg/kg[3] |
| Total Phenols | Water 5 ug/L[4]<br>Soil 0.2 mg/kg[4] |

[1] Piper, C.S. Soil and Plant Analysis. A Lab Manual for the Examination of Soils and the Determination of Inorganic Constituents for Plants. University of Adelaide Press, 1942. pp. 223-229.

[2] Plumb, Russel H. Jr., Procedures for Handling and Analysis of Sediment and Water Samples. U.S. Army Corps of Engineers under Contract EPA-4805572010. May 1981. pp. 3-71 and 3-74.

[3] Preparative Extraction by EPA Method 3550. "Test Methods for Evaluating Solid Wastes, Physical/Chemical Methods", SW-846, 3rd Edition. Instrumental analysis by EPA Method 418.1, "Methods for Chemical Analysis of Water and Wastes", EPA Publication EPA-600/4-79-020.

[4] EPA Method 9065, "Test Methods for Evaluating Solid Waste, Physical/Chemical Methods", SW-846, 3rd Edition.

## SECTION 8.0: DATA REDUCTION, VALIDATION AND REPORTING

The analytical laboratory will review appropriate quality control data to assure the validity of the analytical results. The analytical laboratory will prepare and retain full analytical and QC documentation as required by the Contract Laboratory Program (CLP). Such documentation need not be hard copy, but may be in other storage media (e.g., magnetic tape). The analytical laboratory will supply one hard copy of the analytical and QC documentation to McLAREN/HART for storage in the project file and will be prepared to supply EPA a copy upon request. McLAREN/HART will perform an independent data validation on the final data package.

The analytical laboratory will provide the following information to McLAREN/HART in each analytical data package they submit:

- Analytical test methods and results for submitted samples, with appropriate data quality notations.
- Narrative including statement of samples received, description of any deviation from the QAPP, explanation of qualifications regarding data quality and other significant items encountered during analysis.
- According to CLP protocol, the laboratory is required to tentatively identify unknown compounds not included in the TCL list. This includes twenty (20) semi-volatile organic compounds, and ten (10) volatile organic compounds.
- All the hard copy deliverables as outlined in the *USEPA Contract Laboratory Program, Statement of Work for Organics, 2/88 and USEPA Contract Laboratory Program, Statement of Work for Inorganics, SOW No 788.*

Data assessment will be accomplished by the joint efforts of the Project QA Officer and Project Manager. The data assessment by the Project Manager will be based on the criteria that the sample was properly collected and handled according to the sampling plans and this QAPP.

The Project QA Officer will conduct a systematic review of the data for compliance with the established QA/QC criteria based on the spike, duplicate and blank results provided by the laboratory. An evaluation of data accuracy, precision, sensitivity and completeness will be performed and presented in the RFI report. This evaluation will be based on the following EPA documents:

1. *Region I, Laboratory Data Validation, Functional Guidelines for Evaluating Organics Analysis, February 1, 1988.*

2. *Region I, Laboratory Data Validation, Functional Guidelines for Evaluating Inorganic Analysis, June 13, 1988.*

The Project QA Officer will identify any out-of-control data points and data omissions and interact with the laboratory to correct data deficiencies. Decisions to repeat sample collection and analyses may be made by the Project Manager based on the extent of the deficiencies and their importance in the overall context of the project.

The Project QA Officer will provide data validation of analyses done by the laboratory, as described in the approved QAPP. This data validation shall determine data usability and shall be performed in accordance with the EPA Functional Guidelines for Data Review for data derived by CLP methods. If other than a CLP Method, the QA/QC criteria set forth in the method will be used for data validation. For methods lacking QA/QC data validation protocols, McLAREN/HART will establish validation criteria such as those in Section 8 of the EPA Series Methods in 40 CFR 136. The appropriate quality assurance data validation summary reports will be submitted, along with sample data and summary sheets, to the EPA Project Coordinator at the time final sample results are provided to EPA.

NAVFAC will make available to EPA the results of all validated sampling and/or tests or other data generated by NAVFAC in conducting the RFI. NAVFAC will submit these validated results in bi-monthly progress reports as required in Special Permit Conditions A.14 of the HSWA Permit and the approved, attached SOW.

Following data review, all data generated for the Portsmouth Naval Shipyard RFI will be entered into a computer in a format organized to facilitate data review and evaluation. The computerized data set will include the data flags provided by the laboratory in accordance with the CLP Statement of Work as well as additional comments of the data reviewer. The laboratory provided data flags include such items as: 1) concentrations below required quantitation limit; 2) estimated concentration due to poor spike recovery; and, 3) concentration of chemical also found in laboratory blanks. Additional comments will address the data as: 1) usable as a quantitative concentration; 2) usable with caution as an estimated concentration; or, 3) unusable due to out-of-control QA results.

The Portsmouth Naval Shipyard RFI data set will be available for controlled access by the Project Manager and other authorized personnel. The completed data set will be incorporated into the RFI report.

Further details concerning the management of the Portsmouth Naval Shipyard RFI data set and files are addressed in the Data Management Plan (Section 13.0 to the RFIP).

# SECTION 9.0: INTERNAL QUALITY CONTROL CHECKS

## LABORATORY INTERNAL QC CHECKS

RAI and Ceimic, the laboratories selected to conduct analyses of samples taken at the Portsmouth Naval Shipyard, are a participant in the EPA's CLP. The laboratories have a documented Quality Assurance Program that complies with EPA Guidance Document QAMS-005/80. Inorganic and organic testing will be performed in accordance with the procedures specified in "Test Methods for Evaluating Solid Waste, Physical/Chemical Methods", SW-846, 3rd Edition with updates. There are two types of quality assurance used by SW-846 to ensure the production of analytical data of known and documented usable quality: 1) analytical method quality control (QC); and, 2) program quality assurance (QA).

It will be the responsibility of the laboratory, specifically the laboratory data reviewers, to document, in each data package provided, that both initial and ongoing instrument and analytical QC functions have been met. Any samples analyzed in non-conformance with QC criteria will be reanalyzed by the laboratory when sufficient sample volume is available and the allowed holding time is not exceeded.

## FIELD INTERNAL QC CHECKS

For field quality control, replicate samples, field or equipment blanks, and trip blanks will be obtained for each of four sampling categories (surface soil, surface water, sediment and groundwater). The procedures for obtaining these QA/QC samples are included in their respective sampling plans. The standard procedure for obtaining replicates is one replicate for every ten to twenty samples. Field blanks will be collected throughout the

sampling events for each matrix. Field blanks for soil will be obtained by pouring distilled water obtained from the laboratory or a chemical supply company over decontaminated sampling equipment (trowels or mixing bowls). The water will pass over this equipment and be allowed to run directly into laboratory prepared bottles. All information relative to the field blank will be noted in the field log book and each field blank will be given sequential numbers preceded by the letters "RB". One trip blank for TCL volatiles will be sent with each shipment of TCL volatile samples. Tables 9-1, 9-2, 9-3, and 9-4 summarize the number and types of replicate and field blank samples to be collected during the Portsmouth Naval Shipyard RFI.

Field quality control procedures employed during the soil gas sampling and analysis will include the following: use of precleaned sampling tubes; collection of one replicate sample for every ten samples obtained; and collection of trip blanks.

Table 9-1. Summary of Offshore QA/QC Samples

| Sample Media | Analytical Parameters | Number of Samples | Number of QA/QC Samples | | | |
|---|---|---|---|---|---|---|
| | | | Replicates | Field | Blanks* | MS/MSD |
| Surface Sediment (SWMU 5) | PP Metals | 5 | 1 | - | | 1 |
| | TPH | 5 | 1 | - | | 1 |
| | PCBs | 5 | 1 | - | | 1 |
| | TCL Volatiles** | 5 | 1 | - | | 1 |
| | TOC | 6 | 1 | - | | 1 |
| | Phenols | 5 | 1 | - | | 1 |
| | Appendix IX** | 1 | - | - | | - |
| Surface Sediment (SWMU 8) | PP Metals | 19 | 2 | 1 | | 1 |
| | TPH | 19 | 2 | 1 | | 1 |
| | PCBs | 19 | 2 | 1 | | 1 |
| | TCL Volatiles** | 19 | 2 | 1 | | 1 |
| | TOC | 20 | 2 | 1 | | 1 |
| | Phenols | 19 | 2 | 1 | | 1 |
| | Appendix IX** | 1 | - | - | | - |
| Surface Sediment (SWMU 10) | PP Metals | 2 | - | - | | - |
| | TOC | 2 | - | - | | - |
| Surface Sediment (SWMU 27) | TPH | 3 | - | - | | - |
| | PCBs | 3 | - | - | | - |
| | TOC | 3 | - | - | | - |
| Surface Sediment (River) | PP Metals | 11 | 2 | - | | 1 |
| | TPH | 11 | 2 | - | | 1 |
| | PCBs | 11 | 2 | - | | 1 |
| | TCL Volatiles** | 3 | 1 | - | | 1 |
| | Phenols | 3 | 1 | - | | 1 |
| | Appendix IX** | 3 | - | - | | - |
| | TOC | 14 | 2 | - | | 1 |
| | Grain Size | 3 | - | - | | - |
| Core Sediment | PP Metals | 6 | 1 | - | | 1 |
| (SWMU 8) | PCBs | 6 | 1 | - | | 1 |
| | TOC | 6 | 1 | - | | 1 |
| Core Sediment (River) | PP Metals | 12 | 1 | 1 | | 1 |
| | PCBs | 12 | 1 | 1 | | 1 |
| | TOC | 12 | 1 | 1 | | 1 |

* For soil/sediment sample, a rinseate blank will be used for a field blank.
** One trip blank per sampling day will be analyzed for TCL volatiles.

TCL--Target Compound List
TOC--Total Organic Carbon
TPH--Total Petroleum Hydrocarbons
PCBs--Polychlorinated biphenyls, Method 8080
PP--Priority Pollutant
MS/MSD--Matrix Spike/Matrix Spike Duplicate (2 samples)

Table 9-2. Summary of JILF QA/QC Samples

| Sample Media | Analytical Parameters | Number of Samples | Number of QA/QC Samples | | | |
|---|---|---|---|---|---|---|
| | | | Replicates | Field Blanks* | | MS/MSD |
| Soils (Test Borings) | | | | | | |
| JILF | TCL Organics** | 54 | 5 | 2 | | 3 |
| | TAL Inorganics | 54 | 5 | 2 | | 3 |
| | Appendix IX** | 6 | 1 | 1 | | 1 |
| Mercury Burial | RCRA Metals | 20 | 2 | 1 | | 1 |
| Sediment | | | | | | |
| Fresh Water Ponds | Appendix IX** | 8 | 1 | 1 | | 1 |
| | TOC | 8 | 1 | 1 | | 1 |
| | Grain Size | 6 | - | - | | - |
| Groundwater | | | | | | |
| JILF | TCL Organics** | 6 | 1 | 1 | | 1 |
| | TAL Inorganics | 6 | 1 | 1 | | 1 |
| | TAL Filtered Metals | 6 | 1 | 1 | | 1 |
| | Appendix IX** | 12 | 2 | 1 | | 1 |
| | Appendix IX for Filtered Metals Only | 12 | 2 | 1 | | 1 |
| Mercury Burial | RCRA Metals Filtered | 5 | 1 | 1 | | 1 |
| | RCRA Metals Unfiltered | 5 | 1 | 1 | | 1 |
| Surface Water | | | | | | |
| Fresh Water Ponds | Appendix IX** | 8 | 1 | 1 | | 1 |

* Field blanks for soil and sediment samples will be rinseate blanks.
** One trip blank for TCL Volatile Organics will be sent with each shipment of groundwater samples.

PP--Priority Pollutant
TCL--Target Compound List
TAL--Target Analyte List
MS/MSD--Matrix Spike/Matrix Spike Duplicate (2 samples)

Table 9-3. Summary of DRMO QA/QC Samples

| Sample Media | Analytical Parameters | Number of Samples | Number of QA/QC Samples | | |
|---|---|---|---|---|---|
| | | | Replicates | Field Blanks* | MS/MSD |
| Surface Soil | PP Metals | 9 | 1 | 1 | 1 |
| | PCB | 9 | 1 | 1 | 1 |
| | TPH | 9 | 1 | 1 | 1 |
| | Appendix IX** | 3 | 1 | 1 | 1 |
| Sediment | PP Metals | 2 | 1 | 0 | 0 |
| | PCB | 2 | 1 | 0 | 0 |
| | TPH | 2 | 1 | 0 | 0 |
| Soil Borings | PP Metals | 32 | 3 | 2 | 2 |
| | PCB | 32 | 3 | 2 | 2 |
| | TPH | 32 | 3 | 2 | 2 |
| | Appendix IX** | 3 | 1 | 1 | 1 |
| Groundwater | PP Metals | 7 | 1 | 1 | 1 |
| | Filtered | 7 | 1 | 1 | 1 |
| | PCB | 7 | 1 | 1 | 1 |
| | TCL Volatiles** | 7 | 1 | 1 | 1 |
| | Appendix IX** | 6 | 1 | 1 | 1 |
| | Appendix IX for Filtered Metals Only | 6 | 1 | 1 | 1 |

* Field blanks for soil and sediment samples will be rinseate blanks.
** One trip blank for TCL Volatiles/day of sampling.

PP--Priority Pollutant
PCBs--Polychlorinated biphenyls, Method 8080
TPH--Total Petroleum Hydrocarbons
TCL--Target Compound List
MS/MSD--Matrix Spike/Matrix Spike Duplicate (2 samples)

Table 9-4. Summary of Tanks QA/QC Samples

| Sample Media | Analytical Parameters | Number of Samples | Number of QA/QC Samples | | |
|---|---|---|---|---|---|
| | | | Replicates | Field Blanks* | MS/MSD |
| Confirmation Soil Samples (4 locations, 4 samples per location) | TCL Organics** | 16 | 1 | 1 | 1 |
| | TAL Inorganics | 16 | 1 | 1 | 1 |
| | pH | 16 | 1 | - | - |
| | TOC | 16 | 1 | 1 | - |
| | Grain Size | 16 | 1 | - | - |
| | Atterberg Limits | 16 | 1 | - | - |
| | Percent Moisture | 16 | 1 | - | - |
| Soil Borings (3 locations, 15 samples per location) | TCL Organics** | 45 | 4 | 3 | 3 |
| | TAL Inorganics | 45 | 4 | 3 | 3 |
| | pH | 45 | 4 | - | - |
| | TOC | 45 | 4 | 3 | - |
| | Grain Size | 45 | 4 | - | - |
| | Atterberg Limits | 45 | 4 | - | - |
| | Percent Moisture | 45 | 4 | - | - |
| Tank Contents | | | | | |
| Free Liquid | Appendix IX** | 4 | 1 | 1 | 1 |
| Sludge | Appendix IX** | 4 | 1 | 1 | 1 |

Note: Samples from soil borings will be collected for the tanks at SWMU 10, SWMU 11, and SWMU 12. Confirmation soil samples will be collected for the tanks at SWMU 13, SWMU 16, SWMU 21 and SWMU 23.

* Field blanks for soil and sediment samples will be rinseate blanks.

** One trip blank per sampling day will be analyzed for volatiles.

MS/MSD--Matrix Spike/Matrix Spike Duplicate (2 samples)
TCL--Target Compount List
TAL--Target Analyte List
TOC--Total Organic Carbon

# SECTION 10.0: QUALITY ASSURANCE AUDITS

## LABORATORY PERFORMANCE AND SYSTEMS AUDITS

The analytical laboratory will conduct both internal and external quality control checks. External quality control checks may include participation in various certification programs with various governmental agencies and/or analysis of QC samples of known concentrations received from the USEPA. Internal quality control checks (replicates, spikes and duplicates) are performed in accordance with specific methods and criteria required by the state in which analyses are performed. A Laboratory Quality Assurance Plan is provided in Appendix C.

## FIELD TEAM PERFORMANCE AND SYSTEMS AUDITS

The Project QA officer will be responsible for conducting three audits: a performance audit; an evidence audit; and a performance evaluation audit of the field analysis team. The audits will evaluate the implementation of the project QA program.

A minimum of one performance audit will be conducted early in the remedial investigation to ensure that proper procedures are followed and that subsequent data will be valid. It will focus on the details of the QA program. The audit checklist, which begins on the following page, will serve as the guide for the performance audit for field procedures. The audit will evaluate the following:

- Project Responsibilities
- Sample Custody Procedures
- Document Control
- Sample Identification System
- QC Corrective Action Procedures

The QA officer will also be responsible for conducting one evidence audit. The purpose of the evidence audit is to ensure that proper project documentation is maintained. An example of an evidence audit checklist follows the performance audit checklist. This document will serve as the guide for the evidence audit.

# PERFORMANCE AUDIT CHECKLIST

## PORTSMOUTH NAVAL SHIPYARD

Field Investigation Audit

Project No.: _____ Date: _____

Project Location: _____ Signature: _____

Team Members: _____

Yes ___ No ___ 1) Has a project coordinator been appointed?

Comments _____

Yes ___ No ___ 2) Was a project plan prepared?

Comments _____

Yes ___ No ___ 3) Was a briefing held for project participants?

Comments _____

Yes ___ No ___ 4) Were additional instructions given to project participants?

Comments _____

Yes ___ No ___ 5) Is there a written list of sampling locations and descriptions?

Comments _____

Yes ___ No ___ 6) Is there a list of accountable field documents checked out to the project coordinator?

Comments _____

Yes ___ No ___ 7) Is the transfer of field documents from the coordinator to field participants documented in a logbook?

Comments _____

Yes ___ No ___ 8) Are samples collected as stated in the project plan or as directed by the coordinator?

Comments _____

Yes ___ No ___ 9) Are samples collected in the type of containers specified in the project plan or as directed by the coordinator?

Comments _____

Yes ___ No ___ 10) Are samples preserved as specified in the project plan or as directed by the coordinator?

Comments _____

Yes ___ No ___ 11) Are the number, frequency, and type of samples collected as specified in the project plan or as directed by the coordinator?

Comments _____

Yes ___ No ___ 12) Are the number, frequency, and type of measurements and observations taken as specified in the project plan or as directed by the coordinator?

Comments _____

Yes ___ No ___ 13) Are samples identified with sample tags?

Comments _____

Yes ___ No ___ 14) Are blank and duplicate samples properly identified?

Comments _____

Yes ___ No ___ 15) Are sample and serial numbers for samples split with other organizations recorded in a logbook or on a chain-of-custody record?

Comments _____

Yes ___ No ___ 16) Are samples listed on a chain-of-custody record?

Comments _____

Yes ___ No ___ 17) Is chain-of-custody documented and maintained?

Comments _____

Yes ___ No ___ 18) Are quality assurance checks performed as directed?

Comments _____

Yes ___ No ___ 19) Are photographs documented in logbooks as required

Comments _____

Yes ___ No ___ 20) Have any accountable documents been lost?

Comments _____

Yes ___ No ___ 21) Have any accountable documents been voided?

Comments _____

Yes ___ No ___ 22) Have any accountable documents been disposed of?

Comments _____

# EVIDENCE AUDIT CHECKLIST

## PORTSMOUTH NAVAL SHIPYARD

Document Control Audit

Project No.: _____

Project Location: _____ Date: _____

File Location: _____ Signature: _____

Yes ___ No ___ 1) Have the individual files been assembled (field investigation, laboratory)?

Comments _____

Yes ___ No ___ 2) Is there a list of accountable field documents?

Comments _____

Yes ___ No ___ 3) Are all accountable field documents present or accounted for? (Fill out additional checklist.)

Comments _____

## SECTION 11.0: ROUTINE PROCEDURES TO ASSESS PRECISION, ACCURACY AND COMPLETENESS OF DATA

The EPA Contract Laboratory Program (CLP) has developed an extensive quality assurance/quality control program to assess the precision, accuracy, and completeness of laboratory data. By using the guidelines for inorganic and organic validation, a measure of precision and accuracy can be obtained. Table 3-1 defines the precision and accuracy in terms of relative percent differences (RPD) and percent spike recovery for the analytes of interest.

To assess field sampling precision, duplicate samples are analyzed to determine relative percent differences using the following equation:

$$RPD = \frac{|x_1 - x_2|}{\text{avg}\ (x_1 + x_2)} \times 100$$

Relative percent difference can only approximate field sampling precision. When taken into consideration with other quality assurance parameters, it can also be used as a measure of laboratory analytical precision in the absence of spike and blank analyses.

Completeness is a measure of the amount of valid data obtained from a measurement system, expressed as a percentage of the number of valid measurements that should have been (i.e., were planned to be) collected. Completeness is not intended to be a measure of representativeness, that is, how closely the measured results reflect the actual concentration or distribution of the pollutant in the media sampled. A project could produce 100% data completeness (all samples planned were actually collected and found to be valid), but the results may not be representative of the pollutant concentration actually present. For example, the analysis method might be biased, or the sampling times or locations might not provide a representative indication of the actual distribution of the pollutant in the media sampled.

## SECTION 12.0: NON-CONFORMANCE/CORRECTIVE ACTION

Non-conforming items and activities are those which do not meet the project requirements, procurement document criteria, or approved work procedures. Non-conformance may be detected and identified by:

- Project Staff--During the performance of field investigation and testing, supervision of subcontractors, and preparation and verification of numerical analyses;
- Laboratory Staff--During the preparation for and performance of laboratory testing, calibration of equipment, and quality control activities; and
- Quality Assurance Personnel--During the performance of audits.

Each non-conformance affecting quality shall be documented by the personnel identifying or originating it. This may be done as part of a review summary of laboratory analysis quality control tests, post-audit report, internal memorandum, or letter, as appropriate. Documentation shall, when necessary, include:

- Identification of the individual(s) identifying or originating the non-conformance;
- Cause and description of the non-conformance;
- Method(s) for correcting the non-conformance (corrective action) or description of the variance granted; and
- Schedule for completing corrective action.

Documentation shall be made available to project, laboratory, and/or quality assurance management, and, if applicable, subcontractor management. It is the responsibility of the Field Team Leader, Project Manager, and/or cognizant Quality Assurance personnel to then notify personnel of the non-conformance. In addition, the Project Manager, through the Program Director, will report to the NAVFAC Project Manager in writing, significant nonconformances which could impact the results of the work and indicate the corrective action taken or planned.

Completion of corrective actions for significant nonconformance should be verified by Quality Assurance personnel as part of future auditing activities.

Guidelines for non-conformance and corrective actions involving CLP analyses can be found in "Region I, Laboratory Data Validation Functional Guidelines for Evaluating Organic Analyses, February 1, 1988" and "Region I, Laboratory Data Validation Functional Guidelines for Evaluating Inorganic Analyses, June 13, 1988".

Any significant recurring non-conformance should be evaluated by project, laboratory, and/or quality assurance personnel to determine its cause and appropriate changes instituted in project requirements and procedures to prevent future recurrence. When significant non-conforming conditions have been identified, the person(s) or contractor(s) involved will prepare a summary of all work affected during the project. If corrective action can be taken to mitigate the effects of non-conforming conditions, the summary report will contain a tabulation of dates and effects of the corrective action taken.

## SECTION 13.0: QUALITY ASSURANCE REPORTS TO MANAGEMENT

Monthly reports will be issued by the Project Manager in consultation with the Field Team Leader and the Project QA Officer. The reports will include assessment of the status of the project in relation to the agreed upon time table. The reports will also include, as appropriate, the results of the performance audit and evidence audit and any necessary corrective action procedures.

## QAPP REVISIONS

Revisions and modifications to any section of the QAPP is indicated by the information provided by the document control format in the upper right hand corner on each page. Any changes in the QAPP will require an updated signature approval page and all responsible parties signatures before going into affect.

# Appendix A

## Orion Model 210 Digital pH Meter Manual

ORION

Laboratory Products Group
Orion Research Incorporated

# MODEL 210 DIGITAL pH METER
# INSTRUCTION MANUAL

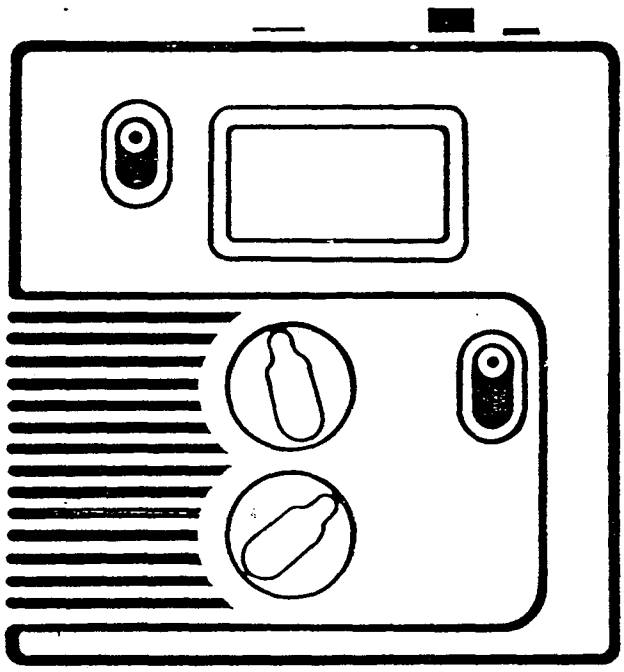

# CONTENTS


**General Information** 2

Introduction 2

Instrument Description 2

**Instrument Set-up** 3

Support Rod 3

Power Source 3

Battery Installation 3

Electrode Connections 4

Meter Check-out Procedure 4

**Measurement Procedures** 5

pH Measurements 5

Single Buffer Standardization 5

Two Buffer Standardization 5

Potentiometric Measurements 6

Dissolved Oxygen Measurement 6

**Troubleshooting Guide** 6

**Instrument Warranty** 7

**Repair and Service** 7

**Notice of Compliance** 7

**Optional Accessories** 8

**Specifications** 9

# GENERAL INFORMATION

## Introduction

The ORION SA 210 is a portable battery-operated digital pH meter for field, plant or laboratory use. It is designed for versatile, easy operation, and can be used in or out of the accompanying carrying case. The instrument is lightweight and is designed to fit comfortably in the hand. All controls are on the meter face, which allows one hand calibration.

The instrument measuring range is −1999 to + 1999 mV, and pH is displayed to two decimal places. The meter has a large easy to read LCD display.

## Instrument Description See **Figure 1**.

1 **ON/OFF Switch** Controls power to meter.

2 **LCD Display** Automatically displays data in large numerals with negative polarity sign and decimal point. pH values are displayed from 0 to 14 with 0.01 pH unit resolution. Millivolt range is −1999 to + 1999. Dissolved oxygen is measured from 0 to 14 ppm when meter is used with Model 97-08 Oxygen Electrode.

3 **Mode Control** Provides operator with choice of measuring sample in either pH or mV mode.

4 **Calibration Control** Used to standardize the meter/electrode system in buffers of known pH.

5 **Temperature/Slope Control** Compensates for variation in electrode slope or solution temperature.

6 **Electrode Connection** Accepts BNC connector from combination electrodes and pin tip jack available for use with separate half-cell reference electrodes.

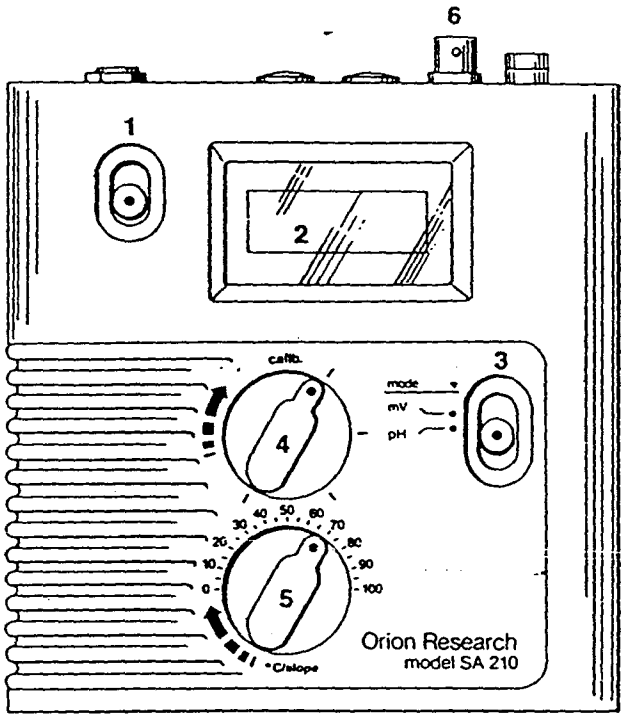


**Figure 1**
**Face of the SA 210**

# INSTRUMENT SET-UP

## Support Rod See Figure 2.

1. Attach support rod base to side of meter carrying case and tighten clamp screw.
2. Insert support rod into base. Tighten by turning rod clockwise.
3. Attach electrode holder to top of support rod.

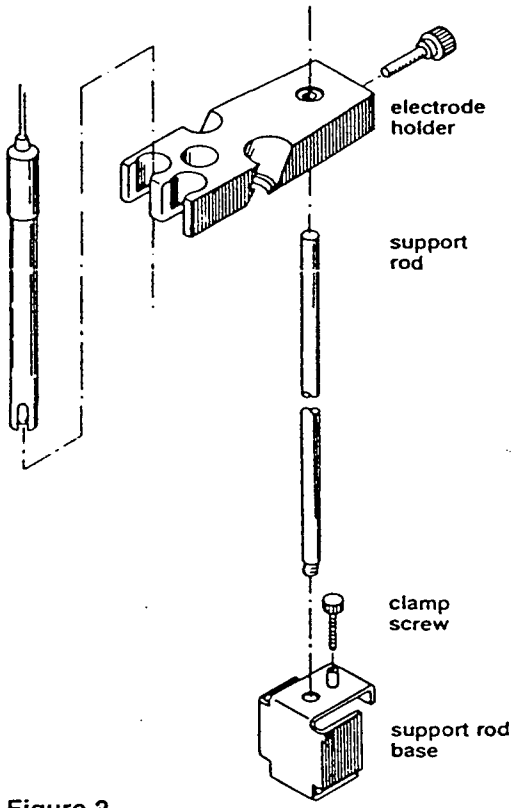


**Figure 2**
**Support Rod and Clamp**

## Power Source

ORION SA 210 operates on one non-rechargeable 9-volt alkaline battery. Optional AC line adapters are available for both 110 and 220 volt mains. Refer to **ACCESSORIES**, page 7.

## Battery Installation See Figure 3.

1. Remove access panel on back of meter. No tools are required, simply slide cover towards bottom of meter.
2. Attach battery connector clip of meter to battery terminals, install battery and replace access panel.

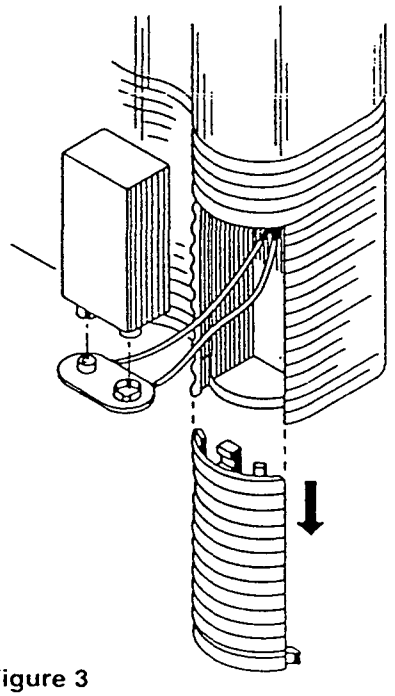

**Figure 3**
**Rear Access Panel Removed**

# INSTRUMENT SET-UP (continued)

## Electrode Connections

1. Attach electrodes with BNC connectors directly to the top of the meter. Refer to **Figure 4**.
2. Electrodes without BNC connectors may be used with a commercially available BNC adapter (Orion Cat. No. 090033). See **Figure 5**.

   If using a combination electrode, electrode connection **3** is not used.

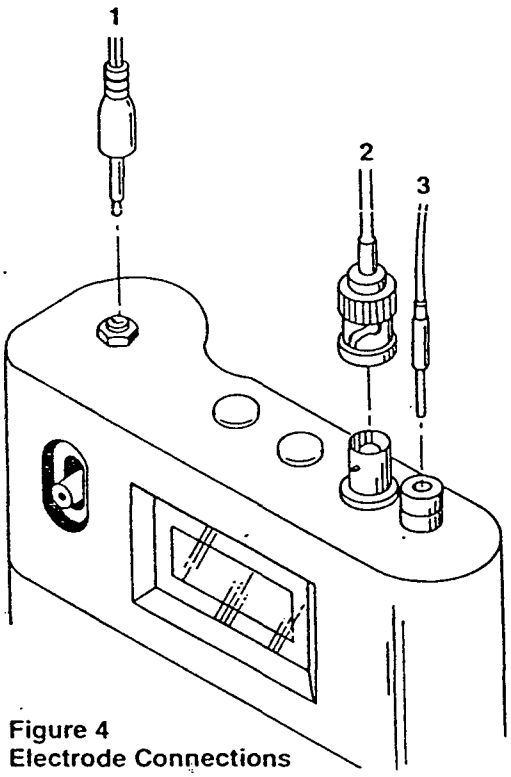


**Figure 4**
**Electrode Connections**

**Legend**

**1** AC line adapter
**2** BNC connector
**3** Reference pin-tip connector

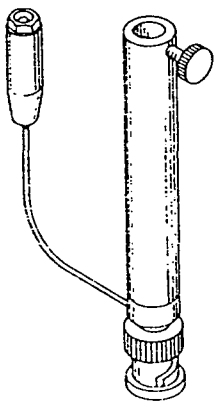

**Figure 5**
**U.S. Standard Connector To BNC Adapter**

## Meter Check-Out Procedure

1. Slide power switch to **ON** position.
2. Slide mode switch to **pH**. If LO BATT indicator on LCD remains on, battery must be replaced.
3. When using optional AC line adapter, disregard step 2. Connect line adapter to meter and appropriate power source.
4. Attach BNC shorting plug (Orion Cat. No. 090045) to BNC connector on top of meter. Slide **mode** switch to **pH**. Adjust **calib** knob to read a steady 7.00. If this cannot be done, refer to **TROUBLE-SHOOTING**, page 6.
5. Remove the shorting plug. After successful completion of steps 1-4, the meter is ready for use with an electrode.

# MEASUREMENT PROCEDURES

## pH Measurements See Figure 6.

### Single Buffer Standardization

1. Sample and buffer temperature must be equal. Set temp/slope control to buffer temperature (°C).
2. Place electrode in a buffer solution with pH value within 1.5 units of the expected sample value and stir moderately.
3. Slide mode switch to pH. Allow reading to stabilize, then adjust calib control so that correct buffer value at that temperature is displayed.
4. Remove electrodes from the buffer solution and rinse.
5. Place electrodes into sample and stir moderately. Allow reading to stabilize.
6. Record pH value displayed.

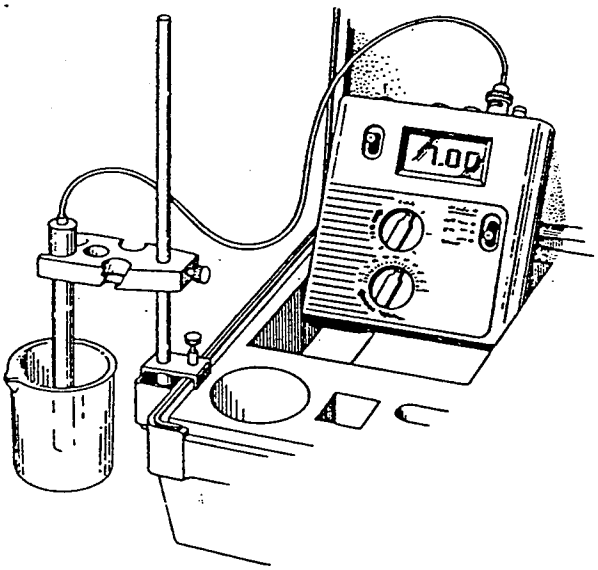


**Figure 6**
**SA 210 Meter Set Up For Sample Measurement**

### Two Buffer Standardization

***NOTE: For maximum accuracy, perform a two buffer calibration once at the beginning of each day. This procedure provides the correct setting for*** temp/slope control. Subsequent measurements are made after a single buffer calibration.

1. Sample and buffer temperature must be equal. Set temp/slope control to buffer temperature (°C).
2. Place electrode in pH 7 buffer and stir moderately.
3. Slide mode switch to pH. Allow reading to stabilize, then adjust calib control so that correct buffer value at that temperature is displayed.
4. Remove electrode from the buffer solution and rinse.
5. Place electrode in second buffer and stir moderately. Allow reading to stabilize.
6. Adjust temp/slope control until correct value of second buffer is displayed. Remove electrode from solution and rinse.
7. Place electrode in sample and stir moderately. Allow reading to stabilize.
8. Record pH value displayed.

If sample temperature differs significantly from the buffer temperatures used to calibrate, an adjustment can be made. Raise or lower the temp/slope control from its current setting, described in step 6, by the difference between the actual temperature and the sample temperature. For maximum accuracy use ATC probe.

# MEASUREMENT PROCEDURES (continued)

## Potentiometric Measurements

Potentiometric titrations are performed in mV mode using either ion selective or redox electrodes with BNC connectors. Detailed instructions for any ORION electrode are given in the electrode instruction manual. Titration instructions are included in ORION Redox Electrode (Model 96-78) Instruction Manual, or in standard analytical chemistry texts. U.S. Standard to BNC adapters are available from Orion (Cat.No. 090033).

## Dissolved Oxygen Measurement

Dissolved oxygen measurements are displayed in ppm when ORION Model 97-08-99 Dissolved Oxygen Electrode is used with the SA 210 Meter. Follow the instructions in the electrode manual. Be sure to set meter mode switch to pH.

# TROUBLESHOOTING GUIDE

The following section covers troubleshooting that can be performed without special tools or skills. The Orion Technical Service Personnel can be consulted for troubleshooting advice by calling 1-800-225-1480 or 617-864-5400. Outside North America contact your local authorized ORION Representative.

| Malfunction | Possible Cause | Remedy |
|---|---|---|
| No Display | No power to meter | Check that switch is in ON position. |
| | | Replace battery. |
| | | Check that adapter is receiving power and is plugged in securely. |
| More than one decimal displayed | mode switch is between positions | Adjust switch to proper position. |
| Erratic readings or drift. Readings out of range. | Electrode failure | Follow meter checkout procedure. If meter okay, check electrode. |

# INSTRUMENT WARRANTY

ORION RESEARCH INCORPORATED warrants this instrument will operate for one year from the date of purchase when used under normal laboratory conditions, and in accordance with the operating limitations and maintenance procedures given in the instruction manual. In the event of failure within the warrant period, Orion, or its Authorized Dealer, will, at Orion's option, repair or replace the non-conforming instrument at no charge to the customer.

THE WARRANTY DESCRIBED ABOVE IS EXCLUSIVE AND IN LIEU OF ANY OTHER WARRANTY, WHETHER STATUTORY, EXPRESS OR IMPLIED, INCLUDING BUT NOT LIMITED TO, ANY IMPLIED WARRANTY OF MERCHANTABILITY OR FITNESS FOR A PARTICULAR PURPOSE AND ALL WARRANTIES ARISING FROM COURSE OF DEALING OR USAGE OF TRADE, EXCEPT TITLE. THE BUYER'S SOLE AND EXCLUSIVE REMEDY IS FOR REPAIR, OR REPLACEMENT OF THE DEFECTIVE INSTRUMENT OR PART, OR REFUND OF THE PURCHASE PRICE; BUT IN NO EVENT SHALL ORION (ITS CONTRACTORS AND SUPPLIERS OF ANY TIER) BE LIABLE TO THE BUYER OR ANY PERSON, IN CONTRACT OR IN TORT (INCLUDING NEGLIGENCE) FOR ANY SPECIAL, INDIRECT, INCIDENTAL OR CONSEQUENTIAL DAMAGES.

Representations and warranties made by any person, including dealers, representatives and employees of Orion, which are inconsistent or in conflict with the terms of this warranty shall not be binding upon Orion unless in writing and signed by one of its officers.

# NOTICE OF COMPLIANCE

This meter may generate radio frequency energy and if not installed and used properly, that is, in strict accordance with the manufacturer's instructions, may cause interference to radio and television reception. It has been type-tested and found to comply with the limits for a Class B computing device in accordance with specifications in Subpart J of Part 15 of FCC Rules, which are designed to provide reasonable protection against such interference in a residential installation. However, there is no guarantee that interference will not occur in a particular installation. If the meter does cause interference to radio or television reception, which can be determined by turning the unit off and on, the user is encouraged to try to correct the interference by one or more of the following measures:

- Reorient the receiving antenna.
- Relocate the meter with respect to the receiver
- Move the meter away from the receiver.
- Plug the meter into a different outlet so that the meter and receiver are on different branch circuits.

If necessary, the user should consult the manufacturer or an experienced radio/television technician for additional suggestions. The user may find the following booklet prepared by the Federal Communications Commission helpful:

"How to Identify and Resolve Radio-TV Interference Problems."

This booklet is available from the U.S. Government Printing Office, Washington, D.C. 20402, Stock No. 004-000-00345-4.

# REPAIR AND SERVICE

A Return Authorization Number must be obtained from Orion Laboratory Products Customer Service before returning any product for in-warranty repair, replacement or credit. Contact ORION by calling 1-800-225-1480 (USA outside Mass.) or 617-864-5400. Outside the USA and Canada consult your local in-country, authorized Orion Laboratory Products Distributor for product service information.

# OPTIONAL ACCESSORIES

| Cat. No. | Description |
|---|---|
| 815600 | ROSS® epoxy body, bulb guard combination pH electrode |
| 9104BN | Laboratory grade combination pH electrode (BNC connector) |
| 910600 | GX-series epoxy body, gel-filled combination pH electrode (BNC connector) |
| 912600 | GX-series epoxy body, gel-filled flask combination pH electrode (BNC connector) |
| 913600 | GX-series epoxy body, gel-filled flask combination pH electrode (BNC connector) |
| 915600 | RX-series refillable, epoxy body combination pH electrode (BNC connector) |
| 9162BN | Combination pH electrode with rugged bulb (BNC connector) |
| 9163BN | Combination pH electrode with needle shape (BNC connector) |
| 910004 | pH 4 buffer packets, box of 25 packets, each packet making 200 ml of buffer |
| 910007 | pH 7 buffer packets, box of 25 packets, each packet making 200 ml of buffer |
| 910009 | pH 9 buffer packets, box of 25 packets, each packet making 200 ml of buffer |
| 910104 | pH 4.01 buffer, 475 ml bottle |
| 910107 | pH 7.00 buffer, 475 ml bottle |
| 910110 | pH 10.01 buffer, 475 ml bottle |
| 970899 | Dissolved oxygen electrode |
| 910002 | Electrode holder |
| 090033 | U.S. Standard to BNC connector adapter |
| 090045 | Shorting plug |
| 020120 | 110V AC line adapter |
| 020121 | 220V AC line adapter |
| 020041 | Shoulder strap and meter holder for *hands free* operation |
| 020042 | Carrying case with foam insert, without meter or accessories |
| 020043 | Support rod and guide |
| 020044 | Accessory pack includes two 60 ml bottles and one 150 ml beaker |
| 020045 | Electrode rod stand for bench-top meter use outside carrying case |

If the line converters that Orion supplies, Cat. No. 020121 and 020120, are not available, any line converter meeting the following specifications may be used.

## Converter for 120 VAC to 9 VDC

This specification describes an AC-to-DC power supply for use with ORION products.

### Electrical Specifications

1. The power supply shall furnish rectified, filtered, unregulated DC voltage.
2. The input voltage shall be 100-130 VAC, 47-63 Hz.
3. The open circuit output voltage shall not exceed 15.5 VDC at an input voltage of 130 VAC, 60 Hz.
4. The unit shall produce an output voltage not less than 9.0 VDC with a load of 200 MADC at an input voltage of 115 VAC, 60 Hz.

### Mechanical Specifications

1. The power supply shall plug into two blade wall outlets that are standard in North America for 115 VAC service.
2. Output cord shall terminate in a standard 3.5 mm diameter phone plug. The tip shall be negative, the sleeve positive.

### Safety

1. The power supply shall be UL listed and CSA approved.

## Converter for 220 VAC to 9 VDC

This specification describes an AC-to-DC power supply for use with ORION Products.

### Electrical Specifications

1. The power supply shall furnish rectified, filtered, unregulated DC voltage.
2. The input voltage shall be 200-240 VAC, 47-63 Hz.
3. The open circuit output voltage shall not exceed 15.5 VDC at an input voltage of 240 VAC, 50 Hz.
4. The unit shall produce an output voltage not less than 9.0 VDC with a load of 200 MADC at an input voltage of 220 VAC, 50 Hz.

### Mechanical Specifications

1. The power supply shall plug into wall outlets that are appropriate for the area.
2. Suggested cord length is 1.5 meters long.
3. Output cord shall terminate in a standard 3.5 mm diameter phone plug. The tip shall be negative, the sleeve positive.

# SPECIFICATIONS

The SA 210 Portable pH/mV Meter (Orion Cat. No. 021000) is for hand-held and bench-top use.

**Modes**
pH, mV, $O_2$ (with $O_2$ probe)

**pH range**
pH 0 to 14

**pH resolution**
0.01

**mV range**
−1999 to +1999 mV showing negative polarity sign

**mV resolution**
1 mV

**Temperature compensation**
Manual

**Sample temperature range**
−5 to 105°C

**Input impedance**
>100,000 megohms

**Instrument drift**
<50 microvolts/°C

**Input bias current**
< ±1 pico amp at 25°C and < ±4 pico amps over full operating range

**Environmental requirements**
5 to 45°C and 5 to 80% relative humidity, non-condensing

**Isopotential point**
pH 7 (fixed)

**Power requirement**
One 9 volt battery. Optional 110 or 220 volt line adapter(s) available for AC line use.

**Inputs**
BNC combination and separate pin tip reference jack

**Meter dimensions**
14 cm X 14 cm X 4 cm

**Meter weight**
0.5 kg

**Meter case**
Splash-proof, chemical resistant

**Carrying case dimensions**
38.1 cm x 27.9 cm x 11.4 cm

**Carrying case weight**
1.8 kg

# Appendix B

## YSI Model 3000 T-L-C Meter Instruction Manual

# YSI MODEL 3000 T-L-C METER INSTRUCTION MANUAL

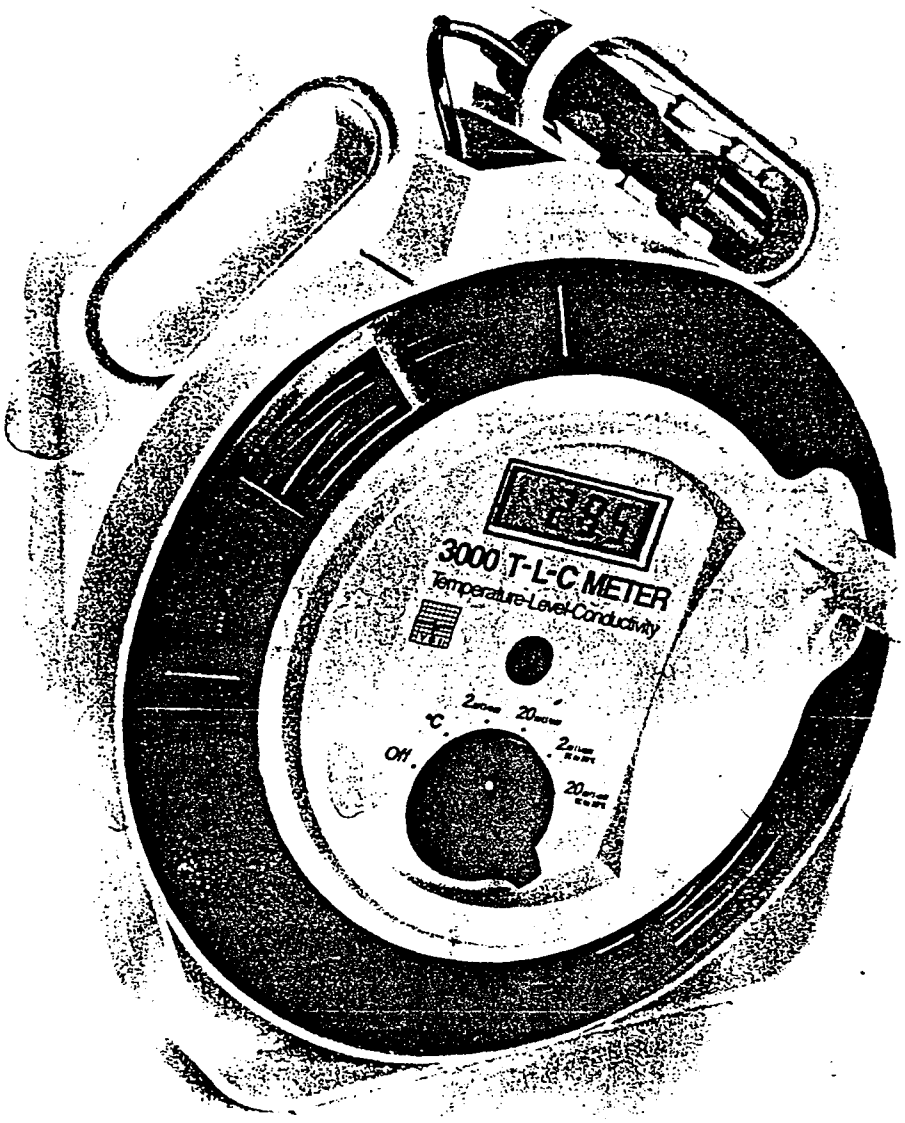


Scientific Division
Yellow Springs Instrument Co., Inc.
Yellow Springs, Ohio 45387 USA • Phone 513 767-7241 • Telex 205437

PRICE $10.00

## TABLE OF CONTENTS


GENERAL DESCRIPTION
- The YSI Model 3000 System . . . 1
- Probe Description . . . 1

SPECIFICATIONS . . . 2

ACCESSORIES . . . 2

REPLACEMENT PARTS . . . 2

OPERATION
- Temperature . . . 3
- Conductivity . . . 3
- Temperature Compensated Conductivity . . . 3
- Level . . . 3
- Errors . . . 3

MAINTENANCE
- Instrument . . . 4
- Probe . . . 5

CALIBRATION
- Instrument . . . 6
- Probe . . . 6

WARRANTY AND SHIPPING INFORMATION . . . 6

CIRCUIT DESCRIPTION . . . 7

TABLES . . . 7

AMPLIFIER BOARD AND SWITCH BOARD COMPONENTS . . . 8

SCHEMATIC . . . 9

# GENERAL DESCRIPTION

### The YSI Model 3000 System

The YSI Model 3000 T-L-C Meter is a self-contained field instrument and probe system that measures temperature, water level, conductivity and temperature compensated conductivity for water quality applications.

The digital meter uses a 3½ digit LCD with ½ inch high characters for easy reading. This watertight instrument is housed in the center of the easy-to-use cable reel and can be removed when necessary for replacement of batteries. A low battery indicator signals when the batteries need to be changed. The case is made of tough molded nylon and ABS. It is bright yellow for easy visibility. Abbreviated instructions are printed on the back of the instrument. An integral clipboard offers convenience in carrying papers and notes.

The probe is designed to fit easily into well boreholes, but is equally functional in general surface water applications. The probe and cable are of materials generally accepted for borehole use.

Temperature is measured by means of a precision thermistor assembly built into the probe housing, and is expressed in degrees Celsius (°C).

Conductivity is displayed in millimhos/centimeter (m℧/cm). The YSI Model 3000 is direct reading for conductivity with a sensor which has a cell constant of K = 5.0/cm. Overrange is indicated by a 1 followed by blank spaces on the display.

By convention, the conductivity of a solution is referenced to 25°C. Two temperature compensated conductivity ranges are provided on the Model 3000 which permit the reading to be corrected to 25°C. This automatic correction uses a temperature coefficient of 2%/°C*, calculated by the following formula:

$$\text{Compensated Conductivity} = \frac{\text{Uncompensated Conductivity}}{[(P/4\%)(.04T - 1)] + 1}$$

T = temperature in °C
P = temperature coefficient (2%/°C)

The probe cable is marked at one foot intervals. When the probe is lowered into a well casing, level can be easily determined by watching the instrument display for a significant rise in the reading as the sensor comes into contact with the water. Level may then be read directly from the cable.

### Probe Description

The YSI Model 3050 is an integral conductivity/temperature probe of rigid and durable chlorinated polyvinyl chloride. Its stainless steel weight facilitates lowering it into a borehole or well casing. The CPVC body is 1 inch in diameter by 4¾ inches in length.

Two platinized electrodes measure conductivity, and a precision thermilinear thermistor measures temperature.

A 150 foot polyurethane jacketed cable is attached to the probe body to permit deep immersion. This four conductor cable is marked every foot with numbers and a pointer in the form of the letter V to indicate the depth of the probe. A watertight MS type connector terminates the cable.

The probe is accurate for temperature changes in 40 to 60 seconds, and to conductivity changes in 10 seconds.

*Recommended in *Official Methods of Analysis of the Association of Official Analytical Chemists*, Ed. Sidney Williams, 14th edition, 1984, Arlington.

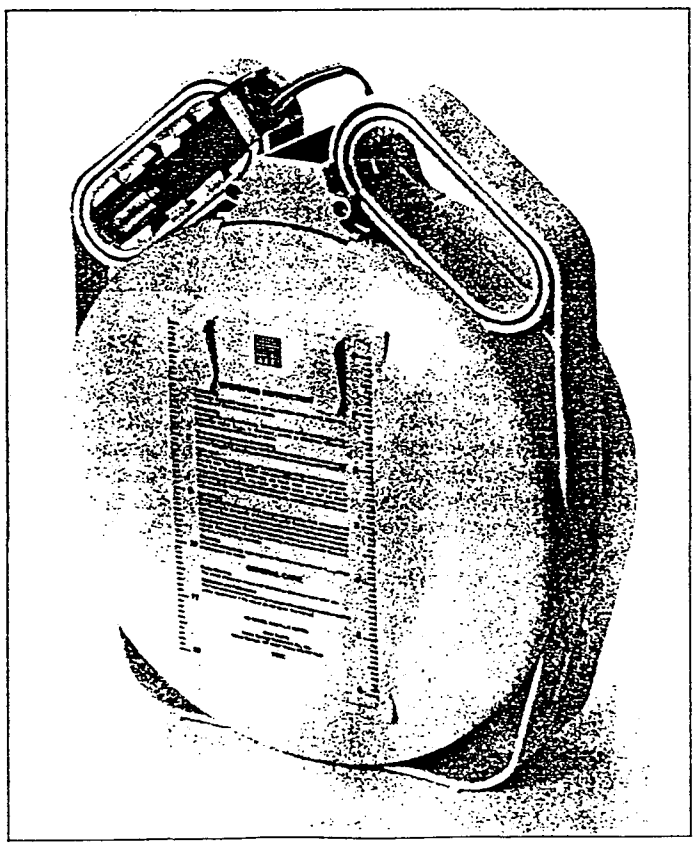

Back view of the Model 3000, showing the Instruction Label.

## SYSTEM SPECIFICATIONS

### Conductivity

*Ranges:* 0.0 through 1.999 m℧/cm conductivity
0.0 through 19.99 m℧/cm conductivity

0.0 through 1.999 m℧/cm conductivity temperature compensated to 25°C.
0.0 through 19.99 m℧/cm conductivity temperature compensated to 25°C.

*Accuracy of Conductivity Measurements:* ± 3% of full scale at 25°C.

*Accuracy of Temperature Compensated Conductivity Measurements:* ± 4% of full scale over normal ambient temperature range.

*Temperature Compensated Conductivity:* automatically corrected to 25.0°C (77.0°F) with a temperature coefficient of 2%/°C.

*Resolution:* 1 part in 2000 in conductivity or temperature compensated conductivity.

### Temperature

*Measurement Range:* – 5.0 to 50.0°C (23.0 to 122.0°F). Measurements beyond this range will not be within specification accuracy.

*Accuracy of Temperature Measurements:* ± 0.3°C.

*Resolution:* 0.1°C.

### Probe

*Cable Length:* 150 feet ± .3 feet: ± .1 foot per 50 feet

*Cell Constant:* K = 5.0/cm ± 2%, at 25.0°C (77.0°F), at 0.0 to 20.00 m℧/cm, referenced to a 0.01 normal KCl solution.

### Instrument

*Size:* 31.2 h by 25.4 w by 15.2 d centimeters (12.3 h by 10.0 w by 6.0 d inches)

*Weight:* 3.4 kilograms (7.5 pounds) maximum.

*Ambient Operating Temperature Range:* 0.0 to 50.0°C (32.0 to 122.0°F)

*Humidity:* Will operate under any humidity condition as long as seals are intact and dessicant is in place.

*Watertight:* Impervious to rain or well water (tested according to procedures in MIL-T-28800 C)

*Shock and Vibration:* Shock tested to 30 G and vibration tested to 3 G (per MIL-T-28800 C)

*EMI:* Complies with FCC emanation rules (47CFT part 15 subpart J) as applicable for Class A and Class B environments

### Battery

*Voltage:* 9 VDC (six 1.5 VDC heavy-duty "C" cells)

*Indicator:* display will indicate "BAT" when combined batteries fall below 7.2 ± 0.2 VDC; approx. 8 hours of use left.

*Life:* 1200 hours minimum, at 4 hours per day use. Alkaline batteries will provide approximately 1700 hours of use.

## ACCESSORIES

3040 Test Probe
3045 Platinizing Instrument
3050 Probe and Reel Assembly
3140 Platinizing Solution
3167 Conductivity Calibrator Solution, 1 m℧/cm, 8 one pint bottles
3168 Conductivity Calibrator Solution, 10 m℧/cm, 8 one pint bottles

Accessories may be purchased from your YSI dealer.

## REPLACEMENT PARTS

| | | | |
|---|---|---|---|
| 060885 | Probe Weight | 060857 | Knob |
| 060854 | Switch PC Board | 060845 | Amplifier PC Board Assembly |
| 060852 | 1⅜" O-ring | 060851 | 6¼" O-ring |
| 001495 | Switch Nut | 060829 | ⅞" O-ring |
| 060836 | Dessicant | 060850 | ¼-turn Stud |
| 060923 | Maintenance Kit | | |

Replacement parts may be purchased from your YSI dealer or directly from the YSI Product Service Department.

### Required Notice

*The Federal Communications Commission defines this product as a computing device and requires the following notice:*

This equipment generates and uses radio frequency energy and if not installed and used properly, may cause interference to radio and television reception. It has been type tested and found to comply with the limits for a Class A or Class B computing device in accordance with the specification in Subpart J of Part 15 of FCC Rules, which are designed to provide reasonable protection against such interference in a residential installation. However, there is no guarantee that interference will not occur in a particular installation. If this equipment does cause interference to radio or television reception, which can be determined by turning the equipment off and on, the user is encouraged to try to correct the interference by one or more of the following measures:

- reorient the receiving antenna
- relocate the computer with respect to the receiver
- move the computer away from the receiver
- plug the computer into a different outlet so that the computer and receiver are on different branch circuits

If necessary, the user should consult the dealer or an experienced radio/television technician for additional suggestions. The user may find the following booklet prepared by the Federal Communications Commission helpful: "How to Identify and Resolve Radio-TV Interference Problems." This booklet is available from the U.S. Government Printing Office, Washington, D.C. 20402, Stock No. 0004-000-00345-4.

# OPERATION

### Temperature

(a) To measure temperature, set the function switch to °C.
(b) Completely submerge the probe in the water to be measured.
(c) Once submerged, allow time for the probe to come to temperature equilibrium with the water. This usually takes about three minutes.
(d) Read the displayed value after the reading is stable.

### Conductivity

(a) To measure conductivity, set function switch to **2 m℧/cm**.
(b) Completely submerge the probe and observe the displayed value after reading is stable. This usually takes from 10 to 20 seconds.
(c) If the overrange signal is displayed (1.---), then the conductivity of the water is in excess of 1.999 m℧/cm. Reset the switch to **20 m℧/cm**. If the overrange signal is still displayed, the conductivity is greater than 19.99 m℧/cm.
Measurements are not temperature compensated in this mode.

### Temperature Compensated Conductivity

(a) To measure temperature compensated conductivity, set the function switch to **2 m℧/cm TC to 25°C**.
(b) Completely submerge the probe and allow sufficient time for it to reach equilibrium with the water. This usually takes from 10 to 20 seconds.
(c) Observe the displayed value after the reading is stable.
(d) If the overrange signal is displayed (1.---), then the temperature compensated conductivity of the water is in excess of 1.999 m℧/cm. Reset the switch to **20 m℧/cmTC to 25°C**. If the overrange signal is still displayed, the conductivity is greater than 19.99 m℧/cm.

Table 1 shows corrections for 2%/°C change from 25°C at 1 m℧/cm.
Table 2 shows correction values applied to two typical solutions.

### Level

(a) To measure water level, set the function switch to any of the conductivity modes.
(b) Lower the probe into the well or borehole just until the displayed value rises suddenly from about zero to some higher value. The probe begins to measure conductivity when the conductivity cell electrodes just touch the water. The reading at this point will be about ½ of the actual conductivity. When the probe is completely submerged, the reading will be about double the value displayed at the original contact point, where the probe just touches the water.
(c) Raise the probe slowly out of the water until the displayed value goes back to approximately zero.
(d) Lower the probe very slowly until the reading rises suddenly to about ½ the full conductivity value read above.
(e) Compare cable marking to the well reference point to determine the water level. Read the number of feet from the probe cable and measure tenths and hundredths of a foot with the .5 foot scale printed on the instruction label. Note that the rule is calibrated in tenths and hundredths of a foot and is designed to make it easy either to add or to subtract hundredths of a foot from a cable foot marker.

**REWINDING THE CABLE:** The cable winds into its housing like fishing line onto a reel. However, since there is no level-wind mechanism to distribute the probe cable evenly, the user must control its winding and unwinding. Regulate the motion of the cable by feeding it through your fingers. Don't let the reel spin too rapidly when paying out cable; distribute the cable evenly over the reel when reeling it back in.

### Errors

The maximum error of a meter reading will be a worst case combination of temperature and conductivity specification tolerances. Errors can be minimized by calibrating the Model 3000 with YSI conductivity standards. (See Calibration.)

(a) Temperature – The maximum error in this instrument when used to measure temperature between the measuring limits of –5.0° and 50.0°C is ±0.3°C. Example:
Meter Reading: 16.5°C
Error: ±0.3°C
Accuracy: 16.5 ± .3°C
(b) Conductivity – The maximum instrument error (not including temperature error) when used to measure conductivity in either range is ±3% of the full scale range limit. This represents the combined instrument and probe errors. Example:
Meter Reading: 9.00 m℧/cm
% Error: .03 × 20.00 m℧/cm
Accuracy: 9.00 m℧/cm ± .60 m℧/cm
(c) Temperature Compensated Conductivity: The maximum error when measuring temperature compensated conductivity in either range is ±4% of the full scale range limit. This represents the combined instrument, probe and temperature errors. Example:
Meter Reading: 11.00 m℧/cm
% Error: .04 × 20.00 m℧/cm
Accuracy: 11.00 m℧/cm ± .80 m℧/cm
(d) Level: The maximum error for water level measurement is ±1 inch/50 feet. This represents the combined errors due to the cable foot indicators, the 6 inch rule on the label and the cable stretch when fully suspended in a well casing. Example:
Cable Reading: 87.4 feet
Error: ± .2 feet
Accuracy: 87.4 ± .2 feet

# MAINTENANCE

**Instrument**

The Model 3000 requires only battery replacement, dessicant replacement, seal replacement and occasional cleaning. A kit for annual maintenance is available from your dealer or from YSI. See Replacement Parts.

*Battery Replacement:* The six heavy-duty "C" cell batteries supplied with the instrument will last approximately 1200 hours when used about 4 hours a day. Alkaline batteries will provide about 1700 hours of use. When BAT appears in the upper left corner of the display, about 8 hours of use remain. However, it is wise to replace the batteries as soon as possible after this signal appears. Follow these procedures:

(a) Rotate the reel handle to uncoil about one foot of the cable.
(b) Next, with coin or screwdriver, turn in a counterclockwise direction the ¼-turn screw located in the face of the instrument.
(c) Remove the electronics and probe reel assemblies from the housing and disconnect the probe connector (located on the back of the electronics assembly) by turning its sleeve counterclockwise. Carefully note, or mark, the side of the reel into which the electronics assembly is inserted; the probe connector will not reach the jack, or the reel will not properly engage into the handle if the reel is reversed.
(d) Remove the nine screws on the back of the electronics assembly.
(e) Remove the probe reel from the electronics assembly.
(f) Separate the front and back halves, being careful not to damage the three o-rings that provide watertight integrity.
(g) Remove the old batteries and replace with new batteries in the battery holders. Be careful to observe the correct polarity; red indicators mark the positive terminals. Turn on the unit after the batteries are installed to make sure that the instrument is in working order before it is reassembled.
(h) Remove, dry and replace, or install a new dessicant container.
(i) Reassemble the instrument by reversing the dissassembly steps. Be very careful not to damage or misalign the o-rings.

Electronics Housing, showing battery placement

*Dessicant Replacement:* When the case is opened for any reason, the interior will have the same relative humidity as the surrounding air. If resealed and later operated at a lower temperature, internal condensation might occur. The dessicant prevents this. The dessicant container should be removed for replacement annually. Do not remove the new dessicant container from its protective bag until ready for instrument reassembly.

*Seal Replacement:* To insure watertight integrity, the three o-rings and nine screw seals should be replaced annually. See Battery Replacement for disassembly and reassembly procedures. The third o-ring is located on the socket side of the MS type connector.

*Cleaning:* When it is necessary to clean off dirt and collected films, simply wipe the case with a solution of liquid detergent and water. Rinse the instrument with clean water. Do not disassemble. If a stubborn stain cannot be removed with soap and water, alcohol may be used. Do *not* use ketones or chlorinated solvents to clean the case as they will damage it.

*Storage:* When the Model 3000 is to be stored for more than a few months, the batteries should be removed to reduce the risk of corrosion damage.

**Probe**

*Cleaning:* The probe cable may be cleaned by wiping with a wet sponge. Isopropyl alcohol may be used for stubborn residues.

The probe must be kept clean at all times to assure proper operation and accuracy. A dirty probe will contaminate the sample and cause the conductivity to change. Any of the foaming acid tile cleaners such as Dow Chemical "Bathroom Cleaner" will clean the probe adequately. When a stronger cleaning preparation is required, use a solution of equal parts of isopropyl alcohol and 10 normal HCl. Do not clean the probe in aqua regia or in any solution known to etch platinum or gold.

Dip the probe into the cleaning solution and agitate for two or three minutes. Rinse the probe in several changes of distilled or deionized water. Inspect the platinum black electrode coating to determine whether replatinizing is required. CAUTION: Do not use anything to touch the electrodes inside the probe body. Platinum black is soft and can be easily scraped off.

*Storage:* It is best to store conductivity probes in deionized water. Probes stored in water require less frequent platinizing. When probes are stored dry, it is necessary to soak them in deionized water for 24 hours before use.

*Replatinizing:* If cleaning does not restore probe performance, or if flaking or other defects in the platinum black coating are apparent, replatinizing is necessary. A YSI 3045 Platinizing Instrument and YSI 3140 Platinizing Solution are available for this procedure. Clean the probe thoroughly and replatinize as follows:

(a) Uncoil about two feet of cable and remove the electronics and probe reel assemblies from the instrument housing. Remove the probe cable connector from its jack.

(b) Immerse the probe's electrodes in the platinizing solution, either in the bottle provided, or in another suitable, non-reactive vessel. Do not submerge the entire probe body; the thermistor housing located beside the bend relief spring should not come in contact with the platinizing solution.

(c) Connect the probe's MS connector to the Platinizing Instrument and hand tighten the connector sleeve. Once this connection is made, the LED on the Model 3045 will light to indicate that there is good continuity to the electrodes and enough life in the battery to complete the replatinizing. If the LED does not light, replace the battery.

(d) Using the slide switch, reverse the polarity every 30 seconds until both electrodes are covered with a thin layer of platinum black (about 4 to 5 minutes). Do not over-platinize.

(e) Remove the probe from the solution; disconnect it from the Platinizing Instrument.

(f) Reassemble and reconnect the probe and reassemble the YSI 3000. Rinse the probe electrodes with flowing tap water for about 15 minutes followed by a distilled water rinse for 2 minutes.

(g) Return the platinizing solution to its container. This 2 ounces of solution should be sufficient for 50 treatments. It is expensive and should not be wasted. Replace it only when it will no longer deposit a layer of platinum black.

(h) Test probe and instrument with calibration solution. (See CALIBRATION.)

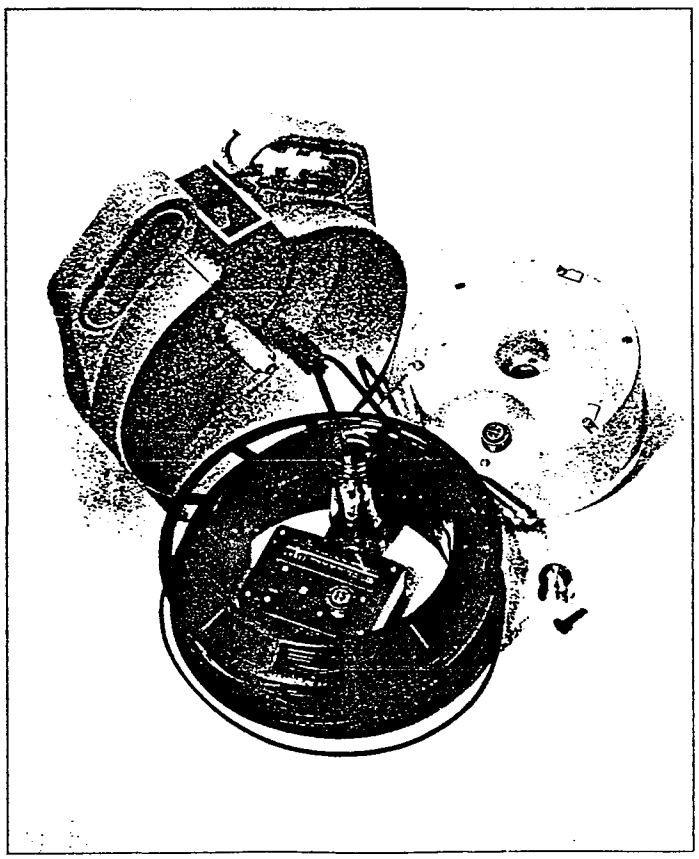

Replatinizing the Probe

# CALIBRATION

### Instrument

The Model 3000 is calibrated at the factory. There are no user adjustments inside the instrument. Should you suspect that your instrument is out of calibration, either send it to the factory for calibration or test it with the YSI 3040 Test Probe.

Remove the electronics and probe reel assemblies from the instrument housing and disconnect the probe.

First, check for the following readings with no probe connected:

| SWITCH POSITION | CORRECT READING |
|---|---|
| °C | −34.0 ± .2°C |
| 2 m℧/cm | .000 ± .002 m℧/cm |
| 20 m℧/cm | 0.00 ± .02 m℧/cm |
| 2 m℧/cm TC to 25°C | 1.--- |
| 20 m℧/cm TC to 25°C | 1.--- |

If these readings are observed, then plug the YSI 3040 Test Probe into the probe jack. The 3040 is a probe substitute that simulates a temperature and a conductivity. Test for the following readings:

| SWITCH POSITION | CORRECT READING |
|---|---|
| °C | 15.1 ± .2°C |
| 2 m℧/cm | 1.563 ± 0.020 m℧/cm |
| 20 m℧/cm | 1.56 ± 0.20 m℧/cm |
| 2 m℧/cm TC to 25°C | 1.954 ± 0.040 m℧/cm |
| 20 m℧/cm TC to 25°C | 1.95 ± 0.40 m℧/cm |

Remove the Test Probe and reassemble the instrument.

If the instrument failed to meet these specifications, refer to Warranty and Shipping.

Electronics Housing with Test Probe installed

### Probe

The YSI 3050 Probe is calibrated at the factory. The cell constant of any conductivity probe may vary slightly with the conductivity of the solution being measured. Calibration may also be affected by electrode fouling, the need for replatinizing, or by mechanical shock. The Model 3050 Probe can be calibrated together with the Model 3000 Instrument as a system with YSI 3167 or 3168 Conductivity Calibrator Solutions. These solutions are specially packaged in unbreakable plastic one pint bottles for field use. They are packaged eight bottles to a box. The solutions are manufactured to approximately 1 m℧/cm or 10 m℧/cm concentrations with the accuracy printed on each label.

Confirm the calibration of the YSI 3000 system as follows:

(a) Rinse the probe with some of the solution to remove any contamination. Be careful to leave not less than 8 ounces of the solution in the bottle; it must be at least half full.

(b) Immerse the probe in the remaining solution, in its own bottle, and switch to either 2 m℧/cm TC to 25°C or to 20 m℧/cm TC to 25°C according to the range necessary for the solution used.

(c) Take note of the displayed value. By comparing this to the conductivity calibrator solution value, the accuracy of the YSI 3000 can be determined. If the displayed value is within 4% of the calibrator value, then the Model 3000 is within its specifications and can be used. The percent error calculated can also be used as a correction factor to improve the accuracy of measurement of the samples being tested. If the error is greater than 4%, the instrument should be tested with the YSI 3040 Test Probe (see Instrument Calibration). If it passes these tests, replatinize the probe (see Probe Maintenance).

The following shows how to make a corrected determination of improved accuracy. In this example, YSI 3167 Conductivity Calibrator Solution is used, and the T-L-C Meter is set to 2 m℧/cm TC to 25°C.

$$\text{Corrected Sample Value} = \frac{\text{Calibrator Value}}{\text{Displayed Value}} \times \text{Sample Value}$$

Displayed Value = .978 m℧/cm
Calibrator Value = .996 m℧/cm
Sample Value = .634 m℧/cm

(.996 m℧/cm) / (.978 m℧/cm) × (.634 m℧/cm) = .646 m℧/cm

(d) Once the accuracy of the Model 3000 has been determined, discard the calibrator solution. It has been contaminated and should not be reused.

## WARRANTY AND SHIPPING INFORMATION

All YSI products are warranted for one year against defects in workmanship and materials when used for their intended purposes and maintained according to manufacturer's instructions. Damage due to accidents, misuse, tampering, or failure to perform prescribed maintenance is not covered. The warranty period for chemicals and reagents is determined by the expiration date printed on their labels. This warranty is limited to repair or replacement.

### If Service Is Required:

Contact the YSI dealer from whom you bought the instrument, or the YSI Product Service Department. You may also call the factory; YSI's toll free number is (800) 343-4357 (343-HELP). Report the date purchased, model, serial number, and the nature of the failure. If the repair is not covered by warranty, you will be notified of the charge for repair or replacement.

When shipping any instrument, be sure that it is properly packaged and insured for complete protection. In communications regarding this instrument or accessories please mention the model and serial number.

## CIRCUIT DESCRIPTION

Three board assemblies are used. By means of J101, J103 and P102, the Amplifier Board is connected to P201 on the Switch Board, to P302 on the probe, and to J402 on the Display Board. Each board can be purchased separately (see Replacement Parts).

*Switch PC Board:* This board controls the signal switching through S201, a 4p-6t switch. Section 1 of the switch controls the decimal point and the applied power from BT 101 through BT 106. When the switch is in other than the **OFF** mode, Q101 is forward biased via Q201, Q202 or Q203 and R201. This in turn generates + V for the instrument with − V always being present. This board also provides space for selected resistors. Other switch functions are described below.

*Amplifier PC Board:* This board controls signal conditioning for the instrument through the use of four basic circuits. U104, Q102, R114 and R115 take the 40 KHz clock from the display (M401) and frequency divide the signal down to 1000 (Y) and 2000(X) Hz. The 1000 Hz signal in turn is voltage limited and shaped by U101A. − B, and − C, R101, R102, R103 and C101 which form a modulator circuit. This circuit generates a 200 mv p/p square wave which will be the reference for the rest of the signal conditioning. This square wave is regulated to 100 mv DC by R105 and C103 for the temperature measuring circuit.

U102A and U102B are operational amplifiers that determine the voltage level to the display in proportion to the measured resistance of the thermistors in the probe. Gain is determined by R107, R109, R110, R111 and R112. C104, C107, and C108 provide circuit stability.

R301 and R302 are thermistors and with R303 form the temperature measuring sensor in the probe. When the instrument is in the temperature compensating modes, R202, R205 and R206 are placed in the circuit to form voltage divider networks which change the reference voltage to the display in proportion to the temperature shift away from 25°C. This is accomplished by sections 2 and 3 of S201. R106 buffers the output to the display.

The 200 mv square wave is coupled to the conductivity measuring circuit via R104 and C102. U105 is an operational amplifier which acts as a buffer and gain circuit for the conductivity probe. The gain of this circuit is determined by section 4 of S201 which selects R203 or R204 to set the instrument range.

A square wave is used across the electrodes (K301 and K302) of the probe to avoid a polarizing field between them.

U103, U101-d, C105 and C106 form a demodulating circuit using the 1000 and 2000 Hz signals to change the square wave into a DC voltage proportional to the conductivity of the fluid tested. R113 is used as a buffer to isolate the conductivity and temperature circuits. C110 helps provide circuit stability.

*Display PC Board:* This board has no user serviceable components. It supplies a 40 KHz signal for the amplifier board as well as the voltage common for the entire system. This common is 2.8 VDC below + V and is held constant to the rest of the "lo" inputs. The display receives the analog input and compares it with the 100 mv dc reference voltage supplied in the temperature circuit and in turn determines the value to be displayed by proportional comparison. When temperature compensation is selected, the reference voltage changes proportionally with the temperature.

## TABLES

**1 Temperature Correction Values Used for Automatic Temperature Compensation By the Model 3000**

| TEMPERATURE °C | CONDUCTIVITY in m℧/cm TC to 25°C |
|---|---|
| −5 | 2.500 |
| 0 | 2.000 |
| +5 | 1.667 |
| 10 | 1.429 |
| 11 | 1.389 |
| 12 | 1.351 |
| 13 | 1.316 |
| 14 | 1.282 |
| 15 | 1.250 |
| 16 | 1.219 |
| 17 | 1.191 |
| 18 | 1.163 |
| 19 | 1.136 |
| 20 | 1.111 |
| 21 | 1.087 |
| 22 | 1.064 |
| 23 | 1.042 |
| 24 | 1.020 |
| 25 | 1.000 |
| 26 | .980 |
| 27 | .962 |
| 28 | .943 |
| 29 | .926 |
| 30 | .909 |
| 35 | .833 |
| 40 | .769 |
| 45 | .714 |
| 50 | .667 |

**2 Temperature Correction Value of Two Typical Solutions (0.007 Normal and 0.089 Normal Potassium Chloride)**

| TEMPERATURE | 0.007N KCl 1.000 m℧/cm | 0.089N KCl 10.00 m℧/cm |
|---|---|---|
| −5 | .455 | 4.71 |
| 0 | .541 | 5.54 |
| +5 | .628 | 6.39 |
| 10 | .718 | 7.26 |
| 11 | .736 | 7.44 |
| 12 | .754 | 7.61 |
| 13 | .773 | 7.79 |
| 14 | .791 | 7.97 |
| 15 | .810 | 8.15 |
| 16 | .829 | 8.33 |
| 17 | .847 | 8.52 |
| 18 | .866 | 8.70 |
| 19 | .885 | 8.88 |
| 20 | .904 | 9.07 |
| 21 | .923 | 9.25 |
| 22 | .942 | 9.44 |
| 23 | .961 | 9.62 |
| 24 | .981 | 9.81 |
| 25 | 1.000 | 10.00 |
| 26 | 1.020 | 10.19 |
| 27 | 1.039 | 10.38 |
| 28 | 1.059 | 10.57 |
| 29 | 1.079 | 10.76 |
| 30 | 1.098 | 10.96 |
| 35 | 1.199 | 11.93 |
| 40 | 1.302 | 12.93 |
| 45 | 1.406 | 13.95 |
| 50 | 1.513 | 14.99 |

## AMPLIFIER BOARD AND SWITCH BOARD COMPONENTS

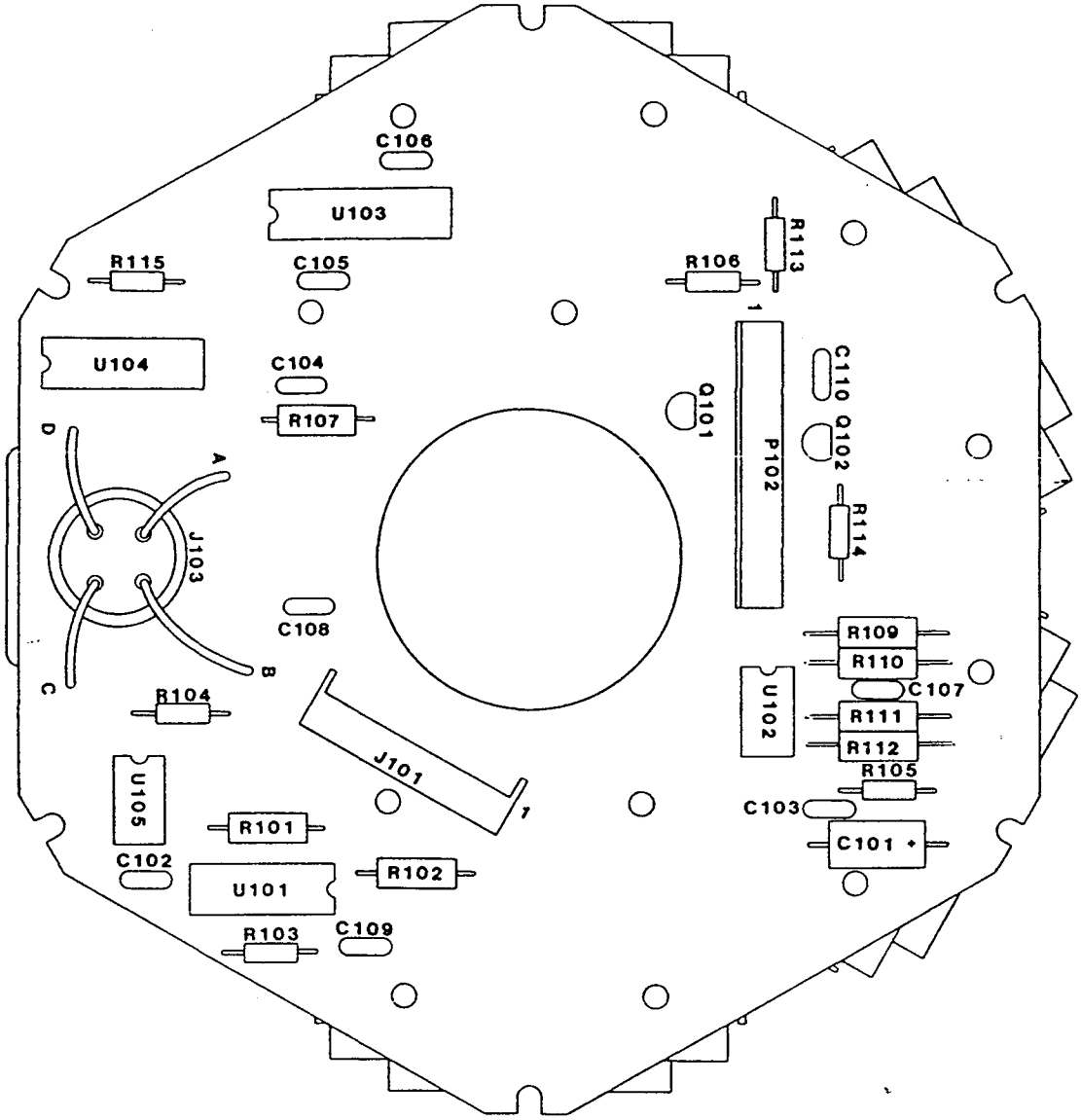


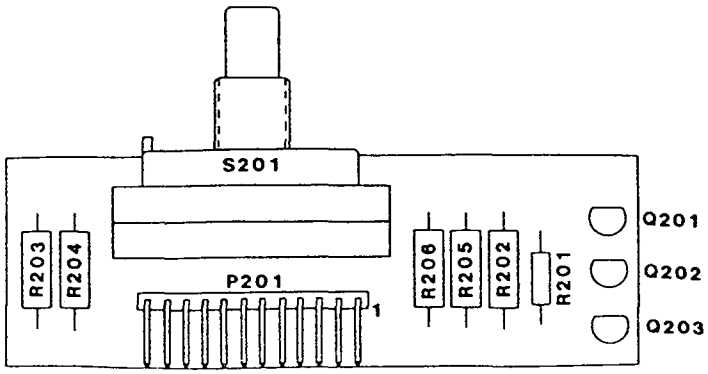

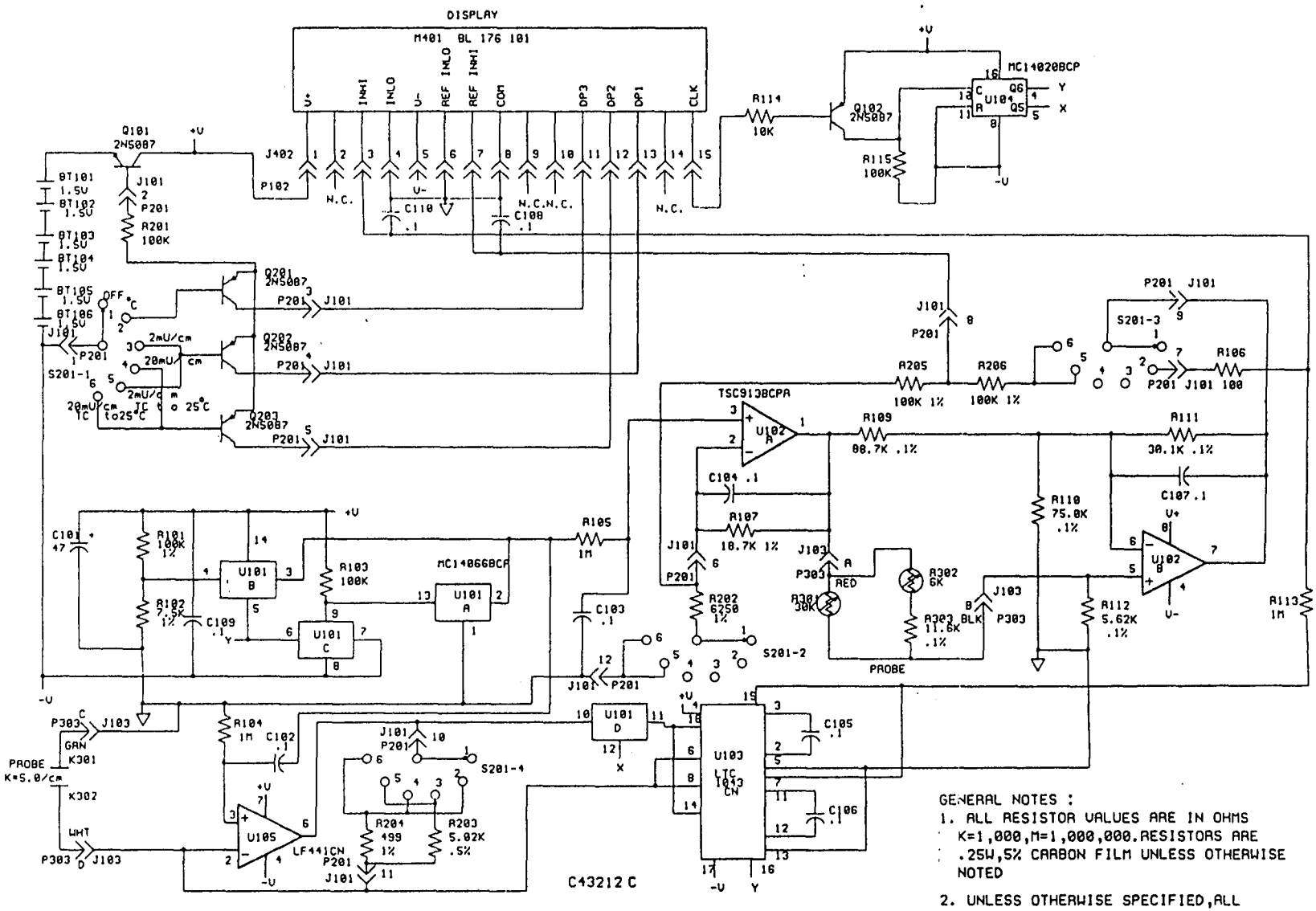


GENERAL NOTES :

1. ALL RESISTOR VALUES ARE IN OHMS K=1,000,M=1,000,000.RESISTORS ARE .25W,5% CARBON FILM UNLESS OTHERWISE NOTED
2. UNLESS OTHERWISE SPECIFIED,ALL CAPACITOR VALUES ARE IN uF
3. S201 SHOWN IN OFF POSITION

This schematic is representative only, and may be slightly different from the circuit in your instrument.

# Appendix C

# RAI Quality Assurance Plan

RAI

Resource Analysts, Inc.
Subsidiary of MILLIPORE
P.O. Box 778, One Lafayette Road
Hampton, NH 03842
(603) 926-7777

# QUALITY ASSURANCE OPERATIONS MANUAL

**TITLE: RAI Quality Assurance Manual**

Prepared By/Date: D. S. Newhouse March 13, 1990

Approved By/Date:

Doreen S. Newhouse — March 13, 1990
Q/A Officer — Date

Russell Sosek — March 13, 1990
Tech. Director — Date

Garrett N Pease — March 13, 1990
President — Date

| Section | Revision No. | Date |
|---|---|---|
| 1 | 0 | 7/88 |
| 2 | 0 | 7/88 |
| 3 | 5 | 3/90 |
| 4 | 0 | 7/88 |
| 5 | 0 | 7/88 |
| 6 | 1 | 9/89 |
| 7 | 1 | 9/89 |
| 8 | 0 | 7/88 |
| 9 | 1 | 3/90 |
| 10 | 0 | 7/88 |
| 11 | 0 | 7/88 |
| 12 | 0 | 7/88 |
| 13 | 0 | 7/88 |
| 14 | 0 | 7/88 |
| 15 | 0 | 7/88 |

Date of Issue: March 13, 1990

Supersedes No.: ALL

# TABLE OF CONTENTS

1.0 Introduction . . . . . 1
- 1.1 QA Policy and Objectives of the Program . . . . . 1
- 1.2 Quality Assurance Documents . . . . . 1
  - 1.2.1 QA Manual . . . . . 1
  - 1.2.2 Standard Operating Procedures Manuals . . . . . 2
  - 1.2.3 Project QA Manuals . . . . . 2
  - 1.2.4 Document Control, Distribution and Revision . . . . . 3

2.0 QA Organization and Personnel . . . . . 1
- 2.1 Within the Laboratories . . . . . 1
- 2.2 Outside the Laboratories . . . . . 4
- 2.3 Field Operations . . . . . 4
- 2.4 Test Animal Production . . . . . 4

3.0 Standard Practices . . . . . 1
- 3.1 Laboratory Safety . . . . . 1
- 3.2 Training . . . . . 2
- 3.3 Security and Confidentiality . . . . . 3
- 3.4 Traceability of standards, instrumentation, and data . . . . . 4
- 3.5 Accountability . . . . . 7
- 3.6 Sample Analysis . . . . . 8
- 3.7 Data Validation . . . . . 13
- 3.8 Documentation . . . . . 13
- 3.9 Audits, Inspections, Performance Evaluations and Corrective Action . . . . 13

4.0 Sample Custody . . . . . 1
- 4.1 Sample Receipt, Handling and Chain-of-Custody . . . . . 1
- 4.2 Sample Preservation and Storage . . . . . 2
- 4.3 Sample Disposal . . . . . 2

5.0 Materials and Apparatus . . . . . 1
- 5.1 Reagents, Solvents and Gases . . . . . 1
- 5.2 Laboratory Containers . . . . . 1
- 5.3 Instruments . . . . . 1

6.0 Calibration . . . . . 1

7.0 Analysis of Quality Control Samples . . . . . 1

8.0 Analytical Procedures . . . . . 1

9.0 Data Reduction, Validation and Reporting . . . . . 1

10.0 Records Management . . . . . 1

11.0 Corrective Action . . . . . 1

12.0 Internal QA/QC Audits and Reports to Management . . . . . 1

13.0 Directory of RAI Standard Operating Procedures. . . . . 1

14.0 Location List of Instruments and Manuals . . . . . 1
- 14.1 RAI GC/MS Instrumentation Laboratory . . . . . 1
- 14.2 RAI Inorganics Laboratory . . . . . 2
- 14.3 RAI Metals Instrumentation Laboratory . . . . . 3
- 14.4 RAI Metals Prep Laboratory . . . . . 3
- 14.5 ESI Instrumentation Laboratory . . . . . 3

15.0 Subcontracting . . . . . 1

# 1.0 Introduction

## 1.1 QA Policy and Objectives of the Program

The staff of Resource Analysts, Inc. and its subsidiaries is dedicated to the production of analytical results of known, appropriate, acceptable and documented quality. Our analytical and aquatic toxicology laboratories are fundamentally in the business of producing data. Our environmental field sampling and aquatic research organisms facilities produce samples and/or organisms from which data are ultimately generated. These data are subsequently used by our clients for purposes related to design, regulation, or evaluation of risk or liability. Often, these data will be the cornerstones of significant legal, public health or engineering decisions. The efforts of RAI must at all times be consistent with these needs, so that analytical results will be produced which are useful for the intended purpose.

RAI is committed to quality as priority number one. RAI stands committed to providing data of quality consistent with client needs and requirements. This commitment recognizes the need for data to be representative of the environmental conditions under consideration, and for data to be generated within a system of functions that meet applicable regulatory compliance criteria. To this end, RAI has developed a company-wide Quality Assurance (QA) Plan and maintains an ongoing QA Program. Our Quality Assurance Program contains provisions for establishing, maintaining and executing protocols which lead to results of known, appropriate and acceptable quality; documentation of these activities is an integral part of the QA program. No other concern will be permitted to interfere with the quality of data RAI provides to clients.

This manual describes the set of policies and principles which guide day-to-day operations. Specific protocols are included by reference and are contained in a series of volumes cited in Section 13.0 of this document.

## 1.2 Quality Assurance Documents

### 1.2.1 QA Manual

This document describes management policies related to operation of the analytical and aquatic toxicology laboratories, the environmental field sampling facility and the aquatic research organisms facility. It provides overall guidance regarding acceptable practices and discusses each element of the Quality Assurance Program. It functions as the Project QA Manual where no other Quality Assurance Project Plan, Statement of Work or other contractually mandated project plan has been specified. Adherence

to the practices described in this manual is required of all employees. This manual may be revised and/or superseded only with the written authority of the RAI President. Copies of this manual are controlled and distribution is administered by the QA Officer.

1.2.2 Standard Operating Procedures Manuals

All procedures related to sample collection, storage, preparation, analysis, disposal, data validation, data reporting and employee training and safety shall be contained in written Standard Operating Procedures Manuals (SOP's). Each SOP shall contain the elements outlined in Doc. 01-02-029, Preparation of SOP Manuals and QA Project Plans. All sections shall be structured in a step-wise manner using numbered paragraphs. All record-keeping requirements shall be described at each step in the SOP Examples of all forms used shall be included as tables or figures and referenced within the text. Preparation of SOP's shall be the responsibility of each Department Manager. SOP's shall be assigned a number from the Inventory List for SOP's (Section 13.0). This number shall become part of the document control number when the SOP is accepted for implementation by RAI corporate management. SOP's shall be reviewed and approved by the Group Manager (and Lab Director for all SOP's related to analytical procedures) and the QA Officer, and submitted by the QA Department to the Technical Director and the President for approval prior to implementation.

1.2.3 Project QA Manuals

Project QA Manuals shall be implemented as required for regulatory compliance. These shall include such documents as Quality Assurance Project Plans (QAPP's) and Study Protocols. For those projects which require specific QA/QC criteria, a QAPP which has been approved by a regulatory agency, usually the EPA, is provided to RAI by the client. A Study Protocol refers to an EPA-approved document which contains information regarding the conduct of an experimental analysis of a test substance regulated under TSCA or FIFRA as described in the legislation (40 CFR Part 160; 40 CFR Part 792).

1.2.4 Document Control, Distribution and Revision

1.2.4.1 Copies of SOP's, QAPP's, Study Protocols and other Project QA Manuals shall be maintained by the QA Department.

1.2.4.2 Provisions shall be made for documenting significant revisions to existing procedures.

## 2.0 QA Organization and Personnel

The QA organization and the assignment of quality assurance functions at RAI and its subsidiaries are designed to assure compliance with the "Good Laboratory Practices" (GLP's) rules as promulgated by the Environmental Protection Agency and published in the **Federal Register** as 40 CFR Part 160 (FIFRA), 40 CFR Part 792 (TSCA) and the Proposed Rules of December 28, 1987 (52 FR 48920 ff).

### 2.1 Within the Laboratories

2.1.1 It is the individual responsibility of each analyst and technician to perform their assigned tasks according to the specified SOP manuals and QA Project Plans. This includes responsibility for performing quality control analyses as specified in the method SOP and for entering the QC data in the appropriate method control file system. The analyst shall report out-of-control results to the Group Manager.

2.1.2 Group Managers shall assure that analysts and technicians are instructed in the requirements of the RAI QA Manual, study-specific QA Project Plans and SOP's for the analytical method or other procedure. Group Managers shall review sample QC data at frequent intervals designed to assure that QC analyses are being performed at the required frequency, that data are documented in the method control file system and that established corrective action procedures for out-of-control situations are followed and the results documented. It is the responsibility of the Group Manager to assure that data have been validated and reported to the Laboratory Director. Group Managers shall report to Laboratory Directors.

2.1.3 Laboratory Directors shall assure that Group Managers are instructed in the requirements of the RAI QA Manual, study-specific QA Project Plans and SOP's. Laboratory Directors approve standards for QC control limits for methods and work with Group Managers to bring out-of-control methods back to within established acceptance limits. Laboratory Directors shall also function as Study Directors or Project Officers as designated by the corporate President or Technical Director. Laboratory Directors shall report to a Technical Director.

2.1.4 Technical Directors shall take overall responsibility for technical conduct, evaluation and reporting of all analytical tasks associated with each study. Technical Directors assure that approved procedures are documented and followed, that all data are recorded and verified, and that all deviations from approved procedures are documented. Technical Directors shall report to the RAI President or a subsidiary President.

2.1.5 The Quality Assurance Department, under the direction of the Quality Assurance Officer, shall be responsible for conducting systems audits and inspections for compliance with this manual, SOP's and QA Project Plans or other project-specific protocols; maintaining the archives, maintaining historical files of all QA documents, reviewing QC charts, documenting findings and corrective action, and reporting findings to management. The Quality Assurance Officer shall report directly to the President of RAI.

2.1.6 The RAI President shall designate Technical Director(s) and replace if necessary. The RAI President shall assure that there is a Quality Assurance Department, that personnel and other resources are adequate, that personnel have been informed of their responsibilities, that deficiencies are reported to Laboratory and Technical Directors and that corrective actions are taken and documented. Any significant changes to written SOP's shall be authorized in writing by the President of RAI and its subsidiaries.

# RESOURCE ANALYSTS, INC.
# QUALITY ASSURANCE
# ORGANIZATION CHART

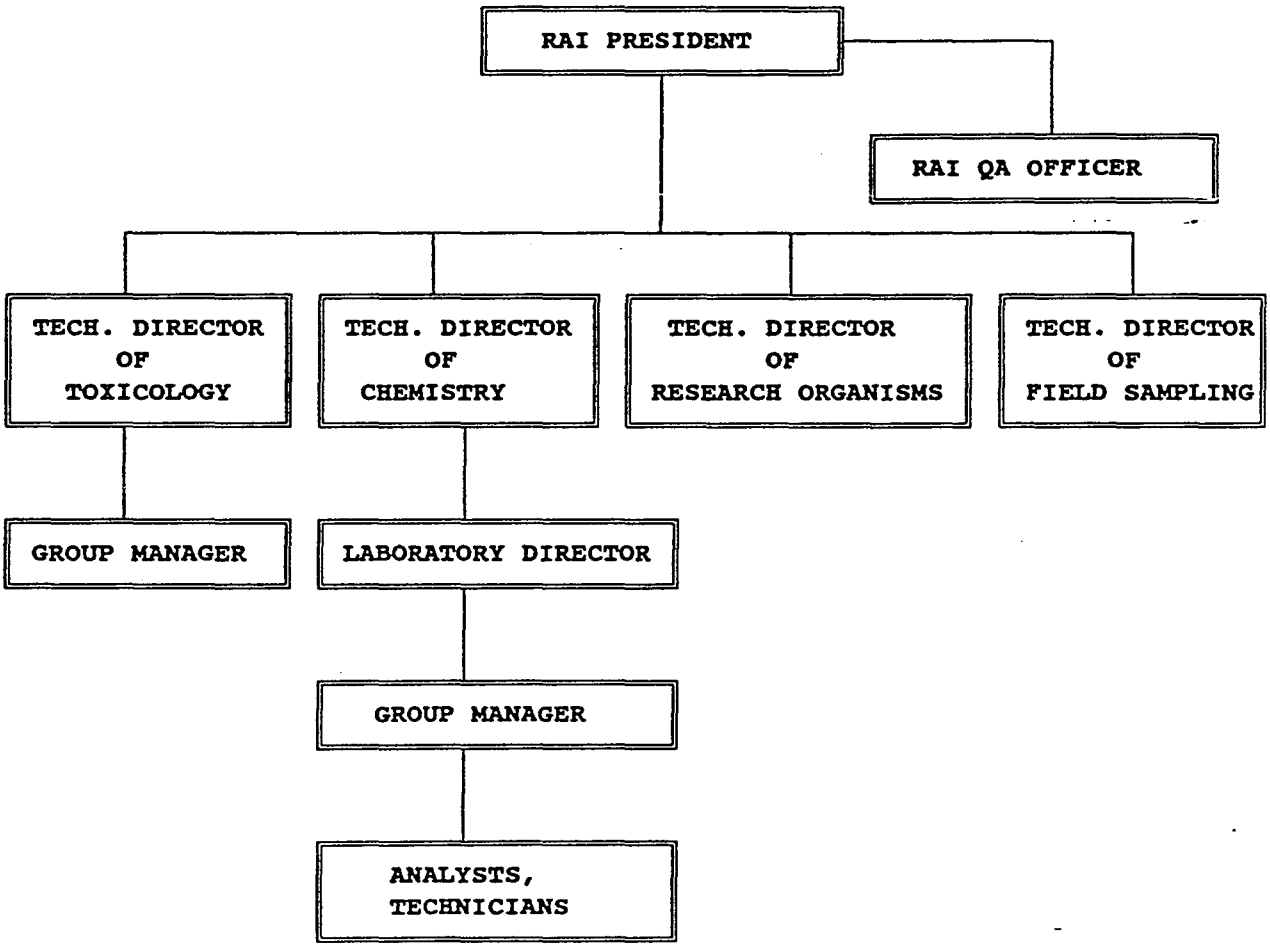

## 2.2 Outside the Laboratories

RAI analytical laboratories shall participate in the analysis of Performance Evaluation Samples managed by the U.S. Environmental Protection Agency as well as additional performance evaluation sample analysis as authorized by the RAI President.

## 2.3 Field Operations

[Reserved]

## 2.4 Test Animal Production

[Reserved]

# 3.0 Standard Practices

## 3.1 Laboratory Safety

3.1.1 Sample receiving areas and laboratories shall be equipped with suitable hoods, respirators, protective clothing and eyewear, gloves, barrier creams and other measures to prevent or minimize staff contact with hazardous substances. Safety equipment such as eyewash stations, drench showers, spill adsorbents and neutralizers, fire extinguishers, first aid materials, and breathing oxygen shall be available.

3.1.2 Unknown hazardous waste samples may be received and screened in a mobile laboratory or similar facility as an exclusion and containment measure. This facility may be staffed only with personnel judged to be thoroughly familiar with health and safety requirements. This staffing decision shall be made by the Safety Manager. Protective equipment, such as full-face respirators, shall be worn as a matter of routine. Procedures shall be described in an RAI SOP and shall be strictly followed.

3.1.3 As a matter of policy, RAI shall not accept known explosives, known dioxin-contaminated materials or unusual biohazard materials. RAI shall accept only those radioactive materials for which the isotope and emissions are clearly identified, and are in compliance with the terms and conditions of any and all applicable license(s).

3.1.4 A laboratory staff member shall be designated as Safety Manager by the Technical Director in consultation with the President. The Safety Manager prepares and maintains safety-related SOP's, conducts safety and occupational health orientation, training and review sessions as required, and maintains up to date familiarity with safety and occupational health issues pertinent to the laboratory.

3.1.5 The Safety Manager prepares and maintains educational programs as required to comply with state and federal "right to know" legislation.

3.1.6 The Safety Manager or his designee shall conduct an orientation session with each new staff member to familiarize him/her with routine and emergency safety procedures and equipment. Generally, the first one to three days shall be devoted primarily to health and safety concerns. Eye protection, a respirator, and a lab coat shall be issued to the employee. A baseline physical shall be scheduled, and a tour of the laboratory shall be conducted. During the tour, needs for eye, skin, and respiratory protection shall be discussed as well as the use of safety glasses, face

shields, goggles, partial and full-face respirators, ventilated work areas, fume hoods, gloves, barrier creams, Tyvek coveralls and overboots. The location of eye wash stations, drench showers, fire extinguishers, and first aid equipment shall be shown to the employee and their use shall be described or demonstrated. Fire and spill notification, emergency procedures, and evacuation stations shall be taught during this session. The orientation concludes with an introduction to potential chemical hazards and the Material Safety Data Sheet. MSDS shall be made available for review.

3.1.7 Health services shall be contracted from a local hospital, which provides emergency care, outpatient care and referral, training, and baseline physical examinations. Examinations shall include:

Occupational history
Health history
Physician's examination
Pulmonary function test
Liver and kidney function
Trace metal screen
EKG
Chest X-Ray

Physical examinations shall be repeated annually. Results shall be placed in personnel files and shall be available to the employee at all times.

3.1.8 Employees shall be responsible for their own safety. Laboratory Directors and Group Managers may require that certain levels of protective equipment be worn when in their judgement it is appropriate. Failure of an employee to wear required protective equipment will result in immediate disciplinary action.

3.2 Training

3.2.1 Technical Director(s) shall be responsible for staff training programs, which may be administered by the Laboratory Directors and Group Managers.

3.2.2 Training shall be conducted for each individual on each procedure that he or she is to perform.

3.2.3 No individual shall conduct any analysis, experimental procedure or other professional function without continuous direct supervision until training in that procedure has been completed and the individual's ability to produce acceptable results has been documented.

3.2.4 Written records of training activities shall be maintained by the Laboratory Directors and Group Managers.

3.2.5 Records of attendance at professional development seminars, conferences, courses and the like shall be kept by the Personnel Department.

3.3 Security and Confidentiality

3.3.1 Three tiers of security shall be maintained within all Resource Analysts, Inc. facilities with the purpose of controlling external influences on samples, analytical processes, and data. This helps assure the completeness, representativeness, accuracy, and precision of analytical results.

3.3.2 The first tier of security maintained shall be controlled access to laboratory buildings. Exterior doors to laboratory buildings shall remain either locked or continuously monitored by a Resource Analysts, Inc. staff member. Posted signs shall direct visitors to the reception office and mark all other areas as off limits to unauthorized personnel. All visitors to the facilities must sign the Visitors' Logbook maintained by the receptionist. All visitors shall be accompanied by a staff member during the duration of their stay on the premises. The staff member shall escort the visitor from the facility and report the visitor's departure to the receptionist who shall note this in the Visitor's Logbook. Prior to departure of the last staff member at the close of each day, all windows shall be locked and all doors checked and locked by the last staff member.

3.3.3 The second security level shall be within the facility and will be designated as required by the Technical Director in consultation with the President. Individual Laboratory Directors or Group Managers will close specific areas under their responsibility to entry by unauthorized persons. A list of authorized persons shall be prepared and signed by the President. "Closed Areas" shall be designated by prominent postings at all points of access.

3.3.4 The final tier of security shall be comprised of specific secure areas for sample, data and client report storage which shall be lockable within the facilities, and to which access shall be limited to specific individuals or their designees. Security of sample storage areas shall be the responsibility of the Sample Manager. Security of samples and data during analysis and data reduction shall be the responsibility of Laboratory Group Managers and Directors. Security of client report archives shall be the responsibility of the Quality Assurance Officer. These secure areas will be locked whenever these individuals or their designees are not present in the facility.

3.3.4.1 Designated laboratory sample storage locations are designed to limit access to authorized personnel only, and provisions for lock and key access shall be provided. No samples are to be removed without authorization, which consists of having a lab sheet requesting analysis on an aliquot.

3.3.4.2 Duplicate keys to any secure areas, including filing cabinets, shall be kept and regulated by the Support Services Manager or his/her designee. A logbook of all individuals who have been issued keys shall be maintained.

3.3.4.3 A master log of all individuals who have been issued keys to the facility or to any secure areas of the facility shall be maintained in the office of the President.

3.3.5 Standard business practices of confidentiality shall apply to all documents and information regarding client analyses. Specific protocols for handling confidential documents are described in RAI SOP QA-017.1. Additional protocols for internal identification of samples and data by number only shall be implemented as required under contract-specific Quality Assurance Project Plans.

3.4 Traceability of standards, instrumentation, and data

3.4.1 Since standard solutions used for analytical method calibration affect all data derived from the method, the importance of quality and traceability shall be paramount.

3.4.1.1 All materials requisitioned for calibration standard use shall be requested as such.

3.4.1.2 Purchasing staff may order only materials of certified purity from reputable suppliers. Records of reference material purchased shall be maintained by the Purchasing Department.

3.4.1.3 If assayed materials are unavailable, the material of highest purity available shall be obtained and assayed in-house before use.

3.4.1.4 Reference material containers shall be identified with the standard serial reference number and dated upon receipt.

3.4.1.5 Bound laboratory notebooks shall be used by analysts and technicians to record preparation of working standards from identified reference material. The following information shall be recorded:

date of preparation
analyst's initials
source of reference material
amounts used
final volume
serial reference number of that stock solution.

3.4.1.6 All standards containers shall be labelled with, at minimum, the standard serial reference number (small glass ampules); when possible, the name, concentration, date of preparation and expiration date of the stock standard.

3.4.1.7 All diluted working standards not consumed during an analytical session shall be labelled fully, including the serial reference number of any stock standard used in its preparation.

3.4.2 Instrumentation used shall be as prescribed in the SOP for the analytical method.

3.4.2.1 All instruments used to collect samples, generate sample results and/or reduce data shall be designated by a unique alphanumeric identifier. This instrument identifier shall appear in the analysts' notebooks, instrument logbooks and/or computer-generated hardcopy for all sample analyses.

3.4.2.2 Preventive maintenance shall be provided for all instruments and equipment as specified by the manufacturer, or as established by the Laboratory Director (or Group Manager), whichever is more frequent. Preventive maintenance shall be conducted in order to assure timely, accurate and reproducible analytical processes in a safe laboratory or field environment.

3.4.2.3 All maintenance activities shall be recorded in either the instrument run log or a separate logbook unique to the instrument.

3.4.3 All data generated in and/or reported from the laboratory shall include reference to the person(s) who performed the analysis, the date of analysis, the method used, the identification of the instrument (whenever more than one instrument is used for a method) and the acceptability of the results in the context of the QC system.

3.4.3.1 The Laboratory Control Sheet issued to laboratory departments shall be used to initiate a laboratory data file for the project.

3.4.3.2 All data pertinent to sample preparation shall be recorded by the laboratory staff in bound notebooks with numbered pages. During the sample preparation process, a preparation sheet shall be prepared for the project by the preparation specialist. It shall contain the following information:

Sample identification numbers
Date of preparation
Method reference
Analyst's initials
Final volumes of sample extracts
Relevant blank
Spike and surrogate data including the serial reference number and the instrumental analysis to be performed on each extract.

3.4.3.3 The preparation sheet shall be filed with the Laboratory Control Sheet in the Laboratory Project File.

3.4.3.4 At the time of sample analysis, the laboratory identification number, amount injected or otherwise analyzed, any dilution of the original sample and/or extract and other relevant sample data shall be entered into either an analyst's notebook or instrument logbook, or if possible into the instrument header.

3.4.3.5 All data relevant to the calculations should, where possible, be entered onto the instrument header including sample weight or volume, final volume, dilution, and spike level.

3.5 Accountability

All areas of the laboratory in which samples are received, stored, processed, or analyzed shall be kept in a condition that minimizes the risk of samples becoming lost or accidentally destroyed, contaminated, degraded, misidentified, improperly handled or otherwise compromised. The following practices shall be followed to assure that data reported represent results on the sample as submitted to the facility.

3.5.1 All employees shall be responsible for the cleanliness and order of their work areas. The Technical Director of the laboratory shall routinely tour the facilities noting major and minor infractions. These shall be brought to the attention of the respective lab supervisors who formulate and institute corrective action through their staff.

3.5.2 Each sample, defined as a unit of matrix enclosed by a single container, shall be assigned a Laboratory Control Number by the Sample Management staff member who receives the sample. Provisions to identify field replicates and additional sample volume shall be incorporated into this procedure as described in Standard Operating Procedure QA-001, Sample Receiving and Identification.

3.5.3 Cross-referencing of Laboratory Control Numbers and Client Sample ID's shall be implemented in Sample Management documents as described in Standard Operating Procedure QA-001, Sample Receiving and Identification.

3.5.4 Sample analyses shall be identified by Laboratory Control Number in analysts' notebooks or instrument logbooks, which shall consist of bound laboratory notebooks with prenumbered pages.

3.5.5 Transfers of samples in and out of storage shall be recorded in Storage Logbooks maintained by the Sample Manager.

3.5.6 Standards shall be stored separately from samples and extracted samples.

3.5.7 Test, control and reference substances for use in experimental studies mandated under the Federal Insecticide, Fungicide and Rodenticide Act (FIFRA) or the Toxic Control Substances Act (TSCA) shall be stored separately from the test system plants, animals or other components.

3.5.8 Computerized systems for data generation shall be validated prior to implementation and shall contain provisions for password access and additional security measures as required.

3.6 Sample Analysis

3.6.1 Samples shall be analyzed within holding times as specified in Table 3.1, unless a more restrictive holding time is prescribed under a contract-specific Quality Assurance Project Plan.

3.6.2 Samples shall be analyzed and experimental procedures conducted following written Standard Operating Procedures Manuals (SOP's) which have been approved in writing by management. Substantial changes to established procedures shall be authorized in writing by management via an SOP Manual revision process as described in Standard Operating Procedure QA-029, Preparation of SOP's and QA Project Plans.

3.6.3 Departures from SOP's shall be recorded with the raw data.

3.6.4 Laboratory Directors shall assure that samples shall be scheduled for analysis in compliance with the analytical request as issued by the Sample Manager in the form of a Laboratory Control Sheet(s).

3.6.5 A written Worklist System approved by the Technical Director shall be used to assign work to preparatory and instrumentation lab staff members.

## Table 3.1 Sampling and Preservation of Samples.

| Parameter | Methods | Required Volume & Containers Water (Soil) | | Preservation | Holding Times (in days) |
|---|---|---|---|---|---|
| **ORGANICS:** | | | | | |
| **Volatiles:** | | | | | |
| Drinking water GC/MS | EPA 524.1 | 3 x 40 mL | G/T | 2 drops HCl; 4°C | 7/14 |
| Wastewater GC/MS | EPA 624/8240 | 2x 40 mL | G/T | 4°C | 7/14 |
| Purgeables | EPA 601/8010 | 2x 40 mL | G/T | 4°C | 7/14 |
| Aromatics | EPA 602/8020 | 2x 40 mL | G/T | HCl pH < 2; 4°C | 7/14 |
| Acrolein, Acrylonitrile | EPA 603 | 2x 40 mL | G/T | pH 4-5; 4°C | |
| TOX (Total Organic Halides) | 9020 | 250 mL,amber | G/T | $H_2SO_4$, pH < 2; 4°C | 7/14 |
| **Semivolatiles:** | | | | | |
| Acids/Base Neutrals | EPA 625/8250/8270 | 1L (30 G) | G/T | 4°C | 7/40 |
| Pesticides/PCB's | EPA 608/8080 | 1L (30 G) | G/T | ph 5-9; 4°C | 7/40 |
| Herbicides (SDWA) | 509A/8150 | 1L (30 G) | G/T | 4°C | 7/40 |
| Petroleum Hydrocarbons-GC/FID | 3510 (Capillary GC/FID) | 1L (30 G) | G/T | 4°C | 7/40 |
| Petroleum Hydrocarbons-IR | 418.1 | 1L (30 G) | G/T | 4°C | 7/40 |
| Polynuclear Aromatics | EPA 610/8100 | 1L (30 G) | G/T | 4°C | 7/40 |
| Oil & Grease - Gravimetry | 413.1 | 1L (30 G) | G/T | $H_2SO_4$, pH < 2; 4°C | 28 |
| Oil & Grease - IR | 413.2 | 1L (30 G) | G/T | $H_2SO_4$, pH < 2; 4°C | 28 |
| NM2P | | 1L (30 G) | G/T | 4°C | |
| Phenols | 420.3 | 200 (30 G) | G/T | $H_2SO_4$, pH < 2; 4°C | 28 |
| Dioxins | EPA 8270 | 2 x 1L(100 G) | G/T | 4°C | |
| **INORGANICS** | | | | | |
| Total Metals | | 100 ml** (10 gas) | P | $HNO_3$, pH < 2; 4°C | Hg: 28 |
| Dissolved Metals | | | | | Other metals: 180 |

** 100 mLs of sample are used per digest.
Dissolved samples must be filtered before adding $HNO_3$.

Separate digests are required for Hg, As, or Se, Metals by ICP and Metals by Furnace AA.

| | |
|---|---|
| Hardness | 314A |
| Metals Digestions: | |
| Mercury | 7470 (7471) |
| Arsenic | 7060 (3050 $HNO_3$) |
| Selenium | 7740/7741 (3050 $HNO_3$) |
| Other Furance | 3020 (3050 $HNO_3$) |
| ICP/Flame | 3010 (3050 HCl) |
| Metals Analytical: | |
| Mercury | 7470 (7471) |
| Arsenic | 7060 |
| Selenium | 7470 |
| Furance | Various; 40 CFR Pt. 136. (SW 846, 3rd ed.) |
| ICP | (6010) |

The following elements can be analyzed by ICP: Ag, As, Au, B, Ba, Be, Ca, Cd, Co, Cr, Cu, Fe, K, Mg, Mo, Mn, Pb, Sb, Sr, Sn, Na, Ni, Pb, Ti, V and Zn in water, wastewater, and digested solids. As, Se, Sb, Tl and other metals normally analyzed by furnace may be determined by ICP but only with reduced sensitivity and therefore higher detection limits.

EPTox and TCLP extracts are treated as water matrix for appropriate metals.

| | | | | |
|---|---|---|---|---|
| Extraction Procedure Toxicity (EP Tox) | EPA 1310 | 100 gms | 4°C | N/A |
| TCLP | SW 846, 3rd ed. | 3 x 250 gms (3 separate containers) | | N/A |

Table 3.1 Sampling and Preservation of Samples cont.

| Parameter | Methods | Required Volume & Containers Water (Soil) | | Preservation | Holding Times (in days) |
|---|---|---|---|---|---|
| Wet Lab: | | | | | |
| Acidity | 305.1 | 100 (2 G) | P,G/T | Fill, 4°C | 14 |
| Alkalinity | 310.1 | 100 (2 G) | P,G/T | Fill, 4°C | 14 |
| Anions (Cl, Br, $So_4$, o-$PO_4$, $NO_2$, $NO_3$) | 300.0 | 50 (20 G) | P,G/T | All, 4°C | |
| | | | | o-$PO_4$, $NO_2$, $NO_3$ | 2 |
| | | | | Cl, Br, $SO_4$ | 28 |
| Asbestos | | | | | |
| BOD | 405.1 | 1000 mL | G/T | 4°C | 1 |
| BTU | D240 ASTM | 5 mLs (2 G) | P, G/T | 4°C | N/A |
| COD (Chemical Oxygen Demand) | 410.1/410.2 | 100 mL | P, G/T | $H_2SO_4$, pH < 2; 4°C | 28 |
| Coliform bacteria | | Whirlpack | | 4°C | 6 hours |
| Color | 110./3 | 100 mL | P,G/T | 4°C | 2 |
| Chlorine upon Combustion (oil) | D123-64 ASTM | (20 G) | P,G/T | 4°C | N/A |
| Conductance | SM 205 | 175 mL | P,G/T | 4°C | 28 |
| Cyanide, Total | 335.2/9010 | 1000 (25 G) | P,G/T | NaOH pH > 12; 4°C | 14 |
| Cyanide, Ammenable | 335.1 | 1000 (25 G) | P,G/T | NaOH pH > 12; 4°C | 14 |
| Flashpoint | D93-77 ASTM | 80 mL (80 G) | P,G/T | 4°C | N/A |
| Fluoride | 340.1/340.2 | 50 mL | P,G/T | 4°C | 28 |
| Formaldehyde | NIOSH | 40 mL (2 G) | P,G/T | 4°C | |
| Grain size (dry sieving) | | 30 G | P | | |
| Hexavalent Chromium | 218.4 | 200 mL (2 G) | P,G/T | 4°C | 1 |
| Ignitability | 1010 | 50 mL (2 G) | P,G/T | 4°C | |
| MBAS (Surfactants) | 425.1 | 250 mL | P,G/T | 4°C | 2 |
| Nitrogen - Ammonia | 350.2 | 500 mL (5 G) | G/T | $H_2SO_4$, pH < 2; 4°C | 28 |
| - Nitrate | 300.0 | 50 mL (20 G) | P,G/T | 4°C | 2 |
| - Nitrite | 300.0 | 50 mL (20 G) | P,G/T | 4°C | 2 |
| - TKN | 351.3 | 500 mL (5 G) | G/T | $H_2SO_4$, pH < 2; 4°C | 28 |
| - TON ($NH_4$ & TKN) | | 500 mL (5 G) | G/T | $H_2SO_4$, pH < 2; 4°C | 28 |
| Particle size (wet digestion) | Stockman & Fochman | (30 G) | G/T | 4°C | N/A |
| pH | 150.1 | 25 mL | P,G/T | 4°C | IMMEDIATE |
| Phosphorus, Total | 365.4 | 100 mL(0.5 G) (Specially Cleaned) | G/T | $H_2SO_4$, pH < 2; 4°C | 28 |
| Radiology - Radium 226/228 | | 1 gallon | P | 4°C | |
| Uranium, Alpha scan | | | | | |
| Radon | | 2 x 40 mL | G/T | 4°C | 2 |
| Reactivity - Sulfide Spot Test | SM 427.3C | 10 mL (7 G) | | 4°C | N/A |
| - Cyanide Spot Test | SM 412J | 10 mL (7 G) | | 4°C | N/A |
| - Releasable Cyanide | SW 846, Sec. 7.3 | (10 G) | | 4°C | |
| - Releasable Sulfide | SW 846, Sec. 7.3 | (10 G) | | 4°C | |

Table 3.1 Sampling and Preservation of Samples cont.

| Parameter | Methods | Required Volume & Containers Water (Soil) | | Preservation | Holding Times (in days) |
|---|---|---|---|---|---|
| Wet Lab (cont.) | | | | | |
| Silicate, Reactive | 370.1 | 100 mL (2 G) | P only | 4°C | 28 |
| Specific Gravity | SM 213 | 30 mL | | 4°C | N/A |
| Solids, Settleable | 160 | 1000 mL | | 4°C | IMMEDIATE |
| Solids, Total (TS) | 160.3 | 100 mL | | 4°C | 7 |
| Solids, Total Suspended (TSS) | 160.2 | 100 mL | | 4°C | 7 |
| Solids, Total Dissolved (TDS) | 160.1 | 100 mL | | 4°C | 2 |
| Solids, Total Volatile (TVS) | 160.4 | 100 mL | | 4°C | 7 |
| Solids, Total Suspended Volatile (TSVS) | | 100 mL | | 4°C | 7 |
| Sulfide | 376.2 | 250 mL | P | ZnAc, 4°C | 7 |
| Sulfite | 377.1 | 100 mL | P | EDTA | IMMEDIATE |
| % Sulfur | D 129-64 ASTM | (2 G) | | 4°C | |
| TIC (Total Inorganic Carbon) | 415.1 | 100 mL | G/T | 4°C | |
| TOC (Total Organic Carbon) | 415.1 | 100 mL | G/T | $H_2SO4$, pH < 2; 4°C | 28 |
| Turbidity | 180.1 | 100 mL | P, G/T | 4°C | 2 |
| Viscosity | D445 ASTM | 175 mL | P, G/T | 4°C | |
| % Solids | | (30 G) | P, G/T | 4°C | |
| Tannic Acid | | 100 mL | P,G/T | 4°C | |

## CLP

CLP documentation and protocol are available at Resource Analysts, Inc. For every 10 samples a matrix spike and matrix spike duplicate must be performed. Therefore one sample in every batch of 10 samples must have three times the volume necessary to do one test. Please contact RAI for more information on CLP requirements.

This is a partial list of tests available at Resource Analysts, Inc. Please contact us for more information.

When any sample is to be shipped by common carrier or sent through the US Mail, it must comply with the Department of Transportation Hazardous Materials Regulations (49 CFR Part 172). The person offering such material for transportation is responsible for insuring such compliance. For the preservation requirements in this table, the Office of Hazardous Materials, Materials Transportation Bureau, Department of Transportation has determined that the Hazardous Materials Regulations do not apply to the following materials:

*HCl in water solutions of 0.04% by weight or less (pH 1.96 or greater)
*$HNO_3$ in water solutions of 0.15% by weight or less (pH 1.62 or greater)
*$H_2SO_4$ in water solutions of 0.35% by weight or less (pH 1.15 or greater)
*NaOH in water solutions of 0.08% by weight or less (pH 12.3 or less)

3.6.6 The following is a partial listing of references used to establish analytical protocols.

1. "Method of Chemical Analysis of Water and Wastes", USEPA. 1979 (EPA-600/4-79-020).

2. "Method for Evaluating Solid Waste, Physical/Chemical Methods", 3rd edition, USEPA November, 1986. (SW-846).

3. "Standard Methods for the Examination of Water and Wastewater", 15th, 16th Editions, 1976-1984. APHA.

4. "Annual Book of Standards, Part 31, Water", ASTM.

5. "Official Methods of Analysis of the Association of Official Analytical Chemists", Methods Manual. 14th Edition, 1984.

6. "NIOSH Manual of Analytical Methods" U.S. Department of Health and Human Services, February 1984.

7. "Statement of Work for Organic Analysis, Multimedia, Multiconcentration", USEPA Contract Laboratory Program, 2/88.

8. "Statement of Work for Inorganic Analysis, Multi-Media Multi-concentration", USEPA Contract Laboratory Program, 7/88.

9. "Guidelines Establishing Test Procedures for the Analysis of Pollutants under the Clean Water Act." 40 CFR Part 136.

10. "Methods for Measuring the Acute Toxicity of Effluents to Freshwater and Marine Organisms." EPA-600/4-85/013. 3rd Edition.

3.7 Data Validation

3.7.1 Each department shall have written procedures for data validation which incorporate the quality assurance goals of traceability, accountability completeness, precision and accuracy.

3.7.2 No written reports shall be issued which have not undergone the data validation process.

3.7.3 For those studies conducted subject to GLP compliance, the experimental phase, the raw data and the report shall be independently audited under the direction of the Quality Assurance Officer to provide assurance that the study was conducted under GLP's and that the reported data accurately reflect the raw data.

3.8 Documentation

3.8.1 All information related to the quality assurance practices outlined in this manual shall be contained in records. This shall include, but not be limited to, standard operating procedures, study protocols, results of instrument calibrations, analysis of quality control samples, analysis of samples, sample custody and disposal, preparation of standards, corrective action, audits and inspections.

3.8.2 The Quality Assurance Office shall keep written inventories of quality-related documents which include a description of the document, the general type of analysis to which it applies, the date(s) of origin and the storage location.

3.9 Audits, Inspections, Performance Evaluations and Corrective Action

[Reserved]

# 4.0 Sample Custody

## 4.1 Sample Receipt, Handling and Chain-of-Custody

4.1.1 Samples shall be received at the laboratory by the Sample Manager or designee who removes the samples from shipping containers together with all accompanying documentation such as chain-of-custody forms, sample inventory, analysis request form, etc. The samples shall be inspected for general condition; if seals are present, whether or not they are intact; and discrepancies between package contents and sample inventory sheets or analysis sheets/analysis request forms. If discrepancies, omissions, or inappropriate samples are noted, the client shall be contacted and an effort shall be made to resolve the problems. If the client cannot be reached, the samples in question shall be assigned to cold storage (4° C) and no further action shall be taken until the problem is resolved. Samples shall be then entered into the Master Log. A project number shall be assigned to the sample group and unique individual sample numbers shall be assigned to each sample container. The Master Log serves to document the following:

Date and time of receipt
Priority status to be assigned to the sample group
Client and responsible individual (together with client project reference number when applicable).
Individual sample numbers
Client sample identification/sample description
Preservation during shipment
Preservation by RAI Sample Management
Container type and volume
Chain-of-custody requirements
Analysis requested
Date due

4.1.2 The Sample Manager prepares a set of laboratory control sheets for the sample group, which includes a project control sheet and individual laboratory group control sheets for the samples. The project sheet initiates the project file into which all documentation accompanying the sample group shall be placed. All removable tags shall be detached and kept with the project sheet. The laboratory control sheets include information on any preservation/refrigeration that occurs when the sample group arrives.

4.2 Sample Preservation and Storage

4.2.1 The Sample Manager appropriately preserves and/or refrigerates all samples and delivers the control sheets to the appropriate person responsible for the analysis. The samples shall be logged into each storage location by making an entry in the Storage Logbook which includes the project number (RAI Lab Number), the RAI Laboratory Control Number, the client's project or case number if required by the client, the date and time, and the initials of the sample management staff member who stores the samples. When samples are removed for analysis or work-up, they shall be logged out of storage by the analyst with notations of any alterations which may compromise the sample integrity.

4.2.2 All samples shall be stored so as to minimize physical or chemical alterations of the sample prior to analysis. The type of storage and preservation applied to a sample shall be determined from the analytical method reference when applicable. In the absence of these specific storage/preservation requirements, the requirements in Table 1 shall be followed.

4.2.3 Designated laboratory sample storage locations shall be designed to limit access to authorized personnel only, and provisions for lock and key access shall be provided. No samples shall be to be removed without authorization, which consists of having a lab sheet requesting analysis on an aliquot.

4.3 Sample Disposal

4.3.1 Samples shall be kept for 15 days from issue date of the final report to the client when practical, unless the client specifies alternative arrangements as part of a written contract. After the 15-day or other contractually determined post-report storage time, the samples shall be either disposed of or returned to the client.

4.3.2 At the time of reporting, a copy of the report shall be made. This copy goes to the accounting department for billing and the date reported shall be recorded in the Master Log by the Reporting Supervisor. The copy of the report shall be sent to the designated Safety and Sample Disposal Officer for authorization of disposal.

4.3.3 Documentation of disposal shall be contained in the laboratory disposal record which shall include the date and method of disposal. Laboratory disposal records shall be the responsibility of the Safety and Sample Disposal Officer who determines the method of disposal and disposes or supervises disposal of the appropriate samples.

# 5.0 Materials and Apparatus

## 5.1 Reagents, Solvents and Gases

5.1.1 All chemical reagents used for analyses shall be "Analytical Reagent Grade". Individual method references may indicate specific reagent requirements.

5.1.2 All solvents and gases used shall be chosen to assure compliance with specific SOP's.

## 5.2 Laboratory Containers

5.2.1 All volumetric glassware used in sample preparation, sample analysis and calibration of instruments and other equipment shall be Class A or better.

5.2.2 All glassware shall be cleaned following written procedures which assure that inorganic and/or organic contamination is minimized.

## 5.3 Instruments

5.3.1 Laboratory instrumentation used shall be as specified in the protocol for the analytical method.

5.3.2 Preventative maintenance shall be conducted according to a written schedule for each instrument and the activities documented in a bound instrument maintenance logbook.

5.3.3 Corrective maintenance shall be provided as required for all instruments and equipment. Factory replacement parts, trained service technicians and first quality materials shall be used whenever available. It is RAI's policy to conduct repairs at the lowest level of complexity necessary and to obtain parts directly from primary manufacturers whenever possible. This purpose of this policy is to maintain efficiency, economy and reliability of quality maintenance.

## 6.0 Calibration

6.1 Calibration verifications shall be used to confirm the ratio of instrument response to true parameter value.

6.2 All instruments, instrumental systems and other equipment used to acquire sample data shall be calibrated following the protocols described in the Standard Operating Procedures Manual for the method of interest. In general, instrumental protocols require the preparation of a calibration curve using solutions of known standards followed by measurement of instrument response to these standards. Continuing calibration verification shall be made at a frequency specified in each SOP. Protocols for other equipment such as ovens, thermometers, automatic pipettors, temperature-controlled water baths, etc. require calibration via comparison with an independently certified standard.

6.3 Standards shall be prepared as indicated in the applicable method reference. The preparation of all stock standards shall be documented in a Standards Notebook which is used to record the date of preparation, the analyst, the source of the reference material, amounts used, final volume, etc. and the serial reference number of that stock solution. All standards shall be labelled with the standard serial reference number (small glass ampules), and when possible, with the name, concentration, date of preparation and expiration date of the stock standards. All diluted working standards not consumed during an analytical session shall be labelled fully, including the serial reference number of any stock standard used in its preparation.

6.4 All calibration protocols for instruments and instrumental systems shall include a calibration verification standard, certified by the EPA if available or, at a minimum, prepared from reference materials from an alternate source which is used to verify the initial calibration. A series of calibration solutions shall be used to prepare a calibration curve over an appropriate range of concentrations. Continuing calibration verifications shall be performed during each analytical session at a frequency specified in the method SOP.

6.5 The frequency of performance of continuing calibration verifications is mandated by the analytical method in most cases; where such is not the case, a continuing calibration verification shall be performed at least once per day in which samples are analyzed and once for each batch of 20 samples (including blanks, spikes and other quality control samples) analyzed.

6.6 Calibration frequency for equipment other than instruments or instrumental systems whose calibration is specified in an analytical SOP will depend on the frequency of use and the sensitivity of the equipment. The Group Manager shall be responsible for establishing equipment calibration schedules using a combination of manufacturer's recommendations and scientific judgement. The following guidelines shall be used:

6.6.1 Analytical Balances. Every six months calibration of the entire analytical range shall be checked by a qualified service technician. Each day that the balance is used, the calibration shall be checked for gross malfunction or trends using a Class S weight.

6.6.2 pH/Electrometer. Before use each day, and once after each four hours of use, the meter shall be calibrated using pH 4 and pH 10 buffer solutions. The calibration shall be checked using a pH 7 buffer. If agreement between the three buffer solutions cannot be made to 0.05 units, the entire analytical unit shall be checked for the source of the problem.

6.6.3 Spectrophotometer. Each day that measurements are to be made, the instrument shall be checked with a minimum of one standard color cuvette.

6.6.4 Atomic Absorption Spectrometer. Initial calibration shall be made using at least three points. The calibration shall be checked every ten determinations using at least one standard. The calibration shall be checked at all three points at least once during each hour of use. If a calibration check shows a change of >10%, the calibration shall be rejected and a new curve established.

6.6.5 Gas chromatograph. Each GC system shall be initially calibrated at two points bracketing the expected sample concentrations; if the difference between response factors for the calibration points is greater than 5% a third point shall be used and a calibration curve calculated. The system shall be checked for calibration drift or variability with check standards daily or one check sample per 20 samples, whichever is more frequent.

6.6.6 Gas Chromatograph/ Mass Spectrometer. Each GC/MS system shall be initially calibrated at three points bracketing the working range of the system. Calibration shall be checked daily with a mid-range standard. If the instrument is to be used for two or more working shifts, the calibration shall be checked once each shift. Calibration checks in addition to initial and continuing (daily) calibrations may be made during sample runs by including an additional set of calibration check compounds as a "sample".

6.6.7 Pensky Martens Closed Cup Flash Point Apparatus. Once each month the thermometer shall be checked against an NBS traceable certified thermometer.

6.7 Written records of all calibrations shall be kept in the appropriate instrument logbook.

6.8 Calibrated internal standards, which check system performance with each sample, shall be used when appropriate.

# 7.0 Analysis of Quality Control Samples

7.1 Routine analytical quality control (QC) measures shall be taken to maintain reliability in analytical determinations required to control accuracy and precision. Primary analytical QC samples shall consist of laboratory control samples, laboratory control sample duplicates and blank samples.

7.1.1 Accuracy shall be monitored via spike recoveries in Laboratory Control Samples (LCS), which consist of a homogeneous matrix spiked with compounds determined by the SOP for the analytical method. Analytical methods for waters shall be accompanied by water LCS's and analytical methods for solids shall be accompanied by solid LCS's.

7.1.1.1 A Laboratory Control Sample and its duplicate shall be analyzed with each analytical batch of 20 total samples. The analytical batch of 20 includes the Laboratory Control Sample and its duplicate.

7.1.1.2 For tests that are performed in low volume, an LCS and its duplicate shall be analyzed at least monthly if the number of samples is less than 20. This monthly requirement shall NOT apply to low-volume tests for which state certification is not sought, or for tests expected to be performed solely as part of a special project, or for tests involving study specific matrices other than water, soil, sludges and oils.

7.1.1.3 Accuracy shall be calculated and expressed as percent recovery and evaluated with respect to predetermined upper and lower performance criteria as required by the analytical method reference.

7.1.1.3.1 If the percent recovery for the batch is unacceptable based on these predetermined criteria, the analytical system is deemed to be out of control and sample data from that analytical batch are unacceptable.

7.1.1.3.2 Unacceptable data shall not be reported unless reanalysis is impossible; if reported, such data shall be flagged as compromised and a narrative explanation included in the report.

7.1.1.3.3 No sample data may be accepted until corrective action has been taken and its effectiveness demonstrated via acceptable recovery results.

7.1.2 Precision shall be assessed by replicate analyses.

7.1.2.1 A Laboratory Control Sample and its duplicate shall be analyzed with each analytical batch of 20 total samples.

7.1.2.2 For tests that are performed in low volume, an LCS and its duplicate shall be analyzed at least monthly if the number of samples is less than 20. This monthly requirement shall NOT apply to low-volume tests for which state certification is not sought, or for tests expected to be performed solely as part of a special project, or for tests involving study specific matrices other than water, soil, sludges and oils.

7.1.2.3 Precision data shall be evaluated as percent difference or relative range and evaluated with respect to predetermined upper and lower performance criteria as required by the analytical method reference.

7.1.2.3.1 If the percent difference or relative range for the batch is unacceptable based on these predetermined criteria, the analytical system is deemed to be out of control and sample data from that analytical batch are unacceptable.

7.1.2.3.2 Unacceptable data shall not be reported unless reanalysis is impossible; if reported, such data shall be flagged as compromised and a narrative explanation included in the report.

7.1.2.3.3 No sample data may be accepted until corrective action has been taken and its effectiveness demonstrated via acceptable percent difference or relative range results.

7.2 Laboratory control samples may function as method specific matrix spikes and duplicates where appropriate. Additional sample-specific matrix spikes, matrix spike duplicates, and sample duplicates other than the laboratory control samples described in Section 7.1 above shall be performed whenever required by the analytical method reference, when contracted by the client for regulatory compliance monitoring and when the analyst or laboratory director determines it to be necessary for a specific sample matrix.

7.3 At a minimum, results from analyses of laboratory control samples as described in Section 7.1 shall be used to prepare control charts which document the accuracy and precision of the analytical method as performed.

7.4. For certain analyses as specified by the analytical method, a surrogate standard(s) shall be added to each sample/blank prior to preparation. Percent recovery shall be determined on the surrogate standard(s) and shall be evaluated with respect to predetermined upper and lower performance limits. Sample data shall be either rejected and the sample reanalyzed, or the reported data shall be qualified by reporting the surrogate recovery data with the sample data.

7.5 Method Blanks shall be analyzed at a ratio of one blank per analytical batch of 20. Method blanks shall be representative of the analytical process, including digestions and or extractions, where appropriate.

7.5.1 If the method blank contains contaminant compounds above the levels described in the analytical method SOP, the analytical system shall be deemed to be out of control and sample data from that analytical batch are unacceptable.

7.5.2 Unacceptable data shall not be reported unless reanalysis is impossible; if reported, such data shall be flagged as compromised and a narrative explanation included in the report.

7.5.3 No sample data from the batch may be accepted until corrective action has been taken and its effectiveness demonstrated via acceptable blank results.

8.0 Analytical Procedures

8.1 All analytical procedures shall be conducted in strict adherence with written Standard Operating Procedures Manuals which have been reviewed and approved by the Laboratory Director, the Technical Director, the RAI QA Officer and the RAI President. Documents from which SOP's are developed include the references listed in Table 8.1. Additional SOP's may be adapted from other sources or generated in-house as project needs require.

Table 8.1

1. "Method of Chemical Analysis of Water and Wastes", USEPA. 1979 (EPA-600/4-79-020).

2. "Test Methods for Evaluating Solid Waste, Physical/Chemical Methods", 3rd edition, USEPA November, 1986. (SW-846).

3. "Standard Methods for the Examination of Water and Wastewater", 15th, 16th Edition, 1976-1984. APHA.

4. "Annual Book of Standards, Part 31, Water", ASTM.

5. "Official Methods of Analysis of the Association of Official Analytical Chemists ", Methods Manual. 14th Edition, 1984.

6. "NIOSH Manual of Analytical Methods" U.S. Department of Health and Human Services, February 1984.

7. "Statement of Work for Organic Analysis, Multimedia, Multiconcentration", USEPA Contract Laboratory Program. IFB WA-85-J178, January 1985; October 1986.

8. "Statement of Work for Inorganics Analysis, Multimedia, Multiconcentration", USEPA Contract Laboratory Program. IFB WA87-K025, July 1987.

9. "Guidelines Establishing Test Procedures for the Analysis of Pollutants Under the Clean Water Act". 40 CFR Part 136.

10. "Methods for Measuring the Acute Toxicity of Effluents to Freshwater and Marine Organisms." EPA-600/4-85/013. 3rd Edition.

# 9.0 Data Reduction, Validation and Reporting

9.1 When primary analytical data, otherwise known as "raw data", is manually generated, the data shall be recorded either in bound Logbooks with prenumbered pages or on preprinted forms.

9.1.1 Entries shall be made in black ink and shall be initialled and dated by the individual who makes the entry. It is acceptable to initial and date once for an entire page.

9.1.2 Errors shall be corrected by drawing a single line through the entry; this change shall be initialled and dated by the individual who makes the change. Raw data may not be obscured in any way.

9.1.3 The use of white-out is prohibited on all raw data, including instrumental hardcopy.

9.2 The analyst who completes the analysis shall assemble all relevant raw data and results together with chromatograms, strip chart recordings, instrument settings and other information essential to data interpretation.

9.2.1 For data which are reduced by manual calculations, the calculations shall be documented in a laboratory notebook or on an analyst's worksheet.

9.2.2 The results shall be transferred to a standard laboratory reporting form which has been approved by the Group Manager and Lab Director. Reporting forms shall include at a minimum the sample identification number, the date analyzed, the result expressed per unit volume, the method reference and the analyst's initials.

9.3 Group Managers shall check calculations for at least 10% of the analyses and document this data validation step in the analytical notebook. If a problem is discovered, the Group Manager shall check all calculations retroactively to the last date of the 10% check.

9.4 For data which are reduced via computer, calculations shall be checked by the analyst (or designee) assigned to this task at a frequency designed to assure that the data manipulations are valid. This data validation step shall be documented by the analysts' initials on the hardcopy of the raw data. The results shall either be manually transferred to a standard reporting form or reported via computer generation of forms.

9.5 The Group Manager shall submit the validated data package, including the reporting forms and the appropriate laboratory control sheets, to the Laboratory Director who shall review the package for QC requirements and completeness. If any errors are discovered, the entire package shall be returned to the Group Manager for full reworking.

9.6 When accepted, the Laboratory Director shall assemble the data with other data from the sample set, draft any narrative comments if required by the Quality Assurance Project Plan, and forward the report and the data package to the Technical Director.

9.7 The Technical Director shall examine the report for method appropriateness, detection limits and whether or not QC criteria were satisfied. Any deviations from the referenced methods shall be checked for documentation and validity, and QC corrective actions shall be reviewed for successful resolution.

9.8 Upon acceptance, the Technical Director shall release the report to the Reporting Department for typing and assembly. The Technical Director shall sign the completed reports prior to their release.

9.9 Each department shall have written procedures for data reduction, validation and reporting.

# 10.0 Records Management

[Reserved]

# 11.0 Corrective Action

11.1 Corrective action involves several activities designed to resolve a problem identified through an internal audit, an audit by a regulatory agency, a performance evaluation sample or routine analysis of QC samples.

11.1.1 Investigation of problems revealed by laboratory analysis of routine QC samples shall be the responsibility of the Laboratory Director and Group Manager(s). Managers may delegate investigative tasks to Senior Technicians and Analysts.

11.1.2 Group Managers, in conjunction with the Laboratory Director, shall be responsible for determining the cause of the problem and corrective action(s) needed for resolution.

11.1.3 Corrective action shall be implemented by the Laboratory Director and Group Manager(s), who shall evaluate whether the action taken has resolved the problem. The Technical Director shall be advised of situations for which corrective action fails to resolve the problem in a timely manner.

11.1.4 The Group Managers and Laboratory Directors shall confirm that the corrective action taken has eliminated the problem.

11.1.5 The QA Officer shall assure that corrective action is taken and that it has resolved the problem.

11.2 The steps in the corrective action process described above, namely:

identification of the problem
investigation
determination of cause and corrective action
verification that action taken has eliminated the problem
follow - up by the QA Officer

shall be documented by the individual who performed the task.

11.3 Documentation of the problem and outcome of the corrective action may be recorded on a form such as Figure 11.1 or in a memo to the Technical Director and the QA Officer.

11.4 Specific corrective action practices regarding routine analysis of QC samples shall be described in the Standard Operating Procedures Manual for the analytical method.

11.5 Corrective action shall be taken and documented in the following situations:

11.5.1 Analysis of routine QC samples related to an EPA method in which the acceptance limits specified are exceeded.

11.5.2 Results of a performance evaluation study are outside the study's acceptance criteria.

11.5.3 Audit Reports by a regulatory or certifying agency reveal deficiencies noted during either a site inspection or a data audit.

11.5.4 An internal audit by the Technical Director, a Lab Director, a Group Manager or a QA Officer which reveals an irregularity, deficiency or other non-compliance with this manual or a Standard Operating Procedures Manual.

Figure 11.1 Quality Assurance Irregularity Report

RESOURCE ANALYSTS, INCORPORATED Doc. No. 02-_____

Quality Assurance Irregularity Report

Part I (To be completed by QA Auditor)

Date:_____

Sample ID Number(s) Involved:_____
_____

Description of QA irregularity:_____
_____
_____

Signed_____
Auditor

Signed_____
QA Officer

Part II (To be Completed by Department Supervisor)

Steps taken to investigate irregularity:_____
_____
_____

Explanation of probable cause of irregularity:_____
_____
_____

Steps taken to prevent future occurrence:_____
_____
_____

Name of employee who performed work:_____

Signed_____

Date_____

## 12.0 Internal QA/QC Audits and Reports to Management

12.1 The Quality Assurance Officer assures the President that all quality control measures are in place. The QA Officer and President shall meet on a regular basis to review lab workload, personnel performance and training, instrument requirements and maintenance, analytical methods, non-routine analyses, safety and QA/QC procedural involvement. Any items pertinent to QC shall be assigned to individuals for resolution. The QA Officer shall perform s a monthly lab audit inspecting:

Sample storage
Chain of custody documentation
QC precision activities
QC accuracy activities
Instrument maintenance
Documentation

12.2 Any non-compliances shall be listed by the QA Officer and discussed with the Laboratory Director. Oversights shall be discussed with the analyst and his/her Laboratory Director while the Laboratory Director decides how to correct systematic errors or misunderstandings. Modifications too cumbersome to be handled by the Laboratory Director alone are handled by the Laboratory Director, QA Officer, and President.

12.3 Quarterly, or more frequently as required, the QA Officer reviews program and audit performance at his/her discretion. Audit reports and program reviews shall be provided to the President.

13.0 Directory of RAI Standard Operating Procedures.

Table 13.1 Inventory of RAI Standard Operating Procedures

| TITLE | NUMBER |
|---|---|
| Administrative and General, Analytical Chemistry | 001-029 |
| Sample Receiving and Identification | QA-001 |
| Sample Storage | QA-002 |
| Bottle Orders | QA-003 |
| Sample Disposal | QA-004 |
| Sample Preservation | QA-005 |
| Sample Preservation: | |
| Sulfur & Chlorine Spot Tests for Cyanide Samples | QA-005.1 |
| Sample Custodian Duties | QA-006 |
| Tracking Sample Analysis: | |
| Metals | QA-007 |
| Wet Lab | QA-008 |
| Organics: | |
| Volatiles and 601/602 | QA-009 |
| ABN's--instrumental | QA-010 |
| --extractables | QA-010.1 |
| Pesticides and PCB's--instrumental | QA-011 |
| --extractables | QA-011.1 |
| Other,including onols, PHC | QA-012 |
| General Organics | QA-013 |
| Instrument Records, Logbooks, Notebooks, Benchsheets | QA-014 |
| Data Assembly | QA-015 |
| Data Auditting | QA-016 |
| Vol. Validation-CLP | QA-016.1 |
| Semi-Vol. Validation-CLP | QA-016.2 |
| P/P - CLP | QA-016.3 |
| Case File Assembly-CLP | QA-017 |
| Handling Confidential Data | QA-017.1 |
| Document Inventory Procedures-CLP | QA-017.2 |
| Document Data Shipping | QA-018 |
| Reagents and Solutions | QA-019 |
| Prep. of Standards, Volatiles | QA-019.1 |
| Prep. of Standards, ABN's | QA-019.2 |
| Glassware Cleaning/Inorganics | QA-020 |
| Metals Glassware Prep. | QA-020.1 |
| Glassware Prep./Organics | QA-021 |
| Column Cleaning | QA-021.1 |
| Cleaning purge tubes | QA-021.2 |
| Quality Assurance Archives | QA-022 |
| Dishwashing Machine | QA-023 |
| Tracking Results Assembly and Reporting | QA-024 |
| Billing Form Preparation | QA-025 |
| Report Preparation | QA-026 |
| Purchasing | QA-027 |
| DI Water System | QA-028 |
| Preparation of S.O.P's and QA Project Plans | QA-029 |

Table 13.1 (cont.) Inventory of RAI Standard Operating Procedures

| TITLE | NUMBER |
|---|---|
| Volatile Techs. QA-030 to 039 | |
| Method 624 (GC/MS) | QA-030 |
| Method 601/602 (GC) | QA-031 |
| Purgeable Halocarbons/Hall ECD | QA-031.1 |
| Purgeable Aromatics/PID | QA-031.2 |
| ASTM (GC) | QA-032 |
| % Solvents in liquids | QA-033 |
| CLP low-level soil | QA-034.1 |
| CLP medium-level soil | QA-034.2 |
| CLP water | QA-034.3 |
| EPA 524.1 | QA-035.1 |
| EPA 501.3 | QA-035.2 |
| EPA 524; Low-level | QA-035.3 |
| EPA 501.1; TTHM's | QA-035.4 |
| EPA 501.2; TTHM's | QA-035.5 |
| Solids Prep for 624/8240(pegging) and 601/602(8020) | QA-036 |
| Volatiles Screening by GC/FID | QA-037 |
| EPA 8240 | QA-038 |
| Unassigned: | QA-039 |
| ABN Techs | QA-040 to 049 |
| Extractions: | |
| Low Liquids | QA-040.1 |
| Low Solids | QA-040.2 |
| N-methyl-2-pyrrolidone | QA-040.3 |
| Low Soil; CLP | QA-041 |
| Med. Soil; CLP | QA-042 |
| Water; CLP | QA-043 |
| Analytical | |
| CLP | QA-044 |
| EPA 625 | QA-045 |
| Chlorinated Hydrocarbons; 8120 | QA-046 |
| N-Aromatics & C. Ketones; 8090 | QA-047 |
| Phthalate Esters; 8060 | QA-048 |
| Unasssigned: | QA-049 |
| Pesticides and PCB Techs: | QA-050 to 059 |
| Extractions: | |
| P/P Low level waters | QA-050.1 |
| P/P Low Level Solids | QA-050.2 |
| Herbicides-liquids | QA-050.3 |
| Herbicides-solids | QA-050.4 |
| P/P Liquids (oils) | QA-050.5 |
| PCB screens | QA-050.6 |
| Aluminum Clean-up | QA-050.7 |

Table 13.1 (cont.) Inventory of RAI Standard Operating Procedures

| TITLE | NUMBER |
|---|---|
| Extractions: | |
| Sulfur Clean-up | QA-050.8 |
| Acid Clean-up | QA-050.9 |
| Florisil Clean-up | QA-050.10 |
| P/P Solid Screens-CLP | QA-050.11 |
| PCB Swabs/Sonication | QA-050.12 |
| PCB Screen, Rapid | QA-050.13 |
| P/P Med. Level Solids, 3550 Mod. | QA-050.14 |
| Low Soil; CLP | QA-051 |
| Med. Soil; CLP | QA-052 |
| Water; CLP | QA-053 |
| Analytical: | |
| CLP QA-054 | |
| EPA 608/8080 | QA-055 |
| EPA 608/8080 (modified) tissues | QA-055.1 |
| SDWA Pesticides | |
| SDWA Herbicides (water) APHA 509 | |
| SDWA Herbicides (soil) EPA 8150 | |
| SDWA others | |
| Unassigned: | QA-056,057 |
| Organophosphorus Pesticides; EPA 8140 | QA-058 |
| Unassigned: | QA-059 |
| Organics Special Projects | QA-060 to 069 |
| Non-target Compounds by 624/625 | QA-060 |
| Unassigned: | QA-061-069 |
| Petroleum Hydrocarbons: (PHC) | |
| Analytical by GC/FID | QA-070 |
| Extractions for GC/FID: | |
| Waters | QA-070.1 |
| Solids | QA-070.2 |
| Polynuclear Aromatics EPA 610/8100 | QA-071 |
| Bioassay Preparations: | |
| P/P, Aromatics, Aliphatics | QA-072.1 |
| % Lipids | QA-072.2 |
| P/P in milk | QA-072.3 |
| Marine Tissue Extractions for PHC, P/P | QA-072.4 |
| P/P in Fish Tissue | QA-072.5 |

Table 13.1 (cont.) Inventory of RAI Standard Operating Procedures

| TITLE | NUMBER |
|---|---|
| Oil and Grease/PHC by Gravimetry | |
| Analytical | QA-073 |
| Extractions | |
| Liquids | QA-073.1 |
| Solids | QA-073.2 |
| Phenols | |
| Analytical | QA-074 |
| Extractions | |
| Liquids | QA-074.1 |
| Solids | QA-074.2 |
| Unassigned: | QA-075-079 |
| Ethylene Thiourea (ETU) GC with FPD | QA-080 |
| Maneb by GC/FPD Analysis of Carbon Disulfide | QA-081 |
| Benchmark (RE-40885) in water by GC | QA-082 |
| Zinc Phosphide | QA-083 |

Table 13.1 (cont.) Inventory of RAI Standard Operating Procedures

| TITLE | | NUMBER |
|---|---|---|
| Inorganics | | QA-100 to 399 |
| (Wet Lab): | | 100-199 |
| | EPA Method | |
| Acidity | 305.1 | QA-100 |
| Alkalinity | 310.1 | QA-101 |
| Anions by IC (SO4, Cl, Br, NO2, NO3, PO4) | 429 | QA-102.1 |
| Anions in Solids | | QA-102.2 |
| Iodide | | QA-102.3 |
| Boron | 212.3 | QA-103 |
| Carbon - total inorganic | 415.1 | QA-104.1 |
| - total organic | 415.2 | QA-104.2 |
| Chemical oxygen demand | 410.1/410.2 | QA-105.1 |
| | SM508A | QA-105.2 |
| | SM508C | QA-105.3 |
| Chloride | 325.3 | QA-106 |
| Chlorine Demand | SM409A | QA-107 |
| Color | 110.3 | QA-108.1 |
| | SM204A | QA-108.2 |
| Chromium - hexavalent | 218.4 | QA-109.1 |
| | SM312B | QA-109.2 |
| Cyanide - total | 335.2/9010 | QA-110.1 |
| - total & ammenable | 335.1 | QA-110.2 |
| - weak acid dissociable | | QA-110.3 |
| - after Chlorination | | QA-110.4 |
| - Cyanide Spot Test | | QA-110.5 |
| Flashpoint | ASTM | QA-111 |
| Fluoride | 340.1/340.2 | QA-112 |
| Formaldehyde | NIOSH | QA-113 |
| Halogens/Sulfur in oil prep | | QA-114 |
| Hardness | 130.2 | QA-115 |
| Heat of Combustion | | QA-116 |
| Ignitability | | QA-117 |
| Nitrogen - ammonia | 350.2 | QA-118.1 |
| - nitrate | 352.1 | QA-118.2 |
| - nitrite | 354.1 | QA-118.3 |
| - Kjeldhal | 351.3 | QA-118.4 |
| - total organic | 350.2/351.3 | QA-118.5 |
| pH | 150.1 | QA-119 |
| Particle Size | | QA-120 |
| Phosphorus - total | 365.4 | QA-121.1 |
| - ortho | 365.2 | QA-121.2 |
| Reactivity/RCRA | | QA-122 |
| Silica by Colorimetry | | QA-123 |
| Silicate - reactive | 370.1 | QA-124 |

Table 13.1 (cont.) Inventory of RAI Standard Operating Procedures

| TITLE | | NUMBER |
|---|---|---|
| Inorganics (continued) | | |
| Solids | | QA-125 |
| - total | 160.3 | |
| - suspended | 160.2 | |
| - dissolved | 160.1 | |
| - volatile | 160.4 | |
| - fixed | | |
| - settleable | | |
| Specific conductance | 120.1<br>SM205 | QA-126 |
| Sulfate | 375.4 | QA-127 |
| Sulfide | 376.2 | QA-128 |
| Sulfite | 377.1 | QA-129 |
| Surfactants - MBAS | 425.1 | QA-130 |
| Turbidity | 180.1 | QA-131 |
| BOD | 405.1 | QA-132 |
| Unassigned: | | QA133-199 |

Table 13.1 (cont.) Inventory of RAI Standard Operating Procedures

| TITLE | | NUMBER |
|---|---|---|
| Metals Instrumentation | | 200-299 |
| Analyte | EPA Method | |
| Antimony | 204.1/7040 | QA-200 |
| Antimony(furnace) | * 204.2/7041 | QA-201 |
| Arsenic(furnace) | * 206.2/7060 | QA-202 |
| Beryllium | * 210.1/7090 | QA-203 |
| Beryllium(furnace) | 210.2/7091 | QA-204 |
| Cadmium | * 213.1/7130 | QA-205 |
| Cadmium(furnace) | 213.2/7131 | QA-206 |
| Chromium | * 218.1/7190 | QA-207 |
| Copper | * 220.1/7210 | QA-208 |
| Lead | * 239.1/7420 | QA-209 |
| Lead(furnace) | 239.2/7421 | QA-210 |
| Mercury(cold vapor) | * 245.1/7470 | QA-211 |
| Nickel | * 249.1/7520 | QA-212 |
| Selenium(furnace) | * 270.2/7740 | QA-213 |
| Silver | * 272.1/7760 | QA-214 |
| Silver(furnace) | 272.2/7761 | QA-215 |
| Thallium(furnace) | * 279.2/7841 | QA-216 |
| Zinc | * 289.1/7950 | QA-217 |
| Barium | 7080 | QA-218 |
| As/Se (furnace) | | QA-219 |
| Sb/Th (furnace) | | QA-220 |
| Unassigned: | | QA-221-229 |
| Trace Metals by ICP | | QA-230 |
| Barium | 200.7 | |
| Chromium | 200.7 | |
| Copper | 200.7 | |
| Sodium | 200.7 | |
| Beryllium | 200.7 | |
| Cadmium | 200.7 | |
| Cobalt | 200.7 | |
| Iron | 200.7 | |
| Lead | 200.7 | |
| Manganese | 200.7 | |
| Vanadium | 200.7 | |
| Zinc | 200.7 | |
| Nickel | 200.7 | |
| Molybdenum | 200.7 | |
| Calcium | 200.7 | |
| Magnesium | 200.7 | |
| Priority Pollutant Metals | as asterisked above | |
| Unassigned: | | QA-231-234 |

Table 13.1 (cont.) Inventory of RAI Standard Operating Procedures

| Analyte | EPA Method | Number |
|---|---|---|
| Tungsten (AA) | | QA-235 |
| Titanium (AA) | 283.1 | QA-236 |
| Tin (AA) | 282.1 | QA-237 |
| Platinum (AA) | | QA-238 |
| Manganese (AA) | 243.1 | QA-239 |
| Magnesium (AA) | 242.1 | QA-240 |
| Iron (AA) | 236.1 | QA-241 |
| Calcium (AA) | 213.1 | QA-242 |
| Aluminum (AA) | 202.1 | QA-243 |
| Potassium (AE) | SM 322B | QA-244 |
| Sodium (AE) | SM 325B | QA-245 |
| Lithium (AE) | SM 317B | QA-246 |
| Vanadium (AA) | 286.1 | QA-247 |
| Unassigned: | | QA-248-299 |
| Metals Digests: | | QA-300-350 |
| Digest Lab Books | | |
| Waters, total or diss., FLAA or ICP | EPA 3005 | QA-300 |
| Waters, total, FLAA or ICP | EPA 3010 | QA-301 |
| Waters, total, GFAA | EPA 3020 | QA-302 |
| Oils | EPA 3030 | QA-303 |
| Unassigned: | | QA-304 |
| Soilds | EPA 3050 | QA-305 |
| Arsenic, acid digest of liquids, GFAA | EPA 7060 | QA-306 |
| Silver, acid digest of liquids, AA | EPA 7760 | QA-307 |
| Mercury, acid digest of liquids,cold vapor | EPA 7470 | QA-308 |
| Mercury, acid digest of solids, cold vapor | EPA 7471 | QA-309 |
| EPTOX | EPA 1310 | QA-310 |
| TCLP | | QA-311 |
| Reagent List for Metals Digestion, EPTOX,TCLP | | QA-312 |
| Spiking Solutions | | QA-313 |
| Post-filtering Digests for ? | | QA-314 |
| Percent Solids | | QA-315 |
| Hydrofluoric Digest, soils for cations | | QA-316 |
| Hex Chrome/Seawater | | QA-317 |
| Unassigned: | | QA-318-320 |
| Waters, Furnace AA, CLP | | QA-321 |
| Waters, Flame AA or ICP, CLP | | QA-322 |
| Soils, Furnace AA, CLP | | QA-323 |
| Soils, Flame AA or ICP, CLP | | QA-324 |
| Mercury, Waters, CLP | | QA-325 |
| Mercury, Soils, CLP | | QA-326 |
| Mercury, tissues | EPA 600;245.5 RAI Digest #3 | QA-340 |
| Metals, tissues | EPA 3050 RAI Digest #4 | QA-341 |
| Lead in Milk | | QA-342 |
| Unassigned: | | QA-327-339 |
| | | QA-343-350 |

Table 13.1 (cont.) Inventory of RAI Standard Operating Procedures

| | |
|---|---|
| Other Inorganics | 351-399 |

Table 13.1 (cont.) Inventory of RAI Standard Operating Procedures

| | |
|---|---|
| Safety | QA-400 to 499 |
| Waste Disposal | QA-500-599 |
| Solvent Water Disposal | QA-501 |
| Training | QA-600-699 |
| Instrument Maintenance | QA-700-899 |
| Aquatic Toxicology | QA-1000-1999 |
| General and Administrative, Aquatic Toxicology | QA-1001-1099 |

*currently subcontracted parameter

| | |
|---|---|
| TOX* | 9020 |

# 14.0 Location List of Instruments and Manuals

## 14.1 RAI GC/MS Instrumentation Laboratory

Extrel ELQ 400 GC/MS/DS including ELQ 1000 data system, Varian 3400 GC with autosampler, EI/CI capability, solids probe and 9-track tape.

(2) Hewlett-Packard 5970 GC/MS/DS including HP1000E RTE data system, Aquarius software, HP7970B 9-track tape drive, with Tekmar LSC-2 purge and trap system and ALS.

Hewlett-Packard 5993B GC/MS/DS System, including HP 1000E data processing system, packed and capillary column capable, Tekmar LSC-2 purge and trap system and ALS.

Hewlett-Packard 5993B GC/MS/DS System, as above, including 9-track tape drive, Tekmar LSC-2 purge and trap system and ALS.

Hewlett-Packard 5890 GC with OI 4420 electrolytic conductivity detector, HNU Systems photoionization detector.

Hewlett-Packard 5880A GC with N/P, FID and ECD detectors and 99-place autosampler.

Hewlett-Packard 5890 GC with capillary column and ECD detector, and 7673 100-place autosampler.

Hewlett-Packard 5890A GC with dual FID and TCD detectors and dual LSC-2 purge and trap systems with ALS.

Hewlett-Packard 5840A GC with split/splitless capillary column capability, FID and ECD detectors, and 99-place autosampler.

Tracor 540 GC with Hall electrolytic conductivity detector.

Tekmar 4000/4200 Dynamic Headspace Concentrator with automatic heated sampler module.

Hewlett-Packard 3350 Laboratory Automation System

Hewlett-Packard 5890 GC with OI 4420 electrolytic conductivity detector

Hewlett-Packard 5890 GC with dual FID detectors, OI 4460 automated purge and trap system and Tekmar LSC-2 and ALS purge and trap system.

Waters GPC System for A/B/N and pesticides extract processing

Waters LC System with UV Spectrophotometer, chromatography pumps, pump controller, RI, fluorescence and electrochemical detectors and autosampler.

Perkin Elmer Series 400 liquid chromatograph system with LDC variable wavelength UV detector.

14.2 RAI Inorganics Laboratory

Perkin Elmer 883 infrared spectrophotometer.

HF1100 turbidimeter.

OI total organic carbon analyzer.

Astro 2001 Total Organic Carbon analyzer

Dionex 2000i Ion Chromatograph system with automated sampler.

Beckman PH43 pH Meter

Bausch & Lomb Spectronic 601 UV/Vis spectrophotometer

Parr bomb calorimeter

YSI Model 32 conductance meter

Labconco 4 place Kjeldahl digestion apparatus

Labconco rapid Still II TKN/ammonia distillation apparatus

Herzog Pensky-Marten semiautomatic flashpoint tester

Precision Scientific Pensky-Marten flashpoint tester

14.3 RAI Metals Instrumentation Laboratory

Perkin Elmer 5000 AA with MHS 20 mercury/hydride system, HGA 500 graphite furnace atomizer and AS 40 furnace autosampler.

Instrumentation Labs Video 22 AA system with automated flame and furnace systems.

Leeman Laboratories Plasma-Spec ICP with autosampler

Varian Spectra AA 20 AA with VGA mercury/hydride apparatus and PSC-56 autosampler

14.4 RAI Metals Prep Laboratory

(1) Rotary EP Toxicity extractor; 10 place, custom built

(2) Rotary EP Toxicity extractor; 10-place, Lars Lande

(4) Millipore Zero Headspace TCLP Extraction vessels

(1) Millipore rotary extractor for Zero Headspace extraction vessels

(8) Millipore high pressure hazardous waste filtration devices for EP Toxicity and TCLP

14.5 ESI Instrumentation Laboratory

Perkin-Elmer LC1-100 Laboratory Computing Integrator

Perkin-Elmer Series 400 Liquid Chromatograph

SpectroMoniter Z Detector (UV) by LDC

American Scientific Products S/P 182 Analytical Balance

Fisher Series 700, Model 7302D Top-loader Balance

Microscopes:

Bristolscope (Bristoline) Bristol HWF10)X, No. 753413
Olympus (Olympus Optical Co., Ltd.) No. 241491
Bausch & Lomb 10xWF Stereo; Stereozoom 7

Markson Model 1096 Specific Conductivity Meter

(2) Beckman O21 pH meters

(3) Beckman Combination Electrode #39831 pH probes

Orion Research, Inc. Ammonia electrode Model 95-12

Atago hand refractometer Model S-10

Yellow Springs Instrument Co., Inc. dissolved oxygen meter, Model 51B

Yellow Springs Instrument Co., Inc. dissolved oxygen meter, Model 57

# 15.0 Subcontracting

[Reserved]

# Appendix D

## RAI Analytical Methodologies for Total Phenols, Total Organic Carbon, Total Petroleum Hydrocarbons, and Grain Size

Resource Analysts, Incorporated

Standard Operating Procedure

| | | |
|---|---|---|
| Procedure By/Date JEM / 10-23-86 | Title: Particle Size | Page 1 of 5 |
| Approved By/Date RX / 3/24/87 | | Procedure No. QA #120 |
| Version 2 | | Reference (Note 1) |
| Supersedes All | | |

Comments: Particle Size Analysis is not a rigidly defined term and may refer to any of several categories. It is the responsibility of the analyst to consult with the Laboratory Director to determine the exact nature of each analytical request.

## Introduction

As a general rule, the dry weight and % moisture are determined, the sample is digested with peroxide to remove any organic matter and the digested sample is used to determine the percentages of Sand, Silt and Clay in the sample (on a dry weight basis). The determination of Silt and Clay is based on the Andreason Pipet method which takes advantage of the different settling rates of particles based on size. The Sand fraction may also be broken down into further subdivisions of particle size.

## Definitions

Sand: All material which, following digestion, is retained by a US No. 230(63um) sieve.

Silt: All material remaining after digestion with particles smaller than 63um but larger than 4um.

Clay: All material remaining after digestion with particles smaller than 4um.

## Equipment/Reagents

Standard Sieves: US No. 10(2mm);US No. 18(1mm);US No. 35 (500um); US No. 60(250um);US No. 120(125um); US No. 230(63um).( Note 2)

Tyler RoTap rotary sieve shaker.

Calgon Solution: Dissolve 2.55g Calgon(TM) in 1L ASTM Type II Water.( Note 3)

Hydrogen Peroxide (30%)

## Procedure

1. Dry Weight/% Moisture: A representative sample of approximately 25g, weighed to the nearest 20mg, is placed in an appropriate vessel (dried and tared) and dried overnight at 103°C. The sample is then allowed to cool to room temperature in a dessicator and the weighing vessel and sample are then weighed. The sample is then reheated for at least two hours, allowed to cool and reweighed. This procedure is repeated until two successive weighings agree to within 20mg.

2. Digestion: Approximately 2g of the dried sample is placed in a 50 mL beaker along with one mL of Calgon solution and mixed well. One mL Hydrogen Peroxide is added and the sample is gently warmed on a

hot plate at the lowest setting. Observe the sample carefully for foaming characteristics both before and after warming. If the foaming is moderate, transfer approximately 20.00g of the dried sample to a 250mL beaker. If the foaming is severe, transfer approximately 5.00g of dried sample to each of four 250mL beakers. Add sufficient Calgon solution to the beaker(s) to thoroughly wet and disperse the sample(s). Add 1-2 mL of Hydrogen Peroxide per 5 grams of sample to the beaker(s) and swirl gently. After any bubbling has subsided, gently warm the sample until there is no bubbling when the beaker(s) is/are swirled. Allow the beaker(s) to cool and repeat the above sequence until there is little or no bubbling upon the further addition of peroxide. If necessary, compare the behavior of an equivalent amount of peroxide added to a clean, empty beaker to aid in this decision.

3. Separation of Sand from Silt/Clay: The digested sample is then rinsed with 800mL Calgon solution through a 63um sieve into a collecting pan, combining the individual digestates if it was necessary to split the sample for the digestion. Proceed with the appropriate step depending on the analytical request. If the Silt and/or Clay content of the sample is/are to be determined, rinse the pan contents into a 1L graduated cylinder using the Calgon solution. Dilute to the mark with Calgon solution. Agitate the sample well with a plunger and allow it to stand overnight. If the Silt/Clay content is not to be determined, discard the pan contents. If the Sand content is to be determined, rinse the contents of the sieve with deionized water, discarding the rinsate. Transfer the contents of the sieve, rinsing with deionized water if necessary, into an appropriate vessel (dried and tared). Dry and weigh the sand fraction as described above.

4. Treatment of Sand Fraction: If the subdivision of the sand fraction is to be carried out, proceed as follows. Arrange the sieve assembly in ascending order (pan, 63um, 125um, 250um, 500um, 1mm and 2mm). Transfer the dried contents of the 63um sieve to the top pan of the stack. Reweigh the tared vessel to determine the actual amount transferred. Place the cover on the assembly and place the stack in the tyler RoTap apparatus for 10 minutes. Transfer the contents of each sieve and the pan contents (if any) to appropriate tared containers and determine the weight of each fraction.

5. Treatment of Silt/Clay Fraction: Having been allowed to stand overnight, the contents of the 1L graduated cylinder are reagitated as before. A 25mL aliquot of this solution is withdrawn with a volumetric pipet, the tip of which is held stationary at a point 20cm below the surface of the liquid at the beginning of the withdrawal (i.e. do not lower the pipet as the liquid level drops.) The contents of the pipet are transferred to an appropriate vessel (dried and tared) for drying and weighing as previously described. This subsample will be used to determine the combined Silt/Clay content of the sample. Reagitate the

sample. Precisely 123 minutes later, withdraw another 25mL aliquot this time holding the tip of the pipet 10cm below the liquid level. This portion is also transferred to a vessel (dried and tared) for drying and weighing as previously described. Repeat all reheating and reweighing cycles for the 25 mL aliquots until two successive readings agree to within 5mg. According to Stoke's Law, all particles larger than 4um will have settled at least 10cm in 123 minutes. This subsample can thus be used to approximate the clay content of the sample. Three 25 mL aliquots of the Calgon solution are also dried at 103°C and weighed.

6. Calculations:

Note: In all of the following calculations it is to be understood that "weight" refers to the net weight of the material described, i.e. the weight of the sample plus the container minus the tare weight of the container.

a. Percent Moisture

$$\% \text{ Moisture} = 100 - \frac{(\text{dry weight of initial sample} \times 100)}{(\text{weight as received of initial sample})}$$

b. Percent Sand

$$\% \text{ Sand} = \frac{(\text{Digested \& dried weight of sample})}{(\text{Undigested dry weight of sample})} \times 100$$

c. Percent Silt and Clay

Determine the average weight of Calgon in the three aliquots of Calgon solution. This is referred to in this section as "weight Calgon"

All weights of Silt or Clay in this section refer to the weight of the dried residue of the 25mL aliquots in question and are expressed in grams.

Any material which may be retrieved from the pan during dry sieving (when done) will be assumed to be mostly silt and included in the silt fraction/

$$\text{Clay content} = \frac{(\text{weight of 2nd pipetting} - \text{weight Calgon})}{0.025\text{L}} \times 1\text{L}$$

$$\% \text{ Clay} = \frac{\text{Clay content}}{\text{Amount digested (dry)}} \times 100$$

Silt & Clay content =

$$\frac{(\text{weight 1st pipetting} - \text{weight calgon}) \times 1\ L}{0.025L}$$

$$\% \text{ Silt} = \frac{(\text{Silt \& Clay content} - \text{Clay content})}{\text{Amount digested (dry)}} \times 100$$

d. Percent Digestible Material

% Digestible Material =

$$\frac{(\text{Amount digested (dry)} - \text{Digested \& dried weight})}{\text{Amount digested (dry)}} \times 100$$

e. Sand Subfractions (as percent of sand fraction)

$$\frac{\text{Weight of material retained by particular sieve}}{\text{Total material sieved}} \times 100$$

Reporting of Results

All results will be reported on the appropriate form, an example of which is included herein.

Quality Control

Duplicate analyses (material permitting) will be performed on one in every ten individual samples analyzed or every third group of samples, whichever comes first.

Note 1: Stockham, J.D. and Fochtman, E.G. Particle Size Analysis, Ann Arbor Science Publications Inc.,Ann Arbor, Michigan.

Note 2: These are the "old" US standard sieve numbers. The "new" numbers are the same as the size of the opening in mm for those sieves with openings larger than 0.5mm and the same as the opening in um for those sieves with openings 500um and smaller.

Note 3: Prepare sufficient Calgon solution so that the same solution is used throughout the analysis.

Resource Analysts, Incorporated

Standard Operating Procedure

Title: Particle Size



Sample Report Form

Particle Size Analysis

Laboratory Number _____ Field I.D. _____
Date _____
Analyst _____

% Moisture _____ % Digestible Matter _____

Percent Sand/Silt/Clay

% Sand _____
% Silt _____
% Clay _____
% Silt & Clay _____

Subdivision of Sand Fraction

| Particle Size | US Sieve Number | Percent (of total Sand fraction) |
|---|---|---|
| >2mm | 10 | _____ |
| <2mm, >1mm | 18 | _____ |
| <1mm, >500um | 35 | _____ |
| <500um, >250um | 60 | _____ |
| <250um, >125um | 120 | _____ |
| <125um, >63um | 230 | _____ |
| >63um | Pan | _____ |
| | Total | _____ |

STANDARD OPERATING PROCEDURE FOR THE DETERMINATION OF ORGANIC CARBON IN SOILS AND SEDIMENT:
Walkley and Black's Titration Method.

Date: September 1990

Approved:
Technical Director: _____
Lab Director: _____
QA Officer: _____

CONFIDENTIAL

In this method the soil is digested with chromic and sulfuric acids, making use of the heat of dilution of the sulfuric acid. The excess of chromic acid, not reduced by the organic matter of the soil is then determined by titration with standard ferrous sulfate. Nitrates interfere only if present in amounts in excess of one-twentieth of the carbon content. Carbonates, even when they constitute 50 per cent. of the soil, do not affect the results. Manganese dioxide may also exceed the carbon content by three or four times without introducing serious error. Interference due to significant amounts of chlorides can be overcome by the addition of an excess of silver sulfate to the sulfuric acid as described below or a suitable correction can be applied if the amount of chlorine is known is know. Elementary carbon, such as charcoal or coal, is practically unattacked in this method so this source of error is eliminated.

Reagents:

1N Potassium Dichromate. Dissolve 49.04 g. of reagent grade $K_2Cr_2O_7$ in water and dilute to 1 litre.

Sulfuric Acid. Not less than 96 per cent.
Ferroin indicator solution - same as used in COD.
0.5N Ferrous Ammonium Sulfate. Dissolve 392.0 g. of reagent grade $Fe(NH_4)_2(SO_4)_2.6\ H_2O$ in water, add 15 mL of concentrated sulfuric acid and dilute to 1 litre. Standardize by titrating against 1N potassium dichromate, as described in the method given below.

SAMPLE HANDLING AND PRESERVATION:

Samples should be cooled to 4 degrees Celsius upon collection. The maximum time that soils and sediments may be held prior to analysis has not been established for the method. However the analyst should complete all analyses of samples with twenty eight days of collection unless special preservation techniques (such as drying and/or freezing) are employed.

Calculation of the Results:

One mL of 1N potassium dichromate is equivalent to 3 mg of carbon. The amount of carbon oxidized, expressed as a percentage of the soil, is therefore given by the expression:

$$\frac{V_1 - (V_2/2)}{W} \times 0.003 \times 100$$

CONFIDENTIAL

where $V_1$ = volume of 1N potassium dichromate (10.5 ml)
$V_2$ = volume of 0.5N ferrous ammonium sulfate, in mL
and W = weight by of soil taken.

Normally, Silver sulfate is added to samples to prevent chloride interference. Chlorides interfere because they are oxidized by dichromate to free chlorine. However, a correction may be applied if their amount is known and judged to be significant (<0.1 % of the sample or <10% of the organic carbon present). They react quantitatively with the stoichiometry of 4 Cl to each 2 O or each C. If the soil contained chlorides and the silver sulfate modification was not used, make a correction by deducting one twelfth (i.e. atomic weight of C divided by four times the atomic weight of chlorine) of the percentage of chlorine present from the value calculated above.

Walkley found that the percentage recovery by this method varies from 60% for some subsoils to 90% or more for peat soils, taking values obtained by dry combustion as the standard of comparison. For the majority of agricultural surface soils the mean recovery lies between 75 and 80 percent. As the recovery factor varies with soil type it is considered undesirable to use a general factor unless it has been correlated with the dry combustion values for the soils under examination. It is preferable to report the results obtained without the use of a recovery factor as "single value" determinations and designate the "Organic Carbon, Walkley and Black values."

METHOD:

For this determination the soil sample should be ground to pass a 0.5 mm screen. Transfer a weighed quantity of soil, not exceeding 5 g and containing about 5 - 20 mg of organic carbon to a 250 mL Erlenmeyer flask. Add 5 mL of 1N potassium dichromate followed 10 mL of concentrated sulfuric acid. Where large numbers of analyses have to be carried out, the dichromate is most conveniently added from a burrette with an automatic zero and the sulfuric acid from an automatic pipette. Shake by hand for one minute and leave the flask to stand about 30 minutes. Then add about 100 mL of water, 5 mL of phosphoric acid and 1 mL of ferroin indicator solution. Titrate by adding ferrous ammonium sulphate from the automatic burette until the solution changes from green to brown. If the endpoint is exceeded, add enough 1N potassium dichromate to restore an excess of dichromate and complete the titration by adding ferrous ammonium sulphate drop by drop until the sharp blue-green to brown color change is observed. If more than 1 mL of the 10 mL of potassium dichromate originally taken have been reduced during the digestion, repeat the determination using a smaller quantity of soil.

CONFIDENTIAL

The color change is more difficult to follow in the presence of larger amounts of soil and for this reason not more than 10 g. of soil should ever be used for a determination. Large amounts of calcium sulphate (precipitated from calcareous soils) or silver chloride (if silver sulfate is used to prevent chlorine interference in saline soils) tend to alter the shades of the colors produced. The color change at the end point, however, is still quite sharp and easily recognized.

Where chlorides are present in amounts not in excess of the molecular equivalent of carbon, 0.5 g. of silver sulfate should be dissolved in each 100mL of concentrated sulfuric acid. Twenty mL of this acid then contain sufficient silver to precipitate the whole of the chlorides as silver chloride and so prevent their oxidation by the chromic acid.

CALIBRATION CURVE

Absorbance vs. Concentration

PHENOLS

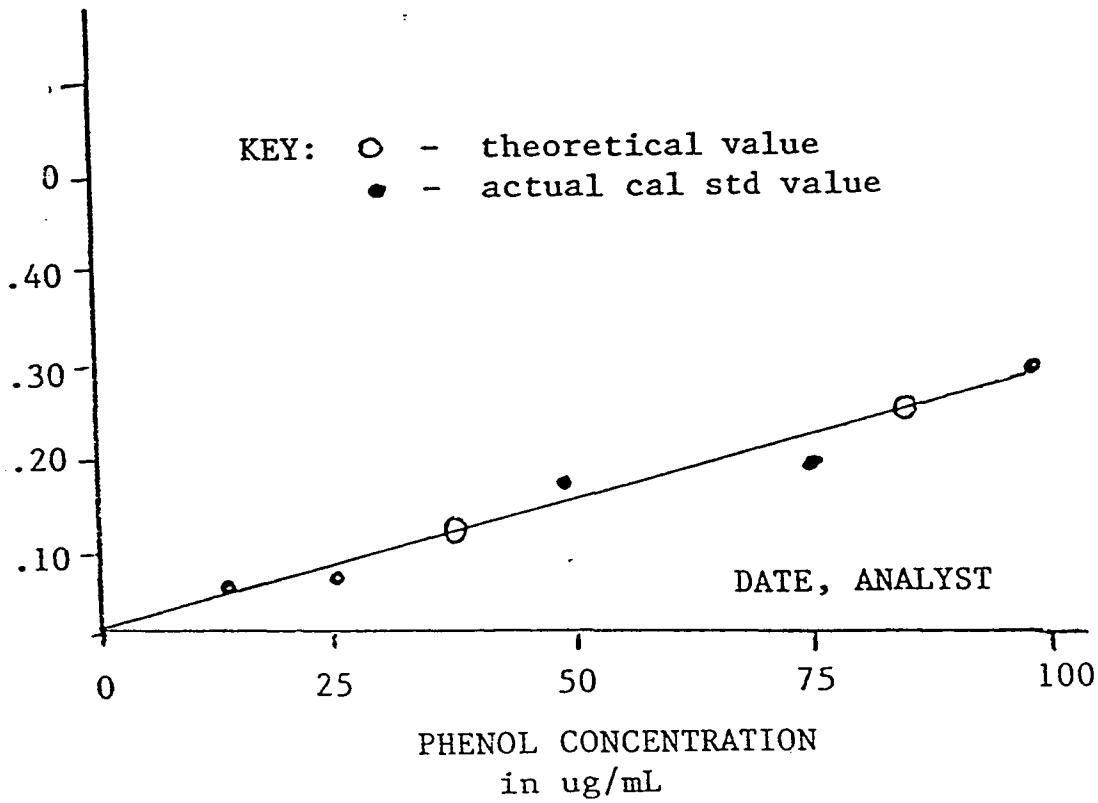

RAI QA 074.1 OSN

Revised LC 6/90

# TOTAL PHENOLS BY SPECTROPHOTOMETRY (LIQUIDS)

CONFIDENTIAL

## PART 1 - DISTILLATION

1. Check and make sure all glassware to be used in this procedure is clean and dry.

2. Assign a separate quality control number to each blank and spike and record this information in the QC log book. One spike and spike duplicate should be extracted every 10 days or 18 samples, whichever occurs first. A blank is extracted with EACH batch of samples.

3. Label a 500 mL distillation flask, and a 250 mL graduated jar for each sample, blank, and spike.

4. Use a graduated cylinder to measure and add 200 mLs of sample to the distillation flask. Record sample volume to the nearest 5 mLs in the technician's notebook.

   If more than one sample is measured using the same graduated cylinder, thoroughly rinse the cylinder with Milli-Q H20, then with methanol and methylene chloride before proceeding to the next sample.

5. Unless otherwise specified, Milli-Q H20 will serve as the method blank, spike, and spike duplicate. For each blank and spike, measure and add 200 mLs of Milli-Q water to a distillation flask.

6. Use pH paper to measure the sample pH. It should be < 2 (dark pink). Adjust if necessary using concentrated H2SO4. Add 3 mLs of conc. H2SO4 to blank and spikes.

7. Using a volumetric pipette, add 5 mLs of Phenol spiking solution [@ 1 ug/mL] to spike samples only. Record spike number and amount added.

8. Add approximately 5 molecular sieves (3Å) to each distillation flask.

9. Assemble distillation apparatus so that distillation flask rests inside of heating mantle, and 250 mL graduated jar is positioned to collect distillate.

10. Turn heat on to high setting, and turn on cooling water to columns.

11. Collect approximately 150 mLs of distillate, then add an additional 50 mLs of Milli-Q H20 to distillation flask and continue distillation until 200 mLs has been collected.

## PART 2 - EXTRACTION

A. REAGENTS AND SOLUTIONS:

Copy to DN 6/30/90

1. Prepare Phenol Stock solution as follows:

   a. Assign standard a number and record preparation data in standards log book.

   b. Weigh 0.250 grams phenol ( > 98% purity) into a 250 mL volumetric flask and dilute to volume with Milli-Q H20. Final conc. = [1000 ug/mL].

   c. Prepare fresh stock solution every two weeks. Label with expriation date. Store in refrigerator in amber colored glass jar. Dispose of leftover in solvent water waste.

2. Prepare a Phenol Working solution from the Phenol Stock solution as follows:

   a. Assign working solution a number and record preparation data in standards log book.

   b. Using a gastight volumetric syringe, measure 100 uL of phenol stock into a 100 mL volumetric flask and dilute to volume with Milli-Q H20. Final conc. = [1 ug/mL].

   c. Shelf life of working solution is 2 hours. Dispose of extra in solvent water waste.

3. Buffer solution:

   Dissolve 16.9 grams ammonium chloride (NH4Cl) in 143 mLs of concentrated ammonium hydroxide (NH4OH), and dilute to 250 mLs with Milli-Q H20. Shelf life is one month. Label with expiration date. Dispose of extra in solvent water waste after neutralizing with acid.

4. Aminoantipyrine solution:

   Dissolve 1.0 gram of 4-aminoantipyrine solution in Milli-Q H20 and dilute to 50 mLs. Prepare fresh daily. Dispose of extra in cyanide waste.

5. Potassium ferricyanide solution:

   Dissolve 8 grams of potassium ferricyanide in Milli-Q H20 and dilute to 100 mLs. Shelf life is one week. Label with expiration date. Dispose of extra in dilute metals waste.

B. EXTRACTION PROCEDURE

1. Assemble a chloroform-rinsed 250 mL separatory funnel with stopcock and stopper, a small acetone-rinsed funnel, and an acetone-rinsed 16 mL vial for each extract. Label sep funnels and vials.

2. Transfer distillate to separatory funnel. Rinse 250 mL graduated jar twice with several mLs of Milli-Q water, and transfer rinses to

separatory funnel.

3. Two phenol standards, @ 0 and 0.05 ug/mL, will be extracted along with the distilled samples. Prepare as follows:

a. The 0 ug/mL standard consists of 200 mLs of Milli-Q water added to a labeled separatory funnel.

b. For the 0.05 ug/mL standard, add 10 mLs of Phenol working solution [@ 1 ug/mL] to a 200 mL volumetric flask, and dilute to volume with Milli-Q H20. Transfer to labeled separatory funnel as for distillates.

4. To each separatory funnel, add 8.0 mLs of buffer solution. Check pH with pH paper. It should be > 10 (dark purple).

5. To each sep funnel, add 1.25 mLs of aminoantipyrine solution and mix, then add 1.25 mLs of potassium ferricyanide solution and mix.

6. Let separatory funnels stand for 3 minutes, then add 10 mLs of chloroform to each.

7. Shake and vent each funnel under the hood until there is no more pressure build up, then shake funnel for 1 minute. Allow phases to separate for approximately 1 minute, then shake again for 1 minute. Allow phases to separate.

8. Prepare a Na2SO4 filter by placing filter paper in small glass funnel and filling to a depth of 2-3 cm with Na2SO4. Moisten filter with chloroform and let drain. Place funnel on top of 16 mL vial.

9. Filter chloroform extract through sodium sulfate into 16 mL vial. Allow to drain and cap vial tightly. DO NOT add additional chloroform.

10. Analyze extracts by spectrophotometry.

PART 3 - ANALYSIS

1. Refer to Milton Roy Spectronic 301 Spectrophotometer manual for operating instructions.

2. Operate spectrophotometer in absorbance mode with wavelength selector set to 460 nm. Allow a 30 minute warm up time.

3. Obtain a clean cuvette and use a Kimwipe to remove any cloudiness on external surfaces.

Never touch the lower part of the cuvette with fingers as fingerprints absorb and scatter light.

4. Fill cuvette with chloroform and insert into sample compartment. Close the sample compartment cover and press auto zero.

5. Remove the blank and insert cuvette with the sample into the sample

compartment. Close cover and read absorbance. Record absorbance (to 3 significant figures) in technician's notebook.

Rinse cuvette thoroughly with chloroform between samples. Dispose of rinsings in chlorinated waste container.

6. If sample absorbance is greater than the highest standard of the calibration curve range, sample must be diluted such that absorbance falls between the highest and lowest standards of the curve. Use a volumetric flask and syringe to perform exact dilution. Record dilution in technician's notebook.

7. Calculate and report results. Refer to Section 4 for calculation procedure.

PART 4 - CALCULATIONS

1. Calculate Phenol results for samples and blanks in ug/L as follows:

a. Subtract absorbance value of 0 ug/mL standard from absorbance value of undiluted samples to obtain blank corrected value.

DO NOT blank correct absorbance value if sample was diluted.

b. Read sample concentration value from most recent Phenol calibration curve of absorbance vs. concentration and use it to calculate result:

$$\text{Phenol ug/L} = \frac{\text{10 mLs (= vol. of chloroform extract)} \times \text{conc. value in ug/mL (use 3 sig figs)} \times \text{dilution factor}}{\text{initial sample volume (L)}}$$

NOTE: Round final results to 2 significant figures.

4. Calculate percent recovery for spikes as follows:

a. First calculate total amount of spike added (ug/L)

$$\frac{\text{spike conc. (ug/mL)} \times \text{\# mLs added}}{\text{initial sample volume (L)}} = \text{ug/L added}$$

b. Then calculate % recovery

$$\frac{\text{spike result (ug/L)}}{\text{ug/L added}} \times 100 = \text{\% recovered}$$

c. IF actual sample was used for matrix spike instead of Milli-Q water, spike result must first be corrected for sample results as follows:

$$\frac{\text{spike result (ug/L)} - \text{sample result (ug/L)}}{\text{ug/L added}} \times 100 = \text{\% recovered}$$

PART 5 - PREPARATION OF PHENOL CALIBRATION CURVE

1. Prepare 6 calibration standards from dilutions of the Phenol working standard @ 1 ug/mL (prepared as in Part 2A, steps 1 & 2). Standards should be prepared at the following levels: 0, .015, .025, .050, .075, and .100 ug/L. Prepare 200 mLs of each standard as follows:

| Cal Standard Conc. [ug/mL] | mLs working solution added to 200 mL FV |
|---|---|
| 0.0 | 0.0 |
| .015 | 3.0 |
| .025 | 5.0 |
| .050 | 10.0 |
| .075 | 15.0 |
| .100 | 20.0 |

2. Extract standards as for samples, and read absorbances on spectrophotometer (record results to 3 significant figures). Blank correct absorbance values against the 0 ug/mL standard.

3. Using a scientific calculator with a linear regression program, enter each pair of absorbance vs. concentration values (enter absorbance as y value, concentration as x value). The linear regression program will generate the best fitting line through the data points.

Refer to appropriate manual or handbook for data entry and storage instructions.

4. Determine the slope, intercept, and linear correlation coefficient of the calibration curve. Correlation coefficient should approach 0.999.

5. Choose 2 or 3 theoretical absorbance values, and enter them into the linear regression program to determine corresponding concentration values. Plot absorbance vs. concentration for these theoretical data points, and draw a line through them. This line is your calibration curve. See attached example.

6. Plot absorbance vs. concentration data points for the actual calibration standards on the cal curve. This provides a visual confirmation of linearity. Date calibration curve and store in Phenol QC logbook.

7. Record calibration curve slope (PHENOLM) and intercept values (PHENOLB) in LABSAM under auxiliary file entry (AFSENT) as follows:

File name - $CALIB
Name of factor - PHENOLM (or PHENOLB)
Modify
Enter new calibration factor

## PART 6 - QA/QC REQUIREMENTS

1. Extraction blanks

   If blank result does not fall below minimum detection limit for procedure, blank and associated samples must be re-distilled and re-analyzed. MDL = 10 ug/L

2. Matrix spike and matrix spike duplicate

   a. Calculate and report the Relative Percent Difference (RPD) between matrix spike and matrix spike duplicate as follows:

$$RPD = \frac{D1 - D2}{(D1 + D2) / 2} \times 100$$

   Where D1 = 1st spike value, and D2 = 2nd spike value. Acceptable RPD limit is 50-150%.

   b. Acceptable recoveries for individual spikes are 50-150% of true value. Spikes falling outside of these limits, and associated samples, must be re-distilled and re-analyzed.

3. Continuing calibration % error

   a. Calculate % error for extracted .05 ug/mL standard as follows:

$$\% \text{ error} = \frac{\text{actual standard result} - \text{theoretical result}}{\text{theoretical standard result}} \times 100$$

   b. A new calibration curve must be prepared when the % error for the .05 ug/mL standard is >= 20%. Record % error values in Phenol QC logbook.

Method References

Methods 510A and B "Standard Methods for the Examination of Water and Wastewater", 16th Edition, 1985, APHA.

USEPA Method 420.1 "Methods for Chemical Analysis of Water and Wastes", EPA Publication EPA-600/4-79-020.

CALIBRATION CURVE

Absorbance vs. Concentration

PHENOLS

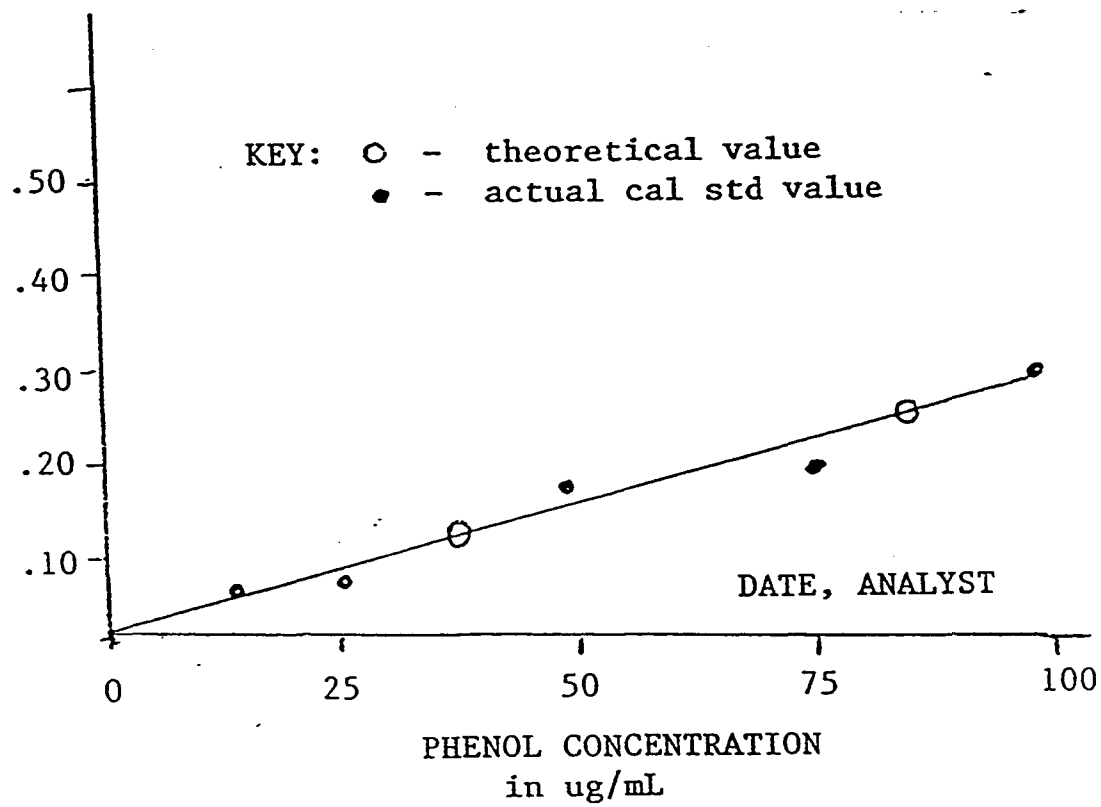

RAI QA 074.2 DSN

Revised LC 6/90

# TOTAL PHENOLS BY SPECTROPHOTOMETRY (SOLIDS)

CONFIDENTIAL

## PART 1 - DISTILLATION

1. Check and make sure all glassware to be used in this procedure is clean and dry.

2. Assign a separate quality control number to each blank and spike and record this information in the QC log book. One spike and spike duplicate should be extracted every 10 days or 18 samples, whichever occur first. A blank is extracted with EACH batch of samples.

3. Label a 500 mL distillation flask, a 250 mL graduated jar, and a 150 mL beaker for each sample, blank, and spike.

4. Stir sample well, then weigh approximately 10 grams into tared 150 mL beaker. Record weight to the nearest 0.1 gram in the technician's notebook.

5. Unless otherwise specified, blank sand will serve as the method blank, spike, and spike duplicate. For each blank and spike, weigh approximately 10 grams of blank sand into beaker and record weight.

6. Adjust pH of samples, including blank and spikes to < 2 (dark pink) with concentrated $H_2SO_4$. Test pH by touching pH paper to solid sample. Add more acid as needed.

7. Rinse sample into labeled distillation flask using 200 mLs of Milli-Q water. Swirl to mix.

8. Check pH of water and sample again. It should be < 2. Adjust if necessary with additional $H_2SO_4$.

9. Using a volumetric pipette, add 5 mLs of Phenol spiking solution [@ 1 ug/mL] to spike samples only. Record spike number and amount added.

10. Add approximately 5 molecular sieves (3Å) to each distillation flask.

11. Assemble distillation apparatus so that distillation flask rests inside of heating mantle, and 250 mL graduated jar is positioned to collect distillate.

12. Turn heat on to high setting, and turn on cooling water to columns.

13. Collect approximately 150 mLs of distillate, then add an additional 50 mLs of Milli-Q $H_2O$ to distillation flask and continue distillation until 200 mLs has been collected.

## PART 2 - EXTRACTION

A. REAGENTS AND SOLUTIONS:

Copy to DN 6/29/90

1. Prepare Phenol Stock solution as follows:

   a. Assign standard a number and record preparation data in standards log book.

   b. Weigh 0.250 grams phenol ( > 98% purity) into a 250 mL volumetric flask and dilute to volume with Milli-Q H20. Final conc. = [1000 ug/mL].

   c. Prepare fresh stock solution every two weeks. Label with expiration date. Store in refrigerator in amber colored glass jar. Dispose of leftover in solvent water waste.

2. Prepare a Phenol Working solution from the Phenol Stock solution as follows:

   a. Assign working solution a number and record preparation data in standards log book.

   b. Using a gastight volumetric syringe, measure 100 uL of phenol stock into a 100 mL volumetric flask and dilute to volume with Milli-Q H20. Final conc. = [1 ug/mL].

   c. Shelf life of working solution is 2 hours. Dispose of extra in solvent water waste.

3. Buffer solution:

   Dissolve 16.9 grams ammonium chloride (NH4Cl) in 143 mLs of concentrated ammonium hydroxide (NH4OH), and dilute to 250 mLs with Milli-Q H20. Shelf life is one month. Dispose of extra in solvent water waste after neutralizing with acid.

4. Aminoantipyrine solution:

   Dissolve 1.0 gram of 4-aminoantipyrine solution in Milli-Q H20 and dilute to 50 mLs. Prepare fresh daily. Dispose of extra in cyanide waste.

5. Potassium ferricyanide solution:

   Dissolve 8 grams of potassium ferricyanide in Milli-Q H20 and dilute to 100 mLs. Shelf life is one week. Label with expiration date. Dispose of extra in dilute metals waste.

B. EXTRACTION PROCEDURE

1. Assemble a chloroform-rinsed 250 mL separatory funnel with stopcock and stopper, a small acetone-rinsed funnel, and an acetone-rinsed 16 mL vial for each extract. Label sep funnels and vials.

2. Transfer distillate to separatory funnel. Rinse 250 mL graduated jar twice with several mLs of Milli-Q water, and transfer rinses to

separatory funnel.

3. Two phenol standards, @ 0 and .05 ug/mL, will be extracted along with the distilled samples. Prepare as follows:

a. The 0 ug/L standard consists of 200 mLs of Milli-Q water added to a labeled separatory funnel.

b. For the .05 ug/mL standard, add 10 mLs of Phenol working solution [@ 1 ug/mL] to a 200 mL volumetric flask, and dilute to volume with Milli-Q H20. Transfer to labeled separatory funnel as for distillates.

4. To each sep funnel, add 8.0 mLs of buffer solution. Check pH with pH paper. It should be > 10 (dark purple).

5. To each sep funnel, add 1.25 mLs of aminoantipyrine solution and mix, then add 1.25 mLs of potassium ferricyanide solution and mix.

6. Let separatory funnels stand for 3 minutes, then add 10 mLs of chloroform to each.

7. Shake and vent each funnel under the hood until there is no more pressure build up, then shake funnel for 1 minute. Allow phases to separate for approximately 1 minute, then shake again for 1 minute. Allow phases to separate.

8. Prepare a Na2SO4 filter by placing filter paper in small glass funnel and filling to a depth of 2-3 cm with Na2SO4. Moisten filter with chloroform and let drain. Place funnel on top of 16 mL vial.

9. Filter chloroform extract through sodium sulfate into 16 mL vial. Allow to drain and cap vial tightly. DO NOT add additional chloroform.

10. Analyze extracts by spectrophotometry.

PART 3 - ANALYSIS

1. Refer to Milton Roy Spectronic 301 Spectrophotometer manual for operating instructions.

2. Operate spectrophotometer in absorbance mode with wavelength selector set to 460 nm. Allow a 30 minute warm up time.

3. Obtain a clean cuvette and use a Kimwipe to remove any cloudiness on external surfaces.

Never touch the lower part of the cuvette with fingers as fingerprints absorb and scatter light.

4. Fill cuvette with chloroform and insert into sample compartment. Close the sample compartment cover and press auto zero.

5. Remove the blank and insert cuvette with the sample into the sample

compartment. Close cover and read absorbance. Record absorbance (to 3 significant figures) in technician's notebook.

Rinse cuvette thoroughly with chloroform between samples. Dispose of rinsings in chlorinated waste container.

6. If sample absorbance is greater than the highest standard of the calibration curve range, sample must be diluted such that the absorbance falls between the highest and lowest standards of the curve. Use a volumetric flask and syringe to perform exact dilution. Record dilution in technician's notebook.

7. Calculate and report results. Refer to Section 4 for calculation procedure.

PART 4 - CALCULATIONS

1. Sample results are reported on a dry weight basis whenever possible. Look up percent dry weight figure for each sample number and calculate dry weight for extracted sample as follows:

Calculated dry weight = sample weight x sample percent dry

2. Calculate Phenol results for samples and blanks in ug/g as follows:

a. Subtract absorbance value of 0 ug/L standard from absorbance value of undiluted samples to obtain blank corrected value.

DO NOT blank correct absorbance value if sample was diluted.

b. Read sample concentration value from most recent Phenol calibration curve of absorbance vs. concentration and use it to calculate result:

$$\text{Phenol ug/g} = \frac{\text{10 mLs (= vol. of chloroform extract)} \times \text{conc. value in ug/mL (use 3 sig figs)} \times \text{dilution factor}}{\text{sample dry weight (g)}}$$

NOTE: Round final results to 2 significant figures.

3. Calculate percent recovery for spikes as follows:

a. First calculate total amount of spike added (ug/g)

$$\frac{\text{spike conc. (ug/mL)} \times \text{\# mLs added}}{\text{initial sample weight (g)}} = \text{ug/g added}$$

b. Then calculate % recovery

$$\frac{\text{spike result (ug/g)}}{\text{ug/g added}} \times 100 = \text{\% recovered}$$

c. IF actual sample was used for matrix spike instead of clean sand, spike result must first be corrected for sample results as follows:

$$\frac{\text{spike result (ug/g)} - \text{sample result (ug/g)}}{\text{ug/g added}} \times 100 = \%\ \text{recovered}$$

PART 5 - PREPARATION OF PHENOL CALIBRATION CURVE

1. Prepare 6 calibration standards from dilutions of the Phenol working standard @ 1 ug/mL (prepared as in Part 2A, steps 1 & 2). Standards should be prepared at the following levels: 0, .015, .025, .050, .075, and .100 ug/mL. Prepare 200 mLs of each standard as follows:

| Cal Standard Conc. [ug/mL] | mLs working solution added to 200 mL FV |
|---|---|
| 0 | 0.0 |
| .015 | 3.0 |
| .025 | 5.0 |
| .050 | 10.0 |
| .075 | 15.0 |
| .100 | 20.0 |

2. Extract standards as for samples, and read absorbances on spectrophotometer (record result to 3 significant figures). Blank correct absorbance values against the 0 ug/mL standard.

3. Using a scientific calculator with a linear regression program, enter each pair of absorbance vs. concentration values (enter absorbance as y value, concentration as x value). The linear regression program will generate the best fitting line through the data points.

Refer to appropriate manual or handbook for data entry and storage instructions.

4. Determine the slope, intercept, and linear correlation coefficient of the calibration curve. Correlation coefficient should approach 0.999.

5. Choose 2 or 3 theoretical absorbance values, and enter them into the linear regression program to determine corresponding concentration values. Plot absorbance vs. concentration for these theoretical data points, and draw a line through them. This line is your calibration curve. See attached example.

6. Plot absorbance vs. concentration data points for the actual calibration standards on the cal curve. This provides a visual confirmation of linearity. Date calibration curve and store in Phenol QC logbook.

7. Record calibration curve slope (PHENOLM) and intercept values (PHENOLB) in LABSAM under auxiliary file entry (AFSENT) as follows:

File name - $CALIB
Name of factor - PHENOLM (or PHENOLB)
Enter "M" for modify
Enter new calibration factor

PART 6 - QA/QC REQUIREMENTS

1. Extraction blanks

If blank result does not fall below minimum detection limit for procedure, blank and associated samples must be re-distilled and re-analyzed. MDL = 0.20 ug/g

2. Matrix spike and matrix spike duplicate

a. Calculate and report the Relative Percent Difference (RPD) between matrix spike and matrix spike duplicate as follows:

$$RPD = \frac{D1 - D2}{(D1 + D2) / 2} \times 100$$

Where D1 = 1st spike value, and D2 = 2nd spike value. Acceptable RPD limit is 50-150%.

b. Acceptable recoveries for individual spikes are 50-150% of true value. Spikes falling outside of these limits, and associated samples, must be re-distilled and re-analyzed.

3. Continuing calibration % error

a. Calculate % error for extracted .050 ug/mL standard as follows:

$$\% \text{ error} = \frac{\text{actual standard result} - \text{theoretical result}}{\text{theoretical standard result}} \times 100$$

b. A new calibration curve must be prepared when the % error for the .050 ug/mL standard is >= 20%. Record % error values in Phenol QC logbook.

Method References

Methods 510A and B "Standard Methods for the Examination of Water and Wastewater", 16th Edition, 1985, APHA.

USEPA Method 420.1 "Methods for Chemical Analysis of Water and Wastes", EPA Publication EPA-600/4-79-020.

RAI QA 070.1 DSN

Revised LC 6/90

# OIL AND GREASE & PETROLEUM HYDROCARBONS BY IR OR GRAVIMETRY (LIQUIDS - SEPARATORY FUNNEL EXTRACTION)

CONFIDENTIAL

## PART 1 - EXTRACTION PROCEDURE

1. Check and make sure all glassware is clean and dry. Thoroughly solvent rinse all glassware used in this procedure with freon before proceeding.

2. Assign a separate quality control number to each blank and spike and enter this information in the QC log book. One spike and spike duplicate should be extracted every 10 days or 18 samples, whichever occurs first. A blank is extracted with EACH batch.

3. Obtain a 2 liter separatory funnel with stopcock and stopper, a 250 mL flat bottom flask, and a large glass funnel for each sample, blank and spike. Label glassware with sample number and type.

4. Prepare a $Na_2SO_4$ filter funnel by placing fluted filter paper in funnel and filling to a depth of several cm with $Na_2SO_4$. Rinse funnel and contents with freon and let drain into a freon waste container. Place funnel on top of 250 mL flask.

5. IF sample is contained in a 1-liter glass bottle, pour the entire sample directly into the separatory funnel. Save sample container and lid for use in later steps.

6. IF sample volume is more than 1 liter, use a graduated cylinder to measure and add 1 liter of sample to the separatory funnel. Record sample volume to the nearest 5 mLs in the technician's notebook.

   If more than one sample is measured using the same graduated cylinder, thoroughly rinse the cylinder with water, then with methanol and freon before proceeding to the next sample.

7. Unless otherwise specified, Milli-Q water will serve as the method blank, spike, and spike duplicate. For each blank and spike, measure and add 1 liter of Milli-Q water to a separatory funnel.

8. PH of samples, including blank and spikes, should be <= 2 (dark pink). Test pH with pH paper, and adjust if necessary with 1+1 HCl.

9. Add 10 mLs saturated NaCl solution to each sep funnel.

10. Using a volumetric pipette, add the appropriate spiking solution to spike samples only (add 5.0 mLs to gravimetry samples, 1.0 mL to IR samples). Record spike number and amount added.

11. If sample bottle was saved (step 5 above), add 30 mLs of freon to bottle, replace lid, and shake briefly to rinse. Decant freon into the appropriate sep funnel. Otherwise, add freon directly to the separatory funnel.

Copy to DSN 12/9/90

12. Shake and vent each funnel under the hood until there is no more pressure build up. Place on mechanical shaker and shake slowly for 30 seconds with stopcocks open. Then close stopcocks and shake more rapidly for 4 minutes.

13. Remove from shaker and allow the organic layer to separate from the water layer for approximately ten minutes. Swirl the sep funnel several times to drop any freon floating on the surface to the bottom.

14. If an emulsion layer is not present, drain the freon layer through the Na2SO4 filter into the appropriate 250 mL flask.

15. If an emulsion layer is present, drain into a labeled centrifuge bottle and centrifuge for 5 minutes. Pipet freon layer (bottom) through the Na2SO4 filter into the appropriate 250 mL flask. Return water layer (top) to separatory funnel.

16. Repeat extraction steps (11-15) twice more.

17. Determine original sample volume by pouring extracted water sample from the separatory funnel into a 1 liter graduated cylinder. Record sample volume to the nearest 5 mLs in the technician's notebook, then discard sample in solvent water waste.

18. Using a freon wash bottle, rinse filter and Na2SO4 with 5-10 mLs of freon and let drain.

> IMPORTANT: Always use pure freon (not redistilled) for IR samples. Redistilled freon may be used for gravimetry extractions only.

19. After draining, dump filters onto a tray covered with paper towels and let dry under hood. Discard when dry.

20. IF extract will be analyzed for petroleum hydrocarbons ONLY, add approximately 3 grams of silica gel to the 250 mL flask, and swirl to mix for about 1 minute. DO NOT add silica gel to samples being analyzed for oil and grease.

> If PHC samples are highly colored, add as much silica gel as needed to remove color, or until silica added remains white.

21. For PHC extracts only, prepare a second filter funnel by placing fluted filter paper in a large glass funnel and filling to a depth of several cm with sodium sulfate. Rinse the funnel and contents 3 times with 10-15 mLs of freon and let drain into freon waste container. Drain well between rinses.

22. If extract will be analyzed by gravimetry, transfer from the 250 mL flask into a tared, pre-prepped gravimetry flask. If extract will be analyzed by IR, transfer into a 100 mL volumetric flask.

> PHC extracts must be filtered into the gravimetry or volumetric flask through the Na2SO4 filter funnel to remove the silica gel.

23. Use a wash bottle to rinse the 250 mL flask 3 times with freon and decant rinses into appropriate flask.

24. For PHC extracts only, rinse filter with additional freon and let drain, taking care not to exceed 100 mL final volume. Adjust final volume to 100 mL mark with freon, stopper flask, and tilt to mix.

26. Analyze extracts by IR spectroscopy or gravimetry.

PART 2 - ANALYSIS

A. GRAVIMETRY

1. Prepare 250 mL flat bottom gravimetry flasks as follows:

   a. Wash in hot soapy water.

   b. Rinse 3 times with tap water, then 3 times with DI water.

   c. VERY IMPORTANT: Following DI rinses, handle flasks with tongs ONLY - do not touch them!

   d. Solvent rinse flasks with MeOH, then MeCl2.

   e. Bake flasks at 100 degrees C for 1 hour. Allow to cool.

   f. Place in dessicator for 24 hours.

2. Weigh each clean flask on the analytical balance, then tip flask upside down for approximately 1 minute, and re-weigh. Continue to tip and re-weigh flasks until a constant weight is reached.

3. Record flask tare weight to the nearest 0.0001 gram in the technician's notebook. Use etched numbers to identify flasks.

4. Filter extracts into tared flasks as in steps 22-24 (Part 1, above). In technician's notebook, record sample number corresponding to each flask.

5. Using tongs, transfer flasks to hot plates and heat at setting #4 until freon has evaporated completely.

6. Place flasks tipped on their sides on paper towels for 1/2 hour, then place in sealed dessicator for 24 hours.

7. Weigh flasks on analytical balance as in step 2 (above) and record gross weights to the nearest 0.0001 gram.

8. Subtract tare weight from gross weight and record sample residue weight in milligrams (residue x 1000).

9. Calculate and report results for oil and grease in mg/L. Refer to

Section 3 for calculation procedure.

B. INFRARED SPECTROSCOPY

1. Refer to Perkin Elmer Model 1420 Recording Infrared Spectrophotometer manual for operating instructions.

2. Operate IR at the following settings:

Slit program 3
Chart expansion 1
Baseline offset 93
Scan from 3400 to 2600 wavenumbers ($cm^{-1}$)
Nitrogen purge - ON

3. Using a Kimwipe, clean two matched 5 cm IR cells to remove any cloudiness or fingerprints on external surfaces.

4. Prior to analyzing samples, check instrument operation by scanning a freon/freon blank as follows:

a. Fill both IR cells with clean freon.

b. Place one cell in the path of the sample beam (sample holder closer to operator), and one in the path of the reference beam (sample holder away from operator).

c. Scan as specified above. No visible bands should be observed.

5. Check continuing calibration and instrument reproducibilty as follows:

a. Prepare a fresh 50 ug/mL Oil and Grease standard in freon from a dilution of Oil and Grease STOCK standard.

b. Remove IR cell from sample beam position and replace the freon in the cell with the 50 ug/mL standard. Return IR cell to sample holder.

c. Scan the standard twice and calculate results. Refer to Section 3 for calculation procedure. Refer to Section 5 for QA/QC requirements.

d. If continuing calibration % error is < 20% and duplicate standards agree within 50-150%, proceed to analysis of extraction blank.

6. Scan extraction blank and calculate result. If result falls below minimum detection limit for this procedure (MDL = 1 mg/L), proceed to sample analysis.

7. Scan samples, then calculate and report results. Refer to Section 3 for calculation procedure.

IR cell must be thoroughly rinsed with freon between samples.

## PART 3 - CALCULATIONS

### A. GRAVIMETRY CALCULATIONS

1. Calculate O&G or PHC result for samples and blanks in mg/L as follows:

$$\text{Oil \& Grease (or PHC) mg/L} = \frac{\text{mg residue}}{\text{sample volume (L)}}$$

NOTE: Report results to 2 significant figures.

3. Calculate Percent recovery for spikes as follows:

a. First calculate total amount of spike added (mg/L):

$$\frac{\text{spike conc. (ug/mL)} \times \text{\# mLs added}}{\text{initial sample volume (L)}} \times \frac{1\text{ mg}}{1000\text{ ug}} = \text{mg/L added}$$

b. Then calculate % recovery:

$$\frac{\text{spike result (mg/L)}}{\text{mg/L added}} \times 100 = \text{\% recovered}$$

c. IF actual sample was used for matrix spike instead of clean sand, spike result must first be corrected for sample results as follows:

$$\frac{\text{spike result (mg/L)} - \text{sample result (mg/L)}}{\text{mg/L added}} \times 100 = \text{\% recovered}$$

### B. IR ANALYSIS CALCULATIONS

1. Calculate sample absorbance to 3 significant figures by doing peak analysis of IR spectrum (see attached example).

$$\text{Absorbance} = \text{Log} \frac{1}{(\text{Peak}) + (1 - \text{baseline})}$$

2. Read sample concentration (R-value) from most recent O&G / PHC absorbance vs. concentration calibration curve. Record result to 3 significant figures.

3. If sample absorbance is greater than the highest standard of the calibration curve range, sample must be diluted such that the absorbance falls between the highest and lowest standards of the curve. Use a volumetric flask and syringe to perform exact dilution.

Record dilution in technician's notebook.

5. Calculate O&G or PHC results for samples and blanks in mg/L as follows:

$$\text{Oil \& Grease or PHC (mg/L)} = \frac{\text{R-value (3 sig fig) in ug/mL} \times \text{extract final volume in mLs} \times \text{dilution factor}}{\text{sample volume (L)}} \times \frac{1\ \text{ug}}{1000\ \text{mg}}$$

NOTE: Round final results to 2 significant figures.

6. Calculate spike % recoveries as for gravimetric analysis.

PART 4 - PREPARATION OF IR CALIBRATION CURVE

1. Prepare Oil & Grease STOCK standard for IR as follows:

a. Freon rinse a 100 mL volumetric flask.

b. Assign standard a number and record preparation data in standards log book.

c. Using a 250 uL syringe, add the following standards ( > 98% purity) to the flask:

187 uL hexadecane
188 uL iso-octane
125 uL chlorobenzene

d. Dilute to 100 mL volume with freon (Final conc. = 5000 ug/mL), and label with expiration date. Shelf life = 6 months.

e. Store stock standard in refrigerator.

2. Prepare 5 calibration standards from dilutions of the O&G stock standard. Standards should be prepared at the following levels: 10, 25, 50, 75, and 100 ug/mL. Prepare 50 mLs of each standard as follows:

| Cal Standard Conc. [ug/mL] | uL stock added to 50 mLs FV |
|---|---|
| 10 | 100 |
| 25 | 250 |
| 50 | 500 |
| 75 | 750 |
| 100 | 1000 |

3. Analyze individual calibration standards by IR. Calculate IR absorbance at each standard concentration by peak analysis (refer to IR calculations section).

4. Using a scientific calculator with a linear regression program, enter each pair of absorbance vs. concentration values (enter absorbance as y value, concentration as x value). The linear regression function will generate the best fitting line through the data points.

Refer to appropriate manual or handbook for data entry and storage instructions.

5. Determine the slope, intercept, and linear correlation coefficient of the calibration curve data. Correlation coefficient should approach 0.999.

6. Choose 2 or 3 theoretical absorbance values, and enter them into the linear regression program to determine corresponding concentration values. Plot absorbance vs. concentration for these theoretical data points, and draw a line through them. This line is your calibration curve. See attached example.

7. Plot absorbance vs. concentration data points for the actual calibration standards on the cal curve. This provides a visual confirmation of linearity. Date calibration curve and store in IR QC logbook.

8. Record calibration curve slope (IRM) and intercept values (IRB) in LABSAM under auxiliary file entry (AFSENT) as follows:

File name - $CALIB
Name of factor - IRM (or IRB)
Enter "M" for modify
Enter new calibration factor

PART 5 - QA/QC REQUIREMENTS

1. Extraction blanks

If result does not fall below minimum detection limit for procedure, blank and associated samples must be re-extracted and re-analyzed.

MDL = 1.0 mg/L (IR), 5.0 mg/L (Gravimetry)

2. Matrix spike and matrix spike duplicate

a. Calculate and report the Relative Percent Difference (RPD) between matrix spike and matrix spike duplicate as follows:

$$RPD = \frac{D1 - D2}{(D1 + D2) / 2} \times 100$$

Where D1 = 1st spike value, and D2 = 2nd spike value. Acceptable RPD limit is 50-150%.

b. Acceptable recoveries for individual spikes are 50-150% of true value. Spikes falling outside of these limits, and

associated samples, must be re-extracted.

3. Continuing calibration % error

a. Calculate % error for 50 ug/mL standard as follows:

$$\% \text{ error} = \frac{\text{actual standard result} - \text{theoretical result}}{\text{theoretical standard result}} \times 100$$

b. A new calibration curve must be prepared when the % error for the mid point standard is >= 20 %. Record % error values in IR QC logbook.

4. Polystyrene film

Scan polystyrene film sample by IR at least once weekly and compare result to expected result in IR manual to ensure the instrument is working properly.

5. Detection Limits

Minimum detection limits may need to be raised if sample volume is limited, i.e. if only 250 mLs of liquid sample is available for extraction instead of 1 liter, MDL is raised by a factor of 4.

PART 6 - SPIKE PREPARATION

1. Spikes are prepared as follows:

a. Freon rinse a 100 mL volumetric flask for each spike. Assign an individual spike number and record in standards logbook.

b. Using an analytical balance, weigh the following standard quantities into flask:

| Oil and Grease Spike | | Petroleum Hydrocarbon Spike |
|---|---|---|
| Diesel fuel | 0.25 g | Diesel fuel 0.50 g |
| Corn oil | 0.25 g | |

c. Record weights to the nearest 0.0001 gram and record in standards logbook.

d. Dilute to 100 mL final volume in freon. Calculate and record exact concentration (approximately 5000 ug/mL) in standards logbook. Label with 6 month expiration date.

2. Add 1.0 mLs of the appropriate spike solution to IR spike samples, and 5.0 mLs to gravimetry spike samples.

Method References:

O & G, PHC L/L by IR - EPA 418.1, SM 503B,E
O & G, PHC L/L by Gravimetry - EPA 418.1 Mod., SM 503A,E

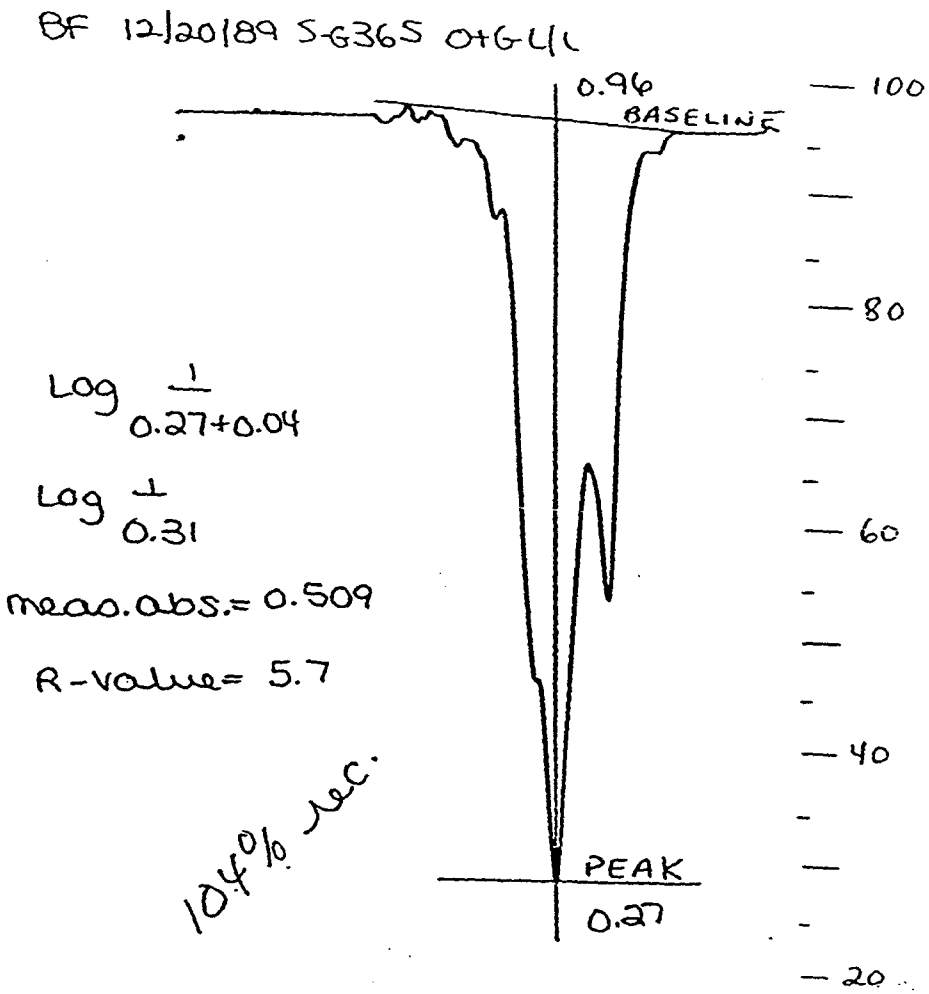


Example 1. Calculation of IR absorbance by peak analysis.

CALIBRATION CURVE

Absorbance vs. Concentration
Oil & Grease / PHC

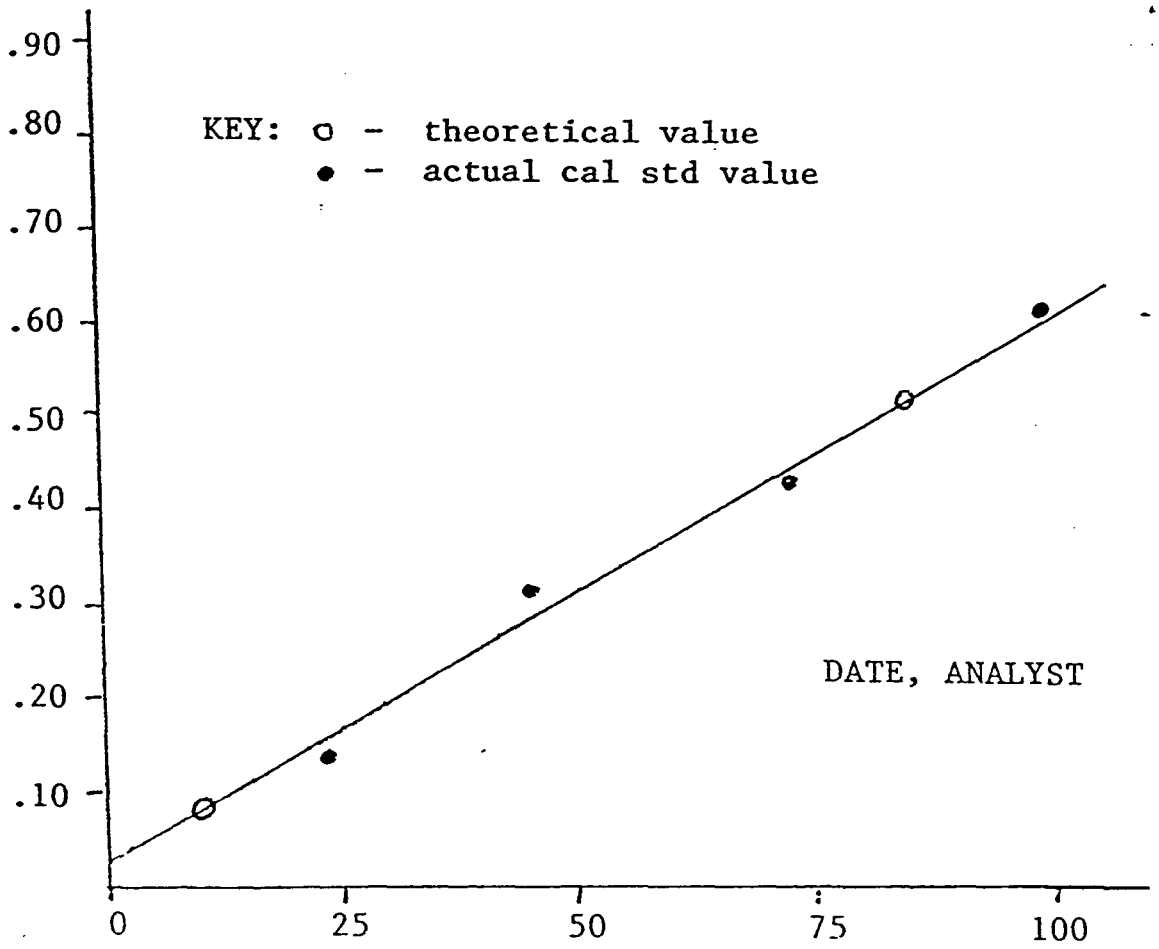


O & G / PHC CONCENTRATION
in ug/mL

RAI QA 070.2

Revised LC 6/90

# OIL AND GREASE & PETROLEUM HYDROCARBONS BY IR OR GRAVIMETRY (SOLIDS - SOXHELET EXTRACTION)

CONFIDENTIAL

## PART 1 - EXTRACTION PROCEDURE

1. Obtain the following glassware and apparatus for each sample, blank and spike:

- glass thimble
- 250 mL flat bottom flask
- 150 mL beaker
- 200 mL volumetric flask with glass stopper
- glass filter funnels (100 mm diameter)
- scoopula

2. Label beakers, flat bottom flasks, and volumetric flasks with sample number and type.

3. Check and make sure all glassware is clean and dry. Thoroughly solvent rinse all glassware used in this procedure with freon before proceeding.

4. Assign a separate quality control number to each blank and spike and enter this information in the QC log book. One spike and spike duplicate should be extracted every 10 days or 18 samples, whichever occurs first. A blank is extracted with EACH batch.

5. Stir sample well, then weigh approximately 20 grams of sample into tared beaker. Record weight to the nearest 0.1 gram in the technician's notebook.

6. Unless otherwise specified, blank sand will serve as the method blank, spike, and spike duplicate. For each blank and spike, weigh approximately 20 grams of blank sand into tared beaker and record weight.

7. Adjust pH of samples, blank, and spikes to <2 (dark pink) with 1+1 HCl. Test pH by touching pH paper to solid sample. Add more HCl as needed.

8. Using a volumetric pipette, add 2.0 mLs of the appropriate spiking solution to spike samples only. Record spike number and amount added.

9. Dry each sample, blank, and spike by adding approximately 15 grams $MgSO_4$ and immediately mix sample well to avoid lumps or hardening. The dried sample should have a sandy texture at this point. Add more $MgSO_4$ if necessary.

10. Using scoopula, quantitatively transfer sample from beaker into glass soxhelet thimble.

11. Prepare a filter by placing fluted filter paper in a glass powder

Copy to DN 6/29/90

funnel. Place funnel on top of 250 mL flat bottom flask.

12. Using a freon wash bottle, rinse any leftover solids from beaker and scoopula into filter funnel. Rinse filter with additional freon and let drain into flask. Remove funnel.

> IMPORTANT: Always use pure freon (not redistilled) for IR samples. Redistilled freon may be used for the gravimetry procedure only.

13. Add 150 mLs of freon and approximately 5 glass boiling beads to each 250 mL flask.

14. Use tongs to carefully slide thimble into soxhelet apparatus (do not touch thimble with gloves). Attach labeled flasks, taking care to match thimble contents to proper flask.

15. Turn on cooling water for condensing columns, and hot plates on to setting #3. Extract in soxhelet apparatus for 4 hours. When finished, allow extracts to cool to room temperature.

16. IF extract will be analyzed for petroleum hydrocarbons ONLY, add approximately 6 grams of silica gel to flask, and swirl to mix for about 1 minute. DO NOT add silica gel to samples being analyzed for oil and grease.

> If PHC samples are highly colored, add as much silica gel as needed to remove color, or until silica added remains white.

17. Prepare a second filter funnel by placing fluted filter paper in a glass powder funnel and filling to a depth of several cm with sodium sulfate. Rinse the funnel and contents 3 times with 10-15 mLs of freon and let drain into freon waste container. Drain well between rinses.

18. If extract will be analyzed by gravimetry, place filter funnel on top of tared, pre-prepped gravimetry flask. If extract will be analyzed by IR, place funnel on top of 200 mL volumetric flask.

19. Filter extract through filter funnel. Use a wash bottle to rinse the 250 mL flask 3 times with freon and decant rinses through funnel. Rinse the filter with an additional 15-30 mLs of freon and let drain.

> Adjust final volume of samples to be analyzed by IR to 200 mL mark with freon, stopper volumetric flask, and tilt to mix.

20. After draining, dump filters onto a tray covered with paper towels and let dry under a hood. Discard when dry.

21. Analyze extracts by IR spectroscopy or gravimetry.

PART 2 - ANALYSIS

A. GRAVIMETRY

1. Prepare 250 mL flat bottom gravimetry flasks as follows

   a. Wash in hot soapy water.

   b. Rinse 3 times with tap water, then 3 times with DI water.

   c. VERY IMPORTANT: Following DI rinses, handle flasks with tongs ONLY - do not touch them!

   d. Solvent rinse flasks with MeOH, then MeCl2.

   e. Bake flasks at 100 degrees C for 1 hour. Allow to cool.

   f. Place in dessicator for 24 hours.

2. Weigh each clean flask on the analytical balance, then tip flask upside down for approximately 1 minute, and re-weigh. Continue to tip and re-weigh flasks until a constant weight is reached.

3. Record flask tare weight to the nearest 0.0001 gram in the technician's notebook. Use etched numbers to identify flasks.

4. Filter extracts into tared flasks as in steps 18 & 19 (Part 1, above). In technician's notebook, record sample number corresponding to each flask.

5. Using tongs, transfer flasks to hot plates and heat at setting #4 until freon has evaporated completely.

6. Place flasks tipped on their sides on paper towels for 1/2 hour, then place in sealed dessicator for 24 hours.

7. Weigh flasks on analytical balance as in step 2 (above) and record gross weights to the nearest 0.0001 gram.

8. Subtract tare weight from gross weight and record sample residue weight in milligrams (residue x 1000).

9. Calculate and report results for oil and grease in ug/g. Refer to Section 3 for calculation procedure.

B. INFRARED SPECTROSCOPY

1. Refer to Perkin Elmer Model 1420 Recording Infrared Spectrophotometer manual for operating instructions.

2. Operate IR at the following settings:

   Slit program 3
   Chart expansion 1
   Baseline offset 93
   Scan from 3400 to 2600 wavenumbers (cm )
   Nitrogen purge - ON

3. Using a Kimwipe, clean two matched 5 cm IR cells to remove any cloudiness or fingerprints on external surfaces.

4. Prior to analyzing samples, check instrument operation by scanning a freon/freon blank as follows:

a. Fill both IR cells with clean freon.

b. Place one cell in the path of the sample beam (sample holder closer to operator), and one in the path of the reference beam (sample holder away from operator).

c. Scan as specified above. No visible bands should be observed.

5. Check continuing calibration and instrument reproducibilty as follows:

a. Prepare a fresh 50 ug/mL Oil and Grease standard in freon from a dilution of Oil and Grease STOCK standard.

b. Remove IR cell from sample beam position and replace the freon in the cell with the 50 ug/mL standard. Return IR cell to sample holder.

c. Scan the standard twice and calculate results. Refer to Section 3 for calculation procedure. Refer to Section 5 for QA/QC requirements.

d. If continuing calibration % error is < 20% and duplicate standards agree within 50-150%, proceed to analysis of extraction blank.

6. Scan extraction blank and calculate result. If result falls below minimum detection limit for this procedure (MDL = 60 ug/g), proceed to sample analysis.

7. Scan samples, then calculate and report results. Refer to Section 3 for calculation procedure.

IR cell must be thoroughly rinsed with freon between samples.

## PART 3 - CALCULATIONS

### A. GRAVIMETRY CALCULATIONS

1. Sample results are reported on a dry weight basis whenever possible. Look up percent dry weight figure for each sample number and calculate dry weight for extracted sample as follows:

Calculated dry weight = sample weight x sample percent dry

2. Calculate O&G or PHC result for samples and blanks in ug/g as follows:

$$\text{Oil \& Grease (or PHC) ug/g} = \frac{\text{mg residue}}{\text{calculated dry weight (g)}} \times 1000$$

NOTE: Round final results to 2 significant figures.

3. Calculate Percent recovery for spikes as follows:

a. First calculate total amount of spike added (ug/g)

$$\frac{\text{spike conc. (ug/mL)} \times \text{\# mLs added}}{\text{calculated sample dry weight (g)}} = \text{ug/g added}$$

b. Then calculate % recovery

$$\frac{\text{spike result (ug/g)}}{\text{ug/g added}} \times 100 = \text{\% recovered}$$

c. IF actual sample was used for matrix spike instead of clean sand, spike result must first be corrected for sample results as follows:

$$\frac{\text{spike result (ug/g)} - \text{sample result (ug/g)}}{\text{ug/g added}} \times 100 = \text{\% recovered}$$

B. IR ANALYSIS CALCULATIONS

1. Calculate sample absorbance to 3 significant figures by doing peak analysis of IR spectrum (see attached example).

$$\text{Absorbance} = \text{Log} \frac{1}{(\text{Peak}) + (1 - \text{baseline})}$$

2. Read sample concentration (R-value) from most recent O&G / PHC Calibration Curve of Absorbance vs. Concentration. Record result to 3 significant figures.

3. If sample absorbance is greater than the highest standard of the calibration curve range, sample must be diluted such that absorbance falls between the highest and lowest standards of the curve. Use a volumetric flask and syringe to perform exact dilution. Record dilution in technician's notebook.

4. Sample results are reported on a dry weight basis whenever possible. Calculate sample dry weight as for gravimetric analysis.

5. Calculate O&G or PHC results for samples and blanks in ug/g as follows:

$$\text{Oil \& Grease = or PHC (ug/g)} = \frac{\text{R-value (3 sig figs) in ug/mL} \times \text{extract final volume in mLs} \times \text{dilution factor}}{\text{Calculated dry weight (g)}}$$

NOTE: Round final results to 2 significant figures.

6. Calculate spike % recoveries as for gravimetric analysis.

PART 4 - PREPARATION OF CALIBRATION CURVE

1. Prepare Oil & Grease STOCK standard for IR as follows:

   a. Freon rinse a 100 mL volumetric flask.

   b. Assign standard a number and record preparation data in standards log book.

   c. Using a 250 uL syringe, add the following standards ( > 98% purity) to the flask:

      187 uL hexadecane
      188 uL iso-octane
      125 uL chlorobenzene

   d. Dilute to 100 mL volume with freon [Final conc. = 5000 ug/mL].

   e. Store stock standard in refrigerator, and label with expiration date. Shelf life = 6 months.

2. Prepare 5 calibration standards from dilutions of the O&G stock standard. Standards should be prepared at the following levels: 10, 25, 50, 75, and 100 ug/mL. Prepare 50 mLs of each standard as follows:

| Cal Standard Conc. [ug/mL] | uL stock added to 50 mLs FV |
|---|---|
| 10 | 100 |
| 25 | 250 |
| 50 | 500 |
| 75 | 750 |
| 100 | 1000 |

3. Analyze individual calibration standards by IR. Calculate IR absorbance at each standard concentration by peak analysis (refer to IR calculations section).

4. Using a scientific calculator with a linear regression program, enter each pair of absorbance vs. concentration values (enter absorbance as y value, concentration as x value). The linear regression function will generate the best fitting line through the

data points.

Refer to appropriate manual or handbook for data entry and storage instructions.

5. Determine the slope, intercept, and linear correlation coefficient of the calibration curve data. Correlation coefficient should approach 0.999.

6. Choose 2 or 3 theoretical absorbance values, and enter them into the linear regression program to determine corresponding concentration values. Plot absorbance vs. concentration for these theoretical data points, and draw a line through them. This line is your calibration curve. See attached example.

7. Plot absorbance vs. concentration data points for the actual calibration standards on the cal curve. This provides a visual confirmation of linearity. Date calibration curve and store in IR QC logbook.

8. Record calibration curve slope (IRM) and intercept values (IRB) in LABSAM under auxiliary file entry (AFSENT) as follows:

File name - $CALIB
Name of factor - IRM (or IRB)
Enter "M" for modify
Enter new calibration factor

PART 5 - QA/QC REQUIREMENTS

1. Extraction blanks

If result does not fall below minimum detection limit for procedure, blank and associated samples must be re-extracted and re-analyzed.

MDL = 60 ug/g (IR), 250 ug/g (Gravimetry)

2. Matrix spike and matrix spike duplicate

a. Calculate and report the Relative Percent Difference (RPD) between matrix spike and matrix spike duplicate as follows:

$$RPD = \frac{D1 - D2}{(D1 + D2) / 2} \times 100$$

Where D1 = 1st spike value, and D2 = 2nd spike value. Acceptable RPD limit is 50-150%.

b. Acceptable recoveries for individual spikes are 50-150% of true value. Spikes falling outside of these limits, and associated samples, must be re-extracted.

3. Continuing calibration % error

a. Calculate % error for 50 ug/mL standard as follows:

$$\% \text{ error} = \frac{\text{actual standard result} - \text{theoretical result}}{\text{theoretical standard result}} \times 100$$

b. A new calibration curve must be prepared when the % error for the mid point standard is >= 20 %. Record % error values in IR QC logbook.

4. Polystyrene film

Scan polystyrene film sample by IR at least once weekly and compare result to expected result in IR manual to ensure the instrument is working properly.

5. Detection Limits

Minimum detection limits may need to be raised if sample volume is limited, i.e. if only 10 grams of solid sample is available for extraction instead of 20 grams, MDL is raised by a factor of 2.

PART 6 - SPIKE PREPARATION

1. Spikes are prepared as follows:

a. Freon rinse a 100 mL volumetric flask for each spike. Assign an individual spike number and record in standards logbook.

b. Using an analytical balance, weigh the following standard quantities into flask:

| Oil and Grease Spike | | Petroleum Hydrocarbon Spike |
|---|---|---|
| Diesel fuel | 0.25 g | Diesel fuel 0.50 g |
| Corn oil | 0.25 g | |

c. Record weights to the nearest 0.0001 gram and record in standards logbook.

d. Dilute to 100 mL final volume in freon. Calculate and record exact concentration in ug/mL (approximately 5000 ug/mL for each spike solution). Label with 6 month expiration date.

2. Add 2.0 mLs of the appropriate spike solution to spike samples.

Method References

O & G, PHC Soxhelet by IR - EPA 418.1 Mod., SM 503B, D, E
O & G, PHC Soxhelet by Gravimetry - EPA 418.1 Mod., SM 503A, D, E

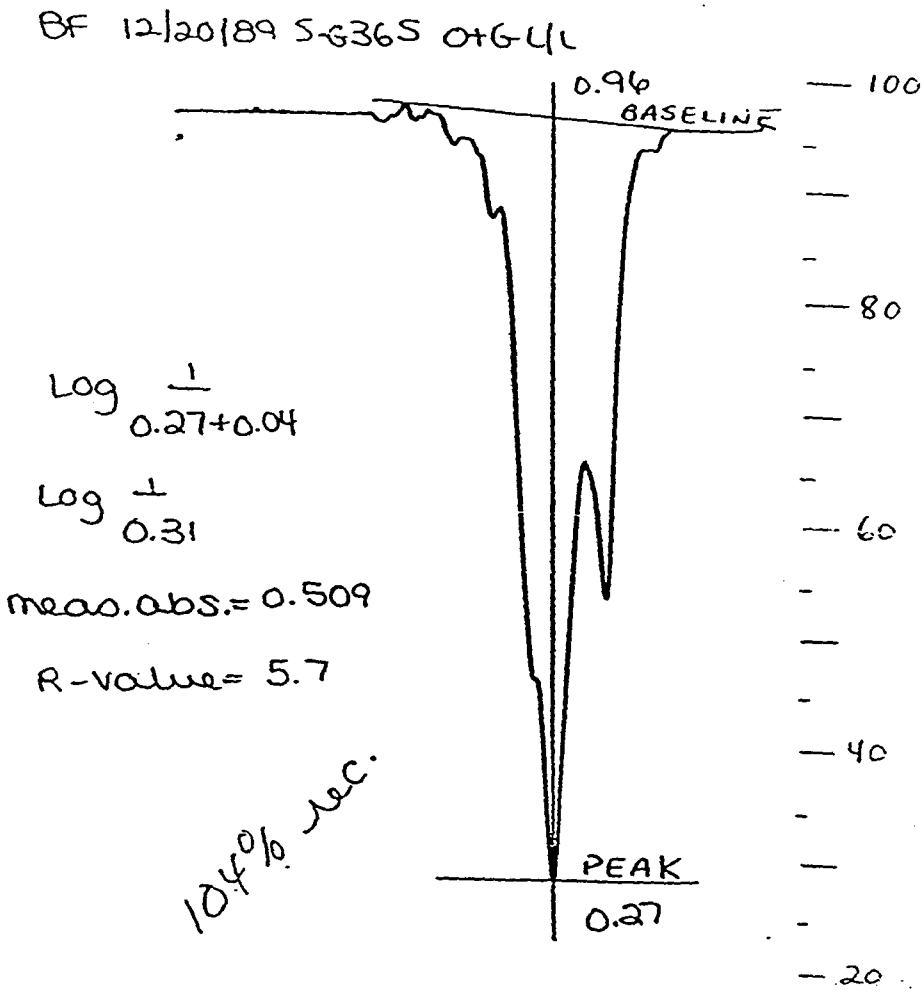


Example 1. Calculation of IR absorbance by peak analysis.

CALIBRATION CURVE

Absorbance vs. Concentration
Oil & Grease / PHC

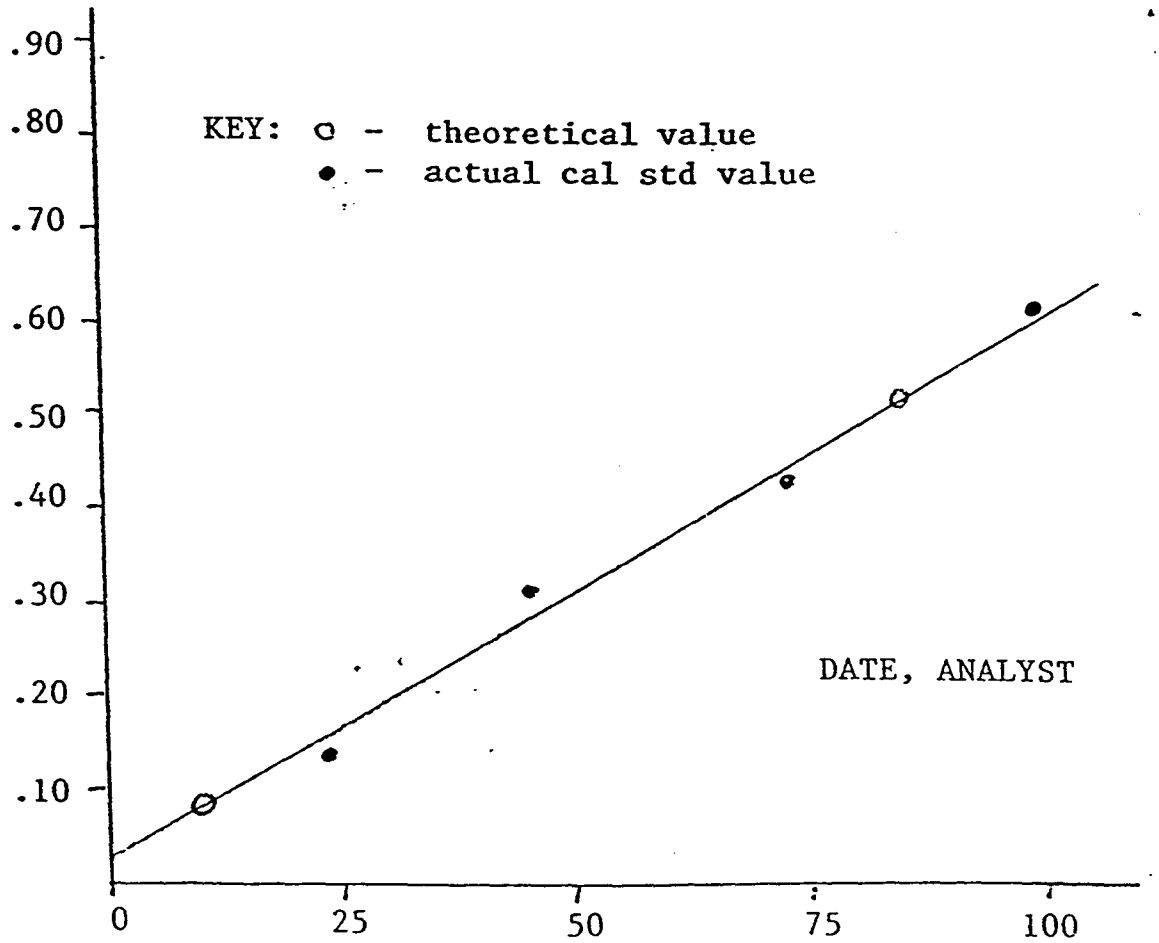


O & G / PHC CONCENTRATION
in ug/mL

# Appendix E

## Ceimic Corp. Quality Assurance Plan

CEIMIC CORPORATION

10 Dean Knauss Drive

Narragansett, Rhode Island 02882

# QUALITY ASSURANCE PLAN

Approved by:

Organic Laboratory Manager

Inorganic Laboratory Manager

QA/QC Director

President

Revision No. 2
Date: January 1991

## 2.0 Table of Contents

| Section | | Page |
|---|---|---|
| 1.0 | Title Page | 1-1 |
| 2.0 | Table of Contents | 2-1 |
| 3.0 | Introduction | 3-1 |
| 4.0 | Quality Assurance Policy Statement | 4-1 |
| 5.0 | Quality Assurance Management, Organization and Responsibility | 5-1 |
| 6.0 | Quality Assurance Objectives for Measurement Data in Terms of Precision, Accuracy, Representativeness, Completeness and Comparability | 6-1 |
| | 6.1 Precision and Accuracy | 6-2 |
| | 6.2 Representativeness | 6-2 |
| | 6.3 Completeness | 6-3 |
| | 6.4 Comparability | 6-3 |
| 7.0 | Sampling Procedures | 7-1 |

## 2.0 Table of Contents

| Section | | Page |
|---|---|---|
| 8.0 | Sample Custody | 8-1 |
| | 8.1 Chain of Custody | 8-1 |
| | 8.2 Laboratory Security | 8-3 |
| | 8.3 Duties and Responsibilities of Sample Custodian | 8-3 |
| | 8.4 Sample Receipt | 8-8 |
| | 8.5 Sample Identification and Log-in | 8-9 |
| | 8.6 Sample Storage | 8-14 |
| 9.0 | Calibration Procedures and Frequency | 9-1 |
| | 9.1 Instruments | 9-1 |
| | 9.2 Standards and Reagents | 9-3 |
| 10.0 | Analytical Procedures | 10-1 |
| 11.0 | Data Reduction, Validation and Reporting | 11-1 |
| | 11.1 Data Reduction | 11-1 |
| | 11.2 Data Validation | 11-1 |
| | 11.3 Data Reporting | 11-2 |
| 12.0 | Laboratory Quality Control Checks | 12-1 |

## 2.0 Table of Contents (cont'd)

| | Section | Page |
|---|---|---|
| 13.0 | Quality Assurance Systems Audits, Performance Audits, and Frequency..... | 13-1 |
| | 13.1 Systems Audits..... | 13-1 |
| | 13.2 Performance Audits..... | 13-2 |
| 14.0 | Preventive Maintenance..... | 14-1 |
| 15.0 | Specific Routine Procedures Used to Assess Data Precision, Accuracy and Completeness.. | 15-1 |
| | 15.1 Precision..... | 15-1 |
| | 15.2 Accuracy..... | 15-2 |
| | 15.3 Completeness..... | 15-2 |
| 16.0 | Corrective Action..... | 16-1 |
| 17.0 | Quality Assurance Reports to Management.... | 17-1 |
| 18.0 | Facilities and Instrumentation..... | 18-1 |
| Appendices | | |
| | Appendix A - Personnel Qualification and Resumes..... | A-1 |

## 2.0 Table of Contents (cont'd.)

**List of Figures** **Page**

Figure 4-1 Quality Assurance Policy Statement.... 4-3

Figure 5-1 Ceimic Organizational Chart..... 5-4

Figure 8.1-1 Chain-of-Custody Record..... 8-2

Figure 8.1-2 Sample Control Record..... 8-4

Figure 8.4-1 Sample Receipt Form..... 8-7

Figure 8.5-1 Sample Information Form..... 8-11

Figure 8.6-1 Temperature Log..... 8-15

Figure 11-1 Data Reporting Process..... 11-4

Figure 13.1-1 Audit Outline..... 13-3

Figure 14-1 GC/MS Routine Instrument Maintenance for Semi-volatiles..... 14-2

Figure 14-2 GC/MS Non-routine Instrument Maintenance..... 14-3

Figure 16-1 Ceimic Quality Assurance Corrective Request Form..... 16-4

Figure 18-1 Facilities Diagram..... 18-5

**List of Tables**

Table 7-1 Recommended Methods for Sampling and Preservation of Samples for Analysis.. 7-2

Table 10-1 Inorganic Analytical Methods Summary.. 10-2

Table 10-2 Organic Analytical Methods Summary.... 10-5

Table 13.2-1 Ceimic Performance Evaluations..... 13-4

## 3.0 Introduction

The Ceimic Corporation is an environmental testing and research laboratory, incorporated in the State of Delaware (1988). The laboratory provides a wide range of analytical services, covering soil, air and water pollution, environmental impact assessment, industrial prosess control, effluent and emission pollution control, and research and development for hazardous waste management. These services are provided to various U.S Government and State agencies and to private industries as well.

The following Quality Assurance (QA) Plan describes the policies, organization, objectives, quality control activities, and specific quality assurance functions employed at Ceimic, and demonstrates Ceimic's dedication to producing accurate, consistant data of known quality. The QA Plan follows the "Interim Guidelines and Specifications for Preparing Quality Assurance Plans" published by the USEPA, December, 1980.

## 4.0 Quality Assurance Policy Statement

Ceimic Corporation is firmly committed to the production of valid data of known quality through the use of analytical measurements that are accurate, reliable, and complete. To ensure the production of such data, Ceimic has developed an extensive Quality Assurance/Quality Control (QA/QC) Program that operates throughout the entire organization.

Quality Control is defined as an organized system of activities whose purpose is to provide quality data, while Quality Assurance is more broadly defined as a system of activities designed to ensure that the quality control program is actually effective. Quality Control is included as part of Quality Assurance. In supporting government regulatory and enforcement proceedings, a high degree of attention to quality is essential. Intense application of quality control principles and routine quality assurance audits are required. The basic components of Ceimic's QA/QC Program are control, evaluation and correction.

Control ensures the proper functioning of analytical systems through the implementation of an orderly and well-planned series of positive measures taken prior to and during the course of analysis including quality control practices, training or personnel, routine maintenance and calibration of instruments, and frequent validation of standards.

Evaluation involves the assessment of data generated during the control process. For example, precision and accuracy are determined from the results of duplicates and spikes, and other check samples. Evaluation measures over the long-term include performance and systems audits conducted by the Ceimic quality assurance group as well as outside regulatory agencies.

Correction includes the investigation, diagnosis and solution of any problem detected in an analytical system. Proper functioning of the system may be restored through method re-evaluation, analysis of additional check samples, trouble-shooting and repair of instrumentation or examination and comparison with historical data. Confidential records are maintained of corrective actions taken.

The management at Ceimic considers Quality Assurance/Quality Control to be of paramount importance in the success of the company and fully supports the staff in the implementation of a sound and thorough Quality Assurance Program. Our Ceimic Quality Assurance Policy Statement is included as Figure 4-1.

**Figure 4-1**
**Quality Assurance Policy Statement**
**Ceimic Corporation**
**January 1991**

The success of our laboratories is directly related to client perception of the reliability and accuracy of the data we generate. From the moment an environmental sample arrives in our laboratory, each step it passes through in sample management, preparation, analysis and reporting will affect data reliability and accuracy. Thus, Quality Assurance and Control procedures have been imposed at each step and operation in our laboratory to ensure our clients' satisfaction. Ceimic is firmly committed to the effective implementation of these procedures.

It is incumbent on every employee at all operations and management levels to thoroughly understand and carry out said procedures.

Our Quality Assurance and Quality Control Program is the key to our success and, as a company policy, will be strictly enforced. The Director of Quality Assurance will direct and oversee this function, but we are all individually responsible for its execution.

John F. McGarry, Jr.
President
Ceimic Corporation

## 5.0 Quality Assurance Management, Organization & Responsibility

Quality Assurance at Ceimic is a company-wide function that depends on cooperative working relationships and multi-level review. Responsibilities for QA/QC functions begin with the bench scientist and extend to the President of Ceimic.

The primary level of quality assurance resides with the bench scientist, who, after matriculation in the Ceimic training program, is responsible for: 1) precisely following the analytical methods and Standard Operating Procedures (SOP) 2) carefully documenting each step in the appropriate format, 3) conscientiously obtaining peer review as required, and 4) promptly alerting laboratory managers and/or QA staff members to problems or anomalies.

The manager of each analytical laboratory is responsible for the quality of the data generated by the scientists in that laboratory. The laboratory manager implements and monitors the specific QC protocols and QA programs within the laboratory to ensure a continuous flow of high quality data. It is the laboratory manager's responsibility to provide the bench chemists with ample resources including space, equipment, personnel and, especially, time, in order to accomplish top quality performance. Additionally, each laboratory has a scientist specifically designated to assist the laboratory manager with the QA function.

Their responsibilities may include monitoring QC practices, updating laboratory SOPs, and helping to manage analysis of Performance Evaluation samples. These scientists are part of

Ceimic's QA staff and are important QA links to the laboratories. The overall Quality Assurance Program and associated activities are directed by the Director of Quality Assurance. While interacting on a daily basis with laboratory staff members, the QA Director remains independent of the laboratories and reports directly to the President of Ceimic. Laboratory compliance with the QA program is evaluated through informal and formal systems and performance audits by the QA Director. Remedial action is suggested if necessary.

With input from the appropriate staff members, the Director of Quality Assurance writes and edits general and specific QA plans, QC protocols, safety procedures, and Standard Operating Procedures. An essential element of the QA program is keeping records and archiving all information pertaining to quality assurance including QA/QC data, pre-award check sample results and scores, performance evaluation sample results and scores, state certifications of the laboratories, EPA and other audit comments, recommendations and reports. The QA Director also plays an important role in the corrective action mechanism described in Section 16.

A semi-official QA function performed by the Director involves working with scientists and management to continually upgrade procedures and systems to make the laboratory work easier, rather than more difficult.

Ultimately, the success of the QA Program depends on the cooperation and support of the entire organization. Ceimic's most valuable resource is its staff of dedicated professionals who take personal pride in the quality of their performance.

**Figure 5-1**
**Ceimic Organizational Chart**

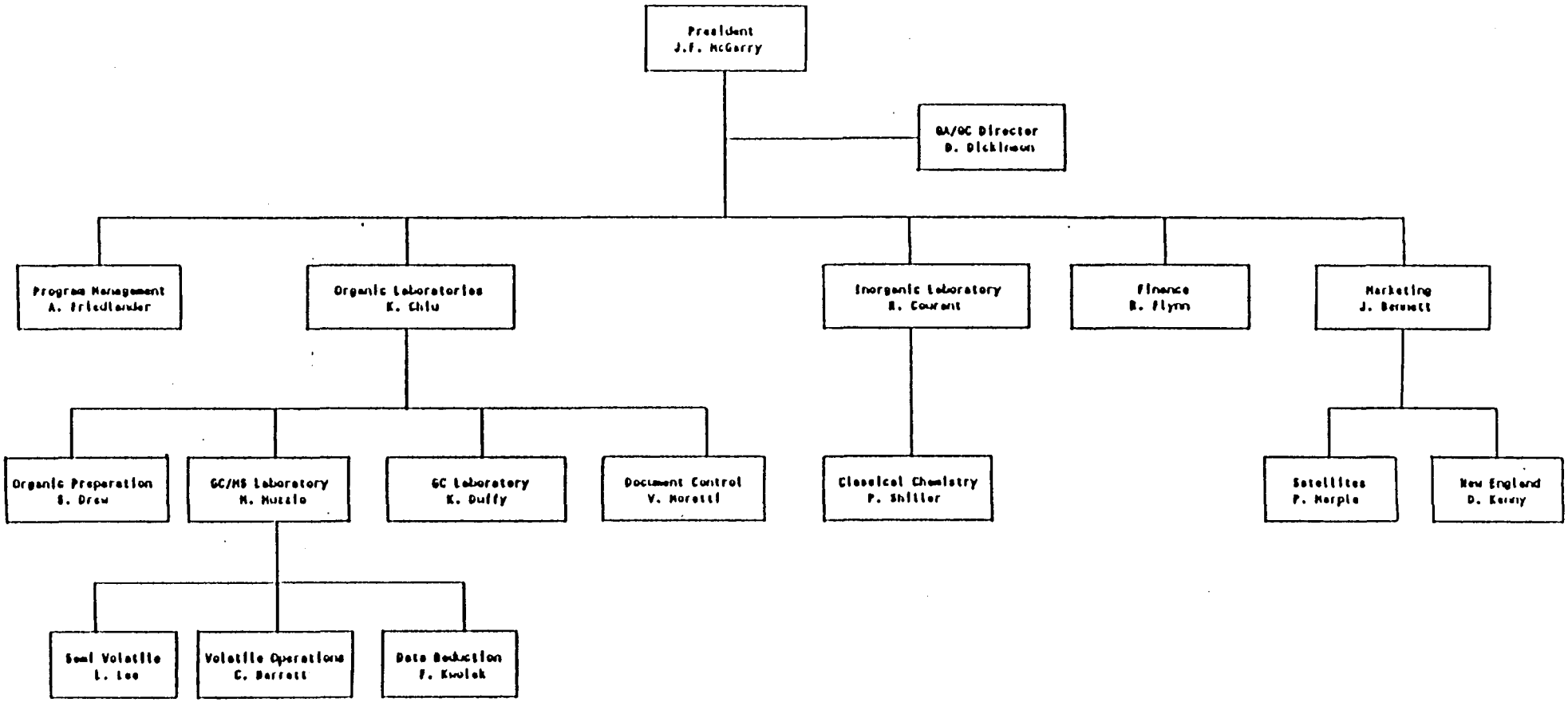


CEIMIC CORPORATION ORGANIZATION CHART

## 6.0 Quality Assurance Objectives for Measurement of Data in Terms of Precision, Accuracy, Representativeness, Completeness and Comparability

As part of the evaluation component of the QA Program, laboratory results are compared with certain data quality objectives. These objectives, in terms of precision, accuracy, representativeness, completeness and comparability, may be defined as follows:

- Precision - the agreement or reproducibility among individual measurements of the same property, usually made under the same conditions.
- Accuracy - the degree of agreement of a measurement with the true or accepted value.
- Representativeness - the degree to which data accurately and precisely represent a characteristic of a population, parameter variations at a sampling point, a process condition, or an environmental condition.
- Completeness - a measure of the amount of valid data obtained from a measurement system compared with the amount that was expected to be obtained under correct normal conditions.
- Comparability - an expression of the confidence with which one data set can be compared with another data set in regard to the same property.

Quality Assurance objectives vary according to the specific project and the parameters requested. The accuracy, precision, and representativeness of data will be functions of the origins of the samples, the procedures used to analyze samples and generate data, and the specific sample matrices involved in each project. Quality control practices utilized in the evaluation of these data quality objectives include blanks, replicates, spikes, standards, check samples, calibrations and recoveries.

### 6.1 Precision and Accuracy

For each parameter analyzed, the QA objectives for precision and accuracy will be determined from 1) published historical data; 2) method validation studies; 3) Ceimic experience with similar samples and/or 4) project specific requirements, such as those stipulated by the USEPA in the Contract Laboratory Program (CLP) protocols.

### 6.2 Representativeness

The representativeness of the data from the sampling sites depends on the sampling procedures. The representativeness of the analytical data is a function of the procedures used in processing the samples. The objective for representativeness is to provide data of the same high quality as other analyses of similar samples using the same methods during the same time period within the laboratory. Representativeness can be determined for

this objective by a comparison of the quality control data for these samples against other data for similar samples analyzed at the same times. Differences within 20% are acceptable.

### 6.3 Completeness

Completeness of an analysis is documented by including in the report sufficient information to allow the data user to assess the quality of the results. The objective is for completeness to be 100% in most cases and includes: analysis of all samples; generation and analysis of all required QC samples; sufficient documentation of associated calibration, tuning, and standardization; and records of data reduction processes. Completeness is ensured by assigning to each project a specific project manager whose functions include sample management and tracking.

### 6.4 Comparability

The results of these analyses can be compared with other analyses by other laboratories, because the objectives of the laboratory for comparability are: to demonstrate traceability of standards to NBS or EPA sources; to use standard methodology; to apply appropriate levels of quality control within the context of the Laboratory Quality Assurance Program; and to participate in interlaboratory studies to document laboratory performance.

By using traceable standards and standard methods, the analytical results can be compared to other laboratories operating similarly. The QA Program documents internal performance, and the interlaboratory studies document performance compared to other analysts at other locations.

## 7.0 Sampling Procedures

For most projects, outside sampling teams deliver or send samples to the Ceimic laboratories. When sampling by Ceimic personnel is required, the Ceimic sampling team follows the sampling procedures outlined in the EPA/OSW "Test Methods for Evaluating Solid Wastes, Physical/Chemical Methods," SW 846, 3rd Edition, or procedures found in the EPA "Handbook for Sampling and Sample Preservation of Water and Wastewater." Safety during the sampling process is discussed in the Ceimic document "Safety Procedures for Sampling Personnel." Site specific sampling plans are prepared at Ceimic for projects requiring them.

Appropriately prepared sample containers are supplied by Ceimic if a client so requests. When required, preservatives are added to the sample containers by Ceimic scientists. Table 7-1 provides the Ceimic Recommended Methods for Sampling and Preservation of Samples for Analysis. Maximum holding times, as specified in 40 CFR, Part 136, are included in the table.

TABLE 7.[1] REQUIRED CONTAINERS, PRESERVATION TECHNIQUES, AND HOLDING TIMES

| Parameter No./Name | Container[1] | Preservation[2,3] | Maximum Holding Time[4] |
|---|---|---|---|
| Table 1A-Bacterial Tests: | | | |
| 1-4. Coliform, fecal & total | P,G | Cool, 4°C, 0.008% $Na_2S_2O_3$ [5] | 6 hours. |
| 5. Fecal streptococci | P,G | do | Do. |
| Table 1B-Inorganic Tests: | | | |
| 1. Acidity | P,G | Cool, 4°C | 14 days. |
| 2. Alkalinity | P,G | do | Do. |
| 4. Ammonia | P,G | Cool, 4°C, $H_2SO_4$ to pH<2 | 28 days. |
| 9. Biochemical oxygen demand | P,G | Cool, 4°C | 48 hours. |
| 11. Bromide | P,G | None required | 28 days. |
| 14. Biochemical oxygen demand, carbonaceous | P,G | Cool, 4°C | 48 hours. |
| 15. Chemical oxygen demand | P,G | Cool, 4°C, $H_2SO_4$ to pH<2 | 28 days. |
| 16. Chloride | P,G | None required | Do. |
| 17. Chlorine, total residual | P,G | do | Analyze immed. |
| 21. Color | P,G | Cool, 4°C | 48 hours. |
| 23-24. Cyanide, total & amenable to chlorination | P,G | Cool, 4°C, NaOH to pH>12, 0.6g ascorbic acid[5] | 14 days.[6] |
| 25. Fluoride | P | None required | 28 days. |
| 27. Hardness | P,G | $HNO_3$ to pH<2, $H_2SO_4$ to pH<2 | 6 months. |
| 28. Hydrogen ion (pH) | P,G | None required | Analyze immed. |
| 31, 43. Kjeldahl & organic nitrogen | P,G | Cool, 4°C, $H_2SO_4$ to pH<2 | 28 days. |
| Metals:[7] | | | |
| 18. Chromium VI | P,G | Cool, 4°C | 24 hours. |
| 35. Mercury | P,G | $HNO_3$ to pH<2 | 28 days. |
| 3, 5-8, 10, 12, 13, 19, 20, 22, 26, 29, 30, 32-34, 36, 37, 45, 47, 51, 52, 58-60, 62, 63, 70-72, 74, 75. Metals, except chromium VI & mercury | P,G | do | 6 months. |

TABLE 7.1 REQUIRED CONTAINERS, PRESERVATION TECHNIQUES, AND HOLDING TIMES

| Parameter No./Name | Container[1] | Preservation[2,3] | Maximum Holding Time[4] |
|---|---|---|---|
| Metals:[7] (continued) | | | |
| 38. Nitrate | P,G | Cool, 4°C | 48 hours. |
| 39. Nitrate-nitrite | P,G | Cool, 4°C, $H_2SO_4$ to pH<2 | 28 days. |
| 40. Nitrite | P,G | Cool, 4°C | 48 hours. |
| 41. Oil & grease | G | Cool, 4°C, $H_2SO_4$ to pH<2 | 28 days. |
| 42. Organic carbon | P,G | Cool, 4°C, HCL or $H_2SO_4$ to pH<2 | Do. |
| 44. Orthophosphate | P,G | Filter immediately, Cool, 4°C | 48 hours. |
| 46. Oxygen, Dissolved Probe | G Bottle & Top | None required | Analyze immed. |
| 47. Winkler | do | Fix on site & store in dark | 8 hours. |
| 48. Phenols | G only | Cool, 4°C, $H_2SO_4$ to pH<2 | 28 days. |
| 49. Phosphorus (elemental) | G | Cool, 4°C | 48 hours. |
| 50. Phosphorus, total | P,G | Cool, 4°C, $H_2SO_4$ to pH<2 | 28 days. |
| 53. Residue, total | P,G | Cool, 4°C | 7 days. |
| 54. Residue, Filterable | P,G | do | 48 hours. |
| 55. Residue, Nonfilterable (TSS) | P,G | do | 7 days. |
| 56. Residue, Settleable | P,G | do | 7 days. |
| 57. Residue, volatile | P,G | do | 7 days. |
| 61. Silica | P | do | 28 days. |
| 64. Specific conductance | P,G | do | Do. |
| 65. Sulfate | P,G | do | Do. |
| 66. Sulfide | P,G | Cool, add zinc acetate plus sodium hydroxide to pH>9. | 7 days. |
| 67. Sulfite | P,G | None required | Analyze immed. |
| 68. Surfactants | P,G | Cool, 4°C | 48 hours. |
| 69. Temperature | P,G | None required | Analyze. |
| 73. Turbidity | P,G | Cool, 4°C | 48 hours. |
| Table IC-Organic Tests.[8] | | | |
| 13, 18-20, 22, 24-28, 34-37, 39-43, 45-47, 56, 66, 88, 89, 92-95, 97. Purgeable Halocarbons. | G, Telflon-lined septum | Cool, 4°C, 0.008% $Na_2S_2O_3$[5] | 14 days. |

TABLE 7.1REQUIRED CONTAINERS, PRESERVATION TECHNIQUES, AND HOLDING TIMES

| Parameter No./Name | 1 Container | 2.3 Preservation | Maximum 4 Holding Time |
|---|---|---|---|
| Table IC-Organic Tests.[8] (continued) | | | |
| 6, 57, 90. Purgeable aromatic hydrocarbons | do | Cool, 4°C, 0.008% $Na_2S_2O_3$ [5], HCL to pH2[9] | Do. |
| 3, 4, Acrolein & acrylonitrile | do | Cool, 4°C, 0.008% $Na_2S_2O_3$ [5], Adjust pH to 4-5[10] | Do. |
| 23, 30, 44, 49, 53, 67, 70, 71, 83, 85, 96. Phenols[11] | G,Teflon-lined cap | Cool, 4°C, 0.008% $Na_2S_2O_3$ [5] | 7 days until extraction, 40 days after extraction. |
| 7, 38, Benzidines[11] | do | do | 7 days until extraction, |
| 14, 17, 48, 50-52. Phthalate esters[11] | do | Cool, 4°C | 40 days after extraction. |
| 72-74. Nitrosamines[11,14] | do | Cool 4°C, store in dark,0.008% $Na_2S_2O_3$ [5] | Do. |
| 76-82. PCBs[11] acrylonitrile | do | Cool, 4°C | Do. |
| 54, 55, 65, 69, Nitroaromatics & isophorone[11]. | do | Cool 4°C, store in dark,0.008% $Na_2S_2O_3$ [5] | Do. |
| 1, 2, 5, 8-12, 32, 33, 58, 59, 64, 68, 84, 86. Polynuclear aromatic hydrocarbons[11]. | do | do | Do. |
| 15, 16, 21, 31, 75. Haloethers[11] | do | Cool 4°C, 0.008% $Na_2S_2O_3$ [5] | Do. |
| 29, 35-37, 60-63, 9f. Chlorinated hydrocarbons[11] | do | Cool, 4°C | Do. |
| 87. TCDD[11] | do | Cool 4°C, 0.008% $Na_2S_2O_3$ [5] | Do. |
| Table 1D-Pesticides Tests: | | | |
| 1-70. Pesticides[11] | do | Cool, 4°C, pH 5-9[15] | Do. |
| Table 1E-Radiological Tests: | | | |
| 1-5. Alpha, beta & radium | P,G | $HNO_3$ to pH<2 | 6 months. |

TABLE 7.1 REQUIRED CONTAINERS, PRESERVATION TECHNIQUES, AND HOLDING TIMES

---

TABLE II NOTES

1. Polyethylene (P) or Glass (G).

2. Sample preservation should be performed immediately upon sample collection. For composite chemical samples each aliqout should be preserved at the time of collection. When use of automated sampler makes it impossible to preserve each aliqout, then chemical samples may be preserved by maintaining at $4^{o}C$ until compositing and sample splitting is completed.

3. When any sample is to shipped by common carrier or sent through the US Mails, it must comply with the Department of Transportation Hazardous Materials Regulations (49 CFR Part 172). The person offering such material for transportation is responsible for ensuring such compliance. For the preservation requirements of Table II, the Office of Hazardous Materials, Materials Transportation Bureau, Department of Transportation has determined that the Hazardous Meterials Regulations do not apply to the following materials: Hydrochloric acid (HCL) in water solutions at concentrations of 0.04% by weight or less (pH about 1.96 or greater); Nitric acid ($HNO_3$) in water solutions at concentrations of 0.15% by weight or less (pH about 1.62 or greater); Sulfuric acid ($H_2SO_4$) in water solutions of 0.35% by weight or less (pH about 1.15 or greater); and Sodium hydroxide (NaOH) in water solutions at concentrations of 0.080% by weight or less (pH about 12.30 or less).

4. Samples should be analyzed as soon as possible after collection. The times listed are the maximum times that samples may be held before analysis and still be considered valid. Samples may be held for longer periods only if the permittee, or monitoring laboratory has data on file to show that the specific types of samples under study are stable for the longer time, and has received a variance from the Regional Administrator under Section 136.3(e). Some samples may not be stable for the maximum time period given in the table. A permittee, or monitoring laboratory, is obligated to hold the sample for a shorter time if knowledge exists to show that this is necessary to maintain sample stability. See Section 136.3(e) for details.

TABLE 7.1 REQUIRED CONTAINERS, PRESERVATION TECHNIQUES, AND HOLDING TIMES

---

TABLE II NOTES (continued)

5. Should only be used in the presence of residual chlorine.

6. Maximum holding time is 24 hours when sulfide is present. Optionally, all samples may be tested with lead acetate paper being pH adjustments in order to determine if sulfide is present. If sulfide is present, it can be removed by the addition of cadmium nitrate powder until a negative spot test is obtained. The sample is filtered and then NaOH is added to pH 12.

7. Samples should be filtered immediately on-site before adding preservative for dissolved metals.

8. Guidance applies to samples to be analyzed by GC, LC, or GC/MS for specific compounds.

9. Sample receiving no pH adjustment must be analyzed within seven days of sampling.

10. The pH adjustment is not required if acrolein will not be measured. Samples for acrolein receiving no pH adjustment must be analyzed within 3 days of sampling.

11. When the extractable analytes of concern fall within a single chemical category, the specified preservative and maximum holding times should be observed for optimum safeguard of sample integrity. When the analytes of concern fall within two or more chemical categories, the sample may be preserved by cooling to $4^{o}C$, reducing residual chlorine with 0.008% sodium thiosulfate, storing in the dark, and adjusting the pH to 6-9; samples preserved in this manner may be held for seven days before extraction and for forty days after extraction. Exceptions to this optional preservation and holding time procedure are noted in footnote 5 (re the requirement for thiosulfate reduction of residual chlorine), and footnotes 12, 13 (re the analysis of benzidine).

12. If 1, 2-diphenylhydrazine is likely to be present, adjust the pH of the sample to 4.0 $\pm$ 0.2 to prevent rearrengement to benzidine.

TABLE 2 NOTES (continued)

13. Extracts may be stored up to 7 days before analysis if storage is conducted under an inert (oxidant-free) atmosphere.

14. For the analysis of diphenylnitrosamine, add 0.008% $Na_2S_2O_3$ and adjust pH to 7-10 with NaOH within 24 hours of sampling.

15. The pH adjustment may be performed upon receipt at the laboratory and may be omitted if the samples are extracted within 72 hours of collection. For the analysis of aldrin, add 0.008% $Na_2S_2O_3$.

Table 2 corrected by 50 CFR 691, January 4, 1985

# 8.0 Sample Custody

## 8.1 Chain-of-Custody

Samples are physical evidence collected from a facility or the environment. In hazardous waste investigations, sample data may be used as evidence in EPA enforcement proceedings. In support of potential litigation, laboratory chain-of-custody procedures have been established to ensure sample traceability from the time of receipt through completion of analysis.

The National Enforcement Investigations Center (NEIC) of EPA considers a sample in custody under the following conditions:

1. It is in your actual possession, or
2. It is in your view, after being in your physical possession, or
3. It was in your possession and then you locked or sealed it to prevent tampering, or
4. It is in a secure area.

Chain-of-custody originates as samples are collected. Chain-of-custody documentation accompanies the samples as they are moved from the field to the laboratory with shipping information and appropriate signatures indicating custody changes along the way. A chain-of-custody record is included as Figure 8.1-1.

**Figure 8.1-1**
**Chain-of-Custody Record**

Laboratory chain-of-custody is initiated as samples are received and signed for by the Sample Custodian at Ceimic. Documentation of sample whereabouts continues as samples are signed in and out of the central storage facility for analysis in the several Ceimic laboratories using the Sample Control Record (Figure 8.1- 2). After analysis, extracts and any remaining samples are held in the central storage area to await disposal. Prior to disposal of the samples, tags and other identification are removed and placed in the case file.

## 8.2 Laboratory Security

Samples at Ceimic are kept within secure areas during all stages of tenure, including the periods of time spent in preparation, analysis and storage.

The laboratory area is designated as a secure area. The doors to this area are kept locked at all times and may be accessed by key or combination. Authorized personnel only are allowed to enter the secure areas. Visitors to the laboratories must be accompanied by Ceimic staff members.

## 8.3 Duties and Responsibilities of the Sample Custodians

Duties and responsibilities of the Sample custodian shall include but not be limited to:

8.3.1 Receiving samples

Figure 8.1-2
Sample Control Record

SAMPLE CONTROL RECORD

CEIMIC

Project #_____

Refrigerator ID _____

| Laboratory Sample No. | Removed By | Date and Time Removed | Reason | Date and Time Returned |
|---|---|---|---|---|
| | | | | |
| | | | | |
| | | | | |
| | | | | |
| | | | | |
| | | | | |
| | | | | |
| | | | | |
| | | | | |
| | | | | |
| | | | | |
| | | | | |

8.3.2 Inspecting sample shipping containers for presence/absence and condition of:

8.3.2.1 Custody seals, locks, "evidence tape," etc.;

8.3.2.2 Container breakage and/or container integrity.

8.3.3 Recording condition of both shipping containers and sample containers (bottles, jars, cans, etc.) in appropriate logbooks.

This also includes recording if the samples were cool upon arrival, and recording the pH of aqueous samples.

8.3.4 Signing appropriate documents shipped with samples (i.e., airbills, chain-of-custody record(s), Sample Management Office (SMO) Traffic Reports, etc.)

8.3.5 Verifying and recording agreement or non-agreement of information on sample documents (i.e. sample tags, chain-of-custody records, traffic reports, airbills, etc.) in appropriate logbooks or on appropriate forms. If there is non-agreement, recording the problems, contacting the SMO for direction, and notifying appropriate laboratory personnel. (SMO's corrective action directions shall be documented in the case file.)

8.3.6 Initiating the paper work for sample analyses on appropriate laboratory documents (including establishing case and sample files and inventory sheets) as required for analysis or according to laboratory standard operating procedures.

8.3.7 Marking or labelling samples with laboratory sample numbers as appropriate, and cross referencing laboratory numbers to SMO numbers and sample tag as appropriate.

8.3.8 Placing samples, sample extracts, and spent samples into appropriate storage and/or secure areas.

8.3.9 Controlling access to samples in storage and assuring that laboratory standard operating procedures are followed when samples are removed from and returned to storage.

8.3.10 Monitoring chain-of-custody of samples in the laboratory.

8.3.11 Assuring that sample tags are removed from the sample containers and included in the appropriate sample file. Accounting for missing tags in a memo to the file or documenting that the sample tags are actually labels attached to sample containers or were disposed of due to suspected contamination.

8.3.12 Monitoring storage conditions for proper sample preservation such as refrigeration temperature and prevention of cross-contamination.

8.3.13 Returning shipping containers to the proper sampling teams.

8.3.14 Sending shipping containers, prepared sample bottles and sampling instructions to clients who request them.

Figure 8.4-1
Sample Receipt Form

CEIMIC CORPORATION

SAMPLE RECEIPT FORM

Date: EPA Case ID Number:

| | Present | Absent |
|---|---|---|
| Custody Seal..... | | |
| EPA Chain-of-Custody Forms..... | | |
| EPA Traffic Reports or SAS Packing List..... | | |
| Airbills..... | | |
| Sample Tags..... | | |

Condition of custody seal:
(Intact, broken, absent)

Condition of shipping container:

Condition of Sample Bottles: (describe briefly; if broken bottles are present, record SAD ID numbers)

Sample tag ID numbers not recorded on chain-of-custody record(s) or packing list(s):

Verification of agreement or non-agreement of information on receiving documents:

Resolution of problems or discrepancies with Sample Management Office:

Signature:

**8.4 Sample Receipt**

Sample shipments are received at Ceimic by the designated Sample Custodian. Shipping information is recorded in the "incoming" logbook and the paperwork filed chronologically. The shipping containers are then inspected and opened by the Sample Custodian who records the following information on the Sample Receipt Form (Figure 8.4-1) as he/she unpacks the coolers:

- Presence/Absence of:
  1. Custody seals,
  2. Chain-of-custody records,
  3. SMO forms (traffic reports),
  4. Airbills or bills of lading documenting shipment of samples, and
  5. Sample tags;
- Condition of custody seal (intact, broken, absent) and shipping container;
- Condition of sample bottles;
- Sample tag ID numbers <u>not</u> recorded on chain-of-custody records or packing list;
- Verification of agreement or non-agreement of information on receiving documents;
- Resolution of problems or discrepancies with the Sample Management Office.

Following resolution of any problems or discrepancies, the Sample Custodian signs the Sample Receipt Form and originates a custody file for the set of samples, including in it the Sample Receipt Form.

When the Sample Custodian is not available to receive samples, the sample container is signed for by a Ceimic staff member, and the time, date and name of the person receiving the container are recorded in the Incoming Log along with the appropriate shipping information. The samples are then stored under refrigeration in the sample receipt area, which is located within the secured area. The samples are officially received and documented by the Sample Custodian or designee on the next business day.

## 8.5 Sample Log-in and Identification

### 8.5.1 Sample Identification

In order to maintain sample identity, each sample received at Ceimic is assigned a unique sample identification (sample ID) number.

After inspecting the samples, the Sample Custodian assigns each sample a Ceimic Sample ID Number. These numbers are chonologically sequential. Ceimic Sample Identification Numbers appear in the following format:

ww - xxxx - yy - zz

where

"ww" represents the last two digits of the current year;

"xxxx" represents a four digit project number which is assigned sequentially when a sample group (case) is received at Ceimic;

"yy" represents the sample number within the group (case); and

"zzz" represents an individual laboratory code.

e.g.: 87 - 0014 - 06 - ABC

The Ceimic Sample Custodian assigns each sample a ww-xxxx-yy identification number. The zzz suffixes are assigned within the individual laboratories and vary from one laboratory to another. The Ceimic Sample ID Numbers are recorded on the Sample Receipt Form (Figure 8.4-1), in the Sample Receipt Log and on the Sample Information Form (Figure 8.5-1), where they are cross referenced with SMO numbers, sample tag numbers and other client identifiers. Each sample is clearly labelled with its Ceimic Sample ID Number by the Sample Custodian. The same Sample ID Number appears on each sample preparation container and extract vial associated with the sample.

Figure 8.5-1
Ceimic Sample Information Form

CEIMIC CORPORATION

Sample Information Form

Client Name:

Project No. 870024

Due Date:

Ceimic

| SAMPLE ID | # | F | Client Id | Sample matrix | Analyses Required |
|---|---|---|---|---|---|
| 870024 | 1 | A | 8706064-01A | AQ | TSS |
| 870024 | 2 | A | 8706066-01A | AQ | HSC:AQ |
| 870024 | 3 | A | 8706066-01B | AQ | TSS |
| 870024 | 4 | A | 8706068-01A | AQ | ADMIS-ICP,AL |
| 870024 | 5 | A | 8706070-01A | AQ | ADMIS-ICP,AG,BE,CD,CU,NI,ZN |
| 870024 | 5 | B | 8706070-01A | AQ | ADMIS-AA,CD,PB,SE,TL |
| 870024 | 5 | C | 8706070-01A | AQ. | ADMIS-SP,AS,SE |
| 870024 | 5 | D | 8706070-01A | AQ | HSC:AQ |
| 870024 | 6 | A | 8706070-01B | AQ | TSS |
| 870024 | 7 | A | 8706072-01A | AQ | ADMIS-ICP,FE,MN,CD,CU,NI,AG,ZN |
| 870024 | 8 | A | 8706072-01B | AQ | TSS |
| 870024 | 9 | A | 8706074-01A | AQ | ADMIS-ICP,CU,NI,ZN |
| 870024 | 10 | A | 8706074-01B | AQ | TSS |
| 870024 | 11 | A | 8706075-01A | AQ | ADMIS-ICP,AG |
| 870024 | 12 | A | 8706077-01A | AQ | ADMIS-ICP,CR |
| 870024 | 12 | B | 8706077-01A | AQ | ADMIS-AA,PB |
| 870024 | 12 | C | 8706077-01A | AQ | HSC:AQ |
| 870024 | 13 | A | 8706079-01A | AQ | ADMIS-ICP,CR |
| 870024 | 13 | B | 8706079-01A | AQ | ADMIS-AA,PB |
| 870024 | 13 | C | 8706079-01A | AQ | HSC:AQ |
| 870024 | 14 | A | 8706081-01A | AQ | ADMIS-ICP,AL,CR,CU,NI,ZN |
| 870024 | 15 | A | 8706081-01B | AQ | TSS |
| 870024 | 16 | A | 8706083-01A | AQ | ADMIS-ICP,AL,CR,CU,NI,ZN |
| 870024 | 17 | A | 8706083-01B | AQ | TSS |
| 870024 | 18 | A | 8706085-01A | AQ | ADMIS-ICP,CU,ZN |

Sample Custodian: _____ Date:

Project Manager Approval _____ Date:

**8.5.2 Sample Log-In**

The sample log-in system at Ceimic consists of computerized entry into the Sample Receipt Log. The information recorded includes:

- Ceimic Sample Identification Number
- Date of Receipt,
- Client Name,
- Client Sample Identification,
- Sample Matrix,
- Analyses Required,
- Project Number,
- Due Date and Comments, and
- Initials of Sample Custodian or designee.

### 8.5.3 Sample Information

After completing the Sample Receipt Form and making sample entries in the Sample Receipt Log, the Sample Custodian prints out sample data on the Sample Information Form (Figure 8.5- 1), including:

- Client Name,
- Ceimic Project Number,
- Number of Samples Received,
- Type(s) of Samples Received (Sample Matrix),
- Due Date of Samples,
- Ceimic Sample ID Numbers,
- Client ID Number,
- Analyses to be Performed,
- Provision for Signature of Sample Custodian (or designee),
- Date of Sample Log-in, and
- Provision for Signature of Project Manager.

After signing and dating the Sample Information Form, the Sample Custodian notifies the Project Manager of the arrival of the samples. The Project Manager verifies that the information on the Sample Information Form is correct by countersigning and dating the form. The original Sample Information Form is placed in the chain-of-custody file for the case or project.

The custody file is originated by and remains with the Sample Custodian until the samples are disposed of. At that time, the custody file is entered in the Ceimic central file for the case or project.

Copies of the Sample Information Form are distributed to the Ceimic project manager, accounting group and the appropriate laboratory managers. Another copy of the form may be sent to the client as confirmation of sample receipt and specified analyses.

**8.6 Sample Storage**

Samples at Ceimic are stored in a central storage facility within the secured area. After sample receipt and log-in procedures are completed, the Sample Custodian places the samples in their original containers within the appropriate refrigerators in the sample storage area. Refrigerators #1, #2, and #3 are dedicated to inorganic samples; refrigerators #4, #5 and #6 are dedicated to organic samples. Only samples for volatile organics analysis (VOA) are stored in refrigerator #4. No other type of sample may be stored in this refrigerator. The sample storage area is for samples only, no standards or reagents are present.

Refrigerators are maintained at 5°C (+/-4°C). A daily temperature log is kept for each refrigerator by the Sample Custodian. (Figure 8.6-1)

Figure 8.6-1
Temperature Log

CEIMIC CORPORATION

TEMPERATURE LOG

| DATE | TIME | TEMPERATURE | CORRECTIVE ACTION (IF REQUIRED) | ANALYST |
|---|---|---|---|---|
| | | | | |
| | | | | |
| | | | | |
| | | | | |
| | | | | |
| | | | | |
| | | | | |
| | | | | |
| | | | | |
| | | | | |
| | | | | |
| | | | | |
| | | | | |
| | | | | |
| | | | | |
| | | | | |
| | | | | |
| | | | | |
| | | | | |
| | | | | |

Access to the sample storage area is controlled by the Sample Custodian, who is responsible for monitoring sample custody. All transfers of samples into and out of storage are documented on a laboratory chain-of-custody form, the Sample Control Record (Figure 8.1-2). When an analyst removes a sample for preparation and/or analysis, the sample is signed out. Similarly, a sample is signed back in when the analyst returns it to storage prior to the end of his/her working day.

When analysis is complete, extracts and any remaining sample are retained in the central storage area until they may be disposed of. Broken or damaged samples are promptly disposed of in a safe manner, and the disposal documented.

All custody documentation is kept in case custody files originated by the Sample Custodian until samples are removed from storage for disposal. At that time the case custody files are entered into the central case files and the disposal of samples and extracts documented.

Chain-of-custody of a sample ensures that the sample is traceable from when it was taken in the field through laboratory receipt, preparation, analysis and finally, disposal. The primary chain-of-custody documents which may be used to locate a sample at any point in time are:

1. The chain-of custody form from the field describing the origin and transportation of a sample;

2. The Laboratory Sample Receipt Log and supporting log-in records, documenting acceptance of a sample by the Ceimic laboratory; and

3. The Ceimic Sample Control Forms, documenting the analyst who has custody and the reason for removal of a sample from storage.

## 9.0 Calibration Procedures and Frequency

### 9.1 Instruments

Instrument calibration establishes that the system is functioning correctly and at a level of sensitivity sufficient to meet required detection limits. Routine calibration provides a means of rapid detection of instrument variance and possible malfunction, ensuring that data quality is maintained. Specific calibration and check procedures are given in the analytical methods referenced in Section 10. Frequency of calibration and concentration of standards are determined by the cited methods and special contract requirements as well as manufacturer recommendations.

Standard calibration curves of signal response versus concentration are generated on each analytical instrument used for a project, prior to analysis of samples. A calibration curve of the appropriate linear range is established for each paramenter that is included in the analytical procedure employed and is verified on a regular basis with check standards. In general, Ceimic adheres to the calibration criteria specified by the USEPA for the Contract Laboratory Program for both organics and inorganics. For analyses outside of the CLP protocols, other specified calibration practices are stipulated and maintained. The following are examples of calibration procedures for various instrument systems:

GC - An initial calibration is performed using three different concentration levels for each parameter of interest. The initial calibration is done on each quantitation column and each instrument, and is repeated each time a new column is installed or other major changes in the chromatographic system take place.

For CLP-type analyses, continuing calibration takes place at the beginning and once every five samples throughout the seventy-two hour analytical sequence. The percent difference in calibration factors for each standard must not exceed 20% (15% for any standard compound used for quantification.)

GC/MS - Initial calibration at five different concentration levels for each analyte is carried out for each system. Recalibration takes place whenever a major change occurs in the system, such as a column change in the GC or a source cleaning of the mass spectrometer. Continuing calibrations take place every twelve hours of instrument analysis time, and for CLP-type analysis, must have a percent difference of 25% or less in response factors for calibration check compounds.

Prior to analysis of any samples, GC/MS systems are tuned to USEPA specifications for BFB and DFTPP, for volatile and semi-volatile analyses respectively. Verification of tuning criteria occurs every twelve hours of instrument run time.

ICP - Mixed standards are used to perform the initial multi-level calibration. Calibration check standards are analyzed every ten samples to verify instrument calibration. If the signal response of the check standard deviates by more than 10% from the initial calibration, the instrument is recalibrated. An interference control standard is run once every twenty samples to check interference correction inaccuracies.

AA - Several concentrations of individual standards are analyzed to establish the initial calibration curve for each metal. A calibration check standard is analyzed at the beginning and end of every analysis, and after every twenty samples to verify the initial calibration of the instrument. If a check standard falls outside the control limit of +/- 10% from the initial calibration, the instrument is recalibrated. Calibration blanks are analyzed at the beginning and end of the analysis and after every twenty samples during the analysis.

**Standards and Reagents**

Primary sources of standard reference materials used for calibration, calibration checks, and accuracy control are the USEPA and National Bureau of Standards (NBS) repositories. Reliable commercial manufacturers represent a secondary source. Certain projects, especially those involving pesticide registration, may necessitate the use of reference standards

supplied by the client. New standards are routinely validated against known standards that are traceable to EPA or NBS reference materials if possible.

Reagents used in the preparation of matrix spike, surrogate standard, and internal standard spiking solutions for EPA/CLP work are validated using standards obtained directly from EPA or traceable to EPA. Quality Control Check Samples from the EPA-EMSL Quality Assurance Branch in Cincinnati are routinely requested, received and analyzed by the Ceimic laboratories. Standards are periodically analyzed for concentration changes and visually inspected for signs of deterioration such as color change and precipitate formation. A Standards Preparation Logbook, which contains all pertinent information regarding the source and preparation of each analytical standard, is maintained by each of the Ceimic laboratories.

Reagents such as solvents, that are produced and used in large quantities, are examined for purity by subjecting an aliquot to analysis, prior to purchase of an entire lot or shipment. If the material appears satisfactory, the manufacturer or supplier is requested to set aside a sizeable portion of the same lot for Ceimic to be shipped over several months.

## 10.0 Analytical Procedures

The analytical methods that Ceimic uses are contained in the documents cited below. The methods are summarized in Table 10-1 and Table 10-2. In addition Ceimic will use other methodology as required by the specific project or contract.

Methods for Organic Chemical Analysis of Municipal and Industrial Wastewater, EPA-600/4-82-057, July 1982.

Methods for Chemical Analysis of Water and Wastes, EPA-600/4-79-020, 3/83 Revision.

Standard Methods for the Examination of Water and Wastewater, 16th Edition, APHA, Washington, D.C. 1985.

Chemical Characteristics of Marine Samples, API Publication No. 4307, API, Washington, D.C.

Test Methods for Evaluating Solid Waste-Physical/Chemical Methods, SW-846, 3rd Edition. Office of Solid Waste, USEPA, Washington, D.C.

Annual Book of ASTM Standards. Part 31-Water. American Society for Testing and Materials, Philadelphia, PA, 1981.

Contract Laboratory Program. Organic Caucus Protocol, USEPA, 10/88 Revision.

Contract Laboratory Program, Inorganic Caucus Protocol, USEPA. 7/88 Revision.

**Table 10-1**

**Inorganic Analytical Methods Summary**

| Parameter | Method Description | Method Reference |
|---|---|---|
| Sample Preparation (Bulk Analysis) | Acid Description | Method 3050 (1) |
| **Instrumental Analysis** | | |
| Antimony | AA-GF | Method 204.2 (2) |
| Arsenic | AA-GF | Method 206.2 (2) |
| Barium | ICP | Method 200.7 (2) |
| Beryllium | ICP | Method 200.7 (2) |
| Cadmium | AA-GF | Method 213.2 (2) |
| Chromium | ICP | Method 200.7 (2) |
| Copper | ICP | Method 200.7 (2) |
| Iron | ICP | Method 200.7 (2) |
| Lead | AA-GF | Method 239.2 (2) |
| Manganese | ICP | Method 200.7 (2) |
| Mercury | Cold Vapor AA | Method 245.5 (2) |
| Nickel | ICP | Method 200.7 (2) |
| Selenium | AA-GF | Method 270.2 (2) |
| Silver | ICP | Method 200.7 (2) |
| Sodium | ICP | Method 200.7 (2) |
| Thallium | AA-GF | Method 279.2 (2) |
| Zinc | ICP | Method 200.7 (2) |
| Other metals as required | ICP | Method 200.7 (2) |
| Hexavalent Cr | Colorimetric diphenylcarbizide | Method D1687-80 (3) |
| Cyanide (total) | Distillation colorimetric | Method 335.2 (2) |
| Cyanide (amenable) | Chlorination, Distillation, colorimetric | Method 335.1 (2) |
| Acidity | Titrimetric | Method 305.1 (2) |
| Alkalinity | Titrimetric | Method 310.1 (2) |
| pH | Electometric | Method 150.1 (2) |
| Nitrate/Nitrite | Colorimetric, manual cadmium reduction | Method 353.3 (2) |
| Phosphorus | Colorimetric, ascorbic acid | Method 365.3 (2) |
| Ammonia | Distillation, colorimetric | Method 350.2 (2) |

**Table 10-1 (cont'd.)**
**Inorganic Analytical Methods Summary**

| Parameter | Method Description | Method Reference |
|---|---|---|
| Total Kjeldahl Nitrogen (TKN) | Digestion, distillation colorimetric | Method 351.3 (2) |
| Chloride | Titrimetric, Mercuric nitrate | Method 325.3 |
| Biological Oxygen Demand (BOD) | 5 days at 2°C | Method 405.1 |
| Chemical Oxygen Demand (COD) | Colorimetric | Method 410.4 (2) |
| Fluoride | Potentiometric, specific ion electrode | Method 340.2 (2) |
| Phenols | Distillation, Spectrophotometric | Method 420.1 (2) |
| Sulfate | Turbidimetric | Method 375.4 (2) |
| Conductivity | Specific conductance | Method 120.1 (2) |
| **Solids** | | |
| -dissolved (TDS) | Gravimetric, dried at 180°C | Method 160.1 (2) |
| -suspended (TSS) | Gravimetric, dried at 103-105°C | Method 160.2 (2) |
| -totals (TS) | Gravimetric, dried at 103-105°C | Method 160.3 (2) |
| -volatile (TVS) | Gravimetric, Ignition at 550°C | Method 160.4 (2) |
| -settleable (SS) | Volumetric, Imhoff Cone | Method 110.2 (2) |
| Color | Colorimetric Pt-Co | Method 110.2 (2) |
| Sulfide | Titrimetric, Iodine | Method 376.1 (2) |
| Sulfite | Titrimetric | Method 377.1 (2) |
| Surfactants (mBAS) | Colorimetric | Method 425.1 (2) |

(1) USEPA. 1982. Test Methods for Evaluating Solid Waste Physical/-Chemical Methods. SW-846 (Second Edition). Office of Solid Waste, USEPA, Washington, D.C.

(2) USEPA. 1979. Methods for Chemical Analysis of Water and Wastes. EPA 600/4-79-020 (Revised, March 1983). EPA/EMSL, Cincinnati, Ohio.

(3) ASTM. 1981. Annual Book of ASTM Standards. Part 31-Water. American Society for Testing and Materials. Philadelphia, PA 19103.

ICP - Inductively Coupled Argon Plasma Emission Spectroscopy
AA-GF - Graphite Furnace Atomic Absorption Spectrophotometry
AA - Atomic Absorption Spectrometry.

**Table 10-2**
**Organic Analytical Methods Summary**

| Parameter | Method Reference | Method Description |
|---|---|---|
| Volatile Organic Compounds (Aqueous) | Method 624 (1) | Purge and trap, gas Chromatography/mass spectrometry |
| Volatile Organic Compounds (Halogenated; aqueous) | Method 601 (1) | Purge and trap, gas chromatography/ halogen specific (Hall) detection |
| Volatile Organic Compounds (Aromatic; aqueous) | Method 602 (1) | Purge and trap, gas chromatography/ photo-ionization detection |
| Semivolatile Organics-Acid/Base/Neutral Extractables (Aqueous) | Method 625 (1) | Solvent extraction, gas chromatography/ mass spectrometry |
| Pesticides/PCBs (Aqueous) | Method 608 (1) | Solvent extraction, gas chromatography/ electron Capture detection |
| Herbicides (Aqueous) | Method 509B (2) | Solvent extraction, derivatization, gas chromatography/Electron capture detection |

(1) USEPA. 1984. Methods for Organic Chemical Analysis of Municipal and Industrial Wastewater. Appendix A. 40 CFR Part 136. Federa Register, Vol. 49, No. 209, 1984.

(2) APHA. 1985. Standard Methods for the Examination of Water and Wastewater. Sixteenth Edition. American Public Health Associatior Washington, DC.

**Table 10-2 (cont'd.)**
**Organic Analytical Methods Summary**

| Parameter | Method Referencee | Method Description |
|---|---|---|
| Petroleum Hydrocarbons | Method 2/6 (3) | Solvent extraction, gas chromatography/ flame ionization detection |
| Oil and Grease | Method 413.1 (4) | Solvent extraction, gravimetric determination |
| Solvents (Direct Aqueous injection) | Method D2908-74 (5) | Direct aqueous injection, gas chromatography/flame ionization detection |

(3) Warner, J.S 1987. Chemical Characteristics of Marine Samples. API Publication No. 4307. API, Washington, DC.

(4) USEPA. 1979. Methods for Chemical Analysis of Water and Wastes. EPA 600/4-79-020 (Revised, March 1983). EPA/EMSL, Cincinnati, Ohio.

(5) ASTM. 1981. Annual book of ASTM Standards. Part 31-Water. American Society for Testing and Materials. Philadelphia, PA 19103.

# Data Reduction, Validation, and Reporting

## 11.1 Data Reduction

Instrumental print-outs, terminal readings, chromatograms, strip chart recordings, and physical measurements provide raw analytical data that are reduced to concentrations of analytes through the application of appropriate equations. Equations are generally given within the analytical methods referenced in Section 10. Data reduction may be performed manually by scientists or automatically by computerized data systems on the instruments.

## 11.2 Data Validation

Data validation is an essential element of the QA evaluation component. Validation is the process of data review and subsequent acceptance or rejection based on established criteria. The following criteria are employed by Ceimic in the evaluation of data:

- Accurance requirements,
- Precision requirements,
- Detection limit requirements,
- Completeness,
- Representativeness,
- Correctness (of manual and computer calculations),
- Contractual requirements, and
- Documentation requirements.

As in the case of EPA/CLP procedures, data acceptance limits may be defined within the method. The same windows are used for similar types of analyses if the sample matrix permits. As a tracking mechanism of data acceptability, quality control charts may be plotted for specific parameters determined in identical, homogeneous matrices. Control limits for methods development and research data may be statistically determined as analytical results are generated. Validation includes data review at both the technical and editorial levels. Technical review evaluates the application of analytical protocols and resultant effects on the data generated. Editorial review assesses the content, lucidity, conciseness, and completeness of the data report.

**11.3 Data Reporting**

Interpretation of raw data and calculation of results are performed by a scientist experienced in the analytical methodology. Upon completion of data reduction, the scientist signs for the reported results on the data report form. Another scientist, experienced in the same discipline, reviews and verifies the results, also signing the data report form. The laboratory manager, who is responsible for the data generated in that laboratory, often performs the second tier of review or may independently review

data and completed report forms. Members of the QA staff also check the results on selected sets of data.At a minimum, each data point is checked by two scientists experienced with the analytical methodology. Records are maintained for all data, even for those results that are rejected as invalid. A flow chart showing the data reduction, validation, and reporting process is given in Figure 11-1.

**Figure 11-1**
**Data Reporting Process**

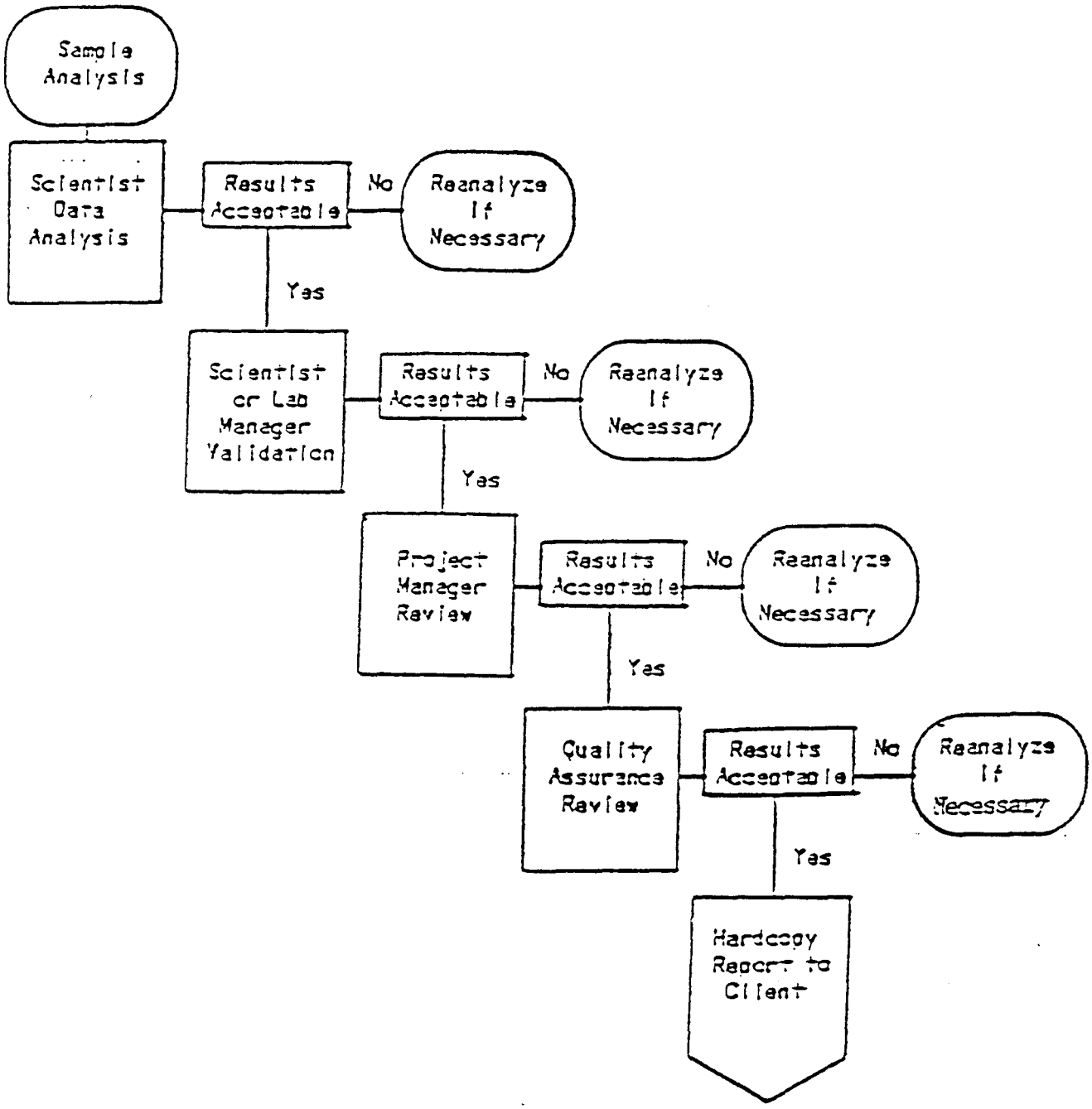

## 12.0 Laboratory Quality Control

Ceimic analytical and field procedures are based on sound quality control methodology, which derives from three primary sources:

1. Standards for Good Laboratory Practice.
2. Specific EPA and other approved analytical methods, and
3. "Handbook for Analytical Quality Control in Water and Wastewater Laboratories" (EPA 600/4-79-019).

In the application of established analytical procedures, Ceimic employs, at a minimum, the QC protocols described in the references found in the Analytical Methods section. Specific projects may require additional quality control measures, due to such factors as difficult sample matrices or use of innovative techniques. For those projects Ceimic will recommend and implement, subject to client approval, the QC measures necessary to produce data of known quality.

Each of the Ceimic laboratories has an individual QC program which includes, but is not limited to, the practices described below:

**General QC Protocols - Organics Laboratory**

- Trip blanks and holding blanks, when applicable, to detect contamination during sample shipping, handling and storage.
- Procedural blanks, at a minimum of one in every 20 samples to detect contamination during analysis.

- One matrix spike of laboratory water or soil every 20 samples, to determine accuracy.
- One matrix spike duplicate of laboratory water or soil every 20 samples, to determine precision.
- Sample spikes and spike duplicates, as requisitioned by CLP, to determine accuracy and the presence of matrix effects.
- Check samples periodically, to document accuracy.
- Performance evaluation samples from EPA, to verify continuing compliance with EPA QA/QC standards.
- Surrogate standards and calculation of recoveries, to determine matrix effects.
- Internal standards for GC/MS analysis, to account for sample-to-sample variation.
- GC analysis of EPA traceable standards to verify working standard accuracy and instrument performance.
- Initial multi-level calibration of instruments, to establish calibration curves.
- Daily calibration of instruments.
- Tuning of GC/MS systems once every 12 hours to EPA specifications, for consistency in data generation.
- Control limits, to determine acceptability.

**General QC Protocols - Metals Laboratory**

- Analysis by ICP (inductively coupled plasma spectroscopy) or flame atomic absorption spectroscopy for most metals.
- Analysis by Zeeman effect graphite furnace atomic absorption spectroscopy for low concentrations of certain metals.
- Initial and Continuing Calibration blanks, and procedural blanks to detect instrumental or laboratory contamination.
- Initial multi-level calibration of instruments, to establish calibration curves by individual standards (AA) or mixed standards (ICP).
- Check standards every ten samples, to verify instrument calibration.
- Control limit of +/- 10%; recalibration if check standard deviates by more than 10% from initial calibration.
- One matrix spike of laboratory water or soil every 10 samples, to determine accuracy for AA analysis.
- One sample spike of one element every 10 samples, to determine accuracy and matrix effects for AA analysis.
- Method of standard additions if sample spike recovery falls outside +/- 15% control limit for AA analyses.
- One sample duplicate every 20 samples, to determine precision and matrix effects for AA and ICP analyses.
- Interference control standard every 20 samples, to check interference correction inaccuracies for ICP analyses.
- Check samples every 20 samples, to document accuracy.
- Performance evaluation samples from EPA, to verify continuing compliance with EPA QA/QC standards.

**General QC Protocols - Classical Chemistry Laboratory (Cyanide/Mercury)**

- One procedural blank per sample batch (minimum of 1 per 20 samples), to detect contamination during analysis.
- One matrix spike of laboratory water or soil every 20 samples, to determine accuracy.
- One matric spike duplicate of laboratory water or soil every 20 samples, to determine precision.
- One sample spike every 20 samples, to determine accuracy and matrix effects.
- One sample duplicate every 20 samples, to determine precision and matrix effects.
- Check samples periodically, to document accuracy.
- Performance evaluation samples from EPA, to verify continuing compliance with EPA QA/QC standards.
- Initial multi-level calibrations, to establish calibration curves.
- Calibration checks, to verify calibration.
  CN - every 5 samples
  Hg - every 10 samples
- Control limits to determine acceptability.

## 13.0 Quality Assurance Systems Audits, Performance Audits and Frequency

As a participant in several certification programs and various contracts, the Ceimic laboratory is frequently subjected to rigorous performance evaluations and on-site inspections by regulatory agencies and commercial clients. The Ceimic Quality Assurance staff performs routine internal audits of the laboratory as well. The audits ensure that all laboratory systems including sample control, analytical procedures, data generation, and documentation meet contractual requirements and comply with good laboratory practice standards.

### 13.1 Systems Audits

The director of the laboratory approval program for the Department of Environmental Monitoring (DEM) in the State of Rhode Island recently inspected the Ceimic laboratory facilities as part of the Rhode Island certification process.

The Ceimic laboratories are audited rouinely by QA staff members in order to detect any problems in sample flow, analytical procedures, or documentation problems and to ensure adherence to the good laboratory practices as described in Ceimic laboratory operating manuals. The items covered in an internal systems audit at Ceimic are outlined on a general basis in Figure 13.1-1.

**13.2 Performance Audits**

The Ceimic laboratories are also subjected to frequent performance evaluations.

**Figure 13.1-1**
**Audit Outline**

**Laboratory Audit - General Considerations**

- Sample Flow Through Lab
- Chain of Custody
  - Usual
  - Strict
- **Sample Storage**
  - Controlled Access
  - Proximity to Chemical Storage
  - Physical Conditions, e.g., Temperature
  - Holding Times
- **Sample Work-up and/or Analysis**
  - SOPs
  - Logbooks
    - Standards Preparation
    - Instruments - Sample Analysis
    - Calibration/Tune
    - Standards Analyses
    - Check Samples
    - Balance
    - Temperature
  - Notebooks
    - Dates
    - Signature
    - Filled Pages
    - Initialed Errors with Single-line Crossouts
    - Units Recorded
  - QC Samples
    - Blanks
    - Spikes
    - Duplicates
    - Surrogates
    - Control Charts
- **Data File Storage**
  - Hard Copies
  - Other Media - Magnetic Tape, Disk
- **Laboratory Safety**
- **Organization, Order**

**Sampling**

- **Container Preparation**
- **Preservatives(s)**
- **Techniques**

**QA Access - Corrective Action Forms**

The USEPA Contract Laboratory Program requires successful performance of pre-award performance evaluation samples prior to acceptance into the program. Once established in the program, a lab must continue to demonstrate performance capabilities by successfully analyzing blind samples sent by the EPA each quarter. Ceimic also participates in the Water Supply (WS) and Water Pollution (WP) Series of Performance Evaluations sponsored by the Quality Assurance Branch of the EPA. Successful analyses of these samples are required as part of the laboratory certification process for the environmental agencies of several states.

**Table 13.2-1**
**Ceimic Performance Evaluations**

| Agency/Program | Parameter(s) | Date |
|---|---|---|
| 1 USEPA-EMSL/Water Supply Study(WS022) | VOA, Pesticides/ PCBs, Metals | July, 1988 |
| 2 USEPA-EMSL/Water Pollution Study(WP021) | VOA,Pesticides/ Metals | October, 1988 |

Performance is monitored internally on a daily basis at Ceimic through the use of surrogate standards and matrix control samples. Check samples obtained from EPA-EMSL, Cincinnati, QA Branch, and from independent commercial sources are employed routinely in each of the Ceimic laboratories and ensure continuing high level performance.

## 14.0 Preventive Maintenance

Preventive maintenance is a routine practice at Ceimic for each analytical instrument. Scheduled preventive maintenance minimizes instrument downtime and consequent interruption of analysis. The laboratory personnel at Ceimic are familiar with maintenance requirements of the instruments they operate. This familiarity is based on conventional education, specialized courses and hands-on experience. Designated staff members are trained at manufacture facilities in the routine maintenance procedures for major analytical instrumentation. An example logbook page for GC/MS routine maintenance is presented as Figure 14-1.

Ceimic maintains an inventory of replacement parts required for preventive maintenance and spare parts that often need replacement, such as electron multipliers for GC/MS systems and the more mundane fuses and ferrules.

In the case of a downed instrument, the problem is diagnosed as quickly as possible. If necessary, replacement parts are ordered and repairs performed by skilled in-house personnel. Key instrumentation is maintained under service contract. As a third option, a service call is placed with the manufacturer. Instrument problems and repairs are documented in logbooks kept in each laboratory; an example is given in Figure 14-2.

Figure 14-1

GC/MS Routine Instrument Maintenance for Semi-Volatiles

| Date | Oper | Instr. ID | Septum Changed | Liner Changed | New O-Ring | Column Maintenance Front-End | Column Maintenance Detector-End | Other | Comments |
|---|---|---|---|---|---|---|---|---|---|
| | | | | | | | | | |
| | | | | | | | | | |
| | | | | | | | | | |
| | | | | | | | | | |
| | | | | | | | | | |
| | | | | | | | | | |
| | | | | | | | | | |
| | | | | | | | | | |
| | | | | | | | | | |

**Figure 14-2**

**GC/MS Non-Routine Instrument Maintenance**

CEIMIC CORPORATION

BNA004

| | |
|---|---|
| Instrument: _____ | Problem Site: _____ |
| Date Reported: _____ By: _____ | _____ GC |
| Date Resolved: _____ By: _____ | _____ Gas Line |
| Comments on Repair: _____ | _____ Detector |
| _____ | _____ Other (Describe) |
| _____ | _____ |
| | _____ |

Description of problem:

Resolution:

## 15.0 Specific Routine Procedures Used to Assess Data Precision, Accuracy, and Completeness

Precision, accuracy, and completeness are discussed in Section 6 as well.

### 15.1 Precision

Precision is frequently determined by the comparison of replicates, where replicates result from an original sample that has been split for identical analyses. Standard deviations, of a sample is commonly used in estimating precision.

Sample standard deviation:

$$s = \{[1/(n-1)] \times \sum_{i=1}^{n} (x_i - x)^2\}$$

where a quantity x (e.g., a concentration) is measured n times with a mean, $\bar{x}$.

The relative standard deviation, RSD (or sample coefficient of variation, CV), which expresses standard deviation as a percentage of the mean, is generally useful in the comparison of three or more replicates (although it may be applied in the case of n=2).

$$RSD = 100\ (s/\bar{x})$$

or

$$CV = 100\ (s/\bar{x})$$

where: RSD = relative standard deviation, or
CV = coefficient of variation
s = standard deviation
x = mean

In the case of duplicates -- samples that result when an original sample has been split into two for identical analyses -- the percent difference (%D) between the two samples may be used to estimate precision:

$$\%D = \{2 \times (D_1 - D_2)/(D_1 + D_2)\}$$

where:

$\%D$ = percent difference
$D_1$ = first sample value
$D_2$ = second sample value (duplicate)

**15.2 Accuracy**

The determination of accuracy of a measurement requires a knowledge of the true or accepted value for the signal being measured. Accuracy may be calculated in terms of bias as follows:

$$Bias = X - T$$

$$\%Bias = 100(X - T)/T$$

Where: X = average observed value of measurement
T = "true" value

Accuracy may also be calculated in terms of the recovery of spiked samples.

$$\%Recovery = 100\ \{\bar{X}/T\}$$

## 15.3 Completeness

Determining whether a data base is complete or incomplete may be quite difficult. To be considered complete, the data set must contain all QC check analysis verifying precision and accuracy for the analytical protocol. Less obvious is whether the data are sufficient to achieve the goals of the project. All data are reviewed in terms of goals in order to determine if the data base is sufficient.

Where possible, the percent completeness for each set of samples is calculated as follows:

$$\frac{\text{valid data obtained}}{\text{total data planned}} \ \%\text{completeness} = \times 100$$

## 16.0 Corrective Action

An essential element of the QA Program, Corrective Action provides systematic, active measures to be taken in the resolution of problems and the restoration of analytical systems to proper functioning.

Corrective actions for laboratory problems are described in Ceimic laboratory operating manuals. Personal experience often is most valuable in alerting the bench scientist to suspicious results or malfunctioning equipment. Specific QC procedures are designed to help analysts determine the need for corrective actions (See Section 11, Data Reduction, Validation, and Reporting). Corrective actions taken by scientists in the laboratory help to avoid the collection of poor quality data.

Examples of conditions that may warrant corrective actions are given below:

1. Tuning or calibration of instruments outside of specifications.
2. QC data for precision and accuracy outside of acceptance limits.
3. Undesirable trends in concentration, surrogate and spike recoveries, response factors or relative percent difference.
4. Abnormal variation in detection limits.
5. Check sample results out of range.

Problems not immediately detected during the course of analysis may require more formalized, long-term corrective action. The essential steps in the corrective action system are:

1. Identify and define the problem.
2. Assign responsibility for investigating the problem.
3. Investigate and determine the cause of the problem.
4. Determine a corrective action to eliminate the problem.
5. Assign and accept responsibility for implementing the corrective action.
6. Establish effectiveness of the corrective action and implement it.
7. Verify that the corrective action has eliminated the problem.

This scheme is generally accomplished through the use of Corrective Action Request Forms (Figure 16-1) available to all Ceimic staff members. Using this form, any laboratory scientist or project member may notify the QA Director of a problem. The QA Director initiates the corrective action by relating the problem to the appropriate laboratory managers and/or project managers who investigate or assign responsibility for investigating the problem and its cause. Once determined, an appropriate corrective action is approved by the QA Director. Its implementation is later verified through a laboratory audit.

Information contained on Corrective Action forms is kept confidential within Ceimic and is generally limited to the individuals involved. Severe problems and difficulties may warrant special reports to the President of Ceimic who will ensure that the appropriate corrective actions are taken.

**Figure 16-1.**
**Ceimic Quality Assurance Corrective Action Request Form**

CEIMIC CORPORATION

Quality Assurance Corrective Action Request

Originator: _____ Date: _____

Laboratory: _____ Project: _____

Problem: _____

_____

_____

_____

_____

_____

_____

_____

_____

---

Action Planned: Implemented:

_____

_____

_____

_____

_____

_____

_____

_____

_____

_____

_____

---

QA Director: _____ Date: _____

---

## 17.0 Quality Assurance Reports to Management

The Ceimic Director of Quality Assurance submits a QA report each quarter to the President of Ceimic and the Laboratory Manager. The report contains detailed information on QA activities during the previous three months including:

1. Summary of systems and audits.
2. Performance evaluation samples analyzed and scores received.
3. Status of certifications.
4. Laboratory QA/QC review.
5. Problems and corrective actions.
6. Comments and recommendations.

In the case of a severe problem or difficulty, a special report is prepared by the QA Director and submitted in a timely manner to the management.

## 18.0 Facilities:

Ceimic Laboratories are located in a 12,500 sq. ft., one story building. Approximately 4,400 sq. ft. is actual laboratory space; 5,000 sq. ft. are offices and support area and another 2,500 sq. ft. is designated as a storage area. Organic Laboratories: The Organic Laboratories consist of two preparation laboratories: Organic Preparation Laboratory 1 and 2; and two instrument rooms (Volatile Organics and Semi-Volatile Organics/Pesticides/PCBs). The Organic Preparation Laboratory-1 is a large (1,170 sq. ft.) laboratory for the routine preparation of environmental samples. The Organic Preparation Laboratory-2, is a smaller (324 sq. ft.) area where environmental samples are prepared which require special handling.

The Volatile Organic Analysis (VOA) instrument room(750 sq. ft.) is situated well apart from the Organic Preparation Laboratories is to avoid contamination of VOA samples by solvents used in these Preparation Laboratories.

The base neutrals and acid extractables (BNA or semi-VOA) and gas chromatography (GC) instrument room (850 sq. ft.) is located between the VOA instrument room and the Organic Preparation Laboratories.

**Inorganic Laboratories:** The Inorganic Laboratories are divided into an inorganic preparation/wet chemistry laboratory (950 sq. ft.) and an inorganic instrument room (350 sq. ft.).

Samples will be received and initially stored in a designated Sample Receiving Room (320 sq. ft.) directly adjoining the entrance hall of the Ceimic building. Additional sample storage space is available in the 2,500 sq. ft. storage area.

**Equipment - Organic Laboratories:** The Organic Preparation Laboratory-1 contains 90 linear feet of bench space and will initially be outfitted with three (3) 6' fume hoods. Bench space has been allocated for three additional fume hoods. This laboratory contains a 2' x 8 ' solvent storage room with a "blow-out" roof exposure. A Millipore Mili-Q ultrapure water system is located in this laboratory. Standard organic laboratory equipment located in this labortory includes:

- muffle furnace
- drying oven
- sonicator
- analytical balance (0.1 mg accuracy)
- soxhlet extractors
- Rotovaps
- water baths
- continuous liquid-liquid extractors

The Organic Preparation Laboratory-2 has 40 linear feet of bench space and two (2) 6' fume hoods. Standard organic laboratory equipment located in this laboratory include:

- Rotovaps
- Soxhlet extractors

The VOA instrument room contains 64 linear feet of bench space and a canopy hood and sink bench (6 linear feet). This instrument room will be equipped with two Hewlett Packard 5970 GC/MS units and a Hewlett-Packard 1000 RTE-A data systems and accessories. There is also a HP 5890 GC with dual Hall and PID capabilities. Up to six additional GC/MSs and two 1000 RTE-A data systems can be located in the VOA room.

The BNA/GC instrument room contains 84 linear feet of bench space and a canopy hood and sink bench (6 linear feet). Initially this instrument room will be equipped with one (1) Hewlett-Packard 5970 GC/MS and two (2) Hewlett-Packard 5890 A GCs. One GC will be outfitted with dual electron capture detectors (ECDs) and an automatic sampler; the second GC will have a dual ECD and FID capabilities.

Data acquisition on the GCs will initially be performed through dedicated Hewlett-Packard 3396A Integrators. In the near future, data generated by the GC's will be off-loaded onto the 1000 RTE-A data system.

**Inorganic Laboratories:** The inorganic preparation/wet chemistry laboratory will have 131 linear feet of bench space; two (2) 6' fume hoods and two 4' class 100 clean benches. Space is allocated for a third fume hood. This laboratory will contain ten (10) cyanide distillation columns and a mercury analyzer.

Standard inorganic laboratory equipment includes:

- analytical balance (0.1 mg accuracy)
- drying oven
- air compressor and storage tank
- vacuum pump

The Inorganic Instrument Room will be equipped with a Perkin-Elmer P-40 inductively coupled argan plasma emmission spectrophotometer and a Perkin-Elmer Zeeman 5100 graphite furnace atomic absorption spectrophotometer.

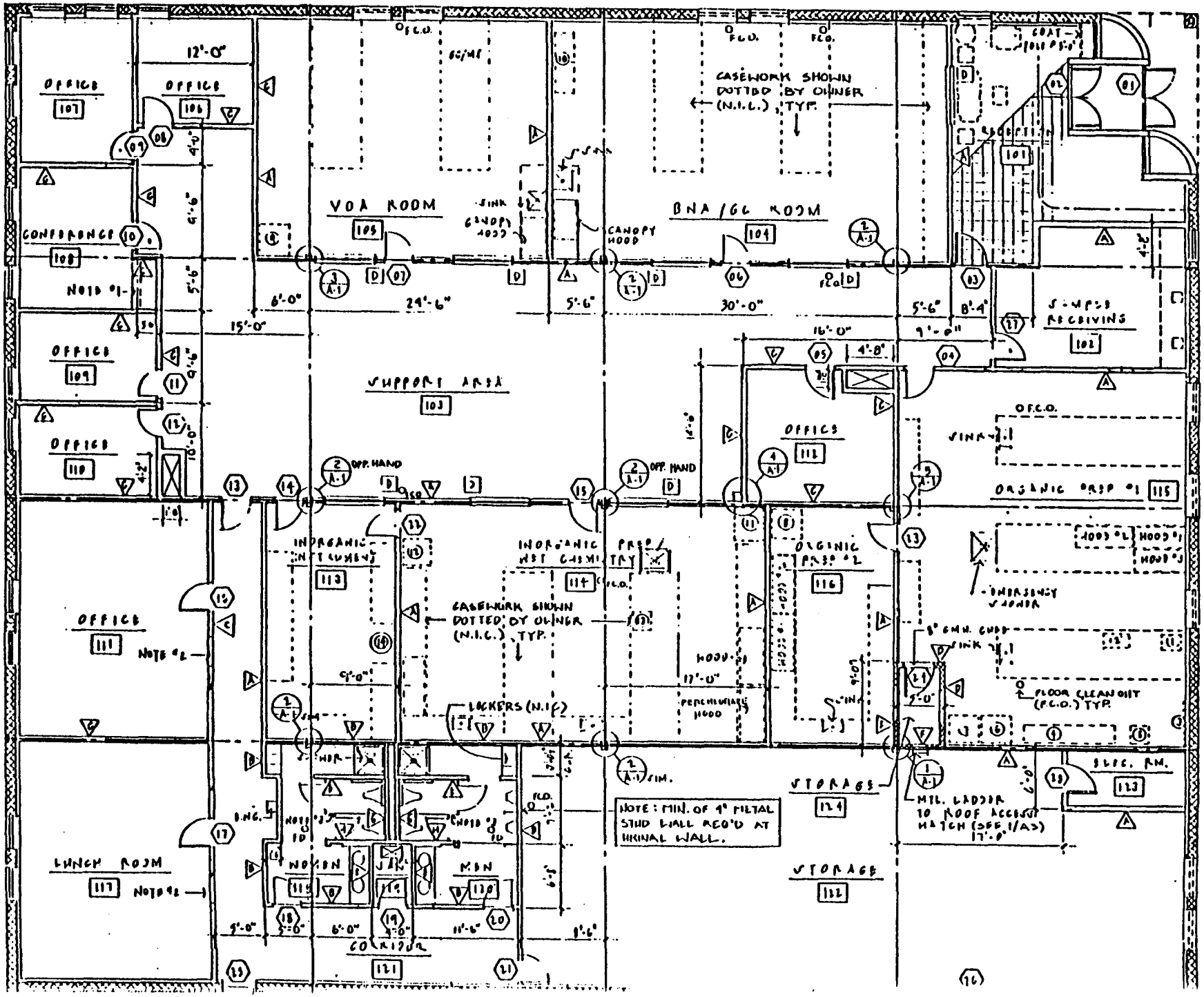


Ceimic QA Plan
Section No. 18
Revision No. 2
Date: January 1991
Page 5 of 5

# APPENDIX A
# PERSONNEL QUALIFICATIONS AND RESUMES

**JOHN F. McGARRY, JR.**
**PRESIDENT**

Mr. McGarry is one of the most experienced administrators of environmental laboratories in the country. He has built and developed two other laboratories which were admitted to the CLP program in both organics and inorganics. He is a Certified Public Accountant, and has been in the industry for fifteen years.

**EDUCATION:**

UNIVERSITY OF MASSACHUSETTS, AMHERST
M.B.A.

BOSTON COLLEGE
B.S. Accounting

**EXPERIENCE:**

| | |
|---|---|
| 1988 - Present | CEIMIC CORPORATION<br>Narragansett, Rhode Island<br>President |
| 1979 - 1987 | BOSTON TECHNOLOGIES, INC.<br>Cambridge, Massachusetts & Austin, Texas<br>Founder and President<br>BTI provided environmental and energy consulting services to both industry and government. |
| 1976 - 1979 | ENERGY RESOURCES, CO. INC. (ERCO)<br>Cambridge, Massachusetts<br>Chief Financial Officer<br>ERCO was an environmental laboratory and consulting firm with annual sales of $10 million. |
| 1974 - 1976 | KPMG PEAT MARWICK<br>Boston, Massachusetts<br>Senior Accountant |

**DAVID P. DICKINSON**
**QUALITY ASSURANCE/QUALITY CONTROL DIRECTOR**

Mr. Dickinson is Ceimic's Quality Assurance/Quality Control Director. He has over seven years of laboratory and QA/QC experience.

**EDUCATION:**

UNIVERSITY OF RHODE ISLAND
B.S. Chemistry

**EXPERIENCE:**

| | |
|---|---|
| 1989 - Present | CEIMIC CORPORATION<br>Narragansett, Rhode Island<br>Quality Assurance/Quality Control |
| 1988 | ALPHA ANALYTICAL LABORATORIES<br>Warwick, Rhode Island<br>Laboratory Manager<br>Designed, constructed and opened a full-service, environmental/analytical laboratory. |
| 1987 - 1988 | TRIFARI, KUSHMAN & FISHEL<br>East Providence, Rhode Island<br>Technical Service Coordinator<br>Insured compliance with established QC standards, maintaining communications network between the laboratory and manufacturing departments. |
| 1984 - 1987 | AMPEREX ELECTRONIC CORPORATION<br>Slatersville, Rhode Island<br>Laboratory Supervisor<br>Managed and supervised manufacturing facilities' laboratory. |
| 1983 - 1984 | RHODE ISLAND ANALYTICAL LABORATORIES, INC.<br>Warwick, Rhode Island<br>Laboratory Supervisor |

**AMY FRIEDLANDER**
**PROGRAM MANAGEMENT**

Ms. Friedlander has a diverse background in the environmental sciences and is responsible for coordinating client needs with Ceimic's laboratories.

**EDUCATION:**

UNIVERSITY OF RHODE ISLAND
Ph.D. (ABD)
Physical Oceanography

YALE UNIVERSITY
M.F.S. School of Forestry and
Environmental Sciences

TUFTS UNIVERSITY
B.S. Biology

**EXPERIENCE:**

| | |
|---|---|
| 1989 - Present | CEIMIC CORPORATION<br>Narragansett, Rhode Island<br>Program Management |
| 1988 - 1989 | SEA EDUCATION ASSOCIATION<br>Woods Hole, Massachusetts<br>Assistant Scientist |
| 1983 - 1988 | GRADUATE SCHOOL OF OCEANOGRAPHY<br>UNIVERSITY OF RHODE ISLAND<br>Narragansett, Rhode Island<br>Graduate Research and Teaching Assistant |
| 1980 - 1982 | NATIONAL MARINE FISHERIES SERVICE<br>Narragansett, Rhode Island<br>Research Assistant |
| 1979 - 1980 | THE ECOSYSTEMS CENTER<br>MARINE BIOLOGICAL LABORATORY<br>Woods Hole, Massachusetts<br>Research Assistant |

1977 - 1979

SCHOOL OF FORESTRY AND ENVIRONMENTAL SCIENCES
YALE UNIVERSITY
New Haven, Connecticut
Research Assistant

**KIN S. CHIU**
**TECHNICAL DIRECTOR**

Dr. Chiu has a superb combination of education and experience. He has performed both routine analytical work and specialized research projects. He has over ten years experience in utilizing GC/MS analyses for environmental applications.

**EDUCATION:**

MASSACHUSETTS INSTITUTE OF TECHNOLOGY
Ph.D. Analytical Chemistry

RUTGERS UNIVERSITY
M.S. Environmental Science

UNIVERSITY OF MARYLAND
B.S. Chemistry

**EXPERIENCE:**

| | |
|---|---|
| 1990 - Present | CEIMIC CORPORATION<br>Narragansett, Rhode Island<br>Technical Director |
| 1988 - 1989 | CEIMIC CORPORATION<br>Narragansett, Rhode Island<br>Organic Laboratory Manager |
| 1983 - 1988 | ENSECO<br>Cambridge, Massachusetts<br>Manager, Research and Development<br>Started with the firm as the manager of the Semi-volatile GC/MS lab, and was promoted in 1985 to direct special analytical projects and research and development. |
| 1979 - 1983 | MASSACHUSETTS INSTITUTE OF TECHNOLOGY<br>Cambridge, Massachusetts<br>Research Assistant<br>Performed analytical chemistry research utilizing GC/MS techniques. |

**MIGUEL MUZZIO**
**GC/MS LABORATORY MANAGER**

Dr. Muzzio has extensive experience in the analysis of organic compounds using state of the art instrumentation including GC/MS and NMR.

**EDUCATION:**

UNIVERSITY OF RHODE ISLAND
Ph.D. Chemistry

UNIVERSITY OF RHODE ISLAND
M.S. Chemistry

UNIVERSITY OF URUGUAY
B.S. Chemistry

**EXPERIENCE:**

| | |
|---|---|
| 1990 - Present | CEIMIC CORPORATION<br>Narragansett, Rhode Island<br>GC/MS Laboratory Manager |
| 1988 - 1989 | CEIMIC CORPORATION<br>Narragansett, Rhode Island<br>GC/MS Analyst |
| 1984 - 1988 | UNIVERSITY OF RHODE ISLAND<br>Kingston, Rhode Island<br>Research Assistant |

**LI-PIN LEE**
**GC/MS SUPERVISOR (BNA)**

Mr. Lee is a trained organic chemist with six years experience in GC/MS.

**EDUCATION:**

WORCESTER POLYTECHNIC INSTITUTE
Ph.D. (ABD) Organic Analytical Chemistry

UNIVERSITY OF FLORIDA
M.A. Agriculture

UNIVERSITY OF NEBRASKA
M.S. Organic Chemistry

NATIONAL CHUNG-HSING UNIVERSITY (TAIWAN)
B.S. Agricultural Chemistry

**EXPERIENCE:**

| | |
|---|---|
| 1988 - Present | CEIMIC CORPORATION<br>Narragansett, Rhode Island<br>GC/MS Supervisor |
| 1988 - 1989 | ALPHA ANALYTICAL LABORATORIES<br>Warwick, Rhode Island<br>GC/MS Supervisor |
| 1985 - 1988 | WORCESTER POLYTECHNIC INSTITUTE<br>Worcester, Massachusetts<br>GC/MS Supervisor |

**CYNTHIA L. BARRETT**
**GC/MS SUPERVISOR (VOA)**

Ms. Barrett has six years experience in environmental analytical chemistry.

**EDUCATION:**

UNIVERSITY OF RHODE ISLAND
B.S. Biology, Minor Chemistry

**EXPERIENCE:**

| | |
|---|---|
| 1990 - Present | CEIMIC CORPORATION<br>Narragansett, Rhode Island<br>GC/MS Supervisor (VOA) |
| 1989 - 1990 | CEIMIC CORPORATION<br>Narragansett, Rhode Island<br>GC/MS Operator (VOA) |
| 1987 - 1989 | RHODE ISLAND DEPARTMENT OF HEALTH<br>Providence, Rhode Island<br>GC-GC/MS Operator (VOA) |
| 1986 - 1987 | RHODE ISLAND ANALYTICAL<br>Warwick, Rhode Island<br>Laboratory Technician |
| 1984 - 1986 | THIBAULT AND ASSOCIATES<br>Providence, Rhode Island<br>Laboratory Technician |

**ALFRED J. KWOLEK, JR.**
**GC/MS DATA REDUCTION SUPERVISOR**

Mr. Kwolek is an analytical chemist with fifteen years experience in environmental analysis using GC/MS.

**EDUCATION:**

UNIVERSITY OF RHODE ISLAND
M.S. Environmental Health Services
B.A. Biology

**EXPERIENCE:**

| | |
|---|---|
| 1990 - Present | CEIMIC CORPORATION<br>Narragansett, Rhode Island<br>Data Reduction Supervisor |
| 1988 - 1989 | CEIMIC CORPORATION<br>Narragansett, Rhode Island<br>VOA Laboratory Manager |
| 1974 - 1988 | RHODE ISLAND DEPARTMENT OF HEALTH<br>Providence, Rhode Island<br>Principal Chemist/Supervisor<br>Started as a staff chemist and was promoted in 1984 to senior chemist and in 1987 to principal chemist/supervisor in the organic laboratory. |
| 1988 | FINNIGAN MAT<br>Livingston, New Jersey<br>Manager, Consulting Chemist Program<br>Managed a GC/MS Applications Program |

**KEVIN DUFFY**
**GC LABORATORY SUPERVISOR**

Mr. Duffy is an analytical chemist with seven years of experience in GC analysis of environmental samples.

**EDUCATION:**

UNIVERSITY OF MARYLAND
B.S. Chemistry

**EXPERIENCE:**

| | |
|---|---|
| 1989 - Present | CEIMIC CORPORATION<br>Narragansett, Rhode Island<br>GC Laboratory Supervisor |
| 1986 - 1989 | ENSECO/ERCO LABORATORY<br>Cambridge, Massachusetts<br>GC Chemist |
| 1984 - 1986 | FMC CORPORATION<br>Baltimore, Maryland<br>Staff Chemist |
| 1979 - 1983 | MARYLAND DEPARTMENT OF AGRICULTURE<br>College Park, Maryland<br>Laboratory Technician |

**SHAWN M. DREW**
**SAMPLE PREPARATION SUPERVISOR**

Mr. Drew is a laboratory analyst with over eight years experience in environmental research and analysis.

**EDUCATION:**

UNIVERSITY OF RHODE ISLAND
B.S. Zoology

**EXPERIENCE:**

| | |
|---|---|
| 1989 - Present | CEIMIC CORPORATION<br>Narragansett, Rhode Island<br>Sample Preparation Supervisor |
| 1981 - 1989 | NATIONAL MARINE FISHERIES SERVICE<br>Narragansett, Rhode Island<br>Sample Preparation/Classical Chemistry |

**VERONICA A. MORETTI**
**DOCUMENT CONTROL/CLP REPORTING SUPERVISOR**

Ms. Moretti, a degreed MIS specialist, is responsible for control of client samples and data reporting of over 600 CLP samples per month.

**EDUCATION:**

UNIVERSITY OF RHODE ISLAND
B.S. Management Information Systems

**EXPERIENCE:**

| | |
|---|---|
| 1989 - Present | CEIMIC CORPORATION<br>Narragansett, Rhode Island<br>Document Control/CLP Data Reporting Supervisor |
| 1988 | CEIMIC CORPORATION<br>Narragansett, Rhode Island<br>Document Control/Sample Custodian |
| 1984 - 1988 | UNIVERSITY OF RHODE ISLAND<br>Kingston, Rhode Island<br>Programmer |

**REINIER A. COURANT**
**INORGANIC LABORATORY MANAGER**

Mr. Courant is an analytical scientist who has over twenty years of experience in oceanographic and environmental chemistry. He was formerly Laboratory Manager of E3I which under his direction was admitted to EPA's Contract Laboratory Program in both organics and inorganics.

**EDUCATION:**

UNIVERSITY OF RHODE ISLAND
M.S. Chemical Oceanography

NORTHEASTERN UNIVERSITY
M.S. Mathematics

DELFT INSTITUTE OF TECHNOLOGY (Netherlands)
B.S. Chemistry

**EXPERIENCE:**

| | |
|---|---|
| 1988 - Present | CEIMIC CORPORATION<br>Narragansett, Rhode Island<br>Inorganic Laboratory Manager |
| 1980 - 1988 | ENERGY & ENVIRONMENTAL ENGINEERING, INC.<br>Cambridge, Massachusetts<br>Vice President & Laboratory Manager |
| 1978 - 1980 | INTERSTATE ELECTRONIC CORPORATION<br>Anaheim, California<br>Chief Scientist/Senior Oceanographer |
| 1976 - 1978 | ERCO (now ENSECO)<br>Cambridge, Massachusetts<br>Senior Oceanographer/Chemist |
| 1972 - 1976 | UNIVERSITY OF RHODE ISLAND<br>Narragansett, Rhode Island<br>Graduate Research Assistant |
| 1969 - 1972 | WOODS HOLE OCEANOGRAPHIC INSTITUTE<br>Woods Hole, Massachusetts<br>Research Assistant |

**PHYLLIS SHILLER**
**CLASSICAL CHEMISTRY SUPERVISOR**

Ms. Shiller is an analytical chemist with four years experience in inorganic chemistry.

**EDUCATION:**

UNIVERSITY OF RHODE ISLAND
B.S. Chemistry

**EXPERIENCE:**

| | |
|---|---|
| 1990 - Present | CEIMIC CORPORATION<br>Narragansett, Rhode Island<br>Classical Chemistry Supervisor |
| 1989 | CEIMIC CORPORATION<br>Narragansett, Rhode Island<br>Analytical Chemist |
| 1988 | ALPHA ANALYTICAL LABORATORIES<br>Warwick, Rhode Island<br>Inorganic Department Manager |
| 1987 | COVOFINISH LABORATORY<br>Burriville, Rhode Island<br>Chemist |

**ROBERT W. FLYNN**
**CHIEF FINANCIAL OFFICER**

Mr. Flynn is Ceimic's Chief Financial Officer. He is a Certified Public Accountant and prior to joining Ceimic, was the CFO for a $100 million firm.

**EDUCATION:**

NORTHEASTERN UNIVERSITY
M.S. Accounting

COLLEGE OF THE HOLY CROSS
B.A. Economics

**EXPERIENCE:**

| | |
|---|---|
| 1988 - Present | CEIMIC CORPORATION<br>Narragansett, Rhode Island<br>Vice President and Chief Financial Officer |
| 1985 - 1988 | THE WASHINGTON POST COMPANY<br>Washington, D.C. & Phoenix, Arizona<br>Vice President and Chief Financial Officer<br>Started as Director of Auditing in the Corporate office and then promoted to CFO of Cable TV subsidiary. |
| 1980 - 1985 | INGERSOLL RAND COMPANY<br>Woodcliff Lake, New Jersey<br>Director, Corporate Internal Audit<br>Started as supervisor and promoted to regional manager in 1981 and director in 1983. |
| 1978 - 1980 | POLAROID CORPORATION<br>Cambridge, Massachusetts<br>Senior Auditor |
| 1974 - 1977 | KPMG PEAT MARWICK<br>Boston, Massachusetts<br>Senior Accountant |

**JAMES S. BENNETT**
**MARKETING**

Mr. Bennett is responsible for customer service activities. He has ten years customer service experience.

**EDUCATION:**

BROWN UNIVERSITY
B.A. Classics

**EXPERIENCE:**

| | |
|---|---|
| 1988 - Present | CEIMIC CORPORATION<br>Narragansett, Rhode Island<br>Vice President Marketing |
| 1986 - 1987 | ALBERT, BENNETT AND COMPANY, INC.<br>Providence, Rhode Island<br>President<br>Investment Banking |
| 1985 - 1987 | PRUDENTIAL BACHE INC.<br>Providence, Rhode Island<br>Stockbroker<br>Sales of stocks, municipal and corporate bonds, tax shelters. |
| 1980 - 1985 | KIDDER, PEABODY INC.<br>Providence, Rhode Island<br>Stockbroker<br>Investment sales |
| 1979 - 1980 | ATLANTA FLAMES HOCKEY CLUB, INC.<br>Birmingham, Alabama<br>Professional athlete |

**MARGARET J. MARPLE**
**CUSTOMER SERVICE MANAGER**

Ms. Marple is responsible for customer service activities. She has twenty years experience in all phases of the commercial environmental laboratory business including bench analyses, management and customer service.

**EDUCATION:**

PENNSYLVANIA STATE UNIVERSITY
Chemistry

**EXPERIENCE:**

| | |
|---|---|
| 1989 - Present | CEIMIC CORPORATION<br>Pittsburgh, Pennsylvania<br>Customer Service Manager |
| 1981 - 1989 | NUS CORPORATION<br>Pittsburgh, Pennsylvania<br>Laboratory Manager<br>Started as supervisor of the inorganic chemistry section and promoted to laboratory manager in 1983. |
| 1972 - 1981 | PENN ENVIRONMENTAL CONSULTANTS, INC.<br>Pittsburgh, Pennsylvania<br>Lab Supervisor |
| 1970 - 1972 | ENVIRONMENTAL SCIENCES, INC.<br>Pittsburgh, Pennsylvania<br>Laboratory Analyst |
| 1966 - 1969 | BITUMINOUS COAL RESEARCH<br>Monroeville, Pennsylvania<br>Researcher |

**DIANE M. KENNY**
**CUSTOMER SERVICE MANAGER**

Ms. Kenny has ten years of experience in project management, Quality Assurance/Quality Control and customer service.

**EDUCATION:**

ROCHESTER INSTITUTE OF TECHNOLOGY
B.A. Environmental Science/Chemistry

**EXPERIENCE:**

| | |
|---|---|
| 1989 - Present | CEIMIC CORPORATION<br>Narragansett, Rhode Island<br>Customer Service Manager |
| 1988 - 1989 | NANCO LABORATORIES<br>Wappingers Falls, New York<br>Marketing Representative |
| 1988 | VERSAR, ENVIRONMENTAL RISK<br>MANAGEMENT FIRM LABORATORY OPERATIONS<br>Columbia, Maryland<br>Project Manager<br>Managed commercial, government and in-house projects. Supervised data management group. Reviewed QC data. |
| 1985 - 1988 | HITTMAN EBASCO ASSOCIATES, INC.<br>Columbia, Maryland<br>QA Manager/Coordinator |
| 1980 - 1985 | PHOTOCIRCUITS<br>DIVISION OF KOLLMORGEN CORPORATION<br>Glen Cove, New York<br>Quality Control Chemist |

# Appendix F

## Ceimic Analytical Methodologies for Total Organic Carbon, Total Petroleum Hydrocarbons, and Grain Size

TOC

ENVIRONMENTAL PROTECTION AGENCY/
CORPS OF ENGINEERS
TECHNICAL COMMITTEE ON CRITERIA
FOR DREDGED AND FILL MATERIAL

# PROCEDURES FOR HANDLING AND CHEMICAL ANALYSIS OF SEDIMENT AND WATER SAMPLES

by

Russell H. Plumb, Jr.
Great Lakes Laboratory
State University College at Buffalo
1300 Elmwood Avenue
Buffalo, New York 14222

May 1981

**Prepared for** U.S. Environmental Protection Agency/Corps of Engineers Technical Committee on Criteria for Dredged and Fill Material

**Under Contract** EPA-4805572010

**Monitored by** Large Lakes Laboratory
U.S. Environmental Protection Agency
9311 Groh Road
Grosse Ile, Michigan 48138

**Published by** Environmental Laboratory
U.S. Army Engineer Waterways Experiment Station
P.O. Box 631, Vicksburg, Mississippi 39180

# Total Organic Carbon

## Procedures for Sediment Samples (S1D, S3)

Method 1: Sample Ignition

Apparatus

Induction furnace such as the Leco WR-12, Dohrmann DC-50, Coleman CH analyzer, or Perkin Elmer 240 elemental analyzer

Combustion boats

Microbalance

Desiccator

Reagents

10 percent hydrochloric acid: mix 100 ml concentrated HCl with 900 ml distilled water.

Copper oxide fines.

Benzoic acid.

Procedure

Dry at 70°C and grind the sediment sample.

Weigh a combustion boat and record the weight. Place 0.2 to 0.5 g homogenized sediment in the combustion boat and reweigh. Combustion boats should not be handled with the bare hand during this process.

If total carbon or inorganic carbon is to be determined, Cupric oxide fines may be added to the sample to assist in combustion. Combust the sample in an induction furnace. Record the result as total carbon.

If organic carbon is to be determined, treat a known weight of dried sediment with several drops of 10 percent HCl. Wait until the effervescing is completed and add more acid. Continue this process until the incremental addition of acid causes no further effervescence. Do not add too much acid at one time as this may cause loss of sample due to frothing.

Dry the sample at 70°C and place in a desiccator. Add Cupric oxide fines, combust the sample in an induction furnace, and record the result as organic carbon.

Calculations

The carbon content of the sample can be calculated as:

$$\%C = \frac{\text{weight of tube (after-before)}}{\text{sample weight}} \times 27.29$$

Derivation of factor:

$$27.29 = \frac{12.011 \text{ (molecular weight carbon)}}{44.011 \text{ (molecular weight carbon dioxide)}} \times 100\%$$

When the total sample results are used, the result is percent carbon in the sample. When acid-treated samples are used, the result is percent organic carbon. Inorganic carbon is calculated as total carbon minus organic carbon.

# PETROLEUM HYDROCARBONS, TOTAL RECOVERABLE

## Method 418.1 (Spectrophotometric, Infrared)

**STORET NO. 45501**

1. Scope and Application
   1.1 This method is for the measurement of fluorocarbon-113 extractable petroleum hydrocarbons from surface and saline waters, industrial and domestic wastes.
   1.2 The method is applicable to measurement of light fuels, although loss of about half of any gasoline present during the extraction manipulations can be expected.
   1.3 The method is sensitive to levels of 1 mg/l and less, and may be extended to ambient monitoring.
2. Summary of Method
   2.1 The sample is acidified to a low pH ( $<2$) and serially extracted with fluorocarbon-113 in a separatory funnel. Interferences are removed with silica gel adsorbant. Infrared analysis of the extract is performed by direct comparison with standards.
3. Definitions
   3.1 As in the case of Oil and Grease, the parameter of Petroleum Hydrocarbons is defined by the method. The measurement may be subject to interferences and the results should be evaluated accordingly.
   3.2 Oil and Grease is a measure of biodegradable animal greases and vegetable oils along with the relative non-biodegradable mineral oils. Petroleum hydrocarbons is the measure of only the mineral oils. Maximum information may be obtained using both methods to measure and characterize oil and grease of all sources.
4. Sampling and Storage
   4.1 A representative sample of 1 liter volume should be collected in a glass bottle. Because losses of grease will occur on sampling equipment, the collection of a composite sample is impractical. The entire sample is consumed by this test; no other analyses may be performed using aliquots of the sample.
   4.2 A delay between sampling and analysis of greater than 4 hours requires sample preservation by the addition of 5 ml HCl (6.1). A delay of greater than 48 hours also requires refrigeration for sample preservation.
5. Apparatus
   5.1 Separatory funnel, 2000 ml, with Teflon stopcock.
   5.2 Filter paper, Whatman No. 40, 11 cm.
   5.3 Infrared spectrophotometer, scanning or fixed wavelength, for measurement around 2950 $cm^{-1}$.
   5.4 Cells, 10 mm, 50 mm, and 100 mm pathlength, sodium chloride or infrared grade glass.
   5.5 Magnetic stirrer, with Teflon coated stirring bars.
6. Reagents
   6.1 Hydrochloric acid, 1:1. Mix equal volumes of conc HCl and distilled water.

Issued 1978

6.2 Fluorocarbon-113,(1,1,2-trichloro-1,2,2-trifluroethane), b.p. 48°C.

6.3 Sodium sulfate, anhydrous crystal.

6.4 Silica gel, 60–200 mesh, Davidson Grade 950 or equivalent. Should contain 1–2% water as defined by residue test at 130°C. Adjust by overnight equilibration if needed.

6.5 Calibration mixtures:

6.5.1 Reference oil: Pipet 15.0 ml n-hexadecane, 15.0 ml isooctane, and 10.0 ml chlorobenzene into a 50 ml glass stoppered bottle. Maintain the integrity of the mixture by keeping stoppered except when withdrawing aliquots.

6.5.2 Stock standard: Pipet 1.0 ml reference oil (6.5.1) into a tared 200 ml volumetric flask and immediately stopper. Weigh and dilute to volume with fluorocarbon-113.

6.5.3 Working standards: Pipet appropriate volumes of stock standard (6.5.2) into 100 ml volumetric flasks according to the cell pathlength to be used. Dilute to volume with fluorocarbon-113. Calculate concentration of standards from the stock standard.

7. Procedure

7.1 Mark the sample bottle at the water meniscus for later determination of sample volume. If the sample was not acidified at time of collection, add 5 ml hydrochloric acid (6.1) to the sample bottle. After mixing the sample, check the pH by touching pH-sensitive paper to the cap to insure that the pH is 2 or lower. Add more acid if necessary.

7.2 Pour the sample into a separatory funnel.

7.3 Add 30 ml fluorocarbon-113 (6.2) to the sample bottle and rotate the bottle to rinse the sides. Transfer the solvent into the separatory funnel. Extract by shaking vigorously for 2 minutes. Allow the layers to separate.

7.4 Filter the solvent layer through a funnel containing solvent-moistened filter paper into a 100 ml volumetric flask.

**NOTE 1:** An emulsion that fails to dissipate can be broken by pouring about 1 g sodium sulfate (6.3) into the filter paper cone and slowly draining the emulsion through the salt. Additional 1 g portions can be added to the cone as required.

7.5 Repeat (7.3 and 7.4) twice more with 30 ml portions of fresh solvent, combining all solvent into the volumetric flask.

7.6 Rinse the tip of the separatory funnel, filter paper, and the funnel with a total of 5–10 ml solvent and collect the rinsings in the flask. Dilute the extract to 100 ml. If the extract is known to contain greater than 100 mg of non-hydrocarbon organic material, pipet an appropriate portion of the sample to a 100 ml volumetric and dilute to volume.

7.7 Discard about 5–10 ml solution from the volumetric flask. Add 3 g silica gel (6.4) and a stirring bar; stopper the volumetric flask, and stir the solution for a minimum of 5 min on a magnetic stirrer.

7.8 Select appropriate working standards and cell pathlength according to the following table of approximate working ranges:

| Pathlength | Range |
|---|---|
| 10 mm | 2–40 mg |
| 50 mm | 0.5–8 mg |
| 100 mm | 0.1–4 mg |

Calibrate the instrument for the appropriate cells using a series of working standards (6.5.3). It is not necessary to add silica gel to the standards. Determine absorbance directly for each solution at the absorbance maximum at about 2930 $cm^{-1}$. Prepare a calibration plot of absorbance vs. mg petroleum hydrocarbons per 100 ml solution.

7.9 After the silica gel has settled in the sample extract, fill a clean cell with solution and determine the absorbance of the extract. If the absorbance exceeds 0.8 prepare an appropriate dilution.

**NOTE 2:** The possibility that the absorptive capacity of the silica gel has been exceeded can be tested at this point by adding another 3.0 g silica gel to the extract and repeating the treatment and determination.

7.10 Determine the concentration of petroleum hydrocarbons in the extract by comparing the response against the calibration plot.

8. Calculations

8.1 Calculate the petroleum hydrocarbons in the sample using the formula:

$$\text{mg/l Petroleum Hydrocarbons} = \frac{R \times D}{V}$$

where:

R = mg of Petroleum Hydrocarbons as determined from the calibration plot (7.10).
D = extract dilution factor, if used.
V = volume of sample, in liters.

9. Precision and Accuracy

9.1 Precision and accuracy data are not available at this time.

Designation: D 422 - 63 (Reapproved 1972)[ε1]

# Standard Method for Particle-Size Analysis of Soils[1]

This standard is issued under the fixed designation D 422; the number immediately following the designation indicates the year of original adoption or, in the case of revision, the year of last revision. A number in parentheses indicates the year of last reapproval. A superscript epsilon (ε) indicates an editorial change since the last revision or reapproval.

[ε1] NOTE—Section 2 was added editorially and subsequent sections renumbered in July 1984.

## 1. Scope

1.1 This method covers the quantitative determination of the distribution of particle sizes in soils. The distribution of particle sizes larger than 75 μm (retained on the No. 200 sieve) is determined by sieving, while the distribution of particle sizes smaller than 75 μm is determined by a sedimentation process, using a hydrometer to secure the necessary data (Notes 1 and 2).

NOTE 1—Separation may be made on the No. 4 (4.75-mm), No. 40 (425-μm), or No. 200 (75-μm) sieve instead of the No. 10. For whatever sieve used, the size shall be indicated in the report.

NOTE 2—Two types of dispersion devices are provided: (*1*) a high-speed mechanical stirrer, and (*2*) air dispersion. Extensive investigations indicate that air-dispersion devices produce a more positive dispersion of plastic soils below the 20-μm size and appreciably less degradation on all sizes when used with sandy soils. Because of the definite advantages favoring air dispersion, its use is recommended. The results from the two types of devices differ in magnitude, depending upon soil type, leading to marked differences in particle size distribution, especially for sizes finer than 20 μm.

## 2. Referenced Documents

2.1 *ASTM Standards:*

D 421 Practice for Dry Preparation of Soil Samples for Particle-Size Analysis and Determination of Soil Constants[2]

E 11 Specification for Wire-Cloth Sieves for Testing Purposes[3]

E 100 Specification for ASTM Hydrometers[4]

## 3. Apparatus

3.1 *Balances*—A balance sensitive to 0.01 g for weighing the material passing a No. 10 (2.00-mm) sieve, and a balance sensitive to 0.1 % of the mass of the sample to be weighed for weighing the material retained on a No. 10 sieve.

3.2 *Stirring Apparatus*—Either apparatus A or B may be used.

3.2.1 Apparatus A shall consist of a mechanically operated stirring device in which a suitably mounted electric motor turns a vertical shaft at a speed of not less than 10 000 rpm without load. The shaft shall be equipped with a replaceable stirring paddle made of metal, plastic, or hard rubber, as shown in Fig. 1. The shaft shall be of such length that the stirring paddle will operate not less than ¾ in. (19.0 mm) nor more than 1½ in. (38.1 mm) above the bottom of the dispersion cup. A special dispersion cup conforming to either of the designs shown in Fig. 2 shall be provided to hold the sample while it is being dispersed.

3.2.2 Apparatus B shall consist of an air-jet dispersion cup[5] (Note 3) conforming to the general details shown in Fig. 3 (Notes 4 and 5).

NOTE 3—The amount of air required by an air-jet dispersion cup is of the order of 2 $ft^3$/min; some small air compressors are not capable of supplying sufficient air to operate a cup.

NOTE 4—Another air-type dispersion device, known as a dispersion tube, developed by Chu and Davidson at Iowa State College, has been shown to give results equivalent to those secured by the air-jet dispersion cups. When it is used, soaking of the sample can be done in the sedimentation cylinder, thus eliminating the need for transferring the slurry. When the air-dispersion tube is used, it shall be so indicated in the report.

NOTE 5—Water may condense in air lines when not in use. This water must be removed, either by using a water trap on the air line, or by blowing the water out of the line before using any of the air for dispersion purposes.

3.3 *Hydrometer*—An ASTM hydrometer, graduated to read in either specific gravity of the suspension or grams per litre of suspension, and conforming to the requirements for hydrometers 151H or 152H in Specifications E 100. Dimensions of both hydrometers are the same, the scale being the only item of difference.

3.4 *Sedimentation Cylinder*—A glass cylinder essentially 18 in. (457 mm) in height and 2½ in. (63.5 mm) in diameter, and marked for a volume of 1000 mL. The inside diameter shall be such that the 1000-mL mark is 36 ± 2 cm from the bottom on the inside.

3.5 *Thermometer*—A thermometer accurate to 1°F (0.5°C).

3.6 *Sieves*—A series of sieves, of square-mesh woven-wire cloth, conforming to the requirements of Specification E 11. A full set of sieves includes the following (Note 6):

[1] This method is under the jurisdiction of ASTM Committee D-18 on Soil and Rock and is the direct responsibility of Subcommittee D18.03 on Texture, Plasticity, and Density Characteristics of Soils.

Current edition approved Nov. 21, 1963. Originally published 1935. Replaces D 422 - 62.

[2] *Annual Book of ASTM Standards*, Vol 04.08.

[3] *Annual Book of ASTM Standards*, Vol 14.02.

[4] *Annual Book of ASTM Standards*, Vol 14.01.

[5] Detailed working drawings for this cup are available at a nominal cost from the American Society for Testing and Materials, 1916 Race St., Philadelphia, PA 19103. Order Adjunct No. 12-404220-00.

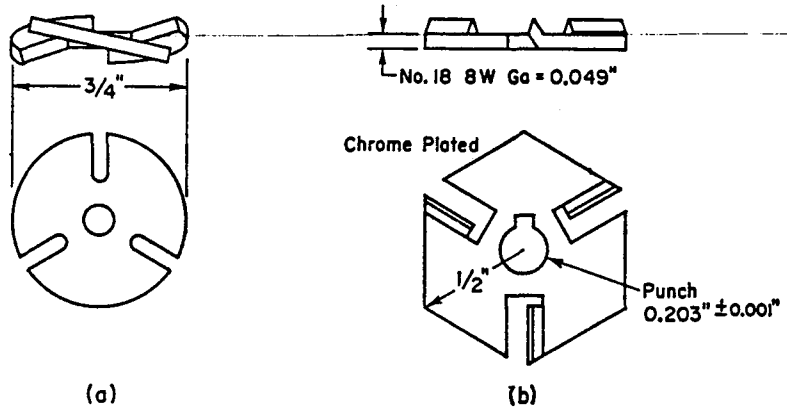


| Metric Equivalents | | | | | |
|---|---|---|---|---|---|
| in. | 0.001 | 0.049 | 0.203 | ½ | ¾ |
| mm | 0.03 | 1.24 | 5.16 | 12.7 | 19.0 |

**FIG. 1 Detail of Stirring Paddles**

| | |
|---|---|
| 3-in. (75-mm) | No. 10 (2.00-mm) |
| 2-in. (50-mm) | No. 20 (850-µm) |
| 1½-in. (37.5-mm) | No. 40 (425-µm) |
| 1-in. (25.0-mm) | No. 60 (250-µm) |
| ¾-in. (19.0-mm) | No. 140 (106-µm) |
| ⅜-in. (9.5-mm) | No. 200 (75-µm) |
| No. 4 (4.75-mm) | |

NOTE 6—A set of sieves giving uniform spacing of points for the graph, as required in Section 17, may be used if desired. This set consists of the following sieves:

| | |
|---|---|
| 3-in. (75-mm) | No. 16 (1.18-mm) |
| 1½-in. (37.5-mm) | No. 30 (600-µm) |
| ¾-in. (19.0-mm) | No. 50 (300-µm) |
| ⅜-in. (9.5-mm) | No. 100 (150-µm) |
| No. 4 (4.75-mm) | No. 200 (75-µm) |
| No. 8 (2.36-mm) | |

3.7 *Water Bath or Constant-Temperature Room*—A water bath or constant-temperature room for maintaining the soil suspension at a constant temperature during the hydrometer analysis. A satisfactory water tank is an insulated tank that maintains the temperature of the suspension at a convenient constant temperature at or near 68°F (20°C). Such a device is illustrated in Fig. 4. In cases where the work is performed in a room at an automatically controlled constant temperature, the water bath is not necessary.

3.8 *Beaker*—A beaker of 250-mL capacity.

3.9 *Timing Device*—A watch or clock with a second hand.

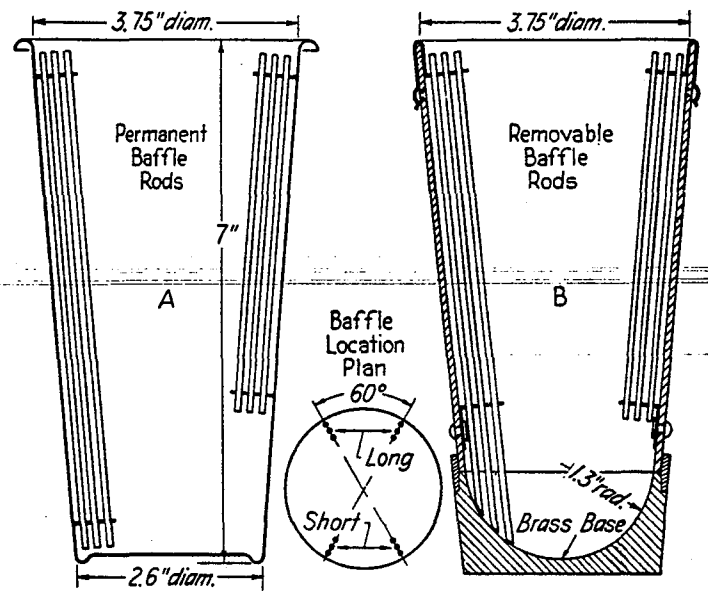


| Metric Equivalents | | | |
|---|---|---|---|
| in. | 1.3 | 2.6 | 3.75 |
| mm | 33 | 66 | 95.2 |

**FIG. 2 Dispersion Cups of Apparatus**

## 4. Dispersing Agent

4.1 A solution of sodium hexametaphosphate (sometimes called sodium metaphosphate) shall be used in distilled or demineralized water, at the rate of 40 g of sodium hexametaphosphate/litre of solution (Note 7).

NOTE 7—Solutions of this salt, if acidic, slowly revert or hydrolyze back to the orthophosphate form with a resultant decrease in dispersive action. Solutions should be prepared frequently (at least once a month) or adjusted to pH of 8 or 9 by means of sodium carbonate. Bottles containing solutions should have the date of preparation marked on them.

4.2 All water used shall be either distilled or demineralized water. The water for a hydrometer test shall be brought to the temperature that is expected to prevail during the hydrometer test. For example, if the sedimentation cylinder is to be placed in the water bath, the distilled or demineralized water to be used shall be brought to the temperature of the controlled water bath; or, if the sedimentation cylinder is used in a room with controlled temperature, the water for the test shall be at the temperature of the room. The basic temperature for the hydrometer test is 68°F (20°C). Small variations of temperature do not introduce differences that are of practical significance and do not prevent the use of corrections derived as prescribed.

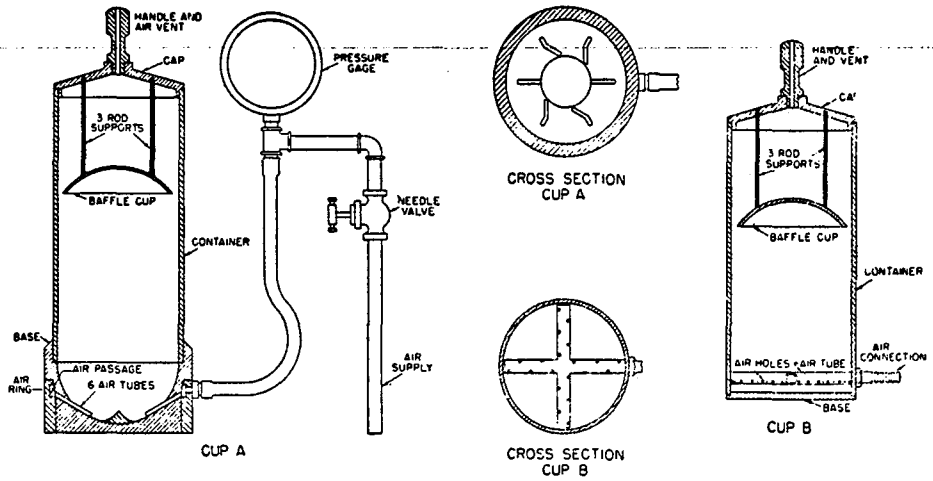


**FIG. 3 Air-Jet Dispersion Cups of Apparatus B**

## 5. Test Sample

5.1 Prepare the test sample for mechanical analysis as outlined in Practice D 421. During the preparation procedure the sample is divided into two portions. One portion contains only particles retained on the No. 10 (2.00-mm) sieve while the other portion contains only particles passing the No. 10 sieve. The mass of air-dried soil selected for purpose of tests, as prescribed in Practice D 421, shall be sufficient to yield quantities for mechanical analysis as follows:

5.1.1 The size of the portion retained on the No. 10 sieve shall depend on the maximum size of particle, according to the following schedule:

| Nominal Diameter of Largest Particles, in. (mm) | Approximate Minimum Mass of Portion, g |
|---|---|
| ⅜ (9.5) | 500 |
| ¾ (19.0) | 1000 |
| 1 (25.4) | 2000 |
| 1½ (38.1) | 3000 |
| 2 (50.8) | 4000 |
| 3 (76.2) | 5000 |

5.1.2 The size of the portion passing the No. 10 sieve shall be approximately 115 g for sandy soils and approximately 65 g for silt and clay soils.

5.2 Provision is made in Section 5 of Practice D 421 for weighing of the air-dry soil selected for purpose of tests, the separation of the soil on the No. 10 sieve by dry-sieving and washing, and the weighing of the washed and dried fraction retained on the No. 10 sieve. From these two masses the percentages retained and passing the No. 10 sieve can be calculated in accordance with 12.1.

NOTE 8—A check on the mass values and the thoroughness of pulverization of the clods may be secured by weighing the portion passing the No. 10 sieve and adding this value to the mass of the washed and oven-dried portion retained on the No. 10 sieve.

### SIEVE ANALYSIS OF PORTION RETAINED ON NO. 10 (2.00-mm) SIEVE

## 6. Procedure

6.1 Separate the portion retained on the No. 10 (2.00-mm) sieve into a series of fractions using the 3-in. (75-mm), 2-in. (50-mm), 1½-in. (37.5-mm), 1-in. (25.0-mm), ¾-in. (19.0-mm), ⅜-in. (9.5-mm), No. 4 (4.75-mm), and No. 10 sieves, or as many as may be needed depending on the sample, or upon the specifications for the material under test.

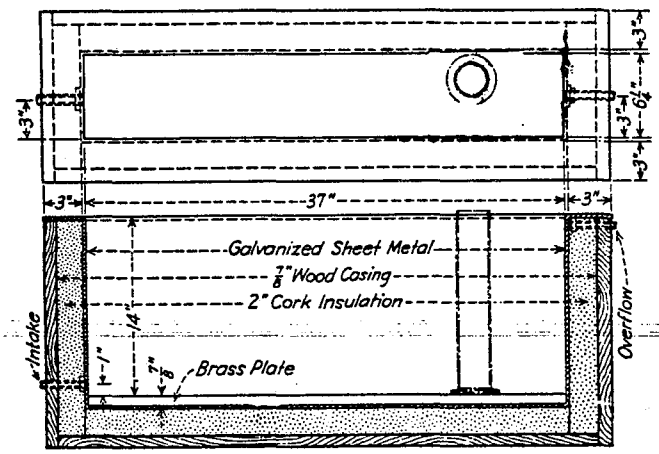


**Metric Equivalents**

| | | | | | | |
|---|---|---|---|---|---|---|
| in. | ⅞ | 1 | 3 | 6¼ | 14 | 37 |
| mm | 22.2 | 25.4 | 76.2 | 158.2 | 356 | 940 |

**FIG. 4 Insulated Water Bath**

6.2 Conduct the sieving operation by means of a lateral and vertical motion of the sieve, accompanied by a jarring action in order to keep the sample moving continuously over the surface of the sieve. In no case turn or manipulate fragments in the sample through the sieve by hand. Continue sieving until not more than 1 mass % of the residue on a sieve passes that sieve during 1 min of sieving. When mechanical sieving is used, test the thoroughness of sieving by using the hand method of sieving as described above.

6.3 Determine the mass of each fraction on a balance conforming to the requirements of 3.1. At the end of weighing, the sum of the masses retained on all the sieves used should equal closely the original mass of the quantity sieved.

where:

$D$ = diameter of particle, mm,

$n$ = coefficient of viscosity of the suspending medium (in this case water) in poises (varies with changes in temperature of the suspending medium),

$L$ = distance from the surface of the suspension to the level at which the density of the suspension is being measured, cm. (For a given hydrometer and sedimentation cylinder, values vary according to the hydrometer readings. This distance is known as effective depth (Table 2)),

$T$ = interval of time from beginning of sedimentation to the taking of the reading, min,

$G$ = specific gravity of soil particles, and

$G_l$ = specific gravity (relative density) of suspending medium (value may be used as 1.000 for all practical purposes).

NOTE 14—Since Stokes' law considers the terminal velocity of a single sphere falling in an infinity of liquid, the sizes calculated represent the diameter of spheres that would fall at the same rate as the soil particles.

15.2 For convenience in calculations the above equation may be written as follows:

$$D = K\sqrt{L/T}$$

where:

$K$ = constant depending on the temperature of the suspension and the specific gravity of the soil particles. Values of $K$ for a range of temperatures and specific gravities are given in Table 3. The value of $K$ does not change for a series of readings constituting a test, while values of $L$ and $T$ do vary.

15.3 Values of $D$ may be computed with sufficient accuracy, using an ordinary 10-in. slide rule.

NOTE 15—The value of $L$ is divided by $T$ using the $A$- and $B$-scales, the square root being indicated on the $D$-scale. Without ascertaining the value of the square root it may be multiplied by $K$, using either the $C$- or $CI$-scale.

## 16. Sieve Analysis Values for Portion Finer than No. 10 (2.00-mm) Sieve

16.1 Calculation of percentages passing the various sieves used in sieving the portion of the sample from the hydrometer test involves several steps. The first step is to calculate the mass of the fraction that would have been retained on the No. 10 sieve had it not been removed. This mass is equal to the total percentage retained on the No. 10 sieve (100 minus total percentage passing) times the mass of the total sample represented by the mass of soil used (as calculated in 14.2), and the result divided by 100.

16.2 Calculate next the total mass passing the No. 200 sieve. Add together the fractional masses retained on all the sieves, including the No. 10 sieve, and subtract this sum from the mass of the total sample (as calculated in 14.2).

16.3 Calculate next the total masses passing each of the other sieves, in a manner similar to that given in 12.2.

16.4 Calculate last the total percentages passing by dividing the total mass passing (as calculated in 16.3) by the total mass of sample (as calculated in 14.2), and multiply the result by 100.

**TABLE 2 Values of Effective Depth Based on Hydrometer and Sedimentation Cylinder of Specified Sizes[A]**

| Hydrometer 151H | | Hydrometer 152H | | | |
|---|---|---|---|---|---|
| Actual Hydrometer Reading | Effective Depth, $L$, cm | Actual Hydrometer Reading | Effective Depth, $L$, cm | Actual Hydrometer Reading | Effective Depth, $L$, cm |
| 1.000 | 16.3 | 0 | 16.3 | 31 | 11.2 |
| 1.001 | 16.0 | 1 | 16.1 | 32 | 11.1 |
| 1.002 | 15.8 | 2 | 16.0 | 33 | 10.9 |
| 1.003 | 15.5 | 3 | 15.8 | 34 | 10.7 |
| 1.004 | 15.2 | 4 | 15.6 | 35 | 10.6 |
| 1.005 | 15.0 | 5 | 15.5 | | |
| 1.006 | 14.7 | 6 | 15.3 | 36 | 10.4 |
| 1.007 | 14.4 | 7 | 15.2 | 37 | 10.2 |
| 1.008 | 14.2 | 8 | 15.0 | 38 | 10.1 |
| 1.009 | 13.9 | 9 | 14.8 | 39 | 9.9 |
| 1.010 | 13.7 | 10 | 14.7 | 40 | 9.7 |
| 1.011 | 13.4 | 11 | 14.5 | 41 | 9.6 |
| 1.012 | 13.1 | 12 | 14.3 | 42 | 9.4 |
| 1.013 | 12.9 | 13 | 14.2 | 43 | 9.2 |
| 1.014 | 12.6 | 14 | 14.0 | 44 | 9.1 |
| 1.015 | 12.3 | 15 | 13.8 | 45 | 8.9 |
| 1.016 | 12.1 | 16 | 13.7 | 46 | 8.8 |
| 1.017 | 11.8 | 17 | 13.5 | 47 | 8.6 |
| 1.018 | 11.5 | 18 | 13.3 | 48 | 8.4 |
| 1.019 | 11.3 | 19 | 13.2 | 49 | 8.3 |
| 1.020 | 11.0 | 20 | 13.0 | 50 | 8.1 |
| 1.021 | 10.7 | 21 | 12.9 | 51 | 7.9 |
| 1.022 | 10.5 | 22 | 12.7 | 52 | 7.8 |
| 1.023 | 10.2 | 23 | 12.5 | 53 | 7.6 |
| 1.024 | 10.0 | 24 | 12.4 | 54 | 7.4 |
| 1.025 | 9.7 | 25 | 12.2 | 55 | 7.3 |
| 1.026 | 9.4 | 26 | 12.0 | 56 | 7.1 |
| 1.027 | 9.2 | 27 | 11.9 | 57 | 7.0 |
| 1.028 | 8.9 | 28 | 11.7 | 58 | 6.8 |
| 1.029 | 8.6 | 29 | 11.5 | 59 | 6.6 |
| 1.030 | 8.4 | 30 | 11.4 | 60 | 6.5 |
| 1.031 | 8.1 | | | | |
| 1.032 | 7.8 | | | | |
| 1.033 | 7.6 | | | | |
| 1.034 | 7.3 | | | | |
| 1.035 | 7.0 | | | | |
| 1.036 | 6.8 | | | | |
| 1.037 | 6.5 | | | | |
| 1.038 | 6.2 | | | | |

[A] Values of effective depth are calculated from the equation:

$$L = L_1 + \tfrac{1}{2}[L_2 - (V_B/A)]$$

where:

$L$ = effective depth, cm,

$L_1$ = distance along the stem of the hydrometer from the top of the bulb to the mark for a hydrometer reading, cm,

$L_2$ = overall length of the hydrometer bulb, cm,

$V_B$ = volume of hydrometer bulb, $cm^3$, and

$A$ = cross-sectional area of sedimentation cylinder, $cm^2$

Values used in calculating the values in Table 2 are as follows:

For both hydrometers, 151H and 152H:

$L_2$ = 14.0 cm

$V_B$ = 67.0 $cm^3$

$A$ = 27.8 $cm^2$

For hydrometer 151H:

$L_1$ = 10.5 cm for a reading of 1.000

= 2.3 cm for a reading of 1.031

For hydrometer 152H:

$L_1$ = 10.5 cm for a reading of 0 g/litre

= 2.3 cm for a reading of 50 g/litre

## 17. Graph

17.1 When the hydrometer analysis is performed, a graph