N00102.AR.001820
NSY PORTSMOUTH
5090.3a

GROUNDWATER MONITORING PLAN FOR THE INDUSTRIAL WASTE TREATMENT PLANT

NSY PORTSMOUTH ME

4/20/1994

CT MALE ASSOCIATES

1648

C.T. MALE ASSOCIATES, P.C.

50 Century Hill Drive
P.O. Box 727
Latham, New York 12110
(518) 786-7400
FAX (518) 786-7299

Engineering
Land Surveying
Architecture
Landscape Architecture
Environmental Services
Computer Services

GROUNDWATER MONITORING PLAN FOR THE INDUSTRIAL WASTE TREATMENT PLANT PORTSMOUTH NAVAL SHIPYARD KITTERY, MAINE

APRIL 20, 1994

Prepared by:

C.T. MALE ASSOCIATES, P.C.
50 Century Hill Drive
P.O. Box 727
Latham, New York 12110
(518) 786-7400
CTMA Project No. 94.4036

UNAUTHORIZED ALTERATION OR ADDITION TO THIS DOCUMENT IS A VIOLATION OF SECTION 7209 SUBDIVISION 2 OF THE NEW YORK STATE EDUCATION LAW.

COPYRIGHT 1994
C. T. MALE ASSOCIATES, P.C.

GROUNDWATER MONITORING PLAN FOR THE INDUSTRIAL WASTE TREATMENT PLANT PORTSMOUTH NAVAL SHIPYARD KITTERY, MAINE

TABLE OF CONTENTS

PAGE

1.0 INTRODUCTION 1

2.0 SITE CHARACTERISTICS AND HISTORY 2
- 2.1 Site Location and Description 2
- 2.2 Regional Geology 3
- 2.3 Site Geology and Hydrogeology 3
- 2.4 Site History 4
- 2.5 Background Soil and Groundwater Quality 6

3.0 MONITORING WELL INSTALLATIONS 10
- 3.1 Objective 10
- 3.2 Monitoring Well Locations 10
- 3.3 Supervision of Drilling Operations and Monitoring Well Installations 11
- 3.4 Drilling and Sampling of Overburden 12
- 3.5 Soil Sampling 13
- 3.6 Rock Coring Procedures 14
- 3.7 Overburden Monitoring Well Installation 15
- 3.8 Bedrock Monitoring Well Installation 16
- 3.9 Monitoring Well Development 16
- 3.10 Decontamination of Drilling, Well Construction and Sampling Equipment 17
- 3.11 Corrective Action Measures 19

4.0 GROUNDWATER SAMPLING AND ANALYSIS PLAN 21
- 4.1 General 21
- 4.2 Preparation for Sampling 21
- 4.3 Measuring the Water Level 23
- 4.4 Well Evacuation/Purging Procedures 23
- 4.5 Sampling Procedures 24
- 4.6 Field Analyses 27
- 4.7 Laboratory Analyses 28

GROUNDWATER MONITORING PLAN FOR THE INDUSTRIAL WASTE TREATMENT PLANT PORTSMOUTH NAVAL SHIPYARD KITTERY, MAINE

TABLE OF CONTENTS
(continued)

PAGE

4.0 GROUNDWATER SAMPLING AND ANALYSIS PLAN (continued)
- 4.8 Quality Control Procedures 29
  - 4.8.1 Field Quality Control
  - 4.8.2 Laboratory Quality Control
  - 4.8.3 Data Validation
- 4.9 Sample Handling and Chain of Custody Procedures 33
- 4.10 Data Reporting 34

5.0 HEALTH AND SAFETY PLAN (HASP) 36

REFERENCES 37

TABLES

TABLE 2-1: SUMMARY OF WASTES TYPICALLY TREATED AT THE INDUSTRIAL WASTE TREATMENT PLANT 5

TABLE 2-2: SUMMARY OF ANALYTES DETECTED IN GROUNDWATER IN AREA OF IWTP IN EXCEEDANCE OF PROPOSED FEDERAL ACTION LEVELS AND/OR NATIONAL PRIMARY DRINKING WATER REGULATIONS 7

TABLE 2-3: SUMMARY OF SITE AREA SOIL SAMPLES IN EXCEEDANCE OF FEDERAL ACTION LEVELS AND/OR NEW JERSEY ECRA GUIDANCE VALUES 9

TABLE 4-1: CONTAINER TYPE, CAP TYPE AND PRESERVATIVE REQUIRED PER ANALYSIS PARAMETER 22

GROUNDWATER MONITORING PLAN FOR THE INDUSTRIAL WASTE TREATMENT PLANT PORTSMOUTH NAVAL SHIPYARD KITTERY, MAINE

TABLE OF CONTENTS
(continued)

PAGE

TABLES
(continued)

TABLE 4-2: SUMMARY OF LABORATORY ANALYSES TO BE PERFORMED AND FREQUENCY 28

TABLE 4-3: ANALYTICAL PARAMETERS, SAMPLE PREPARATION AND ANALYSIS METHODS 30

FIGURES

FIGURE 1: SITE LOCATION MAP

FIGURE 2: SITE PLAN MAP - INDUSTRIAL WASTE TREATMENT PLANT

FIGURE 3: TYPICAL OVERBURDEN WELL INSTALLATION

FIGURE 4: TYPICAL BEDROCK WELL INSTALLATION

APPENDICES

APPENDIX A: TEST BORING/MONITORING WELL CONSTRUCTION LOG FOR EXISTING WELL DW-03

APPENDIX B: FIELD DATA AND SAMPLING QUALITY ASSURANCE/QUALITY CONTROL FORMS

APPENDIX C: CTM ANALYTICAL LABORATORIES, LTD. QUALITY ASSURANCE PROGRAM PLAN

APPENDIX D: PROPOSED FEDERAL ACTION LEVELS AND STATE OF MAINE MAXIMUM EXPOSURE GUIDELINES

APPENDIX E: CONDENSED HEALTH AND SAFETY PLAN

APPENDIX F: GROUNDWATER SAMPLING HEALTH AND SAFETY PLAN

GROUNDWATER MONITORING PLAN FOR THE INDUSTRIAL WASTE TREATMENT PLANT PORTSMOUTH NAVAL SHIPYARD KITTERY, MAINE

TABLE OF CONTENTS
(continued)

ATTACHMENTS

SITE SPECIFIC HEALTH AND SAFETY PLAN FOR IMPLEMENTATION OF GROUNDWATER MONITORING PLAN AT THE INDUSTRIAL WASTE TREATMENT PLANT, PORTSMOUTH NAVAL SHIPYARD, DATED APRIL 20, 1994

1.0 INTRODUCTION

This document is the Groundwater Monitoring Plan (GMP) for the Industrial Waste Treatment Plant (IWTP) facility at the Portsmouth Naval Shipyard located in Kittery, Maine. The purpose of the GMP is to develop and implement a program to monitor for the non-sudden releases of hazardous substance from the IWTP. The GMP was prepared under the supervision of an American Institute of Professional Geologist Certified Professional Geologist (CPG). This individual is currently pursuing licensure in the State of Maine.

Section 2.0 of this document provides a description of site characteristics and a history. Included in this section are a description of the site, discussions of site geology and hydrogeology, history of the IWTP and a summary of previous soil and groundwater sampling detections in the vicinity of the IWTP detected during performance of a RCRA Facility Investigation in 1991 of the Defense Reutilization Management Office facility.

Section 3.0 presents the methodology and design details of the monitoring well installations. This section includes the rationale for monitoring well locations, specifics on borehole drilling, sampling and monitoring well design, and supervision of site activities.

A detailed groundwater Sampling and Analysis Plan (SAP) is presented in Section 4.0. Included in the SAP are specific procedures to perform groundwater sampling including monitoring well purging, water level measurements, sampling procedures, field analyses, laboratory analyses, quality control procedures, sample handling, and data reporting.

Section 5.0 discusses health and safety procedures during implementation of the Groundwater Monitoring Plan.

2.0 SITE CHARACTERISTICS AND HISTORY

2.1 Site Location and Description

The Portsmouth Naval Shipyard (PNS) is located within the Town of Kittery, Maine on Seavey Island on the north shore of the Piscataqua River. Seavey Island is located at the mouth of the Great Bay Estuary approximately two miles from the Atlantic Ocean.

The PNS originally consisted of four separate islands; Fernald's, Seavey, Pumpkin and Jamaica. Development of PNS facilities necessitated the filling of low lying tidal flats subsequently connecting the islands to form one contiguous land mass. The present Shipyard consists of 376 buildings on 278 acres of land known as Seavey Island.

The Industrial Waste Treatment Plant (IWTP), identified as Building 298, is located at the southern end of Seavey Island on fill or "made lands." The location of the IWTP on Seavey Island is shown on the Site Location Map presented as Figure 1. Figure 2 presents a site plan of the IWTP and surrounding features. The IWTP site is bordered by the Defense Reutilization Management Office (DRMO) Storage yard to the northwest, west and south; by the Piscataqua River to the southeast; by an access road and parking area to the north; and by Buildings 310 and 314 to the east and northeast.

The IWTP is accessible by vehicle from the roadway north of the site. The majority of the land surface surrounding the building is paved, with small areas along the building's face covered with crushed stone. Relief is characterized by steep slopes at the north end of the site trending south to the Piscataqua River.

The IWTP consists of a 14,700± square foot, 2 story masonry structure housing facilities for the treatment of aqueous wastes contaminated with heavy metals. A batch treatment process precipitates the metals through pH adjustment and chemical addition, and then the effluent is neutralized prior to being discharged to the Town of Kittery municipal sanitary sewer. Sludge generated during

treatment is disposed of off-site as non-hazardous waste based on chemical analytical characterization.

Wastes are delivered from the various on-site generators via a tank truck, to the transfer area at the northwest side of the structure. The transfer area is fitted with a secondary containment system capable of containing accidental releases during waste handling.

2.2 Regional Geology

The Portsmouth area is located in the Seaboard Lowland Section of the New England physiographic province. Characterized as an embayed coastline typical of the Maine coastal area, the area is the result of the submergence of a fluvially eroded landmass.

Thin surficial deposits of till and recent alluvium overlay volcanic and metamorphosed sedimentary bedrock. Bedrock has been subjected to several deformation sequences and contains a rather complex fracture pattern.

2.3 Site Geology and Hydrogeology

The information in this section was compiled from the RCRA Facility Investigation Report prepared by McClaren and Hart (1991) on the Defense Reutilization Management Office (DRMO) facility, and from geotechnical borings performed for construction of the IWTP facility.

Bedrock underlying the area surrounding the IWTP consists of metamorphosed sedimentary rock of Silurian age from the Kittery Formation. Information from test boring logs prepared by McClaren and Hart (1991) interpreted the bedrock as dark gray to greenish gray fine grained metamorphic rock, with mica observed along fracture planes and occasional secondary crystallization of pyrite in fractures. Bedrock was encountered approximately 26 feet below the ground surface approximately 30 feet west of the southeast corner of Building 298 (DW-3). The uppermost 10 feet of bedrock was described as heavily weathered. The depth to bedrock from the ground surface is anticipated to decrease at the area north of

Building 298, based on site observation and interpolation of geologic cross-section data.

Results of fracture trace analysis performed for the RCRA Facility Investigation do not indicate the presence of a major fracture trace or lineament beneath the IWTP site.

Overburden material mantling the bedrock surface is highly variable in composition. Descriptions of materials encountered include fill consisting of wood, sand, cinders, and rock fragments (blasting debris). Thickness of the overburden varies across the site from 12 to 26 feet.

Groundwater was encountered approximately 10 to 12 feet below the ground surface in the vicinity of the IWTP. Groundwater was interpreted as flowing directly south to the Piscataqua River. Hydraulic gradients were approximated at 0.13 ft/ft near the IWTP.

Estimates prepared as part of the RCRA Facility Investigation indicate hydraulic conductivities of the overburden on the order of 10^{-2} cm/sec. McClaren and Hart (1991) indicate similar hydraulic conductivity values for the bedrock encountered and suggest a high degree of communication between the bedrock and overburden aquifers.

Stormwater runoff is either captured by site area catch basins and discharged to the Piscataqua River or is subject to direct overland flow to the river.

2.4 Site History

The Industrial Waste Treatment Plant was constructed in 1973 on fill materials or "made lands" to treat acids, alkalis and aqueous wastes contaminated with heavy metals. The facility was also designed to treat cyanide containing wastes, but due to operational changes at the Shipyard cyanide wastes were never treated. Waste streams previously handled and treated at the IWTP in addition to those currently treated contained ammonia, ethyldiaminetetraacetic acid (EDTA), hydrazine and heavy metals.

Currently the IWTP treats liquid wastes generated from metal surface and parts cleaning, and the flushings of boiler equipment and piping systems. A summary of the current waste streams treated at the IWTP and the contaminants found in the wastes is presented in Table 2-1.

TABLE 2-1: SUMMARY OF CONTAMINANTS FOUND IN WASTES TYPICALLY TREATED AT THE INDUSTRIAL WASTE TREATMENT PLANT (IWTP)

WASTE NAME	CONSTITUENT(S)	APPLICABLE EPA WASTE CODE(S)
Caustic Cleaner	Sodium, Hydroxide, Cadmium, Lead, Selenium, Aluminum, Copper, Iron, Manganese, Nickel, Tin, Zinc	D002, D006, D008, D010
Inhibited Muriatic Acid	Hydrochloric Acid, Cadmium, Lead, Mercury, Silver, Aluminum, Copper, Iron, Manganese, Nickel, Tin, Zinc	D002, D006, D008, D009, D010
TSP Solution	Trisodium Phosphate, Lead, Aluminum, Copper, Iron, Manganese, Nickel	D002, D008
Sulfamic Acid Solution	Sulfamic Acid, Arsenic, Cadmium, Chromium, Lead, Aluminum, Copper, Iron, Manganese, Nickel, Tin, Zinc	D002, D004, D006, D007, D008
Alkaline Degreaser	Sodium Hydroxide, Chromium, Aluminum, Copper, Iron, Nickel, Tin, Zinc	D007
Acid Tank	Phosphoric Acid, Arsenic	D002, D004
Fireside Tank	Soot, Arsenic, Cadmium, Chromium, Lead, Selenium, Aluminum, Copper, Iron, Manganese, Nickel, Tin, Zinc	D002, D004, D006, D007, D008, D010
Off-Spec & Expired Shelf-Life Wastes from Hazardous Waste Storage Facility		D002

Waste streams handled/treated at the IWTP have contained varying concentrations of the contaminants due to ongoing Shipyard operational modifications.

2.5 Background Soil and Groundwater Quality

Previous soil and groundwater contaminant detections in the vicinity of the IWTP will be utilized in the interpretation of the groundwater analyses to be performed during the implementation of the GMP. A RCRA Facility Investigation of Solid Waste Management Units (SWMU) was conducted at the Portsmouth Naval Shipyard in 1991 by McClaren and Hart. One of the SWMUs investigated was the Defense Reutilization Management Office (DRMO) facility located south and west of and adjacent to the IWTP facility (refer to Figure 2). Monitoring wells were installed and soil and groundwater samples were analyzed to characterize the nature and extent of any releases of hazardous substances to the environment, and to determine the impact to soil and groundwater from the DRMO operations. The background soil and groundwater quality data currently available is a result of the RCRA Facility Investigation of the DRMO site.

Monitoring wells were installed during the implementation of the RCRA Facility Investigation. Those monitoring wells in the immediate vicinity of the IWTP are shown on Figure 2. Monitoring well DW-03 is located directly downgradient of the IWTP, and borders the DRMO storage yard. Monitoring wells DW-08 and DW-08B are located approximately 100 feet east of and cross gradient to the IWTP.

Groundwater samples were analyzed for Target Compound List organics and inorganics as part of the RCRA Facility Investigation, and the results identified low levels of PCB's, heavy metals and trace amounts of volatile organics. Table 2-2 presents a summary of those detections that were in exceedance of proposed Federal Action Levels and/or National Primary Drinking Water Regulations. The State of Maine's Maximum Exposure Guidelines (MEGs) are presented for comparison purposes. The majority of the contaminant detections were observed in DW-08 cross gradient of the IWTP. McClaren and Hart (1991) attributed these detections to the DRMO site and the nature of the fill materials in the area. Antimony, lead and selenium were detected in samples from the downgradient well DW-03.

TABLE 2-2: SUMMARY OF ANALYTES DETECTED IN GROUNDWATER IN AREA OF IWTP IN EXCEEDANCE OF PROPOSED FEDERAL ACTION LEVELS AND/OR NATIONAL PRIMARY DRINKING WATER REGULATIONS

	LOCATION AND CONCENTRATION (ug/l)						
PARAMETER	DW-03	DW-08	DW-08B	DW-09	FAL(1) ug/l	NPWR(2) ug/l	MAINE(3) MEGs
VOLATILES							
1,1 Dichloroethene (DCE)	--	--	18(05)	--	7	7	7
Chloroform	--	--	6(04)	--	6	--	--
INORGANICS							
Antimony	29.9Q	609(04)	--	309	10	NA	--
Arsenic	--	66.6(04)	--	--	50	50	--
Barium	--	1650(04)	--	--	1000	1000	1500
Beryllium	--	1.1Q(04)	--	--	0.008	--	--
Cadmium	--	56(04), 29(05)	--	--	10	5	5
Chromium	--	443(03), 87(05)	--	50(04)	50	50	100
Lead	446J(04)	6560J(04), 4040(05)	764J(04), 895(05)	--	50	50	20
Mercury	--	1340(04)	--	--	700	--	2
Selenium	18Q	--	--	--	10	10	10
Total PCBs	--	12(04)	--	--	0.005	0.5	0.05

NOTES:
This data is complied from the RCRA Facility Investigation by McClaren and Hart (1991).
--: Indicates parameter not detected in exceedance of reference standard(s).
(04) or (05) after analyte concentration indicates round 4, round 5 of multiple sampling events.
(1) FAL: Federal Action Level.
(2) NPWR: National Primary Drinking Water Regulation.
(3) MEG: Maximum Exposure Guideline.
Q = Qualitative
J = Qualitative and Semi-Quantitative

Surface (0 - 6") and shallow (0 - 2') soil samples taken in the area of the IWTP as part of the RCRA Facility Investigation were analyzed for priority pollutant metals, total petroleum hydrocarbons and PCBs. Soil sampling locations are identified on Figure 2. The results identified the presence of several metals. Table 2-3 presents a summary of those detections that were in exceedance of EPA soil ingestion criteria and/or New Jersey ECRA Guidance values. The highest levels detected were of lead at location DW-03. McClaren and Hart (1991) also attributed the soil detections to the DRMO site and the nature of the fill materials in the area.

TABLE 2-3: SUMMARY OF SITE AREA SOIL SAMPLES IN EXCEEDANCE OF FEDERAL ACTION LEVELS AND/OR NEW JERSEY ECRA GUIDANCE VALUES

PARAMETER	LOCATION AND CONCENTRATION (mg/kg)						New Jersey ECRA Guidance Values	EPA Soil Ingestion Criteria(1)	Levels Found In Eastern United States(2)
	DW-03 (DSB-03)	SS-9	SS-10	SS-11	SS-12	SS-12-03			
VOLATILES									
Total Voc's	--	--	--	--	--	1800	1000		
TPH	140J	260J	--	450J	610J	--	100		
INORGANICS									
Beryllium	--	--	0.65Q	0.5Q	--	--	1	0.16	<1-7
Copper	912	559J	5740J	4550J	--	--	170		<1-700
Lead	130,000	--	3490	--	301	--	250	250	<10-300
Nickel	134J	--	152J	4970J	--	--	100	2000	<5-700
Silver	7.8	--	--	8.1	--	--	5	200	
Zinc	630	--	10305	--	--	446	350	20,000	<5-2900
Cadmium	3.3						3	80	
Mercury	20J	--	--	--	--	--	1	20	0.01-3.4

NOTES:

This data is complied from the RCRA Facility Investigation by McClaren and Hart (1991). Soil samples taken from 0 to 6 inches below grade, except DSB-03 taken at 0 to 2 feet below grade.

(1) Based on EPA Health Effects Assessment Tables, 1990.

(2) Taken from Element Concentrations in Soils and Other Surficial Materials of Conterminous United States, US Geological Paper 1270, 1984.

--: Indicates parameter not detected in exceedance of reference standard/guidance value.

J = Denotes Qualitative and Semi-Quantitative.

Q = Denotes Qualitative.

3.0 MONITORING WELL INSTALLATIONS

3.1 Objectives

The proposed monitoring well locations were chosen to provide an adequate groundwater monitoring network for the detection of non-sudden releases of hazardous substances from the IWTP to the groundwater. The soil borings will allow for collection of soil samples representative of site conditions and allow for subsequent installation of groundwater monitoring wells. The installation of the wells will facilitate collection of groundwater samples that are representative of existing groundwater conditions and provide a basis for interpreting the IWTP's impact, if any, on groundwater quality.

3.2 Monitoring Well Locations

Based on groundwater flow directions established for the site area and background geologic data, monitoring well locations were selected. Monitoring well locations are shown on the Site Plan Map, Figure 2. A total of four groundwater monitoring wells are proposed as part of the GMP, including three new wells and one existing well.

MW-1, the upgradient monitoring well, will be utilized in establishing upgradient background groundwater quality. This well is anticipated to be a bedrock aquifer monitoring well. MW-1 will be installed first to determine installation details of the downgradient monitoring wells. It is anticipated that bedrock will be encountered 10 to 15 feet below the ground surface at this locale necessitating the installation of a bedrock well.

Three wells are to be utilized at locations downgradient of the IWTP:

MW-2:	Overburden monitoring well.
MW-2B:	Bedrock aquifer monitoring well, to be installed if MW-1 is a bedrock well.
DW-03:	Existing overburden monitoring well.

The downgradient monitoring points were chosen to:

1) establish monitoring points that will allow for the collection of samples that are representative of groundwater passing beneath the IWTP.

2) take advantage of an existing monitoring well installation (DW-03).

The proposed location for monitoring well MW-2 was selected to provide a directly downgradient monitoring point. This location was selected to intercept the flow path of groundwater traveling beneath the IWTP.

It is anticipated bedrock will be encountered from 25-30 feet below ground surface at this location. In the event the upgradient monitoring well is installed as a bedrock well, it is proposed that a well couplet be installed at the MW-2 location. Both an overburden well and a bedrock well would be installed.

The overburden well (MW-2) will serve as an early detection monitoring point of accidental releases into the uppermost aquifer. The bedrock well (MW-2B) will provide groundwater quality data for comparison to the upgradient monitoring location and assess downgradient water quality of the bedrock aquifer.

Existing monitoring well DW-03 is proposed to be incorporated into the groundwater monitoring network. This well is located directly downgradient of the IWTP on the western perimeter of the site. According to a test boring log/construction detail, DW-03 is screened in the overburden, intercepting the uppermost aquifer. A copy of the log is attached in Appendix A. This well will provide a monitoring point for collection of samples that represent groundwater from the uppermost aquifer passing beneath the IWTP.

3.3 Supervision of Drilling Operations and Monitoring Well Installations

All drilling and other associated field work involved in this GMP will be supervised by a full-time, on-site geologist. The on-site geologist will work under the direct supervision of an American Institute of Professional Geologist Certified Professional Geologist (CPG). The on-site geologist will be responsible for

supervising the collection of soil samples, field screening of soil samples, recording of drilling and sampling data, recording of groundwater data, deciding on the final drilling depths and screened intervals (with input from the project manager and senior hydrogeologist [CPG]), recording the monitoring well construction procedures, and monitoring the decontamination of drilling equipment. Field reports will be prepared that document the daily activities and their conformance to the Groundwater Monitoring Plan. Appendix B contains blank copies of the Field Data and Sampling Quality Assurance/Quality Control forms.

3.4 Drilling and Sampling of Overburden

Borings will be advanced through the overburden using hollow-stem augers having a minimum 4-1/4 inch inside diameter (ID). The drilling will be performed in accordance with ASTM D-1452, Standard Practice for Soil Investigation and Sampling by Auger Borings.

Information from previous investigations performed in the area indicate difficulties with the advancement of augers through the overburden. Should this situation arise 4-inch casing will be driven and soil samples will be collected continuously to the bedrock surface or sampling refusal. A standard split barrel sampler, which is 24-inches long and 2-inches in diameter, will be used for sampling. Standard penetration tests (SPTs) will be conducted during the collection of soil samples in accordance with ASTM D-1586, Standard Method for Penetration Test and Split-Barrel Sampling of Soils.

All soils will be classified in the field using the Unified Soil Classification System in accordance with ASTM D-2488, Standard Practice for Description and Identification of Soils. The soil description will include matrix and class descriptions, mineralogy, roundness, moisture content, color, appearance, odor, behavior of the material and any other pertinent observations. This information will be recorded on a test boring log form along with the boring identification and elevation, date started and completed, sampling intervals, blows per 6-inch increment of the split-barrel sampler, standard penetration values, length of recovered sample and depth of first groundwater encountered. All of these

visual observations and field measurements will be recorded on the Test Boring Log. A blank copy of a Test Boring Log form is enclosed in Appendix B.

The soil cuttings from the borings will be collected and placed in a 55-gallon drum (DOT 17-H) and stored by the Shipyard until laboratory analyses indicate the proper method of disposal.

3.5 Soil Sampling

The specific soil sampling procedures that will be followed are:

1. A cleaned (per Section 3.10) split-spoon sampler wrapped in aluminum foil to prevent cross contamination during handling, will be given to the driller or helper who will attach it to the sampling rod. Once in place the aluminum foil will be removed from the sampler. Clean disposable gloves will be worn when handling the split-spoon.

2. A soil sample will be collected per procedure ASTM D-1586.

3. The sample container label will be completed with the sample location (boring nomenclature), sample interval, sampler's initials, date and time; and wrapped with clear tape to protect the label. The client, project name, site location, matrix, sample type (grab/composite) and laboratory analyses to be performed will be recorded on the sample label when the sample containers are prepared at the laboratory prior to sampling.

4. A recovered split-spoon sampler will be placed on clean polyethylene sheeting. The end cap will be unscrewed and the spoon opened to expose the sample.

5. Immediately upon opening the split-spoon the soil samples will be retrieved from the split-spoon directly into pre-cleaned glass jars using a clean (per Section 3.10) stainless steel trowel or scapula or with a clean sampling glove, and the jars will be sealed. Sampling personnel will wear a new pair of disposable gloves for each sample interval retrieved from the

catalogued and placed in appropriately labeled core boxes and retained for future reference. Monitoring well installation will be carried out as discussed in Section 3.8

3.7 Overburden Monitoring Well Installation

Overburden monitoring wells will be installed inside the hollow-stem augers. Once the hollow-stem augers are advanced to the desired depth two-inch diameter monitoring wells with slotted screens will be installed in accordance with standard practices. Typical overburden well construction details are shown in Figure 3. All wells will be constructed of 2-inch diameter, teflon-taped, flush-threaded joint, Schedule 40 PVC riser pipe, screen, bottom plug, and cap. The screens will be 0.010-inch slotted and generally ten feet in length.

Each well will be assembled as it is lowered into the borehole through the hollow-stem auger or casing. The annulus around the well screen will be packed with clean silica sand to a maximum of two feet above the screen. A one-half foot choke of fine-grained sand will be placed on top of the sand pack to preclude the migration of the seal material into the sand pack. A minimum two to three-foot bentonite seal will be installed in the annulus. The seal will consist of bentonite pellets or slurry. The remainder of the annulus will be filled with cement/bentonite grout (ratio of 20 to 1). A flush mounted steel monitoring well curb box will be set over each well head and cemented in place to a minimum depth of two (2) feet below grade. A positive grade will be constructed of cement around the well to divert surface water away from the well. A permanent mark will be made at the top of the PVC riser to serve as a datum for all subsequent static water level measurements. Upon completion a locking gripper well cap will be installed and locked. A well identification tag will be placed on the inside of each monitoring well curb box (attach to gripper cap or equal method). Monitoring well depths, and screen lengths and depths will be calculated by the staff geologist by maintaining accurate measurements of screen and casing placed in the borehole. A Well Construction Log will be completed that documents the well materials and depths. A blank copy is enclosed in Appendix B.

surging will be accomplished by rapidly raising and lowering the bailer within the screened interval. The bailer will then be used to obtain a water sample to check the color, turbidity, odor, and sand and silt content of the well water.

Each well will be pumped using dedicated polyethylene tubing. The well will be pumped at a rate of approximately 1 gpm until the water clears or until at least 5 well volumes of water have been removed. During development with a centrifugal pump, pumping will be interrupted, periodically, to surge the well with the PVC bailer. This will suspend sand and fine silt that may have settled in the well and will pull fines out of the sand pack and the formation, so the sediment can be pumped out of the well in the purge water. Color, turbidity, odor, and fines content will be noted before and after development.

The bailing rope, polyethylene pump tubing and stainless steel bailer will be dedicated to each well to prevent cross-contamination during development. The dedicated bailer can be utilized when the wells are purged for groundwater sampling.

The development water from the monitoring wells will be collected and treated at the IWTP.

3.10 Decontamination of Drilling, Well Construction and Sampling Equipment

A decontamination area (at a fixed location on the property) which consists of a flagged-off area and wash and rinse basins and drums for the disposal of expendable materials and waste drilling soils and cuttings, will be provided for the decontamination of drilling and field sampling equipment, and workers.

Drilling equipment including casings, rods, samplers, tools and any piece of equipment that can come in contact with the formation will be cleaned with a high pressure - high temperature washer (i.e. steam cleaner) prior to the start of work and in between each boring to prevent cross-contamination between borings. The equipment will also be cleaned using the same procedure at completion of the work (before leaving the site) to prevent any contamination from leaving the site. Well screen and casing will also be cleaned by steam

3.11 Corrective Action Measures

The site health and safety officer (HSO) or designee, as designated in the site Health and Safety Plan (attachment) shall implement a corrective action program in the event of an accidental release of a hazardous material or suspected hazardous material.

The HSO will act as the Emergency Coordinator for the purposes of: spill prevention; identifying releases; implementing clean up measures; and notification of emergency personnel at the Shipyard.

The corrective action program will rely on the HSO's awareness and knowledge of existing site conditions in order to implement effective control measures to minimize any impact the accidental release may have.

Effective control measures will include:

- Control of the release source
- Containment of the released material
- Effective cleanup of the release

Potential sources of accidental releases include; hydraulic oil spills or leaks from drilling equipment and fuel leaks from drilling and sampling related equipment. The HSO/Emergency Coordinator shall respond to an accidental release in the following manner:

- Identify the character, source, amount and area affected by the release.
- Take all reasonable steps to control the release.
- Notify Portsmouth Naval Shipyard emergency response personnel as designated in the HASP.
- Contain the release with sorbent material which should include speedi-dry, spill socks and sorbent pads.
- Prevent the release from entering sensitive receptors (i.e., catch basins and surface water) using the specified sorbent material or sandbags.
- Coordinate cleanup of the release.

- Oversee proper handling and storage of contaminated material for disposal by the Shipyard.

At no time should personal health or safety be jeopardized in an attempt to control a release. All health and safety measures as outlined in the HASP should be adhered to.

4.0 GROUNDWATER SAMPLING AND ANALYSIS PLAN

4.1 General

The groundwater sampling and analysis plan (SAP) was developed to provide strict acceptable protocols to be followed during the collection and transportation of groundwater samples. The SAP is designed to eliminate the potential for sample variation from well to well and sample event to sample event due to inconsistent sampling and transportation techniques.

The SAP is organized into sections based on actual sample collection and handling chronology. Included in the SAP are: preparations necessary for sampling; water level collection methods; well purging procedures, sampling methodologies, field analysis protocols, sample handling and chain of custody procedures, and a laboratory analysis summary.

Quality control procedures that will be instituted in the field and laboratory are detailed within Section 4.8. Data validation is also included in Section 4.8.

4.2 Preparation for Sampling

Prior to groundwater sampling the equipment needed for sampling and the sample containers will be collected and prepared. The sampling equipment will be cleaned as described below prior to use, in between each use and at completion of use:

- Scrub with tap water and non-phosphate detergent,
- rinse with tap water,
- rinse with 10% HNO_3, ultrapure,
- rinse with tap water,
- rinse with methanol,
- rinse with hexane,
- rinse with deionized water,
- air dry, and
- wrap in aluminum foil.

A new pair of disposable gloves will be worn during equipment cleaning and decontamination. Cleaned sampling equipment will be stored in polyethylene bags or in a clean protected area. Only new pre-cleaned sample containers and caps will be used for samples. Containers are pre-cleaned by the supplier. All sample containers when necessary/required will have fixatives added by the laboratory before each sampling event. The container type, cap type and preservative requirements for applicable analytical parameters are presented in Table 4-1.

TABLE 4-1: CONTAINER TYPE, CAP TYPE AND PRESERVATIVE REQUIRED PER ANALYSIS PARAMETER

ANALYTICAL PARAMETER	MATRIX	CONTAINER TYPE	CAP TYPE	PRESERVATIVE/ FIXATIVE
TCL Volatiles	Water	40 ml glass	Teflon lined septum	HCL to pH <2 Cool 4°C
TCL Semi-Volatiles	Water	glass	Teflon lined	Cool 4°C
TAL Inorganics (excluding mercury)	Water	500 ml poly	poly	$HNO_3$to pH <2 Cool 4°C
Mercury	Water	1 L poly	poly	$HNO_3$to pH <2 Cool 4°C
PCB's/Pesticides29	Water	2L amber glass	Teflon lined	Cool 4°C
Total Dissolved Solids	Water	500 ml poly	metal	Cool 4°C
Alkalinity	Water	250 ml poly	metal	Cool 4°C
Chloride (total)	Water	500 ml poly	metal	Cool 4°C
pH	Water	500 ml poly	metal	Cool 4°C

Sample labels will be prepared prior to sampling and affixed to the sample containers. The client, project name, site location, matrix, sample type (grab/composite), preservative and laboratory analyses to be performed will be recorded on the sample labels when the sample containers are prepared at the laboratory. The sample location (monitoring well ID), date, sampler's initials and time will be filled out on the sample label at the time of sampling.

Upon arrival at the sampling location, the well will be observed for any damage, the cover of the curb box will be cleared of any debris and unbolted. Clean

polyethylene sheeting will be placed adjacent to the well to protect purging and sampling equipment from contamination. If any water is present in the curb box it will be removed prior to removing the well gripper cap. The cap and top of the well casing will be wiped with a clean cloth and then the cap unlocked and removed. The water level in the well will then be measured.

4.3 Measuring The Water Level

Prior to sampling and purging, static water heights will be measured using a water level indicator to determine the standing water column height. A full round of water levels will be taken prior to initiating the water sampling. The water column heights and depth of the well are used to calculate the well water volumes. Water level height and depth of the well will be measured to an accuracy of 0.01 feet below the measuring point located on the top of the well casing.

To avoid possible cross contamination of the wells, the water level indicator will be decontaminated prior to and following the water measurement of individual wells. The water level indicator will be decontaminated by rinsing it with distilled water or tap water, then rinsing it with methanol and wiping it with a clean cloth or paper towel and then rinsing it with copious amounts of distilled water.

Non-vented well caps will be removed for a period of ten minutes to allow the water column to reach static conditions prior to taking the water level measurements.

4.4 Well Evacuation/Purging Procedures

Before the sampling of the groundwater, it is necessary to purge the wells. Purging of the wells allows for a representative sample to be taken from the screened internal of the well by removing stagnant water from the well.

Three to five volumes of the standing water will be removed from the well. The volume of standing water in the well is calculated by subtracting the water level

height from the well depth measurement, and multiplying this value by a conversion factor. The conversion factor is based on the well casing diameter and converts linear feet of water into gallons. In cases where the water recharges at a slow rate, the well will be purged dry when possible. Purging activities will include the monitoring of field parameters (pH, turbidity, specific conductance, temperature). Attempts will be made to achieve suitable turbidity levels (<10 NTU) prior to sampling.

Clean dedicated bottom filling stainless steel bailers with Teflon™ ball check valve will be used to purge the wells. Bailers will be dedicated to an individual well during sampling events. If an alternative purging method is used it will be documented on the groundwater sampling log form. A blank copy of the form is attached in Appendix B. A clean, new piece of polypropylene rope will be used at each individual well and will be properly discarded after each sampling event. Physical observations of the purge water will be noted and recorded in the groundwater sampling log. The actual quantity of purge water removed from the well will be measured by using a bucket graduated in gallons, and the volume will be recorded. Once purging is complete, the bailer or alternate purging device will be removed from the well and placed on the clean polyethylene sheeting adjacent to the well, until completion of the groundwater sampling.

The purge water from the monitoring well will be collected and treated at the IWTP.

4.5 Sampling Procedures

Prior to sample collection the wells will be allowed to recover to their initial static water level. Slow recharging wells will be allowed to recover for a period of four hours before sampling. Recovery times and water depths will be recorded on the sampling log form.

The sample will be collected using a clean stainless steel bailer that was dedicated to the well for the sampling event. A new pair of disposable surgical gloves will be used to handle the sampling equipment and containers at each sampling

location. Only non-powdered sampling gloves will be used during sampling for metals.

All pertinent groundwater sampling information will be recorded on a Groundwater Sampling Log (attached in Appendix B). A separate log will be completed for each monitoring well sampled. Logs will be dated and signed by the person making the entries and will be submitted to the project manager for inclusion in the project files. The following information will be included on the log forms:

1. Project name and location
2. Date and times
3. Monitoring well identification number
4. Bailer identification number and construction
5. Well evacuation data
6. Physical characteristics of samples.
7. Field parameter results
8. Name of sampler(s)
9. Recovery times
10. Any additional observations/information.

A Field Report will also be completed for the groundwater sampling event. A blank copy of the referenced forms are enclosed in Appendix B.

The stainless steel bailer will be lowered slowly into the well to minimize the aeration of the samples. Volatile samples will be collected first, followed by field parameters and then in decreasing order of the volatility of the parameters being analyzed for.

In order to insure the integrity of samples, sample containers must be filled properly. The following sections contain general procedures for sampling and specific procedures for sampling volatile organics. Care shall be taken in sampling to assure that analytical results represent the actual sample composition.

A. General Sampling

1. Don't remove caps until the actual sampling time and only long enough to fill the container.
2. Identify every container by filling out the label with all the required data and wrap container with clear tape to protect the label.
3. Fill all containers completely.
4. Some bottles may contain a fixative which should not be rinsed out of the bottle. Read the sample label treatment and fixative section to determine if a preservative/fixative has been added. Be careful not to contact fixatives with skin or clothing. If this should occur, rinse liberally with water.
5. After the sample is taken, wipe the container with a paper towel and place the container in a cooler with ice packs, to maintain the cooler at 4°C.
6. Complete the Groundwater Sampling Log and Chain of Custody Record forms.
7. Deliver or ship samples to the laboratory within 48 hours.

B. Sampling for Volatile Organics

1. Samples are to be collected in glass containers having a total volume in excess of 40 ml with open-top screw caps with teflon-faced silicone septa. Sample containers will have hydrochloric acid (HCL) added to them as a preservative. This should not be rinsed out.

2. A sample blank prepared from organic-free water and carried through the sampling and handling protocol will serve as a check on transport and container contamination.

3. Fill sample container slowly to minimize aeration of the sample, until a curved meniscus is observed over the bottle rim.

4. Float the septa, teflon side down on the liquid meniscus. The teflon side is the thin layer observed when viewing the septum from the side horizontally.

5. Carefully tap on septum, expelling excess sample and being careful to exclude air. Screw open-top cap down.

6. Check for a good seal by inverting bottle and checking for visible air bubbles.

7. In case of a bad seal, remove cap and add additional sample and repeat steps 4 to 6.

8. Groundwater samples for volatiles analysis will be taken in triplicate.

At completion of the sampling the well gripper cap will be put in place, closed and locked; and the cover to the curb box will be bolted in place. The cord, gloves and sheeting will be properly disposed of as solid waste, and the sampling equipment decontaminated and placed in a clean plastic bag.

4.6 Field Analyses

During the groundwater sampling pH, temperature and specific conductivity will be measured in the field since these constituents change during storage. A minimum 128 ml sample will be collected in duplicate and placed in clean unpreserved polyethylene containers for analysis. The containers will be covered if the measurements are not taken right away.

The temperature will be measured with a mercury filled Celsius thermometer. The pH will be measured with a pH meter manually adjusted to compensate for

the temperature of the sample. The specific conductance will be measured using a conductivity meter. The field measurements will be recorded on the Groundwater Sampling Log.

4.7 Laboratory Analyses

A summary of sampling and analyses to be performed is contained in Table 4-2. One soil sample per test boring will be submitted for chemical analytical characterization for TAL inorganics (modified list). Soil samples will be selected for analysis based on proximity to seasonal high water, soil sampling recovery and geologist visual observation.

TABLE 4-2: SUMMARY OF LABORATORY ANALYSES TO BE PERFORMED AND FREQUENCY

SAMPLE TYPE	ANALYSIS	FREQUENCY
Groundwater	TCL Volatiles	once during 1st year(2)
	TCL Semi-Volatiles	once during 1st year(2)
	Pesticides/PCB's	once during 1st year(2)
	TAL Inorganics(3)	annual
	Total Dissolved Solids	annual
	Chloride	annual
	pH	annual
Soil	TAL Inorganics	1 sample per boring during monitoring well installations

(1) One sample per monitoring well will be taken.
(2) TCL volatiles, semi-volatiles and pesticides/PCBs will be done once during the first sampling event to establish background conditions.
(3) During the first sampling event both filtered and unfiltered samples will be analyzed.

The first round of groundwater samples will be collected no sooner than one week after development of the monitoring wells has occurred. Groundwater samples from all four wells will be analyzed for TCL volatiles and semi-volatiles,

TABLE 4-3: ANALYTICAL PARAMETERS, SAMPLE PREPARATION AND ANALYSIS METHODS

PARAMETER	SAMPLE PREPARATION METHOD[1]	ANALYSIS & METHOD[1]	PRACTICAL QUANTITATION LIMIT (PQL) FOR WATER ug/l
TCL Volatiles	EPA 5030	SW846 EPA Method 8240/502.2	5-10
TCL Semi-Volatiles	EPA 3510	SW846 EPA Method 8270	5
TCL Pesticides	EPA 3510	SW846 EPA Method 8080	0.05-1.0
Modified TAL Inorganics List:			
Aluminum	EPA 3010	SW846 EPA Method 6010/200.7	200
Antimony	EPA 3010	SW846 EPA Method 6010/200.7	200
Arsenic	EPA 3050/3005	SW846 EPA Method 7060/206.2	10
Barium	EPA 3010	SW846 EPA Method 7060/206.2	200
Beryllium	EPA 3010	SW846 EPA Method 7060/206.2	5
Cadmium	EPA 3010	SW846 EPA Method 7060/206.2	10
Chromium	EPA 3010	SW846 EPA Method 7060/206.2	10
Copper	EPA 3010	SW846 EPA Method 7060/206.2	25
Iron	EPA 3010	SW846 EPA Method 7060/206.2	100
Lead	EPA 3050/3005	SW846 EPA Method 7421/239.2	1
Manganese	EPA 3010	SW846 EPA Method 6010/200.7	10
Mercury	EPA 3010	SW846 EPA Method 7471/245.2	0.2
Nickel	EPA 3010	SW846 EPA Method 6010/200.7	40
Selenium	EPA 3050/3005	SW845 EPA Method 7740/270.2	5
Silver	EPA 3010	SW846 EPA Method 6010/200.7	10
Tin	EPA 3010	SW846 EPA Method 6010/200.7	100
Zinc	EPA 3010	SW846 EPA Method 6010/200.7	20
Total Dissolved Solids		EPA Method 160.1	1000
Chlorine (Total)		SW846 EPA Method 9251	2000
pH		SW846 EPA Method 9045	0-14

[1]For TAL Inorganics soil prep/analysis method listed first, water second.

samples for volatiles analysis are taken in triplicate, so this procedure will be repeated three times using a new full bailer of water each time. If water is left in the bailer after both the sample and replicate sample container have been filled, it will be poured out (and handled the same as the purge water) prior to refilling the bailer.

Equipment/field blanks are samples taken to monitor sampling equipment cleanliness and decontamination procedures during field sampling. One equipment/field blank will be taken during groundwater sampling. The equipment/field blanks will be taken as follows:

After the bailer has been decontaminated and is ready for sampling, pour deionized water into the bailer or glass flask (as applicable) and then into the sample container(s).

The equipment field blanks will be identified as such and by the location to be sampled (example, equipment blank before DW-03).

Transport blanks are prepared when volatile analyses are to be performed, and they are prepared in the laboratory when the sample containers are prepared. Transport blanks will be prepared in triplicate by filling 40 ml glass containers (with teflon lined septum) with deionized water. These containers will travel unopened with the sample containers and be analyzed for the same volatile constituents as the samples being submitted. The transport blanks are taken to monitor whether the samples have been contaminated during transport, as a result of handling in the field, during shipment or during storage in the laboratory. One transport blank will accompany each set of samples that are shipped/delivered to the laboratory for volatile analysis.

4.8.2 LABORATORY QUALITY CONTROL

The analytical laboratory retained to perform the laboratory analyses will have a Quality Assurance Program Plan (QAPP) that describes laboratory procedures for data reduction, validation and reporting as well as all internal laboratory quality control measures including:

- management organization and responsibility,
- quality assurance objectives for data management,
- sampling procedures,
- document control,
- calibration procedures,
- sample preparation and analytical procedures,
- data reduction, validation and reporting,
- internal quality control checks,
- performance and system audits,
- preventative maintenance,
- data assessment procedures,
- corrective action,
- quality assurance reports to management, and
- method detection limits

For the initial round of sampling, the laboratory analyses will be performed by CTM Analytical Laboratories, Ltd. of Latham, New York. A copy of CTM Analytical's QAPP is provided in Appendix C.

Internal laboratory quality control will generally consist of:

- Blanks (method, preparation),
- initial and continuing calibrations,
- surrogate spikes,
- matrix spikes/matrix spike duplicates,
- duplicate samples, and
- control samples/matrix spike blanks.

The quality control samples will be run in accordance with the protocols and frequencies specified in the SW-846 and EPA Methods as applicable for the analyses being performed.

Laboratory data will be provided in a QC data package. The QC data package which will include the following:

- A case narrative including sample ID, client ID, matrix, date sampled, a description of problems encountered during the analysis and a certification statement.
- A summary sheet containing results for each sample analyzed. The summary sheet should include; site name, sample number, sample matrix, sampler, sample location, date received, date analyzed, analyst, analysis method and parameter, methodology used, practical quantitation limit (PQL), results with units and any analyst qualifiers.
- QC summary sheets for all internal quality control procedures, reporting information in a similar manner as above.

4.8.3 DATA VALIDATION

Internal data validation of all the laboratory analyses will be performed by the laboratory Quality Assurance Officer to ensure that the data package is complete and meets the criteria of the Groundwater Monitoring Plan. Any problems encountered in performing the analyses by the laboratory such as out of limit surrogate or spike recoveries, and comments on the quality and limitations of specific data and the validity of the data will be described in the case narrative of the laboratory report.

Data validation will be performed in accordance with EPA Region I Laboratory Data Validation Function Guidelines for Evaluating Organic and Inorganic Analyses dated February 1, 1988 and June 13, 1988 respectively. External data validation of all the sample results will be performed by a MEDEP approved data validator. The validator will submit a detailed Data Validation Report describing the results/findings of the external data validation including comments on the quality and limitations of specific data and on the validity of the data package.

4.9 Sample Handling and Chain of Custody Procedures

A Chain of Custody Record will be completed by the sampler in the field. The sampler will be responsible for retaining possession of the samples until they are delivered to the laboratory or until they are delivered to a courier or overnight

common carrier for shipment to the laboratory. When the samples are released from the custody of the sampling personnel, the Chain of Custody Record will be signed by both relinquishing and receiving parties with the date and time indicated. A copy of the form will be retained by the sampler for inclusion in the project files and the original form will accompany the shipment. The Chain of Custody Record will then be signed by the relinquishing party and receiving laboratory personnel when the samples are received at the laboratory.

If samples are shipped, a bill of lading or an air bill will be used and retained in the project files as documentation of sample transportation. Prior to shipment the cooler will be securely wrapped with clear tape to protect it from tampering.

4.10 Data Reporting

The field measurement data and the laboratory analyses results of detected parameters will be compiled and tabulated to facilitate comparison and evaluation, and will be included in a report. The tabulated data will include at a minimum:

- summary of monitoring wells installed, depth of borings, and screened interval (initial report),
- soil analyses results and any laboratory provided data qualifiers (initial report),
- water level measurements, surveyed monitoring well elevations and groundwater elevations,
- field analyses results (pH, temperature, specific conductance),
- groundwater analyses results and any laboratory provided data qualifiers,
- quality control results (replicates, equipment/field blanks, transport blanks).

The laboratory provided data qualifiers will include 1) the estimated concentration which is below the required detection limit, 2) whether any constituent was also found in the method blank and if so, at what concentration, and 3) the estimated concentrations due to poor spike recovery.

The groundwater analyses results will be presented in tabular form and compared to previous groundwater contaminant detections in the area of the IWTP, the Maine Maximum Exposure Guidelines and the proposed Federal Action Levels. A copy of both the reference standards is provided in Appendix D.

A statistical analyses will be performed using the Student's t-test to determine if there is a statistically significant increase (or decrease in case of pH) in the results compared to the results of previous sampling events. The existing water quality data generated during the RCRA Facility Investigation will be considered as the background levels for performing the statistical analysis. The analysis will be performed using the results of one sample analysis, not four replicate measurements on each sample.

A report will be prepared and submitted to the Maine Department of Environmental Resources on an annual basis. The report will include sampling procedures and observations, the tabulated laboratory analysis results, the evaluation/interpretation of the results and statistical analysis, a copy of the laboratory analysis report and chain of custody record, a copy of the completed groundwater sampling field data log sheet, the laboratory QA/QC data package and the data validator's report.

5.0 HEALTH AND SAFETY PLAN (HASP)

Personnel implementing the Groundwater Monitoring Plan shall meet the training requirements of 29 CFR Part 1910.120. While performing the work all personnel shall adhere to all health and safety measures as outlined in the "Site Specific Health and Safety Plan For The Implementation Of The Groundwater Monitoring Plan At The Industrial Waste Treatment Plant". A copy of the HASP shall be present on site at all times during the performance of activities associated with the Groundwater Monitoring Plan. A copy of the complete HASP is attached. A condensed version of the HASP is included in Appendix E. A shortened HASP specifically for the annual groundwater sampling events is included in Appendix F.

REFERENCES

Acker, W.L., "Basic Procedures for Soil Sampling and Core Drilling," Acker Drill Co., 1974.

Driscoll, F.G., "Groundwater and Wells," Johnsown Filtration Systems, Inc., 1989.

McLaren and Hart, "RCRA Facility Investigation Report," prepared for the Portsmouth Naval Shipyard, 1991.

Neilsen, David M., Editor, "Practical Handbook of Groundwater Monitoring," Lewis Publishers, 1991.

U.S. Department of the Interior, "National Handbook of Recommended Methods for Water Data Acquisition," USGS, 1977.

U.S. Department of the Navy, "Environmental Sampling Operations Manual, Portsmouth Naval Shipyard," September, 1992.

CR/ps

FIGURES

FIGURE 1: SITE LOCATION MAP

FIGURE 2: SITE PLAN MAP - INDUSTRIAL WASTE TREATMENT PLANT

FIGURE 3: TYPICAL OVERBURDEN WELL INSTALLATION

FIGURE 4: TYPICAL BEDROCK WELL INSTALLATION

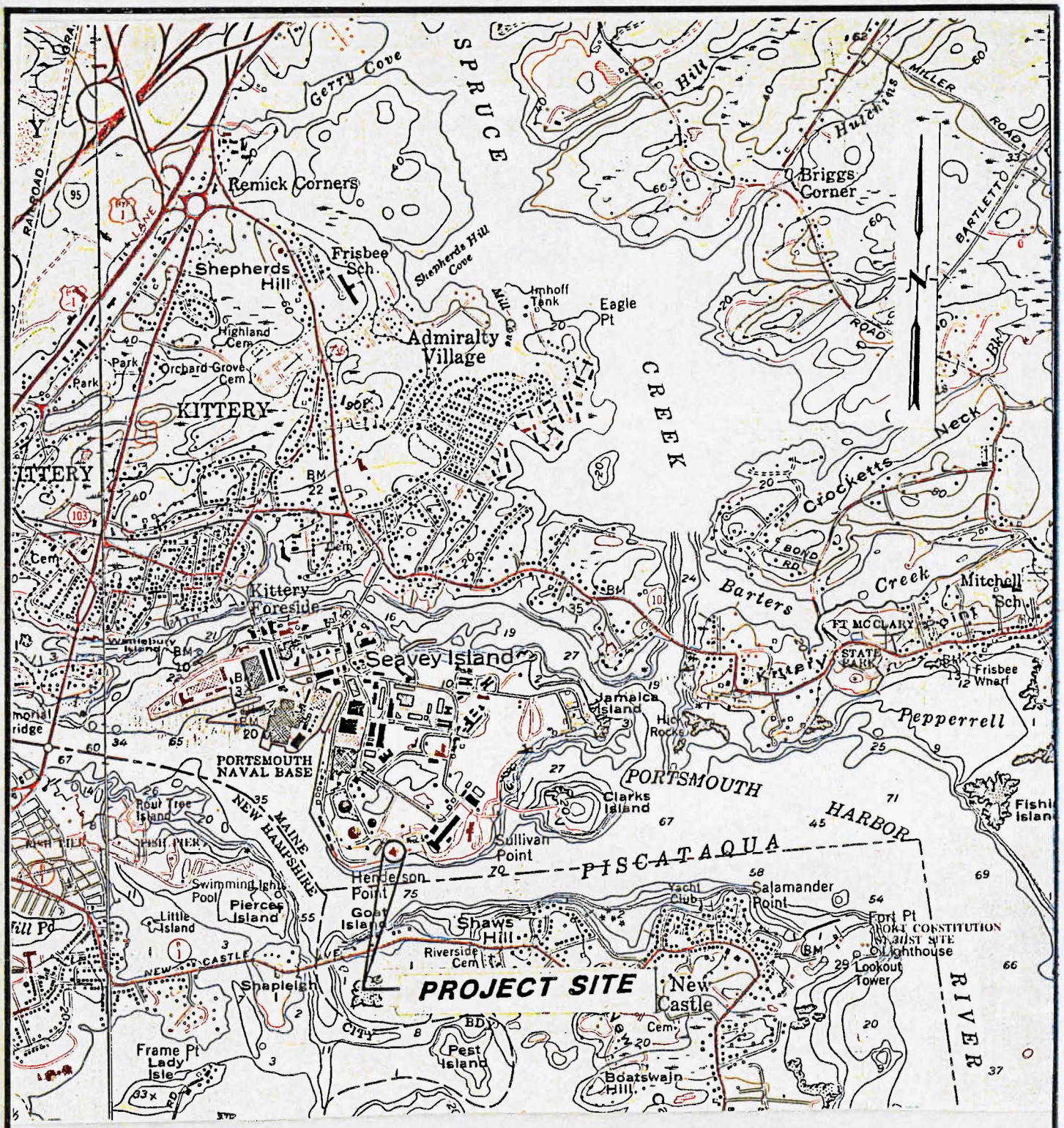

MAP REFERENCE:
U.S.G.S. QUADRANGLE, 7.5 MIN. SERIES
KITTERY, MAINE AND PORTSMOUTH,
NEW HAMPSHIRE.

0 2000 4000
1000 3000.

DEPARTMENT OF THE NAVY	NAVAL FACILITIES ENGINEERING COMMAND
NORTHERN DIVISION	
LESTER	PENNSYLVANIA
PORTSMOUTH NAVAL SHIPYARD	KITTERY, ME.

FIGURE 1: SITE LOCATION MAP
INDUSTRIAL WASTE TREATMENT PLANT

APPROVED	DATE 4/20/94 NORTHDIV FOR COMMANDER, NAVFAC

SAT TO
DATE
CODE I.D. NO.
SCALE : 1" = 2000'
SPEC. NO. 04 -
CONSTRN. CONTR. NO.
NAVFAC DRAWING NO.
SHEET 1 OF 4
SIZE:
DIS. SH. NO. FIGURE 1

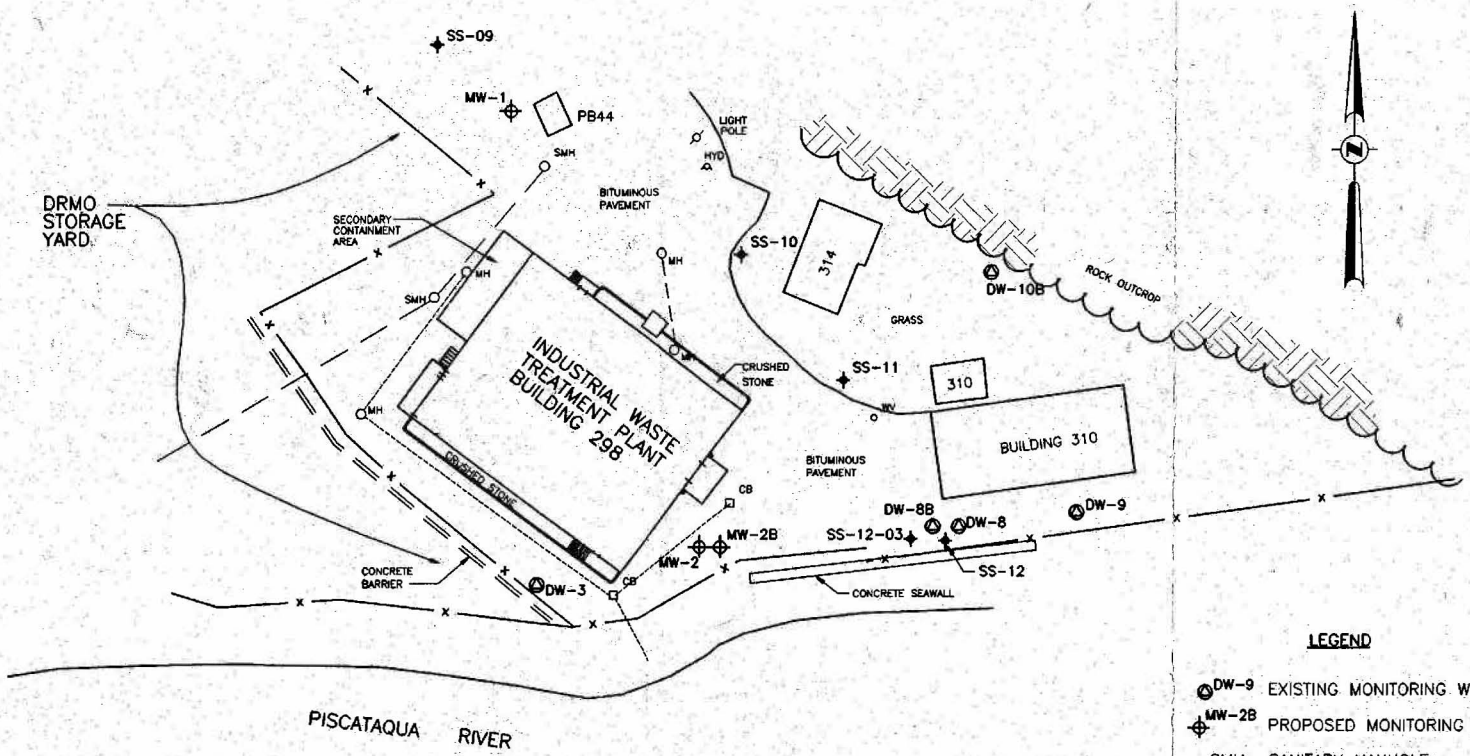

LEGEND

DW-9	EXISTING MONITORING WELL
MW-2B	PROPOSED MONITORING WELL
SMH	SANITARY MANHOLE
MH	STORM MANHOLE
CB	CATCH BASIN
WV	WATER VALVE
HYD	HYDRANT
SS-11	SURFACE SOIL SAMPLE LOCATION (APPROXIMATE)

MAP REFERENCES:

1. "TOPOGRAPHIC SITE PLAN, DRMO STORAGE YARD" PORTSMOUTH NAVAL SHIPYARD, KITTERY, MAINE. PREPARED BY FRANK EMERY, ENGINEERS/SURVEYORS. REVISED OCTOBER 28, 1991.

2. "SITE PLAN, GRADING & STORM DRAINAGE; INDUSTRIAL WASTE TREATMENT" PORTSMOUTH NAVAL SHIPYARD, DRAWING 298-73-4, DATED APRIL, 1923.

0 25 50 100
SCALE IN FEET

SIZE: SHEET 2 OF 4
DIS. SH. NO. FIGURE 2
NAVFAC DRAWING NO.
CONSTRN. CONTR. NO.
SPEC. NO.
SCALE : 1" = 50'
CODE I.D. NO.
SAT TO
DATE

DEPARTMENT OF THE NAVY — NAVAL FACILITIES ENGINEERING COMMAND
NORTHERN DIVISION
LESTER — PENNSYLVANIA
PORTSMOUTH NAVAL SHIPYARD — KITTERY, ME.

FIGURE 2: SITE PLAN MAP
INDUSTRIAL WASTE TREATMENT PLANT

APPROVED — DATE 4/20/94 — NORTHDIV FOR COMMANDER, NAVFAC

Apr 20, 1994 - 11:02 PLOT SCALE FACTOR: 1=50 CAD DWG. FILE NAME: FIG2.DWG

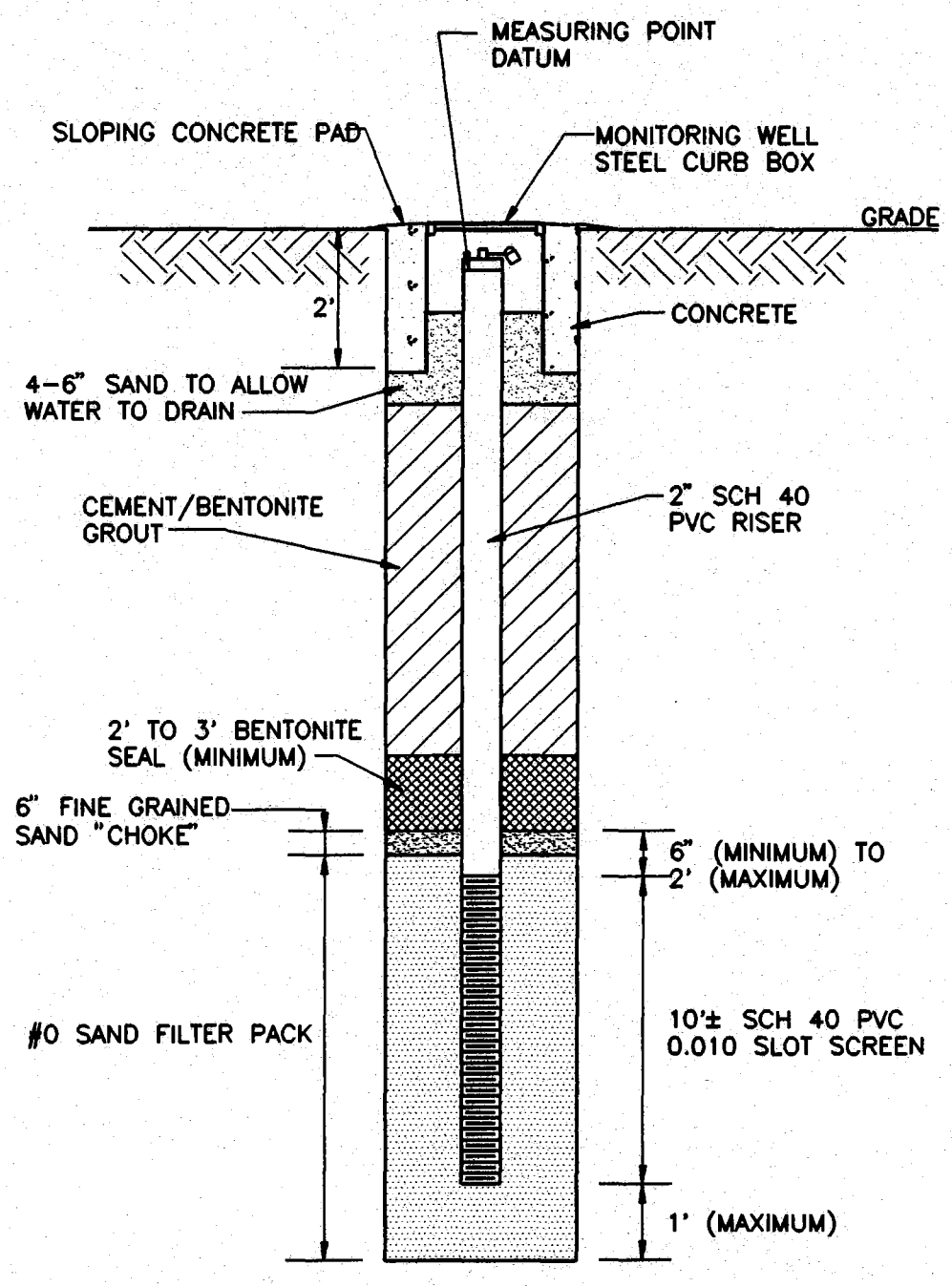

SIZE:	SHEET 3 OF 4	DEPARTMENT OF THE NAVY	NAVAL FACILITIES ENGINEERING COMMAND
	DIS. SH. NO. FIGURE 3	NORTHERN DIVISION	
		LESTER	PENNSYLVANIA
		PORTSMOUTH NAVAL SHIPYARD	KITTERY, ME.
	NAVFAC DRAWING NO.	**FIGURE 3**	
	CONSTRN. CONTR. NO.	**TYPICAL OVERBURDEN MONITORING WELL**	
	SPEC. NO.		
	SCALE : NONE		
	CODE I.D. NO.		
SAT TO	DATE	APPROVED	DATE 4/20/94 NORTHDIV FOR COMMANDER, NAVFAC

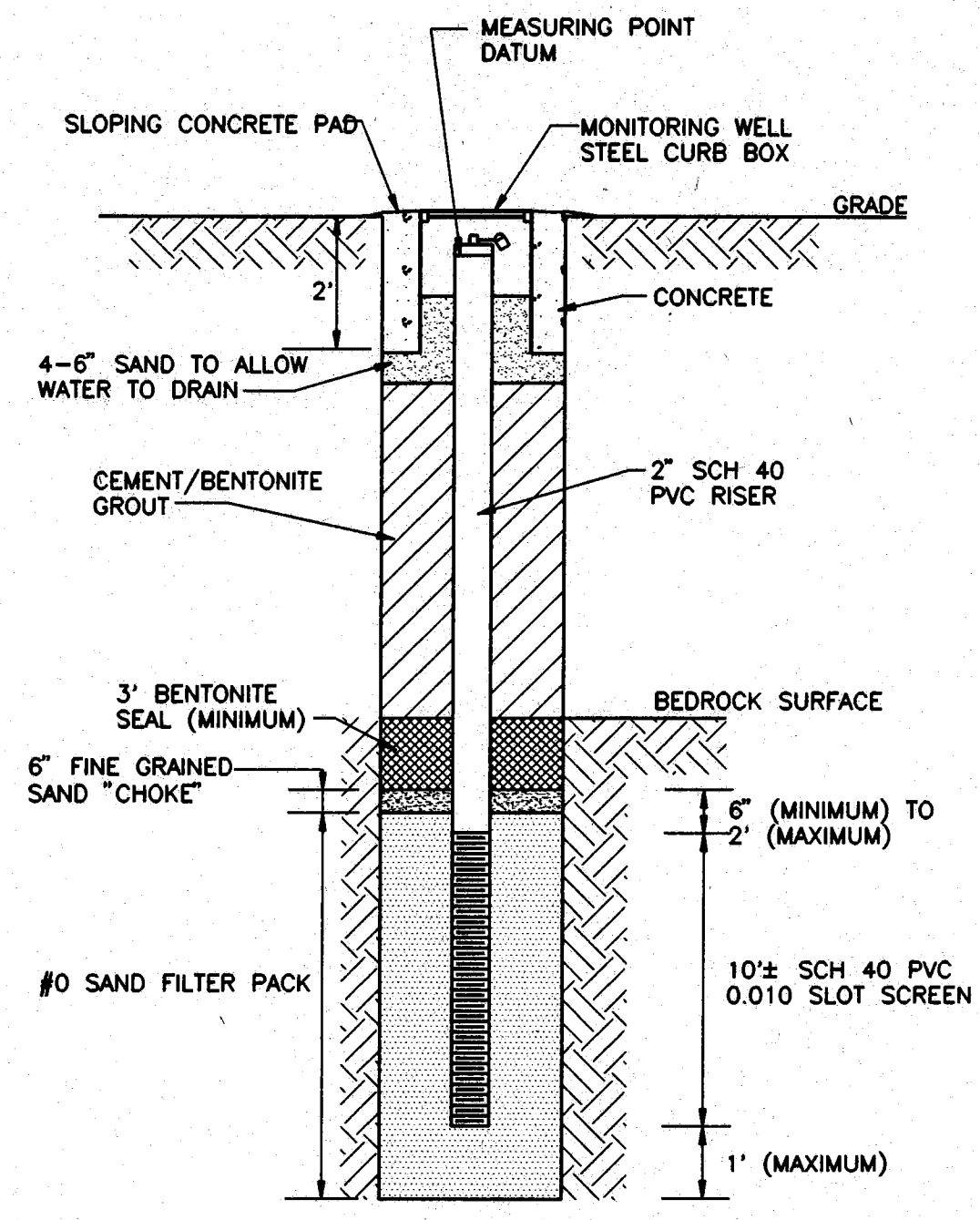

SIZE:	SHEET 4 OF 4	DIS. SH. NO. FIGURE 4	NAVFAC DRAWING NO.
CONSTRN. CONTR. NO.	SPEC. NO.	SCALE : NONE	CODE I.D. NO.
SAT TO	DATE		

DEPARTMENT OF THE NAVY — NAVAL FACILITIES ENGINEERING COMMAND

N O R T H E R N D I V I S I O N

LESTER — PENNSYLVANIA

PORTSMOUTH NAVAL SHIPYARD — KITTERY, ME.

FIGURE 4

TYPICAL BEDROCK MONITORING WELL

APPROVED — DATE 4/20/94 — NORTHDIV FOR COMMANDER, NAVFAC

APPENDIX A

TEST BORING/MONITOR WELL CONSTRUCTION LOG FOR EXISTING WELL DW-03

McLaren Hart

TEST BORING LOG

BORING/WELL LOCATION SKETCH MAP

N

BORING/WELL NO.	DSB-3
PROJECT NO./NAME	14-0000005/NAVFAC
LOCATION	Kittery, Maine
DRILLING CONTRACTOR/DRILLER	CATOH/Dennis Barrow
MCLAREN/HART GEOLOGIST/OFFICE	Jon Klink/Albany
DRILLING EQUIPMENT/METHOD	Acker S. Max/Hollow Stem Auger
SIZE/TYPE OF BIT	4 1/4" ID/Carbide
SAMPLING METHOD	SS 2" O.D.
START/FINISH DATE	11/9/89-11/10/89
WELL INSTALLED?	YES ☒ NO ☐
RISER MAT./DIA.	PVC/2"
SCREEN:	TYPE Slotted MAT. PVC LENGTH 10' DIA. 2" SLOT SIZE 0.010"
ELEVATION OF: (FT. ABOVE M.S.L.)	GROUND SURFACE 108.48; TOP OF RISER 110.69; TOP & BOTTOM SCREEN 98.48/88.48; GW SURFACE; DATE
REMARKS:	

Depth (ft)	Sample No.	Recovery (ft)	Penetration Resistance Blows/6"	Unified Classification	LOG OF TEST BORING: DESCRIPTION	REMARKS	PID Reading (ppm)
	DSB-3(0-2)	0.5	4, 12, 14, 14	GM, GM	Rd $, s(-) cmf S, l cmf G; metal dbr (0.3); Dk br $, s cmf S, l cmf G; angular G. Dark brown SILT, some coarse to fine Sand, little coarse to fine Gravel; angular Gravel	No Rad readings; wet	-
						Augered through blasted rk 0-5'	0
					(3.5) Inferred		
5		0.2	6, 8, 8, 9	GP	Dk gr cmf G, t Cy$; G is angular metamorphic rk fgmts; occ wh quartzite (iron oxide stained)	No Rad readings; wet	0
						Augered through blasted rk 5-10'	
					(FILL)		

Well Const. / Graphic Litho Log

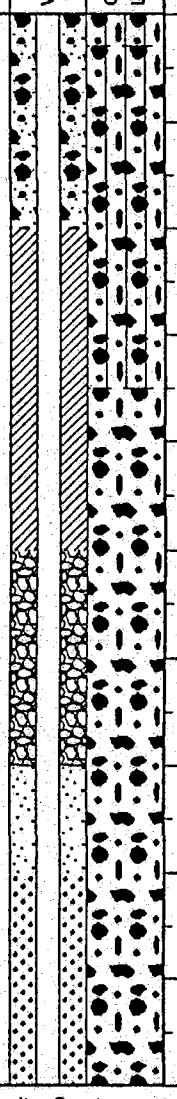

Find Sand; Medium Sand; Bentonite Pellets; Cement/Bentonite Grout; Concrete; Medium Sand with slotted pipe; Medium Sand at bottom; Bentonite Chips; Bentonite Chips at bottom

Continued

McLaren Hart

BORING/WELL NO. DSB-3

LOG OF TEST BORING (continued)

Depth (ft)	Sample No.	Recovery (ft)	Penetration Resistance Blows/6"	Unified Classification	DESCRIPTION	REMARKS	PID Reading (ppm)
			7			No rec.	
		0.0	9				0
			3				
			11			Water @12.0'	
15						No rec.	
			8				
		0.0	7				
			7				
			1				
20			7	GP	Dk gr cmf G; G is rk fgmts; occ wh quartz; occ shell fgmts	Measured water level on rod @12.0'	
		0.2	100/0.5		Dark gray coarse to fine GRAVEL; Gravel is rock fragments; occasional white quartz; occasional shell fragments		
					(FILL)		

Well Const. / Graphic Litho Log

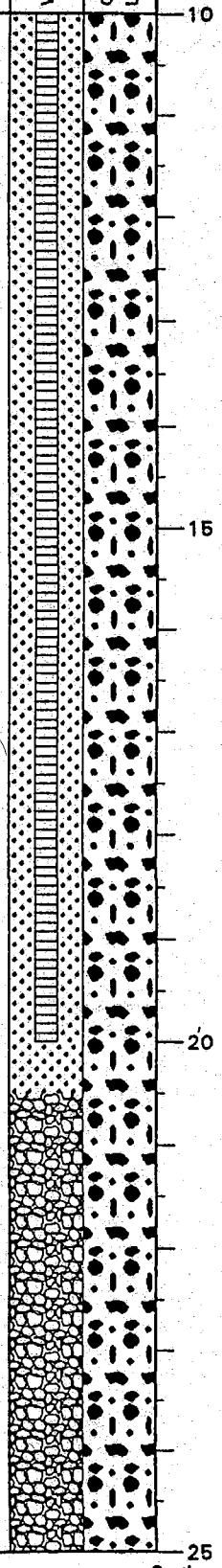

Continued

BORING/WELL NO.
DSB-3

McLaren Hart

LOG OF TEST BORING (continued)

Depth (ft)	Sample No.	Recovery (ft)	Penetration Resistance Blows/6"	Unified Classification	DESCRIPTION	REMARKS	PID Reading (ppm)	Well Const.	Graphic Litho Log
			5	GP	Dk gr cmf G; G is rk fgmts	Refusal @26.5'			
		0.1	9		(FILL) 26.3				
			80/0.3						
						Weathered and highly fractured bedrock			
30									
					(WEATHERED BEDROCK) 35.0				
35						Competent bedrock @35.0'; 5' section of broken core barrel left in borehole from 30-35'			
					(BEDROCK)				
					End of Boring @36.5'				

25 30 35 40

APPENDIX B

FIELD DATA AND SAMPLING QUALITY ASSURANCE/QUALITY CONTROL FORMS

FIELD REPORT

PROJECT: FIELD REPORT NO.:

CONTRACT/CONTRACTOR: PROJECT NO.:

DATE: ARRIVAL TIME: WEATHER: TEMP. RANGE

EST. % OF COMPLETION CONFORMANCE WITH SCHEDULE (+ -)

WORK IN PROGRESS PRESENT AT SITE

OBSERVATIONS

ITEMS TO VERIFY

INFORMATION OR ACTION REQUIRED

ATTACHMENTS

REPORT BY:

Sheet ___ of ___

FIELD REPORT

PROJECT: PROJECT NO.:

DATE/TIME	ACTIVITIES/OBSERVATIONS

Sheet ____ of __

FIELD AUDIT CHECKLIST
SUBSURFACE INVESTIGATIONS AND SAMPLING

PROJECT NAME: _____
PROJECT LOCATION: _____
CHECKED BY: _____ PROJECT NO. _____
DATE: _____ TIME: _____ WEATHER/TEMP.: _____
PRESENT AT SITE: _____
WORK IN PROGRESS: _____

ITEM DESCRIPTION	REMARKS
PRIOR TO START OF WORK:	
Site Contact Notified of Arrival	
Health and Safety Plan Available	
Health and Safety Plan Signed Off	
Work Plans Available	
Underground Utilities Cleared	
Protective Clothing and Equipment on Hand	
Test Pits, Borings or Well Locations Staked	
Well Drilling Permits Secured	
Decontamination Pad In Place and Secured	
Decontamination Equipment and Solutions on Hand	
Exclusion Zone Secured	
Equipment Decontaminated	
Contractor Equipment and Materials Adequate and Approved	
Monitoring and Field Test Equipment Calibrated	
Drums for Decon Water and Soil Cuttings Available	
Sample Containers and Labels, Coolers, Ice/Ice Packs Ready	
DURING WORK:	
Protective Clothing and Equipment Worn	
Air Monitoring Being Conducted	
Formation Samples Properly Taken and Labeled	
Hydro Punch Samples Properly Taken and Labeled	
Laboratory Samples Properly Taken Containerized and Labeled	
Equipment Blanks and Replicates Taken	
Laboratory Samples Kept Chilled	
Transport Blanks in Cooler with Volatile Samples	
Sampling Equipment Properly Decontaminated in Between Each Use	
Field Report Kept	

Recycled Paper

FIELD AUDIT CHECKLIST
SUBSURFACE INVESTIGATIONS AND SAMPLING
(CONTINUED - PAGE 2)

ITEM DESCRIPTION	REMARKS
Test Boring or Test Pit Logs Prepared	
Monitoring Well Construction Diagrams Prepared	
Materials Used and Type Noted	
Used Equipment to be Decontaminated Placed on Poly	
Abandoned Borings/Wells Properly Grouted and Staked	
Chain of Custody Record Completed	
Field Measurements (Headspace, etc.) Taken	
Protective Guard Pipe or Curb Box Properly Installed	
Well Cap Installed and Locked	
Monitoring Well Development Adequate	
Decontamination Wastes Properly Collected and Stored	
SURFACE AND GROUNDWATER SAMPLING:	
Field Instruments Calibrated	
Sampling Area Prepared with Clean Polyethylene Sheeting for Sampling Equipment	
Integrity of Well Noted	
Water Levels Taken	
Water Level Probe Properly Decontaminated Between Use	
Well Purged the Required Volumes	
Proper Sampling Equipment Utilized	
Laboratory Samples Properly Taken Containerized and Labeled	
Equipment Blanks and Replicates Taken	
Laboratory Samples Kept Chilled	
Transport Blanks in Cooler with Volatile Samples	
Sampling Equipment Properly Decontaminated in Between Each Use	
Field Report Kept	
Water Sampling Log Completed	
Groundwater Sampling Log Completed	
Field Measurements Taken	
Chain of Custody Record Completed	

/cmd

C.T. MALE ASSOCIATES, P.C. **BORING NO.:**

TEST BORING LOG

CLIENT:								SHEET 1 OF
DRILLING CONTRACTOR:								PROJECT NO.:
PURPOSE:								ELEVATION:
Groundwater					Casing	Sample	Core	DATUM:
Date	Time	Depth	Casing	Type				DATE STARTED:
				Diameter				DATE FINISHED:
				Weight				DRILLER:
				Fall				INSPECTOR:

Depth Ft.	Casing Blows	Sample No.	Blows on Sample Spoon per 6"	Unified Classi-fication	Graphic Log	IDENTIFICATION	REMARKS

C.T. MALE ASSOCIATES, P.C.

BORING NO.

TEST BORING LOG

CLIENT:	SHEET OF
	PROJECT NO.:

Depth Ft.	Casing Blows	Sample No.	Blows on Sample Spoon per 6"	Unified Classi-fication	Graphic Log	IDENTIFICATION	REMARKS

Well No. _____

MONITOR WELL CONSTRUCTION LOG

C.T. Male Associates, P.C.

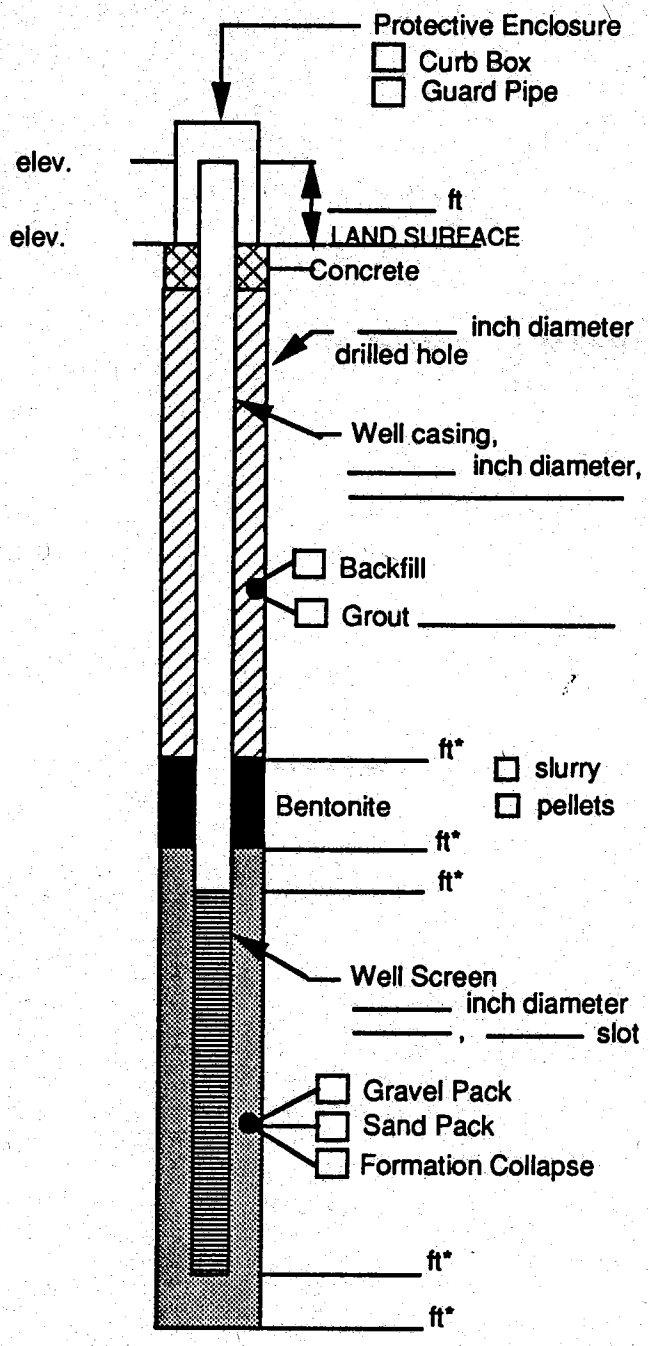

*Depth below land surface.

Project Number _____

Project Name _____

Town/City _____

County _____ State _____

Well No. _____ Boring No. _____

Permit No. _____

Installation Date(s) _____

Drilling Contractor _____

Drilling Method _____

Water Depth From Top of Riser _____ ft _____ Date

Drilling Inspector Present _____

Notes: _____

GROUNDWATER SAMPLING LOG

DATE:_____ PROJECT NAME:_____

PROJECT NO.:_____ PROJECT LOCATION:_____

SAMPLING PERSONNEL:_____

MONITORING WELL ID#:_____ NOTES TAKEN BY:_____

DEPTH TO WATER:_____FROM:_____ BAILER ID:_____

DEPTH TO BOTTOM:_____FROM:_____ BAILER: LAB CLEANED/FIELD CLEANED

WATER COLUMN HEIGHT:_____ BAILER: STAINLESS STEEL_____
OTHER_____

WELL CASING DIAMETER 2", 3", 4"

CONVERSION FACTORS LINEAR FEET TO GALLONS
2" = 0.16 GALLONS
3" = 0.38 GALLONS
4" = 0.66 GALLONS

WELL VOLUME:_____ GALLONS

VOLUMES PURGED:_____ GALLONS PURGE METHOD:_____

TIME STARTED:_____; TIME FINISHED:_____

OBSERVATIONS: COLOR_____, ODOR_____
SHEEN_____, TURBIDITY_____
OTHER_____

WATER RECOVERY HEIGHT:_____; RECOVERY TIME IN MINUTES:_____

FIELD PARAMETERS: pH_____, TEMPERATURE_____
CONDUCTIVITY_____UMHO/CM, OTHER_____

SAMPLE COLLECTION TIME:_____

NOTES:_____

Sheet ___ of ___

WATER SAMPLING LOG

DATE: _____ PROJECT NO: _____

SAMPLING PERSONNEL: _____ PROJECT NAME: _____

_____ PROJECT LOCATION: _____

SAMPLING LOCATION: _____ _____

_____

SAMPLE COLLECTION TIME: _____

DEPTH OF STREAM AT SAMPLING POINT: _____

WIDTH OF STREAM: _____

STREAM VELOCITY: _____

WATER LEVEL AT MEASURING POINT: _____

OBSERVATIONS: COLOR _____, ODOR _____

SHEEN _____, TURBIDITY _____

OTHER _____

FIELD PARAMETERS: pH _____

TEMPERATURE _____

CONDUCTIVITY _____

OTHER _____

NOTES: _____

_____

_____

_____

_____

_____

_____

Sheet ___ of ___

HEADSPACE ANALYSIS LOG

PROJECT _____	PAGE OF
CLIENT _____	DATE
LOCATION _____	COLLECTED
INSTRUMENT USED _____ LAMP _____ EV	DATE
DATE INSTRUMENT CALIBRATED _____ BY _____	ANALYZED
TEMPERATURE OF SOIL	ANALYST

EXPLO-RATION NUMBER	SAMPLE NUMBER	DEPTH (FT.)	SAMPLE TYPE	SAMPLE READING (PPM)**	BACKGROUND READING (PPM)**	REMARKS

*Instrument was calibrated in accordance with manufacturer's recommended procedure using a calibration gas supplied by the manufacturer.

**PPM represents concentration of detectable volatile and gaseous compounds in parts per million of air.

WATER LEVEL RECORD

Project Name_____ Project Number_____

Location_____ Measurement Taken By_____

Method of Reading_____ Datum_____

		Date_____		Date_____		Date_____	
Well No.	Ref. Elev.	Depth	Elev.	Depth	Elev.	Depth	Elev.

Measuring Point(s)_____

_____

EXAMPLE:

CTM Analytical Laboratories, Ltd.
15 Century Hill Drive
P.O. Box 727
Latham, NY 12110
518-786-7100
FAX 518-786-7139

CHAIN OF CUSTODY RECORD
LABORATORY SERVICES

CTM TASK # _____

Client _____ Sampler's Name _____
Client Contact _____ (please print)
Project Location _____ CTM Contact _____
Purchase Order _____ Turnaround Time Requested _____

CTM LAB ID	Sample ID/Description	Date Sampled	Time A = a.m. P = p.m.	Sample Type: Matrix	Sample Type: COMP	Sample Type: GRAB	# of Containers	Preservative (list by # from list below)	Analysis Required

Sampled by: (signature)	Date/Time	Received by: (signature)	Date/Time
Relinquished by: (signature)		Received by: (signature)	
Relinquished by: (signature)		Received by: (signature)	
Dispatched by: (signature)		Received for Laboratory by:	

Preservatives

1. HCl	6. Ascorbic
2. HNO_3	7. H_2SO_4
3. NaOH	8. F (Filtered)
4. NaS_2O_3	9. N (not preserved)
5. Zn Acet	10. Other

Sample Condition

1. Samples intact? Y N
2. Custody seals intact? Y N
3. Preserved properly? Y N
4. Ambient or chilled?
5. C.O.C. received with samples? Y N

NOTES/COMMENTS:

Method of Shipment:

Date:

APPENDIX C

CTM ANALYTICAL LABORATORIES, LTD. QUALITY ASSURANCE PROGRAM PLAN

QUALITY ASSURANCE PROGRAM PLAN

CTM ANALYTICAL LABORATORIES, LTD.
15 Century Hill Drive
Latham, NY 12110

518-786-7100

Revision No. 2.1

February 1994

CONFIDENTIAL

This document contains proprietary information. It is made available by CTM Analytical Laboratories, Ltd. to its clients and certification agencies on a proprietary basis. This document remains the property of CTM Analytical Laboratories, Ltd. and shall not be duplicated or disclosed, in whole or part, without the expressed, written authorization of CTM Analytical Laboratories, Ltd.

Document No.: 489

Issued To: Miriam McGiver - C.T. Male Associates

Date: 2/23/94

AUTHORIZATION

This Quality Assurance Program Plan (Rev. 2.0) is authorized for use and distribution by:

Mr. Vincent S. Sciabica
President, Laboratory Director _____

Dr. Jeannie C. Yuan
Quality Assurance Officer _____

TABLE OF CONTENTS

1.0 INTRODUCTION AND STATEMENT OF POLICY..... 4

2.0 MANAGEMENT ORGANIZATION AND RESPONSIBILITY..... 4

2.1 Structure..... 4
2.2 Responsibilities..... 5
2.3 Personnel..... 7
2.4 Training..... 8
2.5 Safety..... 8

3.0 QUALITY ASSURANCE OBJECTIVES FOR DATA GENERATION..... 9

3.1 Introduction..... 9
3.2 Definitions..... 9
3.3 Control Charts.....10
3.4 Specific Data Quality Objectives.....11

4.0 SAMPLING PROCEDURES.....12

5.0 DOCUMENT CONTROL.....13

5.1 Laboratory Documentation.....13
5.2 Chain of Custody.....14

6.0 CALIBRATION PROCEDURES.....15

6.1 Standards.....15
6.2 Instrument Calibration.....15

7.0 SAMPLE PREPARATION AND ANALYTICAL PROCEDURES.....16

8.0 DATA REDUCTION, VALIDATION AND REPORTING.....17

8.1 Data Reduction.....17
8.2 Data Validation.....17
8.3 Data Reporting.....19

9.0 INTERNAL QUALITY CONTROL CHECKS.....20

9.1 General.....20
9.2 Routine Quality Control Checks.....20
9.3 Non-Routine Quality Control Checks.....25

10.0 PERFORMANCE AND SYSTEM AUDITS.....25

10.1 Internal.....25
10.2 External.....26

11.0 PREVENTIVE MAINTENANCE.....26

12.0 DATA ASSESSMENT PROCEDURES.....26

13.0 CORRECTIVE ACTION.....27

14.0 QUALITY ASSURANCE REPORTS TO MANAGEMENT.....28

15.0 METHOD DETECTION LIMITS.....29

16.0 ARCHIVAL PROCEDURES.....29

TABLES

1. Calibration Specifications
2. Standard Laboratory Methods Employed
3. Method/Reporting Detection Limits
4. Laboratory Instrumentation and Equipment

FIGURES

1. Organizational Chart
2. Example Control Chart
3. External Chain of Custody Form
4. Internal Chain of Custody
5. Data Entry Sort Sheet
6. Data Flow Diagram
7. NYSDEC ASP Data Flow Diagram
8. Corrective Action Request

APPENDIX

A. Resumes of Key Personnel
B. Laboratory Safety Manual
C. Sampling Quality Control Procedures

is independent of the production function with an equivalent level of authority. The QA Officer reports to the President and Laboratory Director. The technical staff is organized in such a fashion as to provide oversight of analytical activitites by individuals who are experienced professionals in their respective areas. Staff members are thoroughly trained in both analytical procedures and safety procedures.

Figure 1 presents the organizational chart for CTM.

2.2 Responsibilities

2.2.1 Laboratory Director - Mr. Vincent S. Sciabica

The Laboratory Director has ultimate responsibility for all activities within the laboratory. He sets policy and directs the activities of the QA Officer, Laboratory Group Supervisors and Marketing Manager toward the implementation of those policies. The Laboratory Director ensures that adequate resources are available to the operating units within the laboratory to accomplish their functions with due regard for technical quality and timeliness.

2.2.2 QA Officer - Dr. Jeannie C. Yuan, PhD.

It is the function of the QA Officer, working in concert with the Laboratory Director and Technical staff, to develop and document Quality Assurance and Quality Control procedures. The QA Officer is responsible for the collection of information relative to the performance of the technical function in adhering to the specifications defined. When data gathered indicates the presence of non-conforming events or an opportunity to improve performance , the QA Officer directs investigation and design of solutions or improvments. She reviews and issues all laboratory reports. Specifically, the QA Officer is responsible for:

1. Periodic review of lab notebooks
2. Maintenance of control charts
3. Verification of equipment integrity
4. System and performance audits
5. Corrective action
6. Document control
7. Laboratory Certification
8. Update of Standard Operating Procedures
9. Introduction of inhouse proficiencies
10. Training/certification records

2.2.3 Laboratory Scheduler/Client Services Coordinator - Mr. Prince Knight

He is responsible for the scheduling of the production groups and for ensuring adherence to schedules. Specific tasks include:

1. Establish production schedules
2. Monitor performance to schedules
3. Coordinate client services
4. Project management

2.2.4 Technical Services Manager - Ms. Kim Evans

The Technical Services Manager is responsible for ensuring that a clear understanding exists between the client and the technical staff regarding the technical specification of each project. She will define methods, deliverables, schedules and other pertinent information for the technical group. Specific tasks include:

1. Point of contact with client
2. Define client specific project specifications
3. Clearly communicate specs to project manager

2.2.5 Office Manager - Ms. Kim Evans

The Office Manager has the responsibility of supervising office personnel and associated support staff. She is responsible for scheduling office tasks based on daily workload. These tasks include:

1. Training and cross training office personnel
2. Supervise login activities
3. Supervise report generation and associated activities
4. Supervise bottle preparation

2.2.6 Group Supervisors

There are two Group Managers and six Group Supervisors within the laboratory technical staff. These are:

Organic Manager	Mr. Gregory Grandits
Inorganic Manager	Mr. William Murry
Classical Chemistry	Mr. John Dombroski
Metals Analysis	Mr. Rick Campbell

Field Services	Mr. Greg Whittle
GC/Mass Spec	Mr. Brian Bush
Gas Chromatography	Ms. Lorraine Toran
Sample Preparation	Mr. David O'Hehir

The Group Supervisors are charged with the responsibility to direct the day to day activiites of chemists and other technical staff engaged in sampling, analysis and data review activities. They provide technical guidance as needed in their respective areas of expertise. The Group Supervisors are responsible for ensuring, through training, oversight, review and feedback, that personnel in their respective areas carry out their tasks in conformance with Standard Operating Procedures and this Quality Assurance Program Plan. Specific tasks include: The Office Manager has the responsibility of supervising office personnel and associated support staff.

1. Review of data generated at the bench
2. Coordinate workloads in their areas
3. Technical problem resolution
4. Establish and monitor training programs
5. Periodically review laboratory performance
6. Direct equipment maintenance activities
7. Maintain adequate supplies
8. Project managemant

2.3 Personnel

All of the technical staff meet or exceed the minimum experience guidelines established by the USEPA/NYSDEC for their areas of expertise. These are:

GC/MS Operators.....1 year
MS Interpretation Specialist.....2 years
GC or GC/MS Purge & Trap Expert...1 year
Extraction Specialist.....1 year
Pesticide Analyst.....2 years
ICP Spectroscopist.....2 year
Furnace AA Spectroscopist.....1 year
Flame AA Spectroscopist.....1 year
Inorganic Sample Prep.....6 months
Classical Chemistry Tech.....6 months
Inorganic Analysis.....6 months
Sampling Technician.....1 year
Sample Custodian.....1 year

Resumes for the key staff members are attached as Appendix A.

2.4 Training

All candidates for technical staff positions are screened prior to employment for an appropriate level of education and experience. To augment that education and experience, CTM provides its employees with detailed training in laboratory Standard Operating Procedures, Quality Assurance awareness, safety and emergency preparedness and company specific matters of policy and procedures.

The laboratory training program revolves around USEPA/ NYSDEC ASP methods for organic and inorganic analysis and internal Standard Operating Procedures. No employee will be released to execute any analytical procedure unsupervised until that employee has:

1. Observed the operation performed by an experienced analyst.
2. Executed the procedure under close supervision and with reference to the method and/or Standard Operating Procedure
3. Demonstrated the ability to correctly perform the procedure without access to the method and/ or Standard Operating Procedure
4. Demonstrated a clear understanding of common problems associated with the procedure and corrective action
5. Read and demonstrated a familiarity with all laboratory health and safety procedures

The training each employee receives will be documented by the use of a copy of the USEPA/NYSDEC ASP method and/or Standard Operating Procedure signed by both the employee and the Group Supervisor for that area. A file of this documentation is maintained by CTM.

CTM recognizes the importance of on-going education in the professional development of its staff and will support that development through various means such as:

1. Tuition re-imbursement
2. Fully paid seminar attendance
3. Flexible schedules to accommodate education

2.5 Safety

The creation and maintenance of a safe working environment for all laboratory staff is of paramount importance. In light of this, CTM has established a Laboratory Safety Manual

which is attached as Appendix B. Mr. David O'Hehir is the designated Safety Officer for the laboratory. Please see Appendix B for detailed information related to CTM's safety programs.

3.0 QUALITY ASSURANCE OBJECTIVES FOR DATA GENERATION

3.1 Introduction

It is the goal of CTM's analytical programs to produce data which is technically and legally valid and of known quality. In order to ensure the accomplishment of these goals, Data Quality Objectives (DQO's) are established for each measurement parameter in terms of precision, accuracy, completeness, representativeness and comparability. The attainment of these DQO's is the focus of CTM's quality assurance programs.

DQO's can vary depending upon the nature of the investigation undertaken, the intended use of the data generated and the likelihood of litigation. It is the policy of CTM to uniformly apply the highest standards in terms of DQO's to all analytical work performed in the laboratory.

3.2 Definitions

3.2.1 Precision

Precision is the measure of the degree of mutual agreement among individual measurements of the same property under similiar conditions. Precision is measured through the use of duplicate sample analysis in which two (2) representative aliquots of the same sample are run under closely controlled standard conditions. The results of the duplicate analysis are then compared. In mathematical terms precision is defined as:

$$RPD = \left(\frac{m1 - m2}{(m1+m2)/2} \right) * 100$$

where: RPD is the Relative Percent Difference
m1 is the first measurment
m2 is the second measurment

3.2.2 Accuracy

Accuracy is the measure of the degree of agreement between a measured value and a known value. This DQO is measured through the use of spiked samples in which a known amount of a standard compound is introduced into an aliquot of sample and upon analysis the known and measured values are compared. Accuracy is defined mathematically as:

$$PD = \frac{X}{K} * 100$$

where: PD is the Percent Difference
X is the measured value
K is the known value

3.2.3 Completeness

Completeness is a measure of the amount of valid data derived from a measurement system compared to the amount of data that would be expected from that measurement system under normal conditions.

3.2.4 Representativeness

Representativeness expresses the degree to which data accurately represent actual conditions of the system being measured. This is a function of the appropriate selection of sample location and the uniform application of correct sampling techniques.

3.2.5 Comparability

Comparability expresses the degree to which one data set may be compared to another data set. This is a function of the consistent use of measurment protocols and the use of consistent units of measure.

3.3 Control Charts

Precision and accuracy measures of data quality are plotted on control charts in each of the laboratory sections. Control charts are used to:

1. Monitor laboratory performance
2. Identify conditions which require corrective actions
3. Establish QC criteria

Control charts are established using the results of 20 analytical tests of a given parameter and averaging the results. The average result becomes the center line of the control chart. Warning limits are established at two standard deviations above and below the center line. Control limits are established at three standard deviations above and below the center line.

CTM establishes control charts using a line graph format employing available software (i.e. PFS First Choice). Control and matrix spike recovery and duplicate precision data are entered into the computer system and the resulting control charts are reviewed for indications of loss of analytical control. Loss of analytical control is indicated by:

1. Any one point outside of established control limits
2. Any three consecutive points outside warning limits
3. Any eight consecutive points on the same side of the center line
4. Any six points such that each succeeding point is larger (or smaller) than its predecessor
5. Obvious cyclic patterns

The identification of any of the above listed conditions is cause for the Quality Assurance Officer to initiate corrective action procedures. (See section 13 for more information on corrective actions.)

Control charts are periodically reviewed and the center line, warning and control limits recalculated. The effect of this process is to continually tighten the quality control acceptance criteria in use in the laboratory. An example control chart is attached as Figure 2.

3.4 Specific Data Quality Objectives

3.4.1 Accuracy

Data Quality Objectives for accuracy are specific to the method used and the matrix analyzed. CTM uses control charts to establish accuracy requirements within the laboratory. These objectives will meet or exceed the requirements of the methods employed.

3.4.2 Precision

The Data Quality Objectives for precision are also method and matrix specific. CTM uses control charts to establish precision requirements within the laboratory. These objectives will meet or exceed the requirements of the methods employed.

3.4.3 Completeness

The Data Quality Objective for completeness is dependent upon matrix. Water samples rarely fail to conform to method QC specifications. Soil/solid matrices are more likely to suffer failure and, historically, oil, sludge and waste samples produce results that are even less in exact conformance with method QC specifications. Thus, CTM has established the following completeness objectives:

Water.....98%
Soil/Solid.....95%
Waste/Oil/Sludge.....90%

3.4.4 Representativeness

The laboratory will make every effort to ensure the representativeness of the aliquots taken for analysis. Standard protocols, including provision for discarding oversized particles, thorough mixing (cone and quartering where applicable), compositing and provisions to protect samples from cross contamination will be employed. Thus, the aliquot analyzed will be representative of the sample submitted for analysis.

3.4.5 Comparability

Provisions used to ensure representativeness will also be used to ensure comparability. In addition, standard methods will be used in the preparation and analysis of samples to further ensure the comparability of results. See Table 2 for standard methods employed.

Please refer to sections 9.0 and 12.0 for additional information regarding specific Data Quality Objectives.

4.0 SAMPLING PROCEDURES

Quality Assurance begins in the field. The importance of correct sampling procedures should be a priority concern of any laboratory. CTM has a fully trained and highly

experienced sampling team. Their objectives for quality control are covered in Appendix C of this document.

5.0 DOCUMENT CONTROL

Documentation is probably one of the most important procedures a laboratory can implement to assure all quality objectives are being met.

5.1 Laboratory Documentation

Each department maintains bound laboratory notebooks in a different manner.

Classical Chemistry - requires notebooks both personally and/or according to parameter. These contain such information as:

1. Diary of activities
2. Raw data from analytical processes
3. Calculations from raw data
4. Notations regarding unusual circumstances
5. Chronology

Metals and Organics - requires instrument notebooks that contain the same information listed above or files of the raw data.

In addition, each major instrument has a log book in which is recorded such information as:

1. Calibration performance and adjustments
2. Maintenaince records
3. Instrument performance notations

A laboratory-wide log book of calibration and performance checks on equipment is maintained daily and is periodically checked by the Quality Assurance Officer. It contains:

1. Refrigerator temperatures
2. Thermometer calibrations and corrections
3. pH meter calibration
4. Conductivity meter calibration
5. Laboratory water checks
6. Analytical balance calibration
7. Oven temperatures
8. Glassware integrity checks

If there are any deviations from the quality assured norms for the readings of the above equipment, the Quality Assurance Officer is contacted and a resolution to the

Assurance Officer is contacted and a resolution to the problem is undertaken.

These laboratory notebooks are filed upon completion in the laboratory library and are kept for a minimum of six years. All forms of raw data , both hard copy and media, are maintained by the laboratory for a minimum of six years from the delivery of the associated analytical report.

5.2 Chain of Custody

CTM recognizes that the analytical data generated in the laboratory is often needed as the result of a legal or regulatory requirement, or may become evidence in litigation. Projects that involve Contract Laboratory Protocol, NYSDEC ASP or other special client requests need to be carefully documented.

At the time of sampling an 'external' chain of custody is initiated and travels with the samples to the laboratory. An important component of the sample check-in procedure is to verify that the chain of custody is properly and completely filled out. Any deviations noted, including:

1. Improper preservation
2. Presence of air bubbles in volatile samples
3. Damage to containers
4. Evidence of tampering
5. Elevated temperatures
6. Insufficient sample volume

will be noted on the chain of custody form at the time the samples are received. The chain of custody is then signed as having been received by the laboratory. After assigning a unique laboratory number the samples are logged into the CLP Login Book and the Laboratory Information Management System (LIMS). The LIMS allows laboratory management to track the status of samples during the analytical, review and reporting processes so as to ensure integrity of holding times and delivery schedules. At this time an 'intra-laboratory' chain of custody is initiated to track the samples through the laboratory.

Once the samples are logged in and paperwork verified, Ms. Kimberly Evans, Sample Custodian, transports the samples and intra-laboratory chain of custodies to the secured storage areas. All authorized laboratory personnel must sign samples in and out whenever used.

If projects do not need special documentation, such as CLP, the same laboratory procedures apply with the exception of the intra-laboratory chain of custody. The LIMS is then

Copies of CTM's chain of custody forms, external and internal are attached as Figures 3 and 4.

Further information concerning sample custody is included in CTM's NYSDEC ASP Standard Operating Procedures for Sample Storage, May, 1992.

6.0 CALIBRATION PROCEDURES

The purpose of the calibration procedures used at CTM is to ensure optimum instrument performance. This process also allows CTM to demonstrate and document the degree of correlation between measured values and actual field conditions. There are two important parts to the calibration process - The production and use of certifiable standards and the measurement/adjustment of instrument response. A listing of laboratory instrumentation is given in Table 5.

6.1 Standards

CTM uses standards which are traceable to USEPA sources for organic and metals analyses. In the classical chemistry area standards are mixed in-house from reagent grade chemicals. The standards will be diluted to varying concentrations within the laboratory. Standard solutions are self life controlled and validated against older standards prior to their use in the laboratory. Standard materials are routinely checked for any signs of degradation or deterioration. Sources for standard materials are: Supelco, Baker, Accustandard, Chemservice, Spex, Fisher and Inorganic Ventures.

Laboratory control samples consist of USEPA certified standards with known values and confidence limits purchased through private vendors.

Blank water used in the laboratory is obtained from the Milli-Q water purification system and tested daily for pH and conductivity. Blank water is further tested by processing an aliquot of the water through the procedure in which it is used.

6.2 Instrument Calibration

Prior to their use, all instruments are carefully tuned and/or calibrated according to the specification of the manufacturer. Instruments are then subject to periodic

tuning/calibration according to the specifications of the method involved. Table 1 provides a detailed summary of the tuning/calibration frequencies and acceptance criteria used by CTM.

7.0 SAMPLE PREPARATION AND ANALYTICAL PROCEDURES

CTM routinely performs analyses on a wide variety of materials for a wide variety of constituents. For this reason the laboratory is prepared to provide analysis by many different methods. The choice of method is generally determined by the intended use of the data. CTM recommends the use of methods which are appropriate to the regulations involved in the project. If there is no regulatory involvement, CTM recommends the use of methods based on the matrix type and level of quality assurance documentation required. All standard methods employed are approved by the NYS Department of Health, NYSDEC ASP and USEPA.

Sources for the methods used at CTM include:

1. 40 CFR pt. 136
2. EPA 600 4-79-020 Rev. 1983
3. SW-846, 3rd Edition
4. USEPA Contract Laboratory Statement of Work
5. ASTM
6. USGS
7. Standard Methods, 15th and 16th Edition
8. NIOSH
9. NYSDEC Analytical Services Protocol

Before any method is performed in the laboratory, it is subject to a validation process. The method validation process combines the requirements of a detection limit study (as defined in 40 CFR pt. 136) and the establishment of QA acceptance criteria which must meet or exceed the requirements of the method. Instrument detection limits are revised quarterly based on empirical data. Quality assurance acceptance criteria are also revised quarterly based on control chart data for precision and accuracy.

Table 2 provides a summary of sample preparation and analytical methods used by CTM. Method detection limits are provided in Table 3. These detection limits are highly matrix dependent and are provided for reference only.

8.0 DATA REDUCTION, VALIDATION AND REPORTING

8.1 Data Reduction

The data reduction scheme describes the means by which raw data is processed into a final product. This will entail the calculation of multiple data points into a single result and the movement of that result from the data collection medium into a finished report.

All standard chromatograpic work stations (GC and HPLC) are interfaced to an HP3359A Laboratory Automation System. The GC Mass Spectrometer systems are interfaced to HP1000 data systems for instrument control and data processing. All other automated equipment (A/A, ICP) have their internal computer systems for data acquisition, manipulation and display. Each of these systems provide raw data and the results of calculations in hard copy format for review by the operator and/or data validator. In addition, this same information is stored on magnetic media kept off-site at Shaker Computer, Latham, NY, such that it can be retreived and utilized at a later date if necessary.

Manual data acquisition and reduction is performed in the laboratory notebooks discussed in section 5.1 of this plan. The laboratory notebook will contain all of the data points required for a calculation and the result of that calculation in the same place in the notebook. Extreme care is taken to ensure that all entries are legible and the responsible chemist is identified. Standard protocols are in place regarding changes in the notebooks and periodic review by department supervisors and Quality Assurance Officer.

The results of calculations are recorded onto a laboratory sample sort (computer printout). These sorts are made daily and include all samples in-house for a given parameter or area. An example sort is attached as Figure 5. The sorts are forwarded to the report preparation group where the results of the analysis, batch QA data and other materials requested are integrated into the final report. A data flow diagram is attached as Figure 6.

8.2 Data Validation

Data validation is the process by which the laboratory reviews the data reduction process in an effort to identify, research and, if necessary, correct or qualify data reports.

CTM employs a three tiered approach to quality control within the laboratory. The first level review is at the bench. The technician responsible for the data generation is

responsible to ensure that all applicable QC criteria (spike recovery, duplicate precision, etc.) are met. This includes notations regarding instrument performance and observations of the analytical process which might have impact on the result (matrix, emulsification, etc.). This individual is charged with the responsibility to ensure completeness of the data set, appropriateness of the techniques used and that all associated documentation is organized and available.

The second tier of data validation provides critical review of the work performed by the bench chemist. The Group Supervisor will review the data set to ensure:

1. Tuning/calibration meets specifications
2. All QC data meets specifications
3. Contaminant identification is correct
4. Library search data is reasonable
5. Quantitative results are accurate (audit)
6. All documentation required for report integration is available

When the Group Supervisor is satisfied that the data set is complete and accurate, including any necessary narrative information, the data set is ready to be forwarded to report preparation.

The final review entails a review of all aspects of the data report. This includes all of the steps referenced above. If any anomalies are encountered that data set is given to the Quality Assurance Officer for correction and further detailed review. The final review also includes a reasonableness check. The Laboratory Director, having access to data from all laboratories as well as historic information regarding the site, will review the report to assess the internal and historic consistency of the data. If anomalies are noted the data is 100% reviewed for potential error.

The Quality Assurance Officer will conduct a 10% audit of all data packages. This audit will review all aspects of the data package as given above. If any anomalies are encountered these will be documented and discussed with the appropriate group supervisor. Corrective action will be implemented as required using the Corrective Action Request form, Figure 8.

Before a NYSDEC ASP data package is released the Quality Assurance Officer performs an internal validation adhering to criteria in Exhibit E of the NYSDEC Analytical Services Protocol. Refer to figure 7 for a data flow diagram of a data package.

8.3 Data Reporting

Data reporting is customized to meet the clients needs. The deliverable components of a final report may include:

1. Case narrative information
2. Sample identification and cross referencing
3. Chronology
4. Method summary/reference
5. Chain of Custody documentation
6. Sample data
   - A. Organics
     1) analytical results
     2) detection limits, instrument and method
     3) library search
     4) chromatograms
     5) Mass spectra
     6) quantitation reports
     7) Data qualifiers
   - B. Inorganics
     1) analytical data
     2) detection limits
     3) raw instrument output
     4) data qualifiers
7. QC data
   - A. Organics
     1) surrogate
     2) MS/MSD summaries
     3) method blank results
     4) tuning/calibration data
     5) internal standard area summary
     6) raw data for the above
   - B. Inorganics
     1) calibration data
     2) CRDL standard
     3) blanks
     4) ICP interference check
     5) spike recoveries
     6) post digestion spikes
     7) duplicate data
     8) lab control sample
     9) standard addition results
     10) ICP serial dilutions
     11) ICP interelement corrections
     12) ICP linear range
     13) preparation log
     14) analysis log
     15) raw data for the above

Standard reporting formats include:

1. CTM Level I (results only)
2. CTM Level II (results with QC sheets)

3. CTM Level III (results with QC sheets plus chromatograms)
4. NYS DEC ASP
5. EPA CLP
6. EPA SAS

9.0 INTERNAL QUALITY CONTROL CHECKS

9.1 General

CTM recognizes the need to constantly examine its performance in order to ensure the technical quality of the data generated in the laboratory. In order to accomplish this objective, a quality control and quality assurance program has been established which combines three elements. The three elements are:

1. General quality assurance provisions
2. Routine quality control checks
3. Non-routine quality control checks

General provisions to ensure data quality include:

1. The employment of a full time Quality Assurance Officer with the authority to set specifications, review and audit performance to specifications and initiate corrective actions.

2. The establishment of detailed documentation of methods, procedures and quality assurance requirements.

3. Detailed training of all personnel in the execution of methods, procedures and quality assurance requirements.

4. The maintenance of control charts for precision and accuracy for all measurement parameters.

5. Utilization of state of the art equipment and standardized laboratory measurement equipment, glassware, water, reagents and gases.

9.2 Routine Quality Control Checks

For each measurement parameter there are a standard set of quality control samples which are evaluated to assess the degree of process control and to further assess the effect of

the sample itself on data quality. The following are the types of QC checks which are routinely performed in the laboratory with their function.

1. Method (Instrument) Blanks - the purpose of the method blank is to assess the degree to which the analytical process has contributed to the introduction of contaminants to the sample. Specific acceptance criteria are used in evaluating method blanks. CTM employs the guidelines given in the USEPA Contract Laboratory Protocols (CLP) and the NYSDEC Analytical Services Protocol (ASP). A blank is considered acceptable under the following conditions:

A. Volatiles - The blank may not contain more than 5X the detection limit of methylene chloride, acetone, toluene or 2-butanone. The blank must not contain more than the detection limit of any other volatile analyte.

B. Semivolatiles - The blank may not contain more than 5X the detection limit of any of the pthalate esters in the target analyte list. All other analytes must be less than the detection limit.

C. Pesticides/PCB's - The method blank may not contain more than the detection limit of any analyte in the target list.

D. Metals - No contaminants may be present at greater than 10X the detection limit. (See 7/88 CLP SOW for additional information.)

E) Classical Chemistry - No analyte may appear in the blank at levels in excess of the detection limit.

Method blanks are evaluated during all three phases of data validation. If any method blank fails the above referenced criteria, all samples associated with that blank must be re-analyzed. Method blanks are run in every batch of samples and in no case at a frequency of less than 1 in 20.

2. Surrogate Spikes - Surrogate spikes, or in the case of volatiles, system monitoring compounds, are used to assess the overall performance of the method. Surrogates are non-target analytes which can be expected to perform through the analytical process in the same way as the target analytes. These are often deuterated versions of a target analyte. Every organic sample is spiked with surrogates. Failure of the surrogate spikes to meet acceptance criteria is an indication that the analytical process is not properly functioning. When this occurs the laboratory must investigate the situation to determine the cause of the failure before proceeding with any further analysis or data reduction. An

assessment of the surrogate spike result for the method blank will normally indicate if the problem results from the matrix or analytical process. Acceptance criteria are determined through control charts but in no case will they be less stringent than the requirements of the methods. The following provides typical surrogate spike recovery criteria.

SURROGATE COMPOUND	WATER LIMITS % Recovery	SOIL LIMITS % Recovery
Volatiles		
Toluene-d8	88-110	84-138
4-Bromofluorobenzene	86-115	59-113
1,2-Dichloroethane-d4	76-114	70-121
Semivolatiles		
Nitrobenzene-d5	35-114	23-120
2-Fluorobiphenyl	43-116	30-115
p-Terphenyl-d14	33-141	18-137
Phenol-d5	10-110	24-113
2-Fluorophenol	21-110	25-121
2,4,6-Tribromophenol	10-123	19-122
2-Chlorophenol-d4	33-110	20-130 (advisory)
1,2-Dichlorobenzene-d4	16-110	20-130 (advisory)
Pesticides/PCB's		
Dibutylchlorendate	24-154*	20-150*

*These limits are advisory only. Performance based criteria have not yet been developed by USEPA.

Surrogate spikes are not employed for inorganic analyses.

3. Matrix (Sample) Spikes - Matrix spikes are used to assess the effect of the sample matrix on the analytical process and provide one measure of accuracy. Matrix spike performance is also measured in terms of percent recovery. One sample in every batch is split and spiked with known concentrations of a specified set of compounds. Upon analysis the results of the matrix spike are assessed to determine if those spiked values have been recovered. Acceptance criteria are, again, performance based (control charts) but in no case will they be less stringent than the method specifications. The following provide typical acceptance criteria.

SPIKE COMPOUND	WATER LIMITS % Recovery	SOIL LIMITS % Recovery
Volatiles		
1,1 Dichloroethane	61-145	59-172

Trichloroethene	71-120	62-137
Chlorobenzene	75-130	60-133
Toluene	76-125	59-139
Benzene	76-127	66-142
Semivolatiles		
1,2,4-Trichlorobenzene	39-98	38-107
Acenapthene	46-118	31-137
2,4-Dinitrotoluene	24-96	28-89
Pyrene	26-127	35-142
N-Nitroso-di-n-propylamine	41-116	41-126
1,4-Dichlorbenzene	36-97	28-104
Pentachlorophenol	9-103	17-109
Phenol	12-110	26-90
2-Chlorophenol	27-123	25-102
4-Chloro-3-methylphenol	23-97	26-103
4-Nitrophenol	10-80	11-114
Pesticides/PCB's *		
Lindane	56-123	46-127
Heptachlor	40-131	35-130
Aldrin	40-120	34-132
Dieldrin	52-126	31-134
Endrin	56-121	42-139
4,4'-DDT	38-127	23-134

*These values are for advisory purposes only. USEPA has not yet established performance based criteria.

Metals
Metals sample spikes are spiked with known concentrations of all analytes. Acceptance criteria for pre-digestion spikes are +/- 25%. Acceptance criteria for post digestion spikes are +/- 15%.

Classical Chemistry
Table 5 provides detailed information regarding spike recovery limits used in the classical chemistry laboratory. Where a specific limit is not stipulated the working acceptance criteria are +/- 25%

4. Matrix Spike Blank - Matrix spike blanks serve the purpose of a control sample for the NYSDEC ASP methods. The matrix spike blank is analyzed concurrently with the matrix spike/matrix spike duplicate and for each matrix.

SPIKE COMPOUND	LIMITS % Recovery
Volatiles	
1,1-Dichloroethane	61-145
Trichloroethene	71-120

Benzene	76-127
Toluene	76-125
Chlorobenzene	75-130
Semivolatiles	
Phenol	12-110
2-Chlorophenol	27-123
1,4-Dichlorobenzene	36-97
N-Nitroso-di-n-proplamine	41-116
1,2,4-Trichlorobenzene	39-98
4-Chloro-3-methylphenol	23-97
Acenaphthene	46-118
4-Nitrophenol	10-80
2,4-Dinitrotoluene	24-96
Pentachlorophenol	9-103
Pyrene	26-127

SPIKE COMPOUND	WATER LIMITS % Recovery	SOIL LIMITS % Recovery
Pesticide/PCB's		
Lindane	56-123	46-127
Heptachlor	40-131	35-130
Aldrin	40-120	34-132
Dieldrin	52-126	31-134
Endrin	56-121	42-139
4,4'-DDT	38-127	23-134

5. Duplicate (Spike Duplicate) Analysis - Duplicates are used to assess the degree of analytical precision, or the ability of the laboratory to repeat the process with consistent performance. Duplicates are run once per batch and in no case at a frequency less than 5% (1 in 20). Duplicate precision is measured in terms of Relative Percent Difference (RPD) between the two measures of the same parameter run in the same batch. Acceptance criteria must be at least as stringent as the method specifications. Typical RPD's are as follows:

PARAMETER	WATER RPD	SOIL RPD
Volatiles	10-15%	20-25%
Semivolatiles	25-50%	20-50%
Pesticides/PCB's	15-30%	30-50%
Metals	20%	20%
Classical Chemistry	25%	25%

6. Laboratory Control Samples (LCS) - An LCS is a sample which has been previously determined to have known amounts of analytes in it. Laboratory control samples provide another

measure of analytical accuracy. By comparing the results of an LCS analysis with the known values established for the LCS, accuracy can be assessed. The normal acceptance criteria for LCS analysis is +/- 20%.

7. Other - Other types of routine analytical quality control checks include:

A. ICP serial dilution analysis
B. Standard addition analysis
C. Interelement corrections checks
D. Linear range analysis

9.3 Non-Routine Quality Control Checks

Non-routine quality control checks are addressed in detail in section 10, Performance and System Audits.

10. PERFORMANCE AND SYSTEM AUDITS

The Quality Assurance Officer of CTM is responsible for performance and system audits. A performance audit is intended to provide a measure of the quality of data generated. This normally involves the introduction of blind performance evaluation samples into the laboratory. A systems audit is intended to provide a review of the overall capability of the laboratory to meet its stated quality assurance objectives. This entails review of the facilities, personnel, equipment and documentation. These audits are of two types; internal and external.

10.1 Internal Audit Programs

The Quality Assurance Officer will randomly cause duplicates of field samples to be introduced to the laboratory in such a fashion as to be unknown to the laboratory staff. The results of these analyses are then reviewed by the Quality Assurance Officer and reported to the Laboratory Director. Any deficiencies noted are required to be investigated by the responsible Group Supervisor. The Group Supervisor is required to report back to the Quality Assurance Officer and the Laboratory Director regarding the cause of the problem and the corrective action employed to correct the deficiency.

The Quality Assurance Officer is also responsible for conducting ongoing systems audits. These entail unannounced reviews of lab notebooks, equipment maintenence and

calibration records, training records, and all forms of documentation for any conditions which might have an adverse effect on data quality.

10.2 External Audit Programs

CTM has successfully acquired and maintained certification in five states. These are New York (DOH & DEC), New Jersey (DEC), Connecticut (DHS), Massachusetts (DEP) and Pennyslavania (DER). These states have some of the most rigorous requirements for certification in the nation. The certification process, in each case, includes periodic performance evaluations and on site systems audits.

11.0 PREVENTIVE MAINTENANCE

In order to ensure the optimum performance of its instrumentation, CTM has a regular program of preventive maintenance. This is an in-house capability and does not rely on service contracts which allows CTM to maintain the highest level of up-time and instrument performance.

The laboratory keeps a $10,000 inventory of spare parts and expendable materials to be used in the instrument maintenance and repair program.

All instument repair, modification or service is documented in the instrument log book.

12.0 DATA ASSESSMENT PROCEDURES

As stated in section 1.0, it is the policy of CTM to produce data of known quality. In order to accomplish this objective on a routine basis, it is necessary to constantly review and assess the quality of data generated in the laboratory.

Data quality is measured in terms of precision, accuracy, completeness, representativeness and comparability. These

15.0 METHOD DETECTION LIMITS

MDL's will be calculated at least annually (quarterly for most methods) for analyses requiring instruments. The reference for the MDL procedure is 40 CFR Appendix B Part 136. The following components will be included for MDL calculations:

A. Concentration of the standard(s) used. (1 to 5 times estimated MDL)
B. Date(s) samples were run
C. Actual value determined for each of the 7-10 samples run.
D. Standard deviation calculated.
E. MDL calculated.

16.0 ARCHIVAL PROCEDURES

After an EPA CLP or NYDEC ASP package is delivered, the process for archival of tapes is started. All raw and processed GC/MS data including samples, blanks, initial calibrations, continuing calibrations, BFB and DFTPP, spectral libraries and quantization reports are referenced, per project, in a tape file. The Systems Manager produces a magnetic tape which is stored under lock and key for security of documentation. These tapes are stored for a minimum of 7 years after data submission.

CTM also retains a copy of the Sample Data Package for a minimum of 7 years after data submission.

TABLE 1

CALIBRATION

Volatile Organics

Method number: EPA 624
Tuning Compound: BFB
Calibration Frequency: As required
Points In Curve: 5
Continuing Calibraton: Daily
Acceptance Criteria Init. Cal.: Less than or equal to 30% RSD for CCC compounds only
Acceptance Criteria Cont. Cal.: Less than or equal to 25% PD for CCC compounds only
Notes: Reagent blanks once per batch, minimum RRF for SPCC's is 0.300 (0.250 for bromoform)

Method number: EPA 8240
Tuning Compound: BFB
Calibration Frequency: As required
Points in Curve: 5
Continuing Calibration: 12 hours
Acceptance Criteria Init. Cal.: Less than or equal to 30% RSD for CCC compounds only
Acceptance Criteria Cont. Cal.: Less than or equal to 25% PD for CCC compounds only
Notes: Reagent blanks once per batch, minimum RRF for SPCC's is 0.300 (0.250 for bromoform)
A separate curve is performed for soils

Method number: CLP/NYSDEC ASP 91-1
Tuning Compound: BFB
Calibration Frequency: As required
Points in curve: 5
Continuing Calibration: 12 hours
Acceptance Criteria Init. Cal.: Refer to Table 5 Exhibit 49 NYSDEC ASP '91
Acceptance Criteria Cont. Cal.: Refer to Table 5 Exhibit 49 NYSDEC ASP '91
Notes: Reagent blanks once per batch, minimum RRF (Table 5 Exhibit 49 NYSDEC ASP '91)
A separate curve is performed for soils

Method number: EPA 503/602
Tuning compound: N/A
Calibration Frequency: weekly/daily
Points in curve: 3
Continuing Calibration: Daily
Acceptance Criteria Init. Cal.: Less than or equal to 20% RSD
Acceptance Criteria Cont. Cal.: Less than or equal to 20% PD
Notes: Reagent blanks once per batch

CCC Compounds - Calibration Check Compounds

Volatile Organics continued...

Method Number: EPA 524.2
Tuning Compound: BFB
Calibration Frequency: As required
Points in Curve: 3 - 5 (depends on calibration range)
Continuing Calibration: 8 hours
Acceptance Criteria Init. Cal.: Less than or equal to 20% RSD
Acceptance Criteria Cont. Cal.: Less than or equal to 30% PD
Notes: Reagent blanks once per batch

TABLE 1

CALIBRATION

Pesticides/ PCB's

Method Number: **EPA 608**
Tuning Compound: N/A
Calibration Frequency: As required
Points in Curve: 3 - 4
Continuing Calibration: 24 hours
Acceptance Criteria Init. Cal.: Corr. coef. 0.995 or greater
Acceptance Criteria Cont. CAl.: Plus or minus 15%
Notes: Reagent blanks once per batch, degradation for DDT, Endrin less than or equal to 20%

Method Number: **EPA 8080**
Tuning Compound: N/A
Calibration Frequency: As required
Points in Curve: 3 - 4
Continuing Calibration: 24 hours
Acceptance Criteria Init. Cal.: Corr. coef. 0.995 or greater
Acceptance Criteria Cont. Cal.: plus or minus 15%
Notes: Reagent blanks once per batch, degradation for DDT, Endrin less than or equal to 20%

Method Number: **CLP/NYSDEC ASP 91-3**
Tuning Compound: N/A
Calibration Frequency: As required
Points in Curve: 3
Continuing Calibration: 12 hours
Acceptance Criteria Init. Cal.: % RSD < 20%
Acceptance Criteria Cont. Cal.: Plus or minus 15%
Notes: Reagent blanks once per batch, degradation for DDT, Endrin less than or equal to 20%

Method Number: **EPA 8140**
Tuning Compound: N/A
Calibration Frequency: As required
Points in Curve: 3
Continuing Calibration: 24 hours
Acceptance Criteria Init. Cal.: Corr. coef. 0.995 or greater
Acceptance Criteria Cont. Cal.: Plus or minus 15%
Notes: Reagent blanks once per batch

Pesticides/PCB's continued..

Method Number: **EPA 8150**
Tuning Compound N/A
Calibration Frequency: As required
Points in Curve: 3
Continuing Calibration: 24 hours
Acceptance Criteria Init. Cal.: Corr. coef. 0.995 or greater
Acceptance Criteria Cont. Cal.: Plus or minus 15%
Notes: Reagent blanks once per batch

TABLE 1

CALIBRATION

Classical Chemistry

Spectrophotometer/IR

Method Number: Various
Tuning Compound: N/A
Calibration Frequency: Daily
Points in Curve: blank plus 4
Continuing Calibration: 10 samples
Acceptance Criteria Init. Cal.: Corr. coef. 0.997 or greater
Acceptance Criteria Cont. Cal.: Plus or minus 10%

Autoanalyzer

Method Number: Various
Tuning Compound: N/A
Calibration Frequency: Daily
Points in Curve: blank plus 4
Continuing Calibration: 10 samples
Acceptance Criteria Init. Cal.: Corr.coef. 0.997 or greater
Acceptance Criteria Cont. Cal.: Plus or minus 10%

TOC Analyzer

Method Number: Various
Tuning Compound: N/A
Calibration Frequency: Daily
Points in Curve: blank plus 4
Continuing Calibration: 10 samples
Acceptance Criteria Init. Cal.: Corr. coef. 0.997 or greater
Acceptance Criteria Cont. Cal.: Plus or minus 10%

Balances

Check daily against class "S" metric weight at high and low levels; adjust as necessary

Thermometers

Check annually against NBS standard; replace as required

Refrigerators/Incubators/Ovens/Baths

Check twice per day; adjust as required

pH Meters

Calibrate daily using certified pH 7 buffer; record values

for pH 4 and pH 10 buffers

Classical Chemistry continued..

Autopipets

Check semi-annually by gravimetric measurement

Conductivity Meter

Annually calibrate with a blank and 5 standard concentrations of KCL

TABLE 1

CALIBRATION

Metals, AA

Method Number: EPA 200's
Tuning Compound: N/A
Calibration Frequency: Each run
Points in Curve: Blank plus 4
Continuing Calibration: 10 samples
Acceptance Criteria Init. Cal.: Corr. coef. 0.995 or greater
Acceptance Criteria Cont. Cal.: Plus or minus 10%
Notes: Control limits for mercury calibration are 80 - 120%
Reagent blanks once per batch

Method Number: EPA 7000's
Tuning Compound: N/A
Calibration Frequency: Each run
Points in Curve: Blank plus 4
Continuing Calibration: 10 samples
Acceptance Criteria Init. Cal.: Corr. coef. 0.995 or greater
Acceptance Criteria Cont. Cal.: Plus or minus 10%
Notes: Control limits for mercury calibration are 80 - 120%
Reagent blanks once per batch

Method Number: CLP/NYSDEC ASP '91
Tuning Compound: N/A
Calibration Frequency: Each run
Points in Curve: Blank plus 4
Continuing Calibration: 10 samples
Acceptance Criteria Init. Cal.: Corr. coef. 0.995 or greater
Acceptance Criteria Cont. Cal.: Plus or minus 10%
Notes: Control limits for mercury calibration are 80 - 120%
Reagent blanks once per batch

TABLE 1

CALIBRATION

Metals, ICP

Method Number: EPA 200.7
Tuning Compound: N/A
Calibration Frequency: Each run
Points in Curve: 2
Continuing Calibration: 10 samples
Acceptance Criteria Init. Cal.: Corr. coef. .9999 or greater
Acceptance Criteria Cont. Cal.: Plus or minus 10%
Notes: Reagent blanks once per batch

Method Number: EPA 6010
Tuning Compound: N/A
Calibration Frequency: Each run
Points in Curve: 2
Continuing Calibration: 10 samples
Acceptance Criteria Init. Cal.: Corr. coef. .9999 or greater
Acceptance Criteria Cont. Cal.: Plus or minus 10%
Notes: Reagent blanks once per batch

Method Number: CLP/NYSDEC ASP '91
Tuning Compound: N/A
Calibration Frequency: Each run
Points in Curve: 2
Continuing Calibration: 10 samples
Acceptance Criteria Init. Cal.: Corr. coef. .9999 or greater
Acceptance Criteria Cont. Cal.: Plus or minus 10%
Notes: Reagent blanks once for batch

TABLE 2

SUMMARY OF ANALYTICAL METHODS

Volatiles (GC)

Purgable Halocarbons
Wastewater Analysis: EPA 601
Groundwater Analysis: EPA 8010 Prep: EPA 5030
Soils/Sed/Sludge: EPA 8010 Prep: EPA 5030
Solids Waste Analysis: EPA 8020 Prep: EPA 5030

Aromatic Hydrocarbons
Wastewater Analysis: EPA 602
Groundwater Analysis: EPA 8020 Prep: EPA 5030
Drinking Water Analysis: EPA 502
Soils/Sed/Sludge: EPA 8020 Prep: EPA 5030
Solids Waste Analysis: EPA 8020 Prep: EPA 5030
Note: EDB/DBCP by method EPA 504 for drinking water

Direct Inj/Heated Purge & Trap
Groundwater Analysis: EPA 8015

Volatiles (GC/MS)

Volatile Organic Compounds
Wastewater Analysis: EPA 624
Groundwater Analysis: EPA 8240 Prep: EPA 5030
Drinking Water Analysis: EPA 502
Soils/Sed/Sludge: EPA 8240 Prep: EPA 3550
Solids Waste Analysis: EPA 8240 Prep: EPA 5030
Note: USEPA CLP and NYSDEC ASP '91 Protocols may also be used

Semivolatiles (GC/MS)

Acid/Base/Neutral Extractables
Wastewater Analysis: EPA 625
Groundwater Analysis: EPA 8270 Prep: EPA 3510
Soil/Sed/Sludge: EPA 8270 Prep: EPA 3550
Solids Waste Analysis: EPA 8270 Prep: EPA 3550
Note: USEPA CLP and NYSDEC ASP '91 Protocols may also be used

Pesticides/PCB's

Chlorinated Pesticides/Aroclors
Wastewater Analysis: EPA 608
Groundwater Analysis: EPA 8080 Prep: EPA 3510
Drinking Water Analysis: SM509A
Soil/Sed/Sludge: EPA 8080 Prep: EPA 3550
Solids Waste Analysis: EPA 8080 Prep: EPA 3550
Note: USEPA CLP and NYSDEC ASP '91 Protocols may also be used

TABLE 2

SUMMARY OF ANALYTICAL METHODS

Herbicides

Chlorinated Acid Herbicides
Groundwater Analysis: EPA 8150
Drinking Water Analysis: SM509B
Soils/Sed/Sludge: EPA 8150
Solids Waste Analysis: EPA 8150
Notes: Preparation method included in analytical method

NP Pesticides

Nitrogen/Phosphorus Pesticides

Groundwater Analysis: EPA 8140	Prep: EPA 3510
Soils/Sed/Sludge: EPA 8140	Prep: EPA 3550
Solids Waste Analysis: EPA 8140	Prep: EPA 3550

Metals (ICP)

All Metals

Wastewater Analysis: EPA 200.7	
Groundwater Analysis: EPA 6010	Prep: EPA 3010
Drinking Water Analysis: EPA 200.7	
Soils/Sed/Sludge Analysis: EPA 6010	Prep: EPA 3010
Solids Waste Analysis: EPA 6010	Prep: EPA 3010

Notes: Flame AA methods may be used as a substitute
USEPA CLP and NYSDEC ASP '91 Protocols may also be used

Metals (GFAA)

Arsenic

Wastewater Analysis: EPA 206.2	
Groundwater Analysis: EPA 7060	Prep: EPA 3005
Drinking Water Analysis: EPA 206.2	
Soils/Sed/Sludge: EPA 7060	Prep: EPA 3050
Solids Waste Analysis EPA 7060	Prep: EPA 3050

Notes:USEPA CLP and NYSDEC ASP '91 Protocols may also be used

Lead

Wastewater Analysis: EPA 239.2	
Groundwater Analysis: EPA 7421	Prep: EPA 3005
Drinking Water Analysis: EPA 239.2	
Soils/Sed/Sludge: EPA 7421	Prep: EPA 3050
Solids Waste Analysis: EPA 7421	Prep: EPA 3050

Notes:USEPA CLP and NYSDEC ASP '91 Protocols may also be used

TABLE 2

SUMMARY OF ANALYTICAL METHODS

Selenium
Wastewater Analysis: EPA 270.2
Groundwater Analysis: EPA 7740 Prep: EPA 3005
Drinking Water Analysis: EPA 270.2
Soils/Sed/Sludge: EPA 7740 Prep: EPA 3050
Solids Waste Analysis: EPA 7740 Prep: EPA 3050
Notes:USEPA CLP and NYSDEC ASP '91 Protocols may also be used

Thallium
Wastewater Analysis: EPA 279.2
Groundwater Analysis: EPA 7841 Prep: EPA 3005
Drinking Water Analysis: EPA 279.2
Soils/Sed/Sludge: EPA 7841 Prep: EPA 3050
Solids Waste Analysis: EPA 7841 Prep: EPA 3050
Notes:USEPA CLP and NYSDEC ASP '91 Protocols may also be used

Metals (AA)

Molybdenum
Wastewater Analysis: EPA 246.1
Groundwater Analysis: EPA 7480 Prep: EPA 3005
Drinking Water Analysis: EPA 246.1
Soils/Sed/Soils: EPA 7480 Prep: EPA 3050
Solids Waste Analysis: EPA 7480 Prep: EPA 3050
Notes:USEPA CLP and NYSDEC ASP '91 Protocols may also be used

Potassium
Wastewater Analysis: EPA 258.1
Groundwater Analysis: EPA 7610 Prep: EPA 3005
Drinking Water Analysis: EPA 258.1
Soils/Sed/Sludge: EPA 7610 Prep: EPA 3050
Solids Waste Analysis: EPA 7610 Prep: EPA 3050
Notes:USEPA CLP and NYSDEC ASP '91 Protocols may also be used

Sodium
Wastewater Analysis: EPA 273.1
Groundwater Analysis: EPA 7770 Prep: EPA 3005
Drinking Water Analysis: EPA 273.1
Soils/Sed/Sludge: EPA 7770 Prep: EPA 3050
Solids Waste Analysis: EPA 7770 Prep: EPA 3050
Notes:USEPA CLP and NYSDEC ASP '91 Protocols may also be used

TABLE 2

SUMMARY OF ANALYTICAL METHODS

Titanium
Wastewater Analysis: EPA 283.1
Drinking Water Analysis: EPA 283.1
Notes:USEPA CLP and NYSDEC ASP '91 Protocols may also be used

Metals (CV)

Mercury
Wastewater Analysis: EPA 245.2
Groundwater Analysis: EPA 7470
Drinking Water Analysis: EPA 245.2
Soils/Sed/Sludge Analysis: EPA 7470
Solid Waste Analysis: EPA 7470
Notes: Preparation method included in analytical method
USEPA CLP and NYSDEC ASP '91 Protocols may also be used

Classical Chemistry

Parameter	Waters	Solids
%Ash		ASTM D482
Alkalinity	EPA 310.2	
Ammonia	EPA 350.1	
BOD	EPA 405.1	
BTU		ASTM D240-80
Dissolved Oxygen	EPA 360.1	
Chloride	EPA 325.2	
Chloride, Residual	EPA 330.5	
% Chlorine	ASTM D808-63	
Color	EPA 110.2	
Conductivity	EPA 120.1	
COD	EPA 410.2	
Corrosivity	40 CFR 261.22	40 CFR 261.22
Cyanide, Total	EPA 335.2	SW846 9010A
Cyanide, Amenable	EPA 335.3	SW846 9010A
Cyanide, Reactive		SW846 7.3.3.2
Ethylene Glycol	NYS DOH APC-44	
Fluoride	EPA 340.2	
Formaldehyde	NIOSH	
Hardness	EPA 130.2	
Ignitibility	EPA 1010	EPA 1010
MBAS	EPA 425.1	
Nitrate	EPA 353.2	
Nitrite	EPA 354.1	
Odor	EPA 140.1	

TABLE 2

SUMMARY OF ANALYTICAL METHODS

Classical Chemistry

Parameter	Waters	Solids
Oil and Grease	EPA 413.1	EPA 413.1
pH	EPA 150.1	SW846 9045
Total Pet. Hydro.	EPA 418.1	EPA 418.1
Phenol, Total	EPA 420.2	
Phosphate Total	EPA 365.1	
Phosphate, Ortho	EPA 365.2	
Solids, Dissolved	EPA 160.1	
Solids, Suspended	EPA 160.2	
Solids, Total	EPA 160.3	
Solids, Volatile	EPA 160.4	
Solids, Settable	EPA 160.5	
Sulfate	EPA 375.2	
Sulfide	EPA 376.2	
Sulfide, Reactive		SW846 7.3.3.2
Sulfite	EPA 377.1	
TKN	EPA 351.3	
Total Organic Carbon	EPA 415.1	
Turbidity	EPA 180.1	
% Sulfur		ASTM D2622
% Total Solids		CLP SOW 4/89

TABLE 3

LABORATORY PRACTICAL QUANTITATION LIMITS FOR

ORGANICS

PARAMETER	METHOD	WATER (ppb) P.Q.L.	SOLIDS (mcg/kg) P.Q.L.
Volatiles	EPA 601	1 - 5	XXX
	EPA 602	1	XXX
	EPA 503	1 - 5	XXX
	EPA 8010	1	1 - 5
	EPA 8015	100 - 10,000	XXX
	EPA 8020	1 - 5	1 - 5
	EPA 624	5 - 10	XXX
	EPA 8240	5 - 10	5 - 10
	CLP	5 - 10	5 - 10
	EPA 502	.5	.5
Semivolatiles	EPA 625	5 - 50	XXX
	EPA 8270	10 - 50	600 - 3300
Pesticides/PCB's	EPA 608	0.05 - 1	XXX
	EPA 8080	0.05 - 1	10 - 200
	EPA 8140	1.0 - 10	30 - 400
	EPA 8150	0.5	10
	SM 15th Ed. 509A	0.05 - 1	XXX
	SM 15th Ed. 509B	0.5	XXX

Please note: Practical Quantitation Limits are highly matrix dependent. These Table 3 listings are for reference only. The detection limit given is for the majority of compounds on a given analyte list. Individual compounds may vary by as much as an order of magnitude. Please contact the Laboratory for specific limits.

TABLE 3

LABORATORY PRACTICAL QUANTITATION LIMITS
FOR

METALS

PARAMETER	METHOD	WATER (ppm) P.Q.L.	SOLIDS (mg/kg) P.Q.L
Aluminum	EPA 200.7	0.200	20.0
Antimony	EPA 200.7	0.060	6.0
Arsenic	EPA 206.2	0.004	0.4
Barium	EPA 200.7	0.050	5.0
Beryllium	EPA 200.7	0.005	0.5
Boron	EPA 200.7	0.500	50.0
Cadmium	EPA 200.7	0.005	5.0
Calcium	EPA 200.7	0.500	50.0
Chromium	EPA 200.7	0.010	1.0
Chromium +6	EPA 218.5	0.010	1.0
Cobalt	EPA 200.7	0.050	5.0
Copper	EPA 200.7	0.050	5.0
Iron	EPA 200.7	0.100	10.0
Lead	EPA 239.2	0.004	0.4
Magnesium	EPA 200.7	0.500	50.0
Manganese	EPA 200.7	0.010	1.0
Mercury	EPA 245.2	0.0002	0.1
Molybdenum	EPA 246.1	0.2	20.0
Nickel	EPA 200.7	0.030	3.0
Potassium	EPA 258.1	0.20	20.0
Selenium	EPA 270.2	0.005	0.5
Silver	EPA 200.7	0.010	1.0
Sodium	EPA 273.1	0.20	20.0
Thallium	EPA 279.2	0.004	0.4
Titanium	EPA 283.1	0.2	20.0
Vanadium	EPA 200.7	0.050	5.0
Zinc	EPA 200.7	0.020	2.0

TABLE 3

LABORATORY PRACTICAL QUANTITATION LIMITS
FOR

CLASSICAL CHEMISTRY

PARAMETER	METHOD	WATER (ppm) P.Q.L
Alkalinity	EPA 310.2	2
Ammonia	EPA 350.1	0.1
BOD	EPA 405.1	1
Dissolved Oxygen	EPA 360.1	1
Chloride	EPA 325.2	2
Chloride, Residual	EPA 330.5	0.02
% Chlorine	ASTM D808-63	0.02%
Color	EPA 110.2	5 CPU
Conductivity	EPA 120.1	10 UMHOS/CM
COD	EPA 410.2	10
Corrosivity	40 CFR 261.22	<2 or >12
Cyanide, Total	EPA 335.2	0.01
Cyanide, Amenable	EPA 335.3	0.01
Ethylene Glycol	NYS DOH APC-44	0.05
Fluoride	EPA 340.2	0.2
Formaldehyde	NIOSH	0.05
Hardness	EPA 130.2	4
Ignitability	EPA 1010	70° F
MBAS	EPA 425.1	0.02
Nitrate	EPA 353.2	0.2
Nitrite	EPA 354.1	0.01
Odor	EPA 140.1	no odor detected
Oil and Grease	EPA 413.1	1
Total Pet. Hydro.	EPA 418.1	1
Phenol, Total	EPA 420.2	0.05
Phosphate, Total	EPA 365.1	0.1
Phosphate, Ortho	EPA 365.2	0.1
Solids, Dissolved	EPA 160.1	10
Solids, Suspended	EPA 160.2	4
Solids, Total	EPA 160.3	10
Solids, Volatile	EPA 160.4	10
Solids, Settable	EPA 160.5	0.2/hr
Sulfate	EPA 375.2	5
Sulfide	EPA 376.2	0.1
Sulfite	EPA 377.1	1
TKN	EPA 351.3	0.2
Total Organic Carbon	EPA 415.1	1
Turbidity	EPA 180.1	1 NTU

TABLE 3

LABORATORY PRACTICAL QUANTITATION LIMITS FOR

CLASSICAL CHEMISTRY

PARAMETER	METHOD	SOLID (mg/kg)* P.Q.L.
% Ash	ASTM D 482	0.04%
BTU	ASTM D240-80	100 BTU/LB
Corrosivity	40 CFR 261.22	<2 or >12
Cyanide, Total	SW846 9010A	1
Cyanide, Amenable	SW846 9010A	1
Cyanide, Reactive	SW 846 7.3.3.2	100
Ignitability	EPA 1010	70° F
Oil and Grease	EPA 413.1	50
Total Pet. Hydro.	EPA 418.1	50
Sulfide, Reactive	SW 846 7.3.4.2	100
% Sulfur	ASTM D2622	0.1%
% Total Solids	CLP SOW 4/89	1%

* based on 100% total solids

Table 4

Laboratory Instrumentation and Equipment

2 HP 5890A Gas Chromatograph with dual Electron Capture detectors, 7673A Autosampler, 100 sample tray, 3396A and and 3392A integrators.

1 HP 5890A Gas Chromatograph with Flame Ionization, Nitrogen-Phosphorus detectors, 7673 Autosampler, 100 sample tray and 3393A Integrator.

1 HP 5880A Gas Chromatograph with dual Electron Capture detectors, 7673A Autosampler, 100 sample tray and level IV terminal.

1 HP 5880A with Flame Ionization, Thermal Conductivity and Photoionization detectors, 7672A Autosampler with 100 sample capacity and level IV terminal.

1 HP 5890A Gas Chromatograph, 5970B Quadrapole Mass Spectrometer with 7673A Autosampler and 100 sample tray.

1 HP 5890A Gas Chromatograph, 5971A Quadrapole Mass Spectrometer with 7673A Autosampler and 100 sample tray.

1 Waters Liquid CHromatograph with WISP 50 sample Autosample, Model 510 solvent pump, UV and conductivity detectors and a Model 740 Integrator.

2 HP 5890A Gas Chromatographs, Tekmar LSC-2000 Purge & Trap ALS-2050 50 sample Autosamplers, M-1000 Cryo-focusing modules, OI Electrolytic Conductivity detectors, HNU Photo-ionization detector and a HP 3392A Integrators.

1 Varian 3300 Gas Chromatograph , Tekmar LSC-2000, ALS-2016 16 chamber Soil/Water Autosampler, M-1000 Cryo-Focusing module, OI Photoionization/Electrolytic Conductivity detector and a HP 3392A Integrator.

2 HP 5890A Gas Chromatographs, 5970B Quadrapole Mass Spectrometers, Tekmar LSC-200 Purge & Trap, ALS-2016 16 sample Water/Soil Autosamplers and M-1000 Cryo-Focusing modules.

1 HP 5890A Gas Chromatograph, 5971A Quadrapole Mass Spectrometers, Tekmar LSC-2000 Purge & Trap ALS-2050 50 sample Water Autosamplers and M-1000 Cryo-Focusing modules.

Laboratory Instrumentation and Equipment
(Continued)

1 HP 1000A Mini Computer with 560 Megabyte Disc Drive, HP LAS/LOOP data acquisition system with two data channels per GC system, 1600 Bpi Magnetic Tape data archive unit, and associated terminals and printer for automatic report generation.

1 HP 1000A Mini Computer with two 560 Megabyte Disc Drives, HP/Aquarius Mass Spectrometer Control and Data Acquistion software, 1600 Bpi Magnetic Tape data archive and associated terminals and printers.

2 HP 486S/20 MS DOS personal computers with MS Windows compatable Mass Spec. Chemstation software including Enviroquant target compound software, Mustang II CLP forms generation software, and the NIST Mass Spectral library.

1 ABC Autovap 600

1 ABC UVD-1 Flow thru UV Detector

1 ABC Sample Input Module

1 Hewlett-Packard 3392A Integrator

2 700mm x 25mm glass columns

1 JY-32 26 element simultaneous ICP Spectrometer with fully automated CLP computer system.

1 PE 1100B Atomic Absorption Spectrophotometer with HGA 700 Furnace and AS 60/70 Autosampler.

1 IL 951 Atomic Absorption Spectrophotometer (Simultaneous two element analysis with background correction and real time video display). Equipped with IL 440 Atomic Vapor Accessory (Automated accessory for cold vapor and hydride analses).

1 PE Zeeman 5100 Atomic Absorption Spectrophotometer with HGA 600 Furnace and AS 60/70 Autosampler.

1 Leeman Labs, Inc PS200 Automated Mercury Analyzer with Hyundai Super 286E Plus computer and Okidata Microline 320 printer.

8 Corning (3920-MBO) Heavier than Water Extractor Bodies

8 Corning (3840-MCO) Alihn Condensers

Laboratory Instrumentation and Equipment
(Continued)

8 Corning (4320-1000) 1 liter Round Bottom Flasks

8 Glascol Heating Mantles (1L)

8 Glascol Power Controllers

8 Corning (3940-M) Drying Adapters

1 Technicon TrAAcs - 800 Dual Channel Analyzer with Random Access 120 Sample Autosampler.

1 Beckman 915B Total Organic Carbon Analyzer (equipped with both organic and inorganic carbon channels)

1 Buck Scientific Oil-in-Water Analyzer Model HC-404

1 Bausch & Lomb Spectronic 1001 Spectrophotometer

1 Hach 2100 Turbidometer

1 Mettler AE 163 Digital Electronic Balance

1 Fisher XL-500 Digital Pan Balance

1 Mettler BB300 Pan Balance

1 Altex 500 Digital pH meter

1 Beckman 32 pH meter

1 Tekmar Sonic Disrupter Model SDS 500

1 Ultra Turrax High Speed Homogenizer

1 ABC Automated GPC with Autovap 600

1 Branson 8200 Bath Sonicator

1 YSI 54 Oxygen Meter

1 YSI 33 Conductivity Meter

1 Orion Model 97-08-00 Oxygen Electrode

1 Fisher/Tag Pensky Martens Type Closed Cup Flash Tester

1 Parr Oxygen Bomb Calorimeter

1 Karl Fischer Type Aquametry Appartus

Laboratory Instrumentation and Equipment (Continued)

1 Analytical Testing TCLP Extractor

1 Millipore Zero Headspace Extractor

1 Analytical Testing Zero Headspace Extractor

2 Millipore RCRA Filter, YT30 142 HW

1 LABCONCO Flask Scrubber Steam Washer

1 LABCONCO Steam Scrubber Washer

1 Fisher 8' Explosion-Proof Exhaust Hood

1 IEC Centra-7 Centrifuge

1 Buchi RE121 Rotovapor with Buchi 461 Water Bath

1 Milli-Q Reagent Grade Water System

1 GLAS-COL Automated Separatory Funnel Shaker

1 LABLINE Model 1278 Multi-Magnestir

1 LABLINE Imperial III Oven

1 Thelco Model 18 Oven

1 Precision Model 26 Oven

1 Blue M Lab Heat Muffle Furnace

1 Precision Concentric Ring Steam Bath

1 Precision Model 2 Incubator

1 Blue M Constant Temperature Bath

1 Corning MP6A Megapure Water System

1 Market Forge Sterimatic Autoclave

1 CEM MDS 81D Microwave Digestor

1 LABLINE Model 3555 BOD Incubator

2 Precision Model 457-01-01 BOD Incubators

Laboratory Instrumentation and Equipment
(Continued)

1 Advance 100ft^2 Walkin Cooler

2 Custom Built Exhaust Hoods 12'

1 Custom Built Exhaust Hood 4'

1 Key Instruments Midi Distillation Apparatus

TABLE 5

CTM Wet Chemistry QC Limits - 7/21/92

Parameter	Control (% Rec)	Spike (% Rec)	RPD (%)
Alkalinity	90.0 - 107	NA	3.9
BOD	63.5 - 134	NA	31
Chloride (Tr)	92.7 - 107	77.6 - 116	10.8
COD (Low)	76.8 - 154	72.6 - 151	32
COD (High)	61.6 - 138	32.8 - 164	22.7
Cyanide (Tr)	84.1 - 109	55.1 - 124	25 *
Ethylene Glycol	77.1 - 122	33.3 - 154	28.1
Fluoride	92.0 - 119	92.8 - 116	6.8
Hardness	83.5 - 115	NA	4.8
Hexachrome	90.8 - 103	86.8 - 126	5.8
MBAS	57.1 - 114	57.8 - 112	14.4
(NH_3) Ammonia	95.6 - 113	65.0 - 131	10.6
Nitrate (Tr)	95.8 - 115	77.1 - 115	3.9
Nitrite	95.5 - 111	63.6 - 122	8.4
Oil and Grease	60.6 - 132	66.3 - 128	25 *
Phenol (Tr)	73.3 - 108	67.7 - 115	18.5
Phosphate (Tr)	82.1 - 119	69.7 - 113	18.1
Sulfate (Tr)	69.4 - 129	84.4 - 116	8.2
Sulfide	72.0 - 126	82.5 - 122	8.1
SST	75.8 - 112	80.4 - 120	21
TOC	89.1 - 114	69.8 - 122	8.2
TPH (418.1)	50.6 - 140	53.7 - 138	30.3
TKN	80.7 - 121	69.8 - 122	20.8
180°C-DS	78.3 - 127	NA	11.0

* Nominal limits - when a sufficient data base is established new limits will be set.

Tr - Traacs

Figure 1

ORGANIZATIONAL CHART

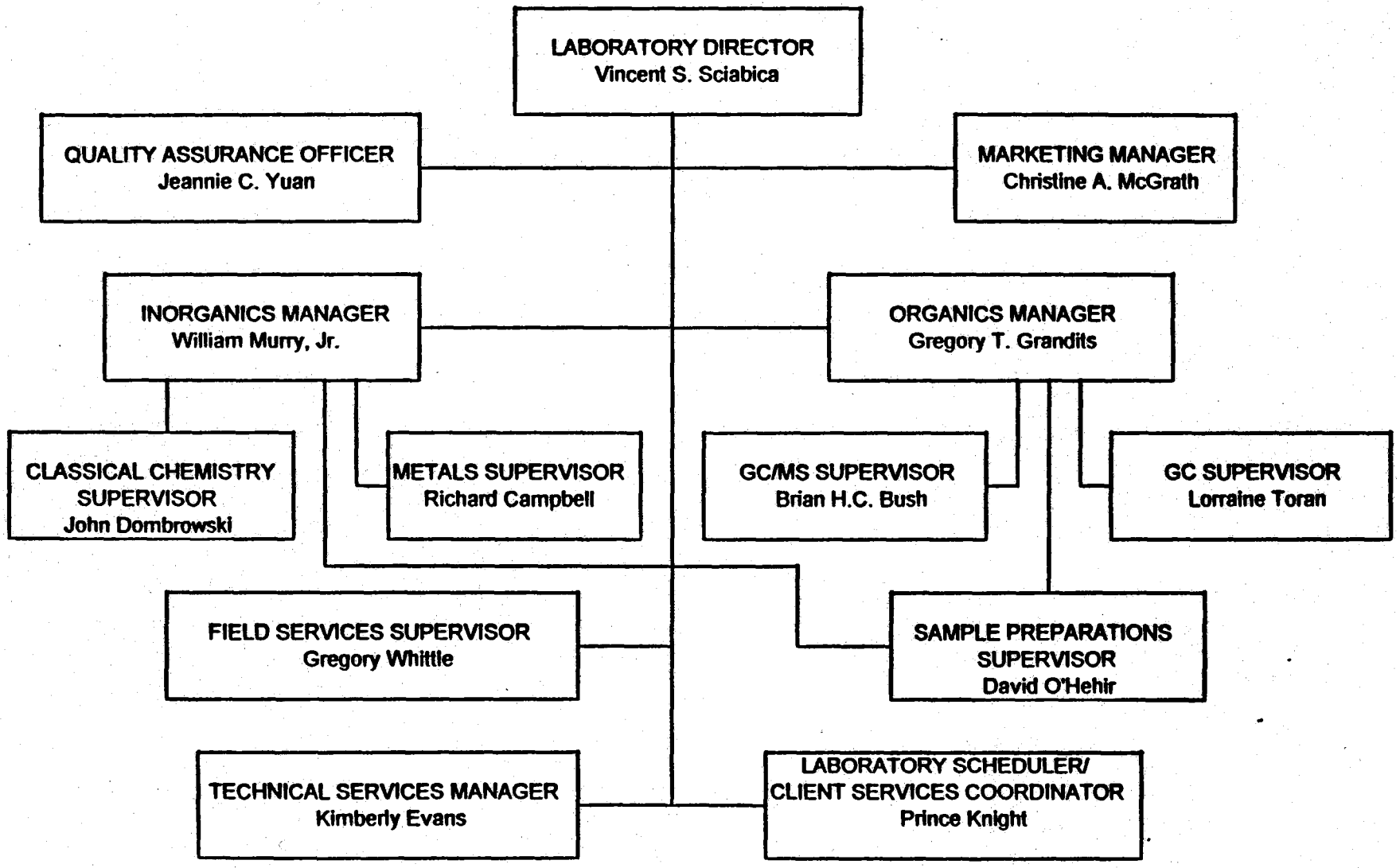

BENZENE SPIKE
12/01/91 - 12/12/91

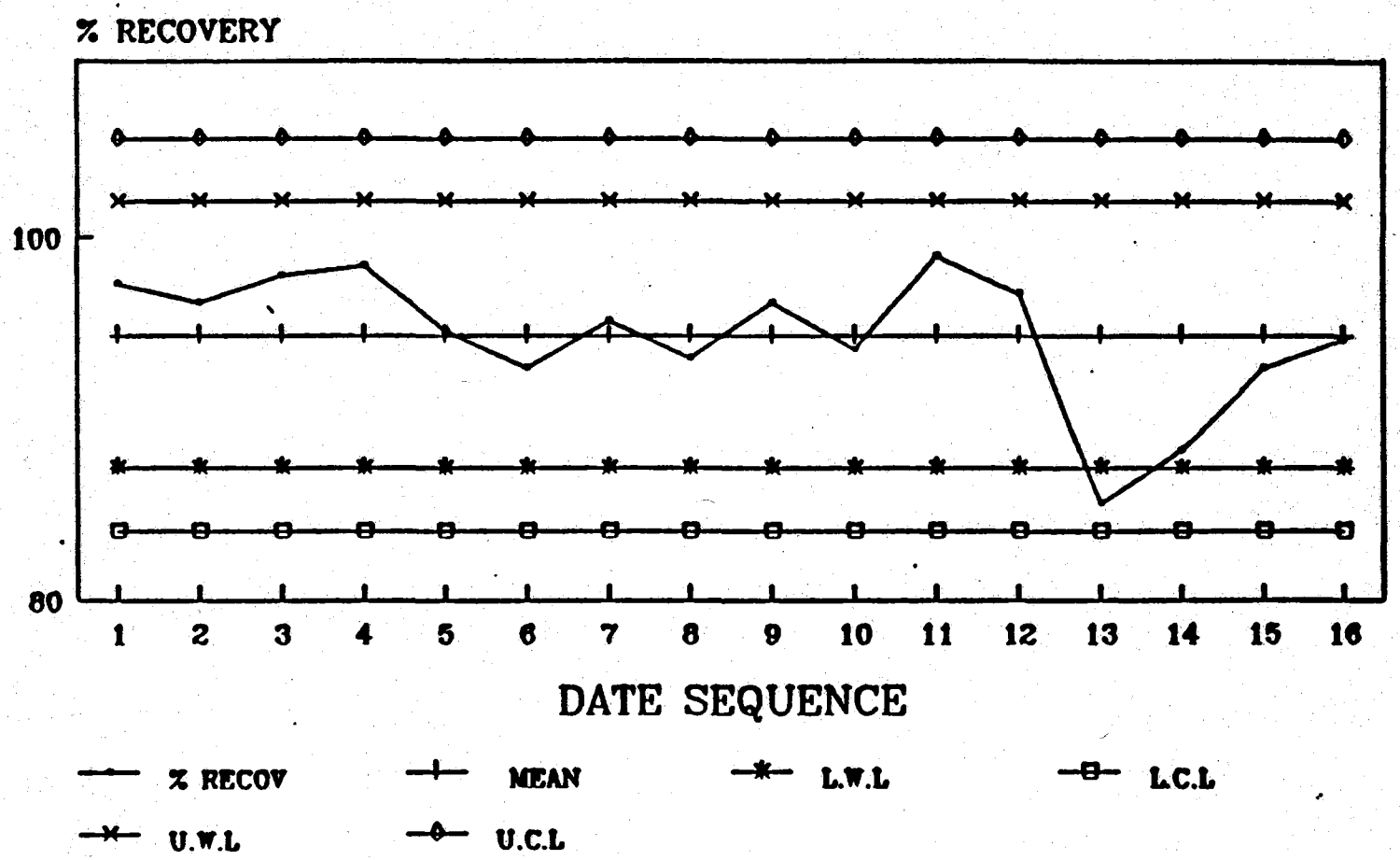

METHOD 503.1

Figure 2

CTM Analytical Laboratories, Ltd.
15 Century Hill Drive
P.O. Box 727
Latham, NY 12110
518-786-7100
FAX 518-786-7139

CHAIN OF CUSTODY RECORD
LABORATORY SERVICES

CTM TASK # _____

Client _____ Sampler's Name _____
Client Contact _____ (please print)
Project Location _____ CTM Contact _____
Purchase Order _____ Turnaround Time Requested _____

CTM LAB ID	Sample ID/Description	Date Sampled	Time A = a.m. P = p.m.	Sample Type: Matrix	Sample Type: COMP	Sample Type: GRAB	# of Containers	Preservative (list by # from list below)	Analysis Required

	Date/Time		Date/Time
Sampled by: (signature)		Received by: (signature)	
Relinquished by: (signature)		Received by: (signature)	
Relinquished by: (signature)		Received by: (signature)	
Dispatched by: (signature)		Received for Laboratory by:	

Preservatives

1. HCl	6. Ascorbic
2. HNO_3	7. H_2SO_4
3. NaOH	8. F (Filtered)
4. NaS_2O_3	9. N (not preserved)
5. Zn Acet	10. Other

Sample Condition

1. Samples intact? Y N
2. Custody seals intact? Y N
3. Preserved properly? Y N
4. Ambient or chilled?
5. C.O.C. received with samples? Y N

NOTES/COMMENTS:

Method of Shipment:

Date:

Figure 3

Report #: _____ CTM ANALYTICAL CHEMISTRY

Client Name: _____ Client Id: _____ CTM Sample No.: _____

Sample Matrix: _____ Date Sampled: _____ No. of Containers: _____

Received for Laboratory by: _____ Condition of Sample: _____

Name - Signature Date Time

Relinquished to Secured Storage Location: _____

Removed from Secure Storage by	Sample Remove Date	Sample Remove Time	Extraction, Digestion or Distillation	Sample Return Date	Sample Return Time	Extract Status	Comments

Figure 4

PB/SR

CTM ANALYTICAL LABORATORIES, 15 CENTURY HILL DRIVE, LATHAM, N.Y. 12110

Figure 5

WINDSOR WORK STATION LIST 10:22:56 04-09-92 PAGE 3

DATE DUE	PJ	SAMPLE	SAMPLE	CLIENT	PROJ. NO.	CLIENT ID	DATE	MATRIX	PARAMETER	METHOD	UNIT	ANALYST
04/09/92	7 DAY	9204028	02		92.03203	CRUSHER RUN STK	04/01/92	SOIL	WHO0S			
04/09/92	7 DAY	9204028	02		92.03203	CRUSHER RUN STK	04/01/92	SOIL	WHO0S			
04/09/92	7 DAY	9204028	02		92.03203	CRUSHER RUN STK	04/01/92	SOIL	WHO0S			
04/09/92	7 DAY	9204028	02		92.03203	CRUSHER RUN STK	04/01/92	SOIL	WHO1S			
04/09/92	7 DAY	9204028	02		92.03203	CRUSHER RUN STK	04/01/92	SOIL	WHO1S			
04/09/92	7 DAY	9204028	02		92.03203	CRUSHER RUN STK	04/01/92	SOIL	WHO1S			
04/09/92	7 DAY	9204028	02		92.03203	CRUSHER RUN STK	04/01/92	SOIL	WHO1S			
04/09/92	7 DAY	9204028	02		92.03203	CRUSHER RUN STK	04/01/92	SOIL	WHO1S			
04/09/92	7 DAY	9204028	02		92.03203	CRUSHER RUN STK	04/01/92	SOIL	WHO1S			
04/09/92	7 DAY	9204028	02		92.03203	CRUSHER RUN STK	04/01/92	SOIL	WHO1S			
04/09/92	7 DAY	9204028	02		92.03203	CRUSHER RUN STK	04/01/92	SOIL	WHO1S			
04/09/92	7 DAY	9204028	02		92.03203	CRUSHER RUN STK	04/01/92	SOIL	WHO1S			
04/09/92	7 DAY	9204028	02		92.03203	CRUSHER RUN STK	04/01/92	SOIL	WHO1S			
04/09/92	7 DAY	9204028	02		92.03203	CRUSHER RUN STK	04/01/92	SOIL	WHO1S			
04/09/92	7 DAY	9204028	02		92.03203	CRUSHER RUN STK	04/01/92	SOIL	WHO2S			
04/09/92	7 DAY	9204028	02		92.03203	CRUSHER RUN STK	04/01/92	SOIL	WHO2S			
04/09/92	7 DAY	9204028	02		92.03203	CRUSHER RUN STK	04/01/92	SOIL	WHO2S			
04/09/92	7 DAY	9204028	02		92.03203	CRUSHER RUN STK	04/01/92	SOIL	WHO2S			
04/09/92	7 DAY	9204028	02		92.03203	CRUSHER RUN STK	04/01/92	SOIL	WHO2S			
04/09/92	7 DAY	9204028	02		92.03203	CRUSHER RUN STK	04/01/92	SOIL	WHO2S			
04/09/92	7 DAY	9204028	02		92.03203	CRUSHER RUN STK	04/01/92	SOIL	WHO2S			
04/09/92	7 DAY	9204028	02		92.03203	CRUSHER RUN STK	04/01/92	SOIL	WHO2S			
04/09/92	7 DAY	9204028	02		92.03203	CRUSHER RUN STK	04/01/92	SOIL	WHO2S			
04/16/92		9204026	01		92.03009	TEST WELL #6	04/01/92	WATER	WH001			
04/16/92		9204026	01		92.03009	TEST WELL #6	04/01/92	WATER	WH002			
04/16/92		9204026	01		92.03009	TEST WELL #6	04/01/92	WATER	WH003			
04/16/92		9204026	01		92.03009	TEST WELL #6	04/01/92	WATER	WH004			
04/16/92		9204026	01		92.03009	TEST WELL #6	04/01/92	WATER	WH005			
04/16/92		9204026	01		92.03009	TEST WELL #6	04/01/92	WATER	WH006			
04/16/92		9204026	01		92.03009	TEST WELL #6	04/01/92	WATER	WH007			
04/16/92		9204026	01		92.03009	TEST WELL #6	04/01/92	WATER	WH008			
04/16/92		9204026	01		92.03009	TEST WELL #6	04/01/92	WATER	WH009			
04/16/92		9204026	01		92.03009	TEST WELL #6	04/01/92	WATER	WH010			
04/16/92		9204026	01		92.03009	TEST WELL #6	04/01/92	WATER	WH011			
04/16/92		9204026	01		92.03009	TEST WELL #6	04/01/92	WATER	WH012			
04/16/92		9204026	01		92.03009	TEST WELL #6	04/01/92	WATER	WH013			
04/16/92		9204026	01		92.03009	TEST WELL #6	04/01/92	WATER	WH014			
04/16/92		9204026	01		92.03009	TEST WELL #6	04/01/92	WATER	WH015			
04/16/92		9204026	01		92.03009	TEST WELL #6	04/01/92	WATER	WH016			
04/16/92		9204026	01		92.03009	TEST WELL #6	04/01/92	WATER	WH017			
04/16/92		9204026	01		92.03009	TEST WELL #6	04/01/92	WATER	WH018			
04/16/92		9204026	01		92.03009	TEST WELL #6	04/01/92	WATER	WH019			
04/16/92		9204026	01		92.03009	TEST WELL #6	04/01/92	WATER	WH020			
04/16/92		9204026	01		92.03009	TEST WELL #6	04/01/92	WATER	WH021			
04/16/92		9204026	01		92.03009	TEST WELL #6	04/01/92	WATER	WH022			
04/16/92		9204026	01		92.03009	TEST WELL #6	04/01/92	WATER	WH023			
04/16/92		9204026	01		92.03009	TEST WELL #6	04/01/92	WATER	WH024			
04/16/92		9204026	01		92.03009	TEST WELL #6	04/01/92	WATER	WH025			
04/16/92		9204026	01		92.03009	TEST WELL #6	04/01/92	WATER	WH026			

FIGURE 6

DATA FLOW DIAGRAM
CTM ANALYTICAL

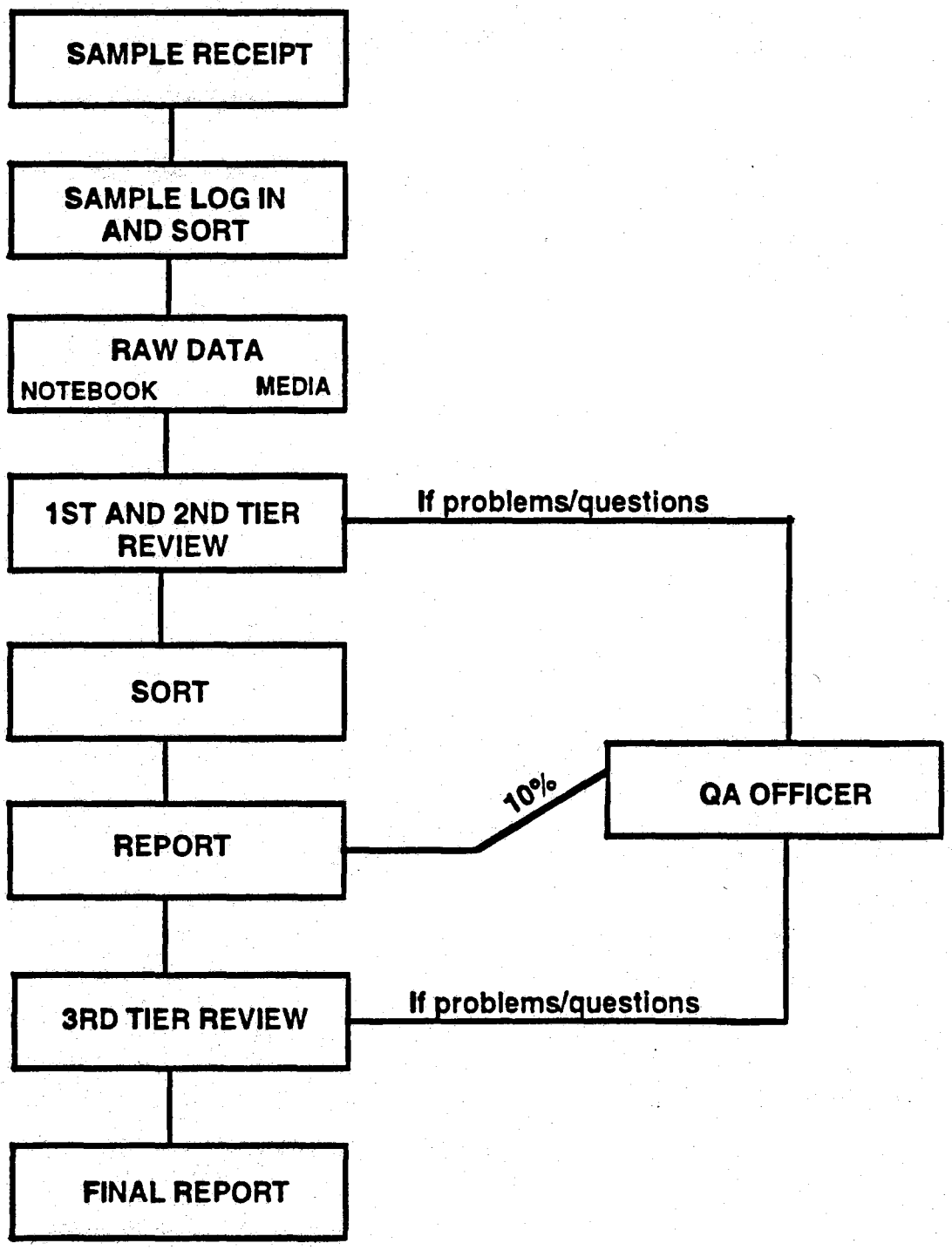

FIGURE 7

NYSDEC ASP
DATA FLOW DIAGRAM

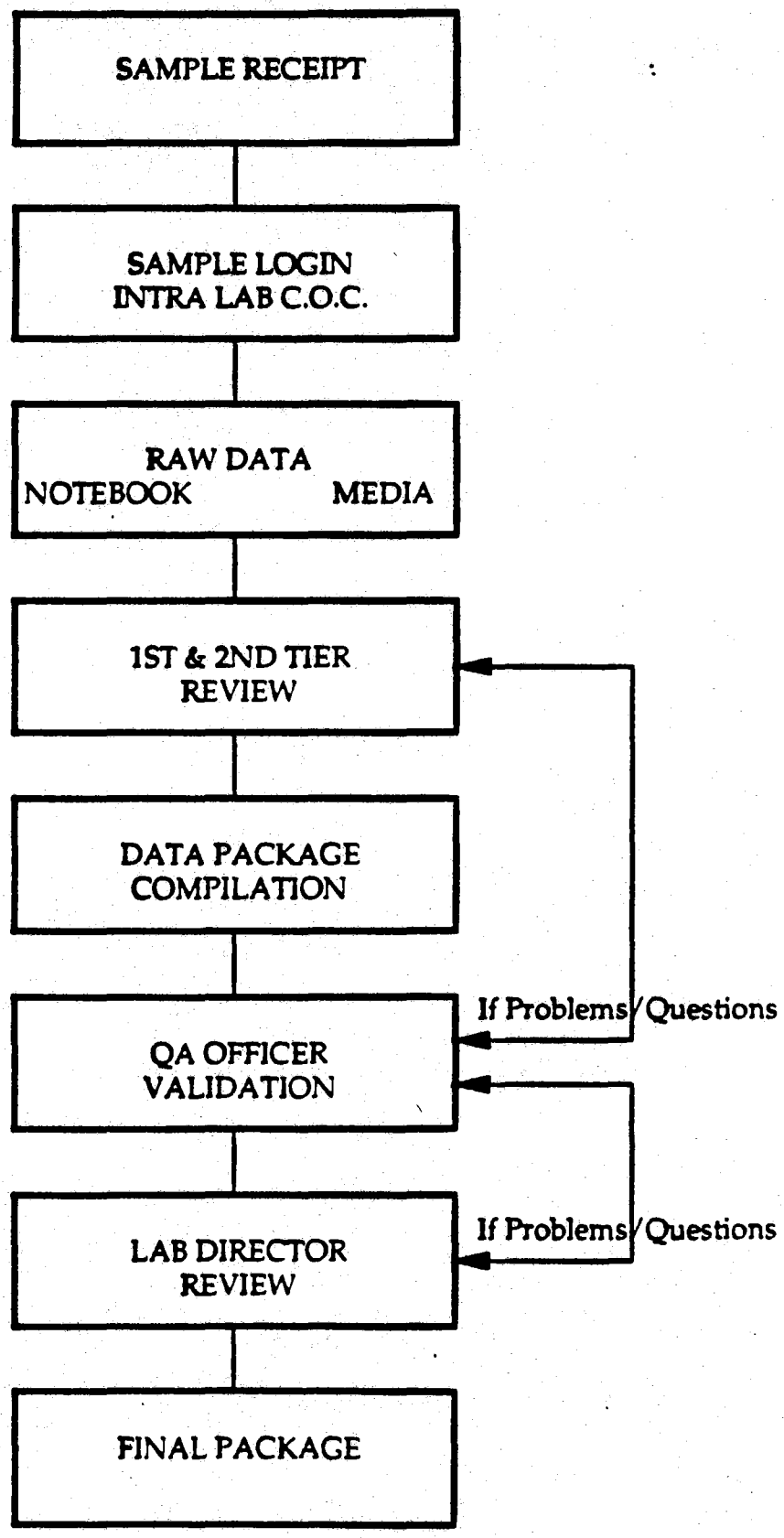

FIGURE 8

CORRECTIVE ACTION REQUEST

NUMBER _____ DATE _____

TO _____

YOU ARE HEREBY REQUESTED TO TAKE CORRECTIVE ACTIONS INDICATED BELOW AND AS OTHERWISE DETERMINED BY YOU (A) TO RESOLVE THE NOTED CONDITION AND (B) TO PREVENT IT FROM RECURRING. YOUR WRITTEN RESPONSE IS TO BE RETURNED TO THE PROJECT QUALITY ASSURANCE MANAGER BY _____

CONDITION

REFERENCE DOCUMENTS

RECOMMENDED CORRECTIVE ACTION

ORIGINATOR	DATE	APPROVAL	DATE	APPROVAL	DATE

RESPONSE

CAUSE OF CONDITION

CORRECTIVE ACTION

(A) RESOLUTION

(B1) PREVENTION

(B2) AFFECTED DOCUMENTS

SIGNITURE _____ DATE _____

Q.A. FOLLOW-UP

CORRECTIVE ACTION VERIFIED: BY _____ DATE _____

VINCENT S. SCIABICA
Laboratory Director and President

Mr. Sciabica is responsible for the operation of CTM Analytical Laboratories which specializes in chemical and physical analyses of environmental samples.

EDUCATION

Bachelor of Science in Chemistry, St. Vincent College, Latrobe, PA 1981
Minors in Biology, German and Mathematics, St. Vincent College, Latrobe, PA 1981

Graduate Studies - Business Administration, Computer Science, Economics and Finance, West Virginia University, Morgantown, West Virginia

EXPERIENCE

CTM ANALYTICAL LABORATORIES, LTD., Latham, NY 1992

Laboratory Director

ANALYTIKEM, INC., Rock Hill, South Carolina 1991 - 1992

Laboratory Manager

Responsible for the daily operation of a full-service environmental laboratory. Duties included: personnel management, project scheduling, capacity utilization and analysis, construction and expansion projects, equipment selection, purchase and installation, assistance in the preparation of the company five (5) year plan.

CEIMIC CORPORATION, Narragansett, Rhode Island 1990-1991

Operations Manager

Directed overall laboratory operations. Improved overall operation by implementing productivity enhancements which increased both sample and data organization.

RADIAN CORPORATION, Research Triangle Park, North Carolina 1989 - 1990

GC/MS Laboratory Supervisor, Staff Scientist

Responsible for VOA, BNA, VOST and air toxics analysis. Significantly improved productivity in these areas. Supervised and instructed chemists in data handling, review and proper method protocols.

Training of the analysts included calibration, operation and maintenance of GC/MS instruments.

INTERNATIONAL TECHNOLOGY ANALYTICAL SERVICES, Pittsburgh, PA 1985 - 1989

GC/MS Team Leader, Evening Shift Supervisor, Chemist III

Responsible for GC/MS analysis of waters, soils and sludges by CLP protocol. Reviewed integrity of GC/MS data, prepared and coordinated CLP data and reports; instructed chemists in data handling, sample preparation, and instrument operation and maintenance.

WHEELING-PITTSBURGH STEEL CORPARATION, Wheeling, West Virginia 1981 - 1985

Environmental Chemist

Responsible for analysis of waste waters by atomic absorption, spectral and wet bench methods.

UNIVERSITY OF PITTSBURGH, Pittsburgh, PA 1981

Research Assistant

Conducted genetic research on cancer cells using radioactive labeling techniques.

KENNAMETAL, INC., Latrobe, PA 1980

Chemical Research Internship

Researched methods of sample preparation for particle size analysis using laser light scattering techniques for the creation of standard laboratory procedures.

PAPERS

THESIS: "Particle Size Analysis Using Lasers and Light Scattering Techniques", St. Vincent College, Latrobe, PA 1981

PROFESSIONAL AFFILIATIONS

American Chemical Society
American Association of MBA's

JEANNIE C. YUAN
Quality Assurance Officer

Ms. Yuan is responsible for overseeing the laboratory's Quality Assurance Program.

EDUCATION

Ph. D. Chemistry, University of Lowell, Lowell, MA 1989
B.S. Chemistry, National Kaohsiung Teachers' College, Kaohsiung, Taiwan, R.O.C. 1978

EXPERIENCE

CTM ANALYTICAL LABORATORIES, LTD., Latham, NY 1992 - Present

Quality Assurance Officer: 7/93 - Present
Metals Supervisor: 1992 - 7/93

REVET ENVIRONMANTAL AND ANALYTICAL LABORATORIES, INC., Worcester, MA 1989 - 1992

Senior Chemist

Supervised GC/MS CLP Laboratory which involved volatile and semivolatile analysis, Quality Control, and training. In charge of the inorganics laboratories for metals analyses.

CHEMISTRY DEPARTMENT, UNIVERSITY OF LOWELL, Lowell, MA 1983 - 1989

Ph. D. Dissertation Research

CHEMISTRY DEPARTMENT, UNIVERSITY OF LOWELL, Lowell, MA 1987 - 1988

Research Assistant

CHEMISTRY DEPARTMENT, UNIVERSITY OF LOWELL, Lowell, MA 1983 - 1987

Teaching Assistant

SHU-LIN MIDDLE SCHOOL, Taipei, Taiwan, R.O.C. 1978 - 1982

Chemistry Teacher

Taught junior high students in General Chemistry courses and Laboratory works.

CHEMISTRY DEPARTMENT, NATIONAL KAOHSIUNG TEACHERS' COLLEGE, Kaohsiung, Taiwan, R.O.C. 1977 - 1978

Undergraduate Research

PUBLICATIONS

T.P. Tougas and Yuan, C.Y., Pittsburgh Conference, 927 (1986)

T.P. Tougas , Yuan, C.Y., Steriti, L., Reed, A.L. and Gardell, M.G. Pittsburgh Conference, 649 (1987)

T.P. Tougas and Yuan, C.Y., Anal. Chim. Acta, 192, 327 (1987)

Report - Atmospheric Pressure Nebulizing Interface for Mass Spectrometry a Detector of Cappillary Liquid Chromatography.

Report - Transmission Spectroelectrochemistry.

Report - Fast Fourier Transform in Electrochemistry.

Report - Chemical Toxicology of Pesticides as Hazardous Wastes.

AFFILIATIONS

American Chemical Society

GREGORY T. GRANDITS
Organics Manager

Mr. Grandits responsibilities include project management involving GC, GC/MS and high technology projects. He is also responsible for supervision and training of personnel in the Organics Section, and analysis by GC and GC/MS. Prepares and executes automated deliverables for USEPA CLP and NYSDEC ASP Protocols.

EDUCATION

B.A. Biology/Chemistry, Alfred University, Alfred, NY 1982

A.A.S. Chemical Technology, State University of New York at Alfred, NY 1982

A.A.S. Medical Technology, State University of New York at Alfred, NY 1982

Telecations Software Training Course for CLP reporting.

Hewlett Packard Training Course, GC/MS capillary techniques course.

Wilson Training Course in Social Styles Series for Management.

EXPERIENCE

CTM ANALYTICAL LABORATORIES, LTD., Latham, NY 1993 - Present

Organics Manager

PACE INCORPORATED, Wappingers Falls, NY 1990 - 1993

Organic Laboratory Manager

Responsible for all facets of the daily operation of the Organic laboratory which included scheduling production, technical trouble shooting, hiring, training and minimizing department expenses.

Manager of Gas Chromatography 1990

Responsible for the operation of the Gas Chromatography Department and Organic Sample Preparation Departments at PACE's New York Office. Developed department operating procedures to comply with EPA and other approved methodologies. Performed high volume analysis of pesticide/PCB and volatile samples.

NANCO ENVIRONMENTAL SERVICES, Wappingers Falls, NY 1989-1990

GC/Analysis/Organic Sample Prep Manager

Responsibilities similar as listed above.

MONROE MEDICAL RESEARCH LABORATORY, Monroe, NY 1983-1989

Laboratory Supervisor

Responsible for developing, standardizing and trouble-shooting gas chromatographic, HPLC systems, and chemical methodologies. Performed quantitative determination of vitamins and metabolites on biological samples using wet chemistry, and column chromatographic techniques.

TECHNICAL KNOWLEDGE

Extensive experience with developing, standardizing and troubleshooting Gas Chromatography (Varian and HP) systems using FID, ELCD, ECD, NPD, TCD, PID, Thermionic, and MS 5970 MSD detectors. Proficient in Reverse and Normal Phase HPLC systems using UV/VIS, and ECD detectors.

Strong knowledge in analysis of Pesticides, PCB's, Semi-Volatiles, and Volatiles using the following methodologies: EPA Methods 500 and 600 series, SW 846, CLP OLM 1.8, High Level Statement Of Work Organics, and NYS ASP. Experienced in NEESA, HAZWRAP and AFCEE Government programs.

WILLIAM MURRY, JR.
Inorganics Manager

Mr. Murry's responsibilities include analysis by ICAP, Managing the Classical Chemistry and the Metals Group; interviews and appraisal of personnel and planning departments future growth on a budgetary level; automated deliverables for USEPA CLP and NYSDEC ASP Protocols.

EDUCATION

A.A. Science, Santa Fe Community College, Gainesville, FL
Attended University of Florida, Gainesville, FL 1972

Relevant Courses:

Inorganic Chemistry
Organic Chemistry I, II (Lab)
Physical Chemistry I, II
Instrumental Analysis
Qualitative Analysis
Independent Study

EXPERIENCE

CTM ANALYTICAL LABORATORIES, LTD., Latham, NY 1990 - Present

Inorganics Manager

YORK LABS IN NEW JERSEY 1987 - 1990

Inorganics Manager

Responsible for managing Classical Chemistry and Metals Department

ETC-TOXICON, Baton Rouge, Louisiana 1986 - 1987

Trace Metals Group Leader

Responsible for scheduling and reviews of analyses, evaluation of personnel and analyses of samples by ICP.

TOXICON LABORATORIES, INC., Baton Rouge, Louisiana 1985 - 1986

Metals Analyst

Responsible for trace metals analyses by flame and graphite furnace, hydride generation AA, cold vapor mercury analysis and ICP; training of personnel on these instruments.

ENVIRONMENTAL SCIENCE AND ENGINEERING, INC., Gainesville, FL
1978 - 1985

Chief Laboratory Technician

Responsibilities included analyses of water, sludge, sediments and fish for trace metal concentrations.

CHRISTINE A. McGRATH
Marketing Manager

Ms. McGrath is responsible for implementing marketing strategies and serving as liason to laboratory staff and management regarding marketing projects and client related issues.

EDUCATION

B.A. Chemistry, College of St. Rose, Albany, NY 1972

Hewlett-Packard GC/MS Environmental Seminar - Presented by Environmental Consulting and Supplies, East Brunswick, N.J., May, 1991.

Integrity Selling - Formalized sales training, completed November, 1993.

Cornell University, School of Management Studies - Currently taking courses for Management Certificate.

EXPERIENCE

CTM ANALYTICAL LABORATORIES, LTD., Latham, NY 1990 - 1993

Senior Chemist / GC/MS Supervisor

Served as a principal analyst in the GC/MS area and was responsible for the training and supervision of GC/MS operators.

C.T.MALE ASSOCIATES, Latham, NY 1988 - 1990

Senior Chemist
GC/MS Analyst

NYS DEPARTMENT OF ENVIRONMENTAL CONSERVATION, BUREAU OF HAZARDOUS WASTES - TECH. SECTION, Albany, NY 1979 - 1980

Senior Chemist

Traveled to hazardous waste sites throughout NYS to evaluate chemical contamination; reviewed plans for hazardous waste sites, waste segregation and appropriate disposal of chemical wastes; reviewed proposals from laboratories replying to Request for Proposals for laboratory services for hazardous waste analyses.

NYS DEPARTMENT OF HEALTH, DIVISION OF LABORATORIES AND RESEARCH, Albany, NY 1977 - 1979

Biochemist

Responsibilities in GC/MS and LC/MS

WINTHROP LABORATORIES, DIVISION OF STERLING DRUG, INC., Rensselaer, NY 1974 - 1977

Associate Production Chemist

Product and process development for pharmaceuticals and specialty organics.

ALBANY MEDICAL COLLEGE, INSTITUTE OF EXPERIMENTAL TOXICOLOGY AND PATHOLOGY, Albany, NY 1972-1974

Laboratory Technician

GC analysis of pesticides; AA analysis of lead.

PROFESSIONAL AFFILIATIONS

American Chemical Society, Eastern New York Section, Public Affairs Chairman, National Chemistry Week Co-chairman

American Industrial Hygiene Association, Iroquois Section

American Institute of Chemical Engineers, Northeastern New York Section

Kimberly Evans
Technical Services Manager

Ms. Evans is responsible for coordination of projects in the laboratory from client contact to final report. Supervises office personnel and associated support staff while scheduling office tasks based on daily workload.

EDUCATION

B.A. Biology & Environmental Science, SUNY, Plattsburgh, NY 1981.

EXPERIENCE

CTM ANALYTICAL LABORATORIES, LTD., Latham, NY 1990 - Present

Technical Services Manager

Technical Marketing Representative

Office Manager

Responsibilities included supervising office personnel and associated support staff and scheduling office tasks based on daily workload.

Project Manager

Responsible for coordination of projects in the laboratory from client contact to final report. Monitored and supervised support staff.

C.T. MALE ASSOCIATES, P.C., Latham, NY 1983 - 1990

Project Manager

Same as above.

Analyst

Performed environmental testing in Classical Chemistry and Organics areas.

PROFESSIONAL SERVICES GROUP, INC., LATHAM, NY 1982 - 1983

Engineering Aide/Field Technician

Water pollution control - Duties included compiling and collecting field data for sewer system defects.

LORRAINE TORAN
GC Supervisor

Ms. Toran is responsible for the training and supervision of GC operators in the organics laboratory.

EDUCATION

B.S. Biology, Cornell University, Ithaca, NY 1983

Hewlett-Packard GC/MS Environmental Seminar presented by Environmental Consulting and Supplies, East Brunswick, NJ. May 1991.

Restek Capillary Chromatography Seminar. October 1993

EXPERIENCE

CTM ANALYTICAL LABORATORIES, LTD., Latham, NY 1990 - Present

Chemist II

WYETH-AYERST LABORATORIES, Rouses Point, NY 1986 - 1990

Associate Analytical Chemist

Analysis of drug compounds by gas chromatography.

RICHARD CAMPBELL
Metals Supervisor

Mr. Campbell analyzes samples in the trace metals section. He is responsible for training and supervising personnel in this area.

EDUCATION

A.A.S. Chemical Technology, SUNY at Cobleskill, Cobleskill, NY 1988

B.S. Chemistry In Progress, Siena College, Loudonville, NY 1997

EXPERIENCE

CTM ANALYTICAL LABORATORIES, LTD., Latham, NY 1990 - Present

Metals Supervisor
Laboratory Technician III

C.T.MALE ASSOCIATES, Latham, NY 1988 - 1989

Laboratory Technician II

DAVID J. O'HEHIR
Supervisor of Sample Preparation

Mr. O'Hehir is responsible for the scheduling and supervision of organic and inorganic sample preparation.

EDUCATION

B.S. Chemistry, SUNY Albany, Albany, NY 1987
New York State Emergency Medical Technician/Paramedic

EXPERIENCE

CTM ANALYTICAL LABORATORIES, LTD., Latham, NY 1991 - Present

Supervisor of Sample Preparation

STATE UNIVERSITY OF NEW YORK RESEARCH FOUNDATION, Albany, NY 1990 - 1991

Research Support Specialist

Responsible for the coordination of five individual projects, supervision and training of personnel and data analysis and interpretation.

NEW YORK STATE DEPARTMENT OF HEALTH, WADSWORTH CENTER FOR LABORATORIES AND RESEARCH, Albany, NY 1988 - 1990

Laboratory Technician

Responsible for the preparation and extraction of PCB samples and the operation and maintenance of GC/EC and GC/MS.

GRAPHIC TECHNIQUES, INC., Albany, NY 1987 - 1988
Assigned to General Electric Corporate Research & Development

Laboratory Technician

Responsible for running and maintaining electrolysis plating bath. Physical, chemical and instrumental methods were used in quality control.

MOHAWK AMBULANCE SERVICE, Schenectady, NY 1986 - Present

Paramedic

Responsible for emergency care given to ill or injured persons.

JOHN DOMBROSKI
Classical Chemistry Supervisor

Mr. Dombroski performs tests in Classical Chemistry. He is responsible for the training and supervision of personnel in this area.

EDUCATION

Bachelor of Science, Geo-Chemistry, SUNY, Cortland, NY 1978
Associate in Science, Finger Lakes Community College, Canadaigua, NY 1975

EXPERIENCE

CTM ANALYTICAL LABORATORIES, LTD., Latham, NY 1992 - Present

Classical Chemistry Supervisor

THORNTON LABORATORIES, INC., Tampa, FL 1979, 1980, 1988 - 1992

Trace Metals Dept. Supervisor

Responsibilities included daily organization and coordination of sample preparation, analysis, results reporting and disposal.

HERNANDO HIGH SCHOOL, Brooksville, FL 1985 - 1988

Science Instructor

Taught Advanced Placement Chemistry, Chemistry, Biology and Earth Science. During summers taught Geology and Archeology.

GEONEX CORPORATION, St. Petersburg, FL 1980 - 1985

Laboratory Manager, Springfield, Illinois

Responsible for the planning, development and ongoing operation of a general chemistry laboratory with emphasis in oil analysis.

Production Manager, St. Petersburg, FL

Supervised employees involved in all phases of ocean bottom contour map production.

GREGORY J. WHITTLE
Field Engineer, Field Sampling Supervisor

Mr. Whittle is responsible for coordination of all aspects of environmental sampling of groundwater, sediments, soil, sludges and air, including safety requirements, equipment maintenance and operation of portable field testing equipment. Experience and responsibilities in infiltration/inflow studies of sanitary sewer systems, industrial wastewater monitoring and facilities engineering, wastewater facilities planning, field supervision of flow measurement and sampling programs, and data compilation and construction coordination of waterworks and wastewater projects.

EDUCATION

B.S. Civil Engineering, Rensselaer Polytechnic Institute, Troy, New York 1979.

A.A.A. Engineering Science, Hudson Valley Community College, Troy, New York 1973.

Completed the 40 hour Health and Safety Training for Hazardous Waste Operations required by OSHA.

EXPERIENCE

CTM ANALYTICAL LABORATORIES, LTD., Latham, NY 1990 - Present

Field Engineer

C.T. MALE ASSOCIATES, Latham, NY 1975 - 1989

Field Engineer

U.S. ARMY CORPS OF ENGINEERS, Ft. Devens, MA 1973 - 1975

Lieutenant

UNITED STATES MILITARY ACADEMY, West Point, NY 1974

Instructor of Demolition Engineering

KAREN K. METZGER
Chemist II

Ms. Metzger is responsible for sample analysis in the organics area by GC/MS.

EDUCATION

B.S. Chemistry, Hobart and William Smith Colleges, Geneva, NY 1984

Health and Safety Management for Hazardous Waste Site Investigations - 1985 presented by Phoenix Safety Management, Inc., King of Prussia, PA.

Transport and Fate of Chemicals in the Environment - 1986, Boston, MA, Dr. Thiboudeaux, Chemical Engineer

HP - Introduction to MS/Interpretation. September 1993

EXPERIENCE

CTM ANALYTICAL LABORATORIES, LTD., Latham, NY 1991 - Present

Chemist II

CORNELL/NYS AGRICULTURAL EXPERIMENT STATION, Geneva, NY 1990 - 1991

Chemical Technician

Performed pesticide analysis; assisted in preliminary literature research; worked on method development and assisted in data tabulation and report generation.

EASTMAN KODAK CORPORATION, Rochester, NY 1989 - 1989

Gas Chromatography Technician

Performed soil and water analyses for the Chemical Quality Services Division.

CORNELL/NYS AGRICULTURAL EXPERIMENT STATION, Geneva, NY 1982 - 1988

Chemist in Horticultural Science

Performed agricultural research for genetic selection using transformed DNA techniques.

METCALF & EDDY, INC., Wakefield, MA 1984 - 1987

Environmental Chemist

Performed analyses on soil, water, wastewater and industrial/hazardous wastes in the Chemical Engineering, Hazardous Waste Management Division.

CORNELL/NYS EXPERIMENT STATION, Geneva, NY 1979 - 1982

Plant Pathology Technician

Performed research in crop diseases.

JOS. SCHLITZ BREWING CO., Baldwinsville, NY 1977 - 1977

Quality Control Technician

Performed laboratory analysis of product including samples from all stages of process.

PROFESSIONAL AFFILIATIONS

Sigma Xi Scientific Research Society

PETER N. CAHILL
Chemist II

Mr. Cahill is responsible for sample analysis in the organics area by GC/MS.

EDUCATION

B.S. Chemistry, SUNY at Plattsburgh, NY 1992

A.A.S. Environmental Science, Hudson Valley Community College, Troy, NY 1980

HP - Introduction to MS/Interpretation. September 1993

Tekmar - Environmental Forum: Innovative Approaches to Analysis of VOC's in Water, Soil, and Air. October 1993

EXPERIENCE

CTM ANALYTICAL LABORATORIES, LTD., Latham NY 1990 - Present

Chemist II
Laboratory Technician II

CIBRO BROTHERS PETROLEUM, Albany NY 1990 - 1990

Laboratory Technician

Assisted in the evaluation of raw and finished product.

GENERAL ELECTRIC PLASTICS PLANT, Selkirk NY 1989 - 1990

Contract Labor Services

Assisted in categorization of waste

POWELL AND MINNOCK BRICK PLANT, Coeymans, NY 1989 - 1989

Laboratory Technician

Performed color formulation and materials testing in the Quality Assurance Laboratory.

FAY S. NAVRATIL
Chemist II

Ms. Navratil is responsible for sample analysis in the organics area by gas chromatography.

EDUCATION

B.A. Biology/Zoology, SUNY at Oswego, Oswego, NY 1983

Completed the Health and Safety Training for Hazardous Waste Operations required by OSHA.

Restek Capillary Chromatography Seminar, October 1993

EXPERIENCE

CTM ANALYTICAL LABORATORIES, LTD., Latham, NY 1990 - Present

Chemist II

Classical Chemistry Supervisor 1990 - 1993

Performed tests in Classical Chemistry. Was responsible for the training and supervision of personnel in this area.

C.T. MALE ASSOCIATES, Latham, NY 1987 - 1990

Laboratory Technician II

THE KOLBURNE SCHOOL, Marlborough, MA 1985 - 1987

Teaching Assistant

Assisted teachers in regular classroom activities; constructed and implemented an extra-curricular science program for learning disabled students.

EA ENGINEERING, SCIENCE AND TECHNOLOGY, INC., LINCOLN, NE 1985

Environmental Specialist

Responsible for water chemistry and bacteriological sample analysis at regional laboratory facility. Participated in collection of water and biological samples, including phytoplankton, benthos and fisheries.

EA ENGINEERING, SCIENCE AND TECHNOLOGY, INC., Oswego, NY 1984- 1985

Environmental Technician

Responsible for collection of impingement and radiological samples for two major utilities in upper New York State.

DEPARTMENT OF THE INTERIOR, BUREAU OF LAND MANAGEMENT, Idaho Falls, ID 1983

Conservation Aide

Participated in collection of data used by Bureau to complete a water/watershed/erosion inventory.

STATE UNIVERSITY RESEARCH CENTER, Oswego, NY 1982 - 1983

Research Intern

Participated in studies that required preparation and analysis of sediment, tissue and water samples for Mirex and PCB analysis.

TIMOTHY MAXWELL HOLTEEN
CHEMIST II

Mr. Holteen is responsible for analyses in gas chromatography.

EDUCATION

A.S. Aeronautical Science, Embry-Riddle Aeronautical University. 1991

B.A. Chemistry, University of Vermont. 1988

Restek Capillary Chromatography Seminar. October 1993

EXPERIENCE

CTM ANALYTICAL LABORATORIES, LTD., Latham, NY 1993 - Present

Chemist II

SAYBOLT, INC., South Boston, MA 1992 - 1993

Petroleum Chemist
Tested fuel oils and gasoline for quality assurance criteria using ASTM methods.

ENVIROLAB, Ormond Beach, FL 1990 - 1992

Organic Chemist
Operated Perkin-Elmer 8500 GC with Hall/PID detector for volatile ogranics analysis.

Water Chemist

Analyzed water and sludge samples for selected nutrients and minerals.

QC, INC., Southampton, PA 1987 - 1990

Organic Chemist

Prepared and analyzed water and soil samples for volatile and semi-volatile compounds using EPA methods. Operated Finnigan 1050, 5100 and INCOS 50 mass spectrometers, Hewelet-Packard GC/MS and Varian Model 3400 gas chromatographs. Supervised second shift.

GOLDA YELAUN
Chemist III

Ms. Yelaun is responsible for analysis in the area of Metals.

EDUCATION

M.S. Chemistry, Chernovtsy, USSR 1971

EXPERIENCE

CTM ANALYTICAL LABORATORIES, LTD., Latham, NY 1992 - Present

Chemist III

STATE WATER RESOURCES AUTHORITY, Kishinev, USSR 1982 - 1990

Analytical Chemist

Responsible for the procedures of all laboratory phases, including surface and groundwater parameters, safe drinking water and soil parameters for compliance with standards. Wrote and reviewed all laboratory test reports.

AGRICULTURE INSTITUTE, Kishinev, USSR 1971 - 1982

Geotechnical Analytical Chemist

Implemented chemical and mechanical methods for evaluating and estimating the quality of building materials, groundwater and soil samples. Prepared and preserved samples for testing. Introduced instructions for taking samples in irrigation, amelioration of contaminated soils, and at construction sites.

LINDA S. MAGENIS
CHEMIST I

Ms. Magenis is responsible for analysis in the area of classical chemistry.

EDUCATION

B.S. Biochemistry, Russell Sage College, Troy, NY 1993.

EXPERIENCE

CTM ANALYTICAL LABORATORIES, LTD., Latham, NY 1993 - Present.

Chemist I

SCHENECTADY CHEMICALS, Niskayuna, NY 1992 - 1993.

Research Laboratory Technician

Performed batch reactions, tested and analyzed compounds for product development. Worked with minimum supervision.

SYAMALA PRASAD
Chemist I

Ms. Prasad is responsible for analyses in the Wet Chemistry department.

EDUCATION

Certified Nursing Assistant, N.Y.S. Department of Health 1990.

Medical Laboratory Technician, Kairali Pathological Laboratory and School of Medicine, India 1981 - 1983.

2yr. degree Chemistry, NSS College, University of Kerala, India 1978-1980.

EXPERIENCE

CTM ANALYTICAL LABORATORIES, LTD., Latham, NY 1993 -Present.

Chemist I

ENVIRONMENT ONE, Schenectady, NY 1987 - 1992.

Lab Technician

Performed classical chemistry and bacteriological tests and maintained QC standards.

HALLMARK NURSING CENTER, Schenectady, NY 1987 - 1993.

Certified Nursing Assistant

Provided personal care and feeding of patients.

SHAKUNTHALA MATERNITY, New Delhi, India 1984 - 1986.

Medical Lab Technician

Analyzed a variety of blood, urine, stool and fertility tests. Collected and prepared specimen samples and transcribed reports.

ST. MARY'S HOSPITAL, Kerala, India 1983 - 1984.

Same as above.

SYAMALA PRASAD
Chemist I

Ms. Prasad is responsible for analyses in the Wet Chemistry department.

EDUCATION

Certified Nursing Assistant, N.Y.S. Department of Health 1990.

Medical Laboratory Technician, Kairali Pathological Laboratory and School of Medicine, India 1981 - 1983.

2yr. degree, NSS College, University of Kerala, India 1978-1980.

EXPERIENCE

CTM ANALYTICAL LABORATORIES, LTD., Latham, NY 1993 -Present.

Chemist I

ENVIRONMENT ONE, Schenectady, NY 1987 - 1992.

Lab Technician

Performed classical chemistry and bacteriological tests and maintained QC standards.

HALLMARK NURSING CENTER, Schenectady, NY 1987 - 1993.

Certified Nursing Assistant

Provided personal care and feeding of patients.

SHAKUNTHALA MATERNITY, New Delhi, India 1984 - 1986.

Medical Lab Technician

Analyzed a variety of blood, urine, stool and fertility tests. Collected and prepared specimen samples and transcribed reports.

ST. MARY'S HOSPITAL, Kerala, India 1983 - 1984.

Same as above.

BRETT W. MCCUTCHEON
Quality Assurance Assistant

Mr. McCutcheon is responsible for coordinating the compilation of CLP reports and to assist the QA Officer in all Quality Assurance related duties.

EDUCATION

B.A. Computer & Information Science, Potsdam College of SUNY, Potsdam, NY 1988
Minors in Business Economics and Psychology

EXPERIENCE

CTM ANALYTICAL LABORATORIES, LTD., Latham NY 1993 - Present

Quality Assurance Assistant

TACONIC PLASTICS LTD., INC., Petersburg NY 1992-1993

Programmer/Analyst

Programmed modules to produce and maintain all company financial statements. Provided real-time error correction to antiquated live modules such as payroll, inventory, customer service, manufacturing. Restored system integrity after physical data failures. On call end user PC support as needed.

MATTHEW BENDER & COMPANY, Albany NY 1991 - 1992

Electronic Publishing Order Specialist

Ensured accuracy of CD-ROM order fulfillment by establishing coding procedural guides, training coding staff, and monitoring orders prior to input for invoicing. Completed follow-up activities with customers, editorial staff, and marketing to resolve problem areas. Controlled shipping and invoicing of monthly and quarterly CD-ROM legal publications.

GENERAL ELECTRIC COMPANY, Schenectady NY 1989 - 1991

Application Systems Engineer

Assigned to Turbine Products Division to reduce customer quote and order backlogs. Programmed and implemented procedures for producing statistical reports used by management to improve backlog status. Modified Application System programs to enhance existing reports. Provided end-user systems support on customer order systems.

GENERAL ELECTRIC COMPANY, Schenectady NY 1989

MRP Planner/Systems Engineer

Assisted Turbine Products Division during critical transition period between existing PROPS and CORMES order handling systems to an IBM COPICS MRP-II system. Implemented and maintained item masters, bill of materials, routings, etc. necessary for the COPICS system. Tracked material inventory in the division's Rotor Production Company.

GENERAL ELECTRIC COMPANY, Schenectady NY 1988-1989

Network Planning Consultant

Turbine Projects Department was engaged in the implementation of an Artemis 7000 Network Planning applications software package. Created test data and performed testing analysis of previously created application routines. Located logic errors and identified possible future logic problems. Proposed to the systems integration programming team any additional application needs as well as corrections to existing errors.

PRINCE M. KNIGHT III
Laboratory Scheduler/Client Services Coordinator

Mr. Knight is responsible for the scheduling of the production groups and for ensuring adherence to schedules.

EDUCATION

A.A.S. Biology, Rochester Institute of Technology, Rochester, NY 1989

Human Physiology, Russell Sage College 1991

EXPERIENCE

CTM ANALYTICAL LABORATORIES, LTD., Latham NY

Laboratory Scheduler/Client Services Coordinator 1992-Present

Wet Chemistry Supervisor 1991 - 1992

Responsible for organizing and managing daily procedures for three Laboratory Technicians. Other responsibilities included reviewing all analytical and quality control data produced by the Wet Chemistry department, attending weekly managerial meetings to communicate specifics on projects relating to this department.

Laboratory Technician 1990 - 1991

Responsible for inorganic analyses utilizing EPA, NYS DOH and SM 15th ed. methodology. Operated Spectrophotometer, Infrared Spectrometer (variable and fixed wavelengths), Total Organic Carbon analyzer, and TrAAcs800 Auto Analyzer.

ALBANY MEDICAL COLLEGE, Albany NY Summers 1986, 1987

Laboratory Assistant

Completed research experiments on a grant from Albany Medical College. Planned and conducted experiments in the polymerization of the protein Actin using Spectrophotometers, Fluorometers, High Pressure Liquid Chromatography, and Electrogelferrisis. Completed scientific paper for reference use in future group publication.

BRIDGET N. O'HANLON
Laboratory Technician

Ms. O'Hanlon is responsible for bottle preparation.

EDUCATION

B.S. Chemical Engineering, Rensselear Polytechnic Institute, Troy NY 1993

EXPERIENCE

CTM ANALYTICAL LABORATORIES, LTD., Latham NY 1993 - Present

Laboratory Technician

GENERAL ELECTRIC, Albany NY 1991- 1991

Laboratory Technician

Performed testing and evaluation of pressure drop through ceramic honeycombs, alkaline cleaners to replace chlorinated solvents and corrosion resistance of coatings and metals. Tested corrosion inhibitors, underdeposit corrosion and stress corrosion cracking. Wrote internal GE reports "Pressure Drop Measurements Across Ceramic Honeycombs" and "Underdeposit Corrosion".

LAB SAFETY MANUAL

CTM Analytical Laboratories, Ltd.
15 Century Hill Drive
P.O. Box 727
Latham, New York 12110
(518) 785-1805
FAX (518) 785-0370

Revised: 11/11/93

INDEX

		PAGE
I	GENERAL REQUIREMENTS FOR PERSONAL AND LABORATORY SAFETY	1
II	WARNING SIGNS AND LABELS	4
III	FIRE PREVENTION AND CONTROL	5
IV	ELECTRICAL SAFETY	7
V	COMPRESSED GASES	8
VI	CHEMICAL HAZARDS	9
VII	HAZARDOUS WASTE SAMPLES	12
VIII	REPORTS OF INCIDENTS AND ACCIDENTS	15
IX	OSHA CHEMICAL HYGIENE PLAN	16
X	CHEMICAL HAZARD ALERT FORMS/MATERIAL SAFETY DATA SHEETS	18
XI	CTM SAFETY COMMITTEE	28
XII	EMERGENCY RESPONSE PLAN	29

TABLES

I. GENERAL REQUIREMENTS FOR PERSONAL AND LABORATORY SAFETY

SECTION
1. Smoking
2. Eating and Drinking
3. Food
4. Cosmetics
5. Contact Lenses
6. Safety Glasses
7. Face Protection
8. Clothing
9. Shoes
10. Hair
11. Beards
12. Hand Washing
13. Mouth Pipetting
14. Aisles and Exits
15. Good Housekeeping
16. Glassware
17. Centrifuges
18. Autoclaves
19. Machinery

1. **SMOKING** is prohibited in the building. Smoke is annoying to some, the burning cigarette is an ignition source to flammable solvents, and the handling of cigarettes from bench to mouth is a route of exposure for both bacteria and certain toxic materials, such as mercury.

2. **EATING AND DRINKING** are also prohibited in the technical work areas. It is poor laboratory practice, a source of contamination, and samples (sludge, waste water, oil) containing a variety of poisons are handled daily in the technical work area and stored in the lab refrigerators.

3. **FOOD** is not permitted in technical refrigerators.

4. **APPLICATION OF COSMETICS** in the technical work area is prohibited.

5. **CONTACT LENSES**, especially the soft ones, will absorb certain solvents and also constitute a hazard in splashes or spills, offer no protection from a splash and may concentrate caustic materials against the cornea or prevent tears from washing a caustic away. You are prohibited from wearing contacts in the laboratory.

6. **SAFETY GLASSES**: Safety glasses must be worn at all times in analytical sections of the laboratory.

7. **FACE PROTECTION**: CTM staff has access to two full face shields for splash protection located in the glassware washing area.

8. **CLOTHING**: Lab coats shall be worn when working. Do not wear clothing with a high percentage of acetate, or other highly flammable material. Lab coats should be removed and left in the technical areas so as not to contaminate offices or eating areas.

9. **SHOES**: Should be comfortable, rubber soled, and cover the entire foot (lace or loafer type).

10. **HAIR** shall be secured back and off the shoulders in such a manner as to prevent it from coming into contact with contaminated materials or surfaces and also to prevent shedding of organisms into the work area. This is especially true in microbiology. It is also important to keep hair out of moving machinery such as a centrifuge.

11. **MEN WITH BEARDS** must observe the same precautions. Long beards are a danger in regard to moving equipment and all beards are a source of contamination.

12. **HAND WASHING**: Hands should be washed frequently during the day, before leaving the laboratory, and before eating or smoking.

13. **MOUTH PIPETTING** of specimens is prohibited. There are pipetting aids available for every task.

14. **EXITS AND AISLES**:
    a. Must not be obstructed in any way. No equipment, chairs, supplies or trash are permitted in exit routes or areas.
    b. Doors to the laboratory should be kept closed, but exit doors must not be blocked, bolted, or obstructed in any way to block egress.

15. **GOOD HOUSEKEEPING**:
    a. Do not hang clothing on or near radiators, steam pipes, heating instruments, or open flames.
    b. Do not allow trash to accumulate in any area. Trash should be disposed of daily.
    c. Samples restricted to analytical and log-in areas only.
    d. Festive decorations will be limited to designs on glass outside of laboratory work areas. Hanging decorations and wax candles are prohibited. Decorations on lights and instruments are prohibited.

16. **GLASSWARE**:
    a. Do not use broken or chipped glassware. Discard it and order new.
    b. Do not leave pipets sticking out of bottles, flasks, or beakers.
    c. Do not attempt to remove stoppers on glass tubing by forcing. If they are stuck, cut them off.
    d. Dispose of broken or discarded pieces in a specially marked separate container. (Disposal of broken glass along with paper and trash is a hazard to the custodial staff).
    e. Hot glass-heated containers should be handled with an insulated glove.

17. **CENTRIFUGES:**
    a. Do not operate centrifuges unless the covers are closed. Keep hair, beard, neck ties, hair ribbons or other frilly or dangling items **OUT OF THE WAY.**
    b. Do not centrifuge uncovered tubes of samples, or flammable liquids. Centrifugation creates a vacuum and volatilizes liquids. (Contaminated items become aerosols, flammable liquids become bombs, etc.) **USE CAPS OR PARAFILM.**

18. **AUTOCLAVES:**
    a. Personnel should not operate autoclaves until they have been checked out in the proper operation.
    b. Do not open until both temperature and pressure are back to normal.
    c. Be sure intake steam valve is off before opening.
    d. Use insulated gloves when putting items into or removing items from the autoclave. The sides and door may be hot in addition to the material being autoclaved. NOTE: Beware of steam which will permeate gloves.
    e. Loosen caps of any containers to allow equalization of pressures inside containers. This prevents explosions, boil-overs, and implosions.

19. **ALL MACHINERY:** No machinery should be operated until the analyst/technician is properly trained in the safety operation of the equipment (i.e. separatory funnel shaker, liquid/liquid extractor, muffle furnace, etc...).

II. WARNING SIGNS AND LABELS

SECTION
1. Purpose
2. Policies
3. Labeling
4. Signs

1. **PURPOSE:** To provide a uniform policy and procedure for indicating the presence of certain hazards that may not be apparent to the casual observer.

2. **POLICIES:**
   a. Area designations: There is no "high risk" areas except in the chemical hoods and in the storage area. The technical work areas will be considered to be "moderate risk" and restricted to laboratory personnel. Administrative, clerical, and client areas are considered to be "low risk" areas and are not restricted.
   b. Posting: There may be high risk periods of time that require posting while the hazard exists. In others the designations are permanent and restrictions and signs are posted.
   c. Labels with appropriate warnings will be affixed to all hazardous reagents in addition to required labels indicating content.

3. **LABELS:**
   a. All reagent kits and materials must be labeled in regard to:
      Content
      Concentration (if applicable)
      Date Received (or prepared)
      Date Placed in Service
      Storage Requirements
   b. All stock reagents must also be labeled in regard to:
      Caution Required
      Type of Hazard (poison, irritant, inhalant, carcinogen)
      Precautions (do not pipet, avoid skin contact, do not inhale, use only in enclosed area, use only in ventilated area, etc.).
      Instructions in Case of Accident (wash immediately).
   c. The Hazard Identification System of the National Fire Protective Association will be used. Ref; Hazardous Clinical Data (NFPA No. 49), Manual of Hazardous Clinical Reactions NFPA 49, M), Fire Hazard Properties of Flammable Liquids, Gases and Volatile Solids (NFPA No. 325 M) and Recommended.

4. **SIGNS:** Should be posted as needed, for example:
   Type of hazard: Biologic, etc.
   Type of caution required: Restricted to Laboratory personnel.

III. FIRE PREVENTION AND CONTROL

SECTION
1. Prevention
2. Priorities in Case of Fire: Alarm, Evacuation, Control
3. Responsibilities
4. Control of Fires
   a. Solid Combustibles
   b. Flammable Liquids
   c. Electrical
   d. Gas

1. **PREVENTION:**
   a. Be aware of ignition sources - open flames, cigarettes, heating elements and spark gaps (motors, light switches, friction and static). SMOKING is not permitted in the laboratory.
   b. Do not use flammable liquids in presence of ignition sources - and conversely - keep ignition sources away from areas where flammable liquids are used and/or stored.
   c. Flammable liquids give off vapors which may also burn or explode. Be sure flammable liquids are properly stored.
      1) Quantities of one gallon or over in SAFETY CANS.
      2) Small quantities "in use" should be stored in well ventilated areas.
   d. DO NOT STORE ETHER IN REFRIGERATORS OR COLD ROOMS.
   e. Do not store any flammable liquid in areas exposed to direct sunlight.
   f. Festive decorations are restricted to painted decorations on glass. Hanging decorations are prohibited.

2. **PRIORITIES IN CASE OF FIRE:**
   a. Sound alarm first to get help and to initiate evacuation of the area or building. This is essential because small fires can rapidly become conflagrations. Time wasted fighting a fire may only delay effective control and may cost lives.
   b. Procedure for reporting: Activate alarm system - located on wall at each exit from lab.
   c. Evacuation:
      1) Evacuate the immediate area of the fire.
      2) WALK - DO NOT RUN, to the nearest exit. Assemble all laboratory personnel together outside the building and proceed to the cul de sac.

3. **RESPONSIBILITIES:**
   a. Safety officer & Safety Representatives: Check to be sure all personnel have been evacuated.
   b. Fire Marshals:
      1) Close doors and windows.
      2) Shut down electrical and gas equipment.
      3) Conduct orderly evacuation.

4. **CONTROL OF FIRES:**
   a. Evaluation:
      1) Evaluate the type and extent of the fire. If it's going to be a large fire, get out! Control measures should only be undertaken for small isolated fires.
      2) Evaluate the type of material burning (wood, flammable, liquids, electrical or gases).
   b. Solid Combustibles:
      1) Small objects may be handled with insulated gloves, and extinguished with water or with CO_2.
      2) Water or dry chemical extinguishers may be needed for large fires.
   c. Flammable Liquids:
      1) Dry chemical extinguishers are usually needed for safe and effective control of burning liquids. CO_2 will be effective only on a small fire. DO NOT USE WATER (it enhances spread).
      2) If flammable liquids have spilled but not ignited, sand (or other nonflammable absorbent) may be used to prevent spread and reduce the fire hazard. A dry chemical extinguisher should be available in case of fire.
   d. Electrical:
      1) Do not use water unless the circuit has been shut down. (If the power is off, water can be used.)
      2) Shut down circuit if possible.
      3) CO_2 is most suitable but dry chemical is safe and effective.
   e. Gas:
      1) Shut off source if possible.
      2) "BLOW OUT" flame with CO_2 (possible only when gas has been shut off).
      3) Keep other flames away from gas cylinders.

5. **FIRE SAFETY EQUIPMENT IN THE LABORATORY:**
   a. Fire Extinguishers: are of the CO_2 and dry chemical type. They may be used on any type of fire. Halon extinguishers are used for electronic equipment. (Refer to Table II).
   b. Fire Blankets: may be used to smother a clothing fire by wrapping the victim or rolling them on the ground. Fire blankets may also be wrapped around a person who has to pass through a burning area. (Located in organic extraction area).
   c. Insulated Gloves: may be used to move or handle a small burning object, or to handle hot vessels, or to turn off hot valves or handles.

      CAUTION: Gloves are permeable. Steam or hot liquids can soak through and cause injury.

IV. ELECTRICAL SAFETY

SECTION
1. Grounding
2. Report Shocks
3. Corrective Actions
4. Repairs on Instruments
5. Repairs on Building
6. Extension Cords
7. Electrical Shock Accident

1. **GROUNDING**: All instruments must be grounded including household type appliances, coffee pots, etc. The only exceptions to the rule are items entirely encased in plastic (such as microscopes).

2. **REPORT SHOCKS**: All shocks must be reported immediately, including small tingles. Small shocks often proceed major shocks and a light tingle may indicate potential trouble.

3. **CORRECTIVE ACTIONS**: Shut off the current and/or unplug the instrument. Do not attempt to use an instrument that is causing shocks. Not only is it potentially dangerous, but any results from the instrument would be suspect.

4. **REPAIRS**: DO NOT work on or attempt to repair any instrument while it is plugged in. An exception is the calibration of instruments which require adjustment while plugged in. In this case, be sure hands are dry, remove all jewelry (watches and rings) and proceed with caution.

5. **REPAIRS** on the electrical system of the building are prohibited. Any work performed on switches, outlets or circuit boxes (fuses, circuit breaker) must be referred to the building maintenance personnel.

6. **EXTENSION CORDS** should be avoided. If used, they must be 3-way type and properly grounded. Gang plugs are prohibited.

7. **ELECTRICAL SHOCK ACCIDENT**: **MINOR**: In the event that an electrical piece of equipment sparks, begins to smoke or burn or gives a shock when touched, immediately pull the plug. If the equipment cannot be approached, go to the circuit panel and flip the circuit breaker controlling that circuit to OFF.

   MAJOR: In the event that an employee receives a serious life threatening shock from a piece of equipment, do not attempt to approach or remove them. First, go to the lab circuit panel and turn off the power to that area of the lab by flipping the appropriate breaker to OFF (all breakers are labeled as to area or equipment they control). If there is any question about the correct breaker, switch all breakers to OFF. Once power is OFF, send for help and if trained in basic life support, assess the condition of the individual.

V. COMPRESSED GASES

SECTION
1. Introduction
2. General Standards
3. Flammable Gases (Hydrogen, Acetylene)
4. Pressure Regulators and Needle Valves
5. Leak Testing
6. Empty Cylinders

1. **INTRODUCTION**: Compressed gases constitute several hazards. Any gas cylinder with a broken valve head becomes a missile capable of penetrating walls. Specific gases may be toxic or flammable. Finally, heating of cylinders may result in explosion.

2. **GENERAL STANDARDS**:
   a. Cylinders must be secured at all times so they cannot fall.
   b. Valve safety covers should be left on until pressure regulators are attached.
   c. Containers must be marked clearly with the name of the contents. Tanks with wired on tags or color code only should not be accepted.
   d. The use of oil, grease or lubricants on valves, regulators, or fittings is prohibited.
   e. Do not attempt to repair damaged cylinders or to force frozen cylinder valves.

3. **FLAMMABLE GASES**: Special care must be used when gases are used in confined spaces.
   a. Valves on all flammable gas cylinders shall be shut off when not in use.

4. **EMPTY CYLINDERS**:
   a. Must be marked empty and removed to the empty cylinder storage area.
   b. Empty or unused cylinders must be returned promptly. Demurrage charges continue until the tank is returned to the supplier.
   c. Replace valve safety caps.

VI. CHEMICAL HAZARDS

SECTION
1. Introduction
2. Classification
3. Labeling
4. Storage of Corrosives
5. Storage of Flammables
6. Handling Caustic Materials
7. Breaks and Spills
8. Mercury

1. **INTRODUCTION:** A number of routine procedures in the laboratory involve the use of highly caustic poisonous, or flammable reagents. These should be appropriately labeled to indicate the hazards. Read labels and observe precautions. Failure to follow safe practice is cause for disciplinary action. CONSULT THE "MATERIAL SAFETY DATA SHEET" book for any questions regarding safe handling of chemicals.

2. **CLASSIFICATION:** Dangerous chemicals may be grouped into the following:
   a. Caustic or Corrosive: Acids and bases greater than 0.05N may cause burns of skin or mouth, or eyes and may also cause damage to equipment and storage areas.
   b. Poisons: Almost any substance in quantity can be poisonous. For these purposes, a poison will be classified as a substance which may cause death or serious effects if relatively small amounts are inhaled, ingested or contact the skin (such as concentrated phenols). Poisons may be gas, liquid or solid.
   c. Carcinogens: Substances designated by OSHA as carcinogenic require special handling.
   d. Flammables: Such materials that easily ignite, burn and serve as fuel for a fire.
   e. Explosive: Materials which may explode under special circumstances.

3. **LABELING:** All dangerous chemicals must be labeled to indicate:

Need for caution.....	CAUTION
Type of Hazard.....	IRRITANT
Precautions to be observed.....	AVOID SKIN CONTACT. DO NOT PIPET.
Instructions in case of accident.....	WASH EXPOSED AREA IMMEDIATELY.

4. **STORAGE OF CORROSIVES:**
   a. Store caustic and corrosive materials near the floor to minimize danger of bottles falling from shelves.
   b. Separate containers to facilitate handling. Organic acids (acetic and acetic anhydride) should be stored separately from strong oxidizing agents (sulfuric, nitric or perchlorate) to prevent interaction of fumes and corrosion of storage cabinets.
   c. Acid bottles carriers must be used for containers over 1 quart in size.

5. **STORAGE OF FLAMMABLES:**
   a. Quantities of one gallon or over must be stored in a safety can. If a reagent must be stored in glass for purity, the glass container may be placed in a bottle carrier to lessen the danger of breakage.
   b. Small quantities (working amounts) may be stored on open shelves, but bulk storage (more than 5 gallons) must be in safety storage areas.
   c. Do not store ether in a closed area such as a refrigerator.
   d. Do not store flammables in areas exposed to direct sunlight.

6. **HANDLING CAUSTIC MATERIALS:**
   a. If quantities of acids or bases are being used, use a shield or barrier of some kind or work in a sink so that breaks or spills can be controlled.
   b. Wear aprons, gloves and eye protection devices when handling highly corrosive materials.
   c. Do not pipet by mouth.
   d. Do not sniff reagents.
   e. Dilution: Use great care and add reagents SLOWLY. Always add ACID to WATER, never water to acid. Allow acid to run down the side of the container and mix slowly by gentle rotation. Avoid over heating.

7. **HANDLING MATERIALS WITH "AVOID BREATHING VAPORS/DUST" WARNING**

Exhaust Hoods are provided for those sections of the lab where exposure to toxic vapors or dust is likely. In general, air flow across the working area of the hood should be 100/fm. However, this is dependent upon actual use of the hood. The deciding factor is whether or not the hood effectively removes contaminants and this is the decision of supervising personnel familiar with the hazards of chemicals used in the hood.

Each hood is tested every six months by personnel from the C.T. Male Associates, P.C. Mechanical Engineering Dept. The results of that testing are kept on file by the Chemical Hygiene Officer and are available for review, upon request. Any decline in hood performance requires remedial action. The Chemical Hygiene Officer will contact the Mechanical Engineering Dept. at C.T. Male Associates, P.C. to initiate correction of the problem.

   a. For non-flammable substances always work with chemicals in a fume hood.
   b. For flammable substance work only in the explusion-proof hood. Do not use electrical appliances in this hood unless they are UL listed as explosion-proof.

8. **BREAKS AND SPILLS: (Spill cart is located in metals digestion area next to walkin)**
   a. Skin/eye/mouth contact: wash area immediately.
   b. Clothing spills: take item of clothing off immediately to avoid soaking through to skin. This includes belts and shoes (if affected).
   c. Contain spills with pillows or other absorbent material such as kitty litter. Follow directions on box. Wash area thoroughly after clean up.
   d. Disposal: Liquids mixable with water should be flushed down the sink with copious amount of water. Used spill pillows should be placed in the SOLID HAZARDOUS WASTE CAN.

9. **MERCURY:**
   a. Avoid or minimize spills of elemental mercury as far as possible.
   b. Clean up gross spills with a pipet or "sweeper". Ventilate area well to remove mercury vapors.
   c. Chronic exposure and absorption of mercury may lead to a metallic taste in the mouth, a "lead line" (gray line) around gums, and neurologic problems (irritable, hyperreflexic, comatose).
   d. Do not place element mercury waste in drains.

VII. HAZARDOUS WASTE SAMPLES

SECTION
1. Definition
2. Receipt
3. Handling
4. Storage
5. Hazardous Waste Coordinator
6. Disposal

1. **DEFINITION** - All samples of unknown origin or having no previous analytical history should be considered as potentially hazardous with the exception of surface or groundwater samples intended for drinking water use.

2. **RECEIPT** - Disposable gloves must be worn when handling sample containers. Containers should be inspected for exterior contamination, leakage or damage. Samples are placed on the mobile sample cart(s) during this process. If a damage problem is noted, the sample should be transferred to a new container in a fume hood.

3. **HANDLING** - When transporting the samples from the reception area to the storage or analytical areas the samples should be carried in a plastic transport crate or on the mobile sample cart. Sample containers should never be arm carried.

   When containers are opened for analysis proper attire includes a lab coat, disposable gloves and protective glasses. Whenever possible, samples should be weighed out in a hood. Any spills that occur during this process must be cleaned up immediately.

4. **STORAGE** - Samples are stored in the designated laboratory areas. It is important that samples for volatiles analysis not be stored in the refrigerator used for drinking water samples.

5. **HAZARDOUS WASTE COORDINATOR** - Unless otherwise specified by the Client, 30 days after the final analytical report is completed the samples are ready for return to the Client or disposal. CTM has assigned a staff member to coordinate the disposal of hazardous waste for the laboratory. The responsibilities include:
   a. Informing CTM staff on where and how the hazardous waste should be disposed. (Refer to Table III).
   b. Contacting the hazardous materials disposal service CTM currently uses:
      Environmental Products and Services
      Box 315
      Syracuse, NY 13209
      (800)262-1012
   c. Signing manifests and sending to designated states.
   d. The files are maintained in the QA officer's office. CTM must meet criteria in the New York State Industrial Hazardous Waste Management Act and RCRA.

6. **DISPOSAL** - The following disposal protocol applies:

- All disposal drums must be labeled with the hazardous waste sticker shown below. The accumulation start date must be recorded on the label.

HAZARDOUS WASTE

FEDERAL LAW PROHIBITS IMPROPER DISPOSAL.

IF FOUND CONTACT THE NEAREST POLICE PUBLIC SAFETY AUTHORITY OR THE U.S. ENVIRONMENTAL PROTECTION AGENCY.

GENERATOR INFORMATION:

NAME _____

ADDRESS _____

CITY _____ STATE _____ ZIP _____

EPA ID NO. _____ EPA WASTE NO. _____

ACCUMULATION START DATE _____ MANIFEST DOCUMENT NO. _____

[_____ _____ _____]

D.O.T. PROPER SHIPPING NAME AND UN OR NA NO. WITH PREFIX

HANDLE WITH CARE!

- All soil/sludge solid samples determined to be hazardous waste based upon analysis or industrial source is placed in a 55 gal. metal drum located in the steel containment box or hazardous waste shed in the rear of the laboratory. All solid chemicals should be left in their original sample container and lab packed in a separate 55 gal. drum using one inch of vermiculite to separate the containers.

- All oil samples determined to be hazardous waste by industrial source or analysis (e.g. PCB>50 pppm) must be discarded in the plastic 55 gallon waste drum contained in the plastic overpack in the laboratory shed.

- All known liquid non-aqueous solvents are disposed of as either halogenated or non-halogenated in separate 30 gallon plastic drums. Once the drums are full they are stored in the laboratory shed prior to pickup.

- All other unknown liquid non-aqueous samples are kept in the original container and packed in a 55 gallon lab pack drum using one inch of vermiculite to separate the containers.

- Aqueous samples such as monitoring well or lagoon samples are normally flushed down the laboratory sink. When aqueous samples contain PPM levels of heavy metals such as mercury or chromium the Colonie Sewage Treatment Plant should be contacted first to obtain approval. In the case where sink disposal is not permitted, samples should be poured into a 55 gallon plastic drum in a plastic overpack for future disposal.

- Once samples have been placed in the appropriate drum the original container can be discarded with the non-hazardous trash.

VIII. REPORTS OF INCIDENTS AND ACCIDENTS

SECTION
1. Introduction
2. Reportable Incidents
3. Serious Accidents
4. Emergency Personnel
5. Investigation

1. **INTRODUCTION**: Reporting of incidents and accidents is required by law. Relatively minor incidents without personal injury or only minor injury should be reported on the laboratory report form. Serious accidents (fatalities and multiple hospitalization injuries) must be reported directly to OSHA.

2. **REPORTABLE INCIDENTS INCLUDE**:
   a. Every accident (injurious or non-injurious).
   b. Accidents resulting in damage or instruments or the building.
   c. Situations or conditions which have the potential for injury, hazard to health, or damage to the property.

3. **SERIOUS ACCIDENTS INCLUDE**:
   a. Fatalities.
   b. Injuries requiring hospitalization.
   c. Injuries involving three or more people.
   d. Property damage exceeding $25.00.
   e. Biologic exposure resulting in lost time or which may involve the public.
   f. Accidents resulting in spillage or radioactive materials.

4. **EMERGENCY PERSONNEL**:
   a. For assistance if a serious accident has occurred...check with switchboard to determine if one of our qualified emergency personnel is in the building. They are:

Paul Male	Ext. 7541	(Paramedic)
Bob Stewart	Ext. 7603	(First Aid Qualified)
David O'Hehir	Ext. 7115/7130	(Paramedic)

   b. Call Town of Colonie Emergency number **783-2833** and inform the switchboard if Paul or Bob are at the scene. The Town will take this into account when they place a call to Boght Road or North Colonie squads.

   Everyone should have a sticker on his/her phone with Town of Colonie fire or ambulance and police department phone numbers. See Safety Officer, Bob Stewart if you need one.

5. **INVESTIGATION**:
   a. Minor incidents reported to the laboratory director with an evaluation and any recommendations.
   b. Major accidents or serious incidents will be investigated by the director in conjunction with the CTM Safety Committee.

IX OSHA CHEMICAL HYGIENE PLAN

1. INTRODUCTION:

All employees must be aware of chemical hazards in the laboratory and the correct measures for working with them to minimize risk to their health. In addition, it is the responsibility of laboratory management to reduce exposure, where possible, and to provide training that will, 1) allow employees to recognize the presence of hazardous chemicals, and 2) enable employee to take specific protective measures during normal usage and in the case of an accident.

2. CHEMICAL HYGIENE OFFICER AND COMMITTEE:

The laboratory QA Officer serves as Chemical Hygiene Officer and Chairperson for the Chemical Hygiene Committee. The Committee is made up of one person from each of the five areas of the lab, organics, metals, wet chemistry, support services and field sampling.

3. STANDARD OPERATING PROCEDURES:

Sections I through VIII contain information on working with hazardous chemicals. Additional information required by OSHA regarding employee information and training is found in this section.

4. EXPOSURE CRITERIA:

If potentially hazardous exposure to a chemical is suspected, a formal request for remedial action should be filed with the Chemical Hygiene Officer. Using the appropriate NIOSH or OSHA method, employee exposure will be monitored. Acceptable exposure will be a level of chemical which is less than half of the lowest published OSHA, NIOSH or ACGIH 8-hour TWA limit. Records of exposure measurement results are kept in the employee's personnel file and by the Chemical Hygiene Officer.

If an event occurs which results in the likelihood of hazardous exposure the employee is encouraged to obtain medical consultation.

If an employee develops signs or symptoms associated with chemical exposure or if monitoring consistently demonstrates levels above the action limit (or in its absence the PEL) the laboratory will cover expenses for examination by a licensed physician.

The following physician is recommended:

William Rogers, M.D.*
Executive Plaza
Albany, New York

* Board certified in Occupational and Internal Medicine.

5. EMPLOYEE INFORMATION:

Each new employee must receive a copy of the CTM Safety Manual. Pages 19 through 27 of the manual contains specific information regarding hazards in each of the five sections of the lab.

6. EMPLOYEE TRAINING:

Each new employee must receive training designed at helping them work safely in their section. Any existing employee who transfers into a new section is treated as a new employee. The training steps are outlined on the CTM Chemical Hygiene Training Form. Training is performed by the Section Manager or the Chemical Hygiene Officer with completion of training documented on the Training Form.

7. ANNUAL SAFETY SEMINAR:

CTM holds a safety seminar for all of the laboratory staff once a year. The seminar is organized by CTM Health and Safety Committee.

The seminar consists of:

a. Lab safety tour of the facility pointing out safety equipment (emergency shower, eyewash stations, location of fire extinguishers and emergency exits, smoke sensors, etc.).
b. Demonstration of fire extinguishers. CTM invites the local fire department (Bought Corners) to conduct this demo. CTM provides a few extinguishers which are used, then recharged immediately after the seminar.
c. Town of Colonie fire inspector (Mr. Mike Rayball) gives a demo on hazardous material placarding and labelling.
d. Demonstration of lab spill control cart.
e. Sign off of all staff after completion.

The seminar historically takes approximately 1 1/2 - 2 hours. The laboratory staff is broken down into manageable group sizes which rotate to the various stations. Input from the lab staff about the seminar is usually received at the general staff meeting following the seminar.

X. CHEMICAL HAZARD ALERT FORMS/MATERIAL SAFETY DATA SHEETS

In this section are Chemical Hazard Alert Forms which are a supplement to the Material Safety Data Sheets. The purpose of these forms is to focus in concise fashion on those chemicals used in each section of the lab which represent the greatest threat to health. Employees will be introduced to the pertinent forms by the Chemical Hygiene Officer whenever they begin working in a new section of the lab.

1. MSDS sheets are located in the metals prep area, in three volumes mounted on the wall.

2. An alphabetized list of all of the materials in the laboratory is located with the sheets.

3. Each sheet is received by the laboratory safety officer and reviewed prior to putting in the volume set. Updated sheets replace older sheets.

4. Each sheet contains material identification, physical/chemical characteristics, fire and explosion hazard data, health hazard data, reactivity data, spill and disposal procedures and special handling information.

5. CTM staff is trained to use MSDS at the annual CTM safety seminar.

CHEMICAL HAZARD ALERT

HAZARD AREA: Glassware prep/organics extraction

CHEMICAL HAZARD: No chrom mix acid cleaning solution

PRECAUTION: Acid cleaning solution is extremely caustic and will cause severe burns if left on the skin and blindness if it contacts the eyes. If contact is made flush affected area immediately with water (10-15 minutes for eyes). If redness occurs consult a physician.

PROTECTION: Proper protective gear includes safety glasses or a complete face shield, acid resistant gloves, lab coat and acid resistant apron.

PREVENTION:

1. Store small amounts in covered container with plastic safety tray.
2. Keep container away from sink basin.
3. Store stock bottle in acid cabinet.
4. Use protective carrier to transport stock bottle.
5. Never add water to cleaner.
6. Never add cleaner to glassware containing visible water.
7. Add cleaner slowly.
8. Always rinse cleaned glassware with large amounts of water.

SPILL CLEANUP:

1. Add TEAM low sodium liquid acid neutralizer to spill. Check pH with pH stick. O.K. if pH 3, or greater.
2. Wet mop spill area to remove liquid. Discard neutralized liquid by flushing down drain.

7/25/90

CHEMICAL HAZARD ALERT

HAZARD AREA: Organics/Organics Extraction

CHEMICAL HAZARD: Methylene Chloride

PRECAUTION: Methylene chloride is a volatile solvent suspected of causing cancer in humans. It can be ignited by a high intensity flame. Toxic gases are formed from contact with hot surfaces. Exposure to vapors can cause headache, dizziness, unconsciousness and death. Prolonged skin contact can cause irritation.

PROTECTION: Always use in a hood. Wear eye protection, resistant gloves and a lab coat.

PREVENTION:

1. Use in hood.
2. Store stock in vented solvent cabinet or vented, secured shed.
3. Always use protective carrier to transport bottles.
4. Store one day working supply in hood in covered container.

SPILL CLEANUP:

1. Wear protective clothing and organic vapor respirator.
2. Throw absorbent material on spill, shovel into plastic garbage bag and place in hazardous waste drum.

9/13/90

CHEMICAL HAZARD ALERT

HAZARD AREA: Organics/Organics Extraction

CHEMICAL HAZARD: Methanol

PRECAUTION: Methanol is a flammable solvent. Avoid open flame, spark or heat. Inhalation of vapors can cause dizziness, weakness, headache, nausea and unconsciousness. Prolonged or repeated skin contact can cause irritation. May be absorbed through skin and can cause CNS and liver damage.

PROTECTION: Always use in a hood. Wear eye protection, resistant gloves and a lab coat.

PREVENTION:

1. Use in hood (explosion proof).
2. Store stock in vented solvent cabinet or vented, secured shed.
3. Always use protective carrier to transport bottles.
4. Store one day working supply in hood in covered container.
5. Do not use near electrical equipment unless it is U.L. rated as explosion proof.

SPILL CLEANUP:

1. Wear protective clothing and organic vapor respirator.
2. Throw absorbent material on spill, shovel into plastic garbage bag and place in hazardous waste drum.

9/17/90

CHEMICAL HAZARD ALERT

HAZARD AREA: Organics/Organics Extraction

CHEMICAL HAZARD: Acetone

PRECAUTION: Acetone is a highly flammable solvent. Avoid open flame, sparks or heat. Inhalation of vapors can cause headache, dizziness, respiratory tract irritation and narcosis. Prolonged or repeated skin contact can cause irritation.

PROTECTION: Always use in a hood. Wear eye protection, resistant gloves and a lab coat.

PREVENTION:

1. Use in hood (explosion proof).
2. Store stock in vented solvent cabinet or vented, secured shed.
3. Always use protective carrier to transport bottles.
4. Store one day working supply in hood in covered container.
5. Do not use near electrical equipment unless it is U.L. rated as explosion proof.

SPILL CLEANUP:

1. Wear protective clothing and organic vapor respirator.
2. Throw absorbent material on spill, shovel into plastic garbage bag and place in hazardous waste drum.

9/14/90

CHEMICAL HAZARD ALERT

HAZARD AREA: Organics/Organics Extraction

CHEMICAL HAZARD: Hexane

PRECAUTION: Hexane is a highly flammable solvent. Avoid open flames, sparks or heat. Inhalation of vapors can cause dizziness and intoxication. Prolonged or repeated skin contact can cause irritation.

PROTECTION: Always use in a hood. Wear eye protection, resistant gloves and a lab coat.

PREVENTION:

1. Use in hood (explosion proof).
2. Store stock in vented flammables solvent cabinet or vented, secured shed.
3. Always use protective carrier to transport bottles.
4. Store one day working supply in hood in covered container.
5. Do not use near electrical equipment unless it is U.L. rated as explosion proof.

SPILL CLEANUP:

1. Wear protective clothing and organic vapor respirator.
2. Throw absorbent material on spill, shovel into plastic garbage bag and place in hazardous waste drum.

9/14/90

CHEMICAL HAZARD ALERT

HAZARD AREA: Wet Chemistry

CHEMICAL HAZARD: Sodium Hydroxide

PRECAUTION: Solutions of sodium hydroxide are caustic and will cause severe burns if left on the skin and blindness if they contact the eyes. If contact is made flush affected area immediately with water (10-15 minutes for eyes). If redness occurs consult a physician. The same applies for sodium hydroxide in solid form.

PROTECTION: Proper protective gear includes safety glasses or a complete face shield, acid resistant gloves, lab coat and acid resistant apron.

PREVENTION:

1. Store solutions in plastic bottles labeled with caustic/corrosive warning.
2. Store stock bottle away from acids.
3. Use protective carrier to transport stock bottle.
4. Never pipet by mouth.

SPILL CLEANUP:

1. Wet mop spill area to remove liquid. Discard liquid by flushing down drain with copious amounts of water.

2/7/92

CHEMICAL HAZARD ALERT

HAZARD AREA: Metals Prep/Wet Chem

CHEMICAL HAZARD: Hydrochloric Acid

PRECAUTION: Hydrochloric acid is extremely caustic and will cause severe burns if left on the skin and blindness if it contacts the eyes. If contact is made flush affected area immediately with water (10-15 minutes for eyes). If redness occurs consult a physician. Breathing vapors can cause inflammation of respiratory tract.

PROTECTION: Proper protective gear includes safety glasses or a complete face shield, acid resistant gloves, lab coat and acid resistant apron.

PREVENTION:

1. Store small amounts in covered container with plastic safety tray away from combustible materials such as paper or cloth.
2. Keep container away from sink basin.
3. Store stock bottle in acid cabinet.
4. Use protective carrier to transport stock bottle.
5. Never add water to acid.
6. Never pipet by mouth.

SPILL CLEANUP:

1. Add TEAM low sodium liquid acid neutralizer to spill. Check pH with pH stick. O.K. if pH 3, or greater.
2. Wet mop spill area to remove liquid. Discard neutralized liquid by flushing down drain.

9/14/90

CHEMICAL HAZARD ALERT

HAZARD AREA: Metals Prep/Wet Chem

CHEMICAL HAZARD: Sulfuric Acid

PRECAUTION: Sulfuric Acid is extremely caustic and will cause severe burns if left on the skin and blindness if it contacts the eyes. If contact is made flush affected area immediately with water (10-15 minutes for eyes). If redness occurs consult a physician. Inhalation of fumes can cause lung damage.

PROTECTION: Proper protective gear includes safety glasses or a complete face shield, acid resistant gloves, lab coat and acid resistant apron.

PREVENTION:

1. Store small amounts in covered container with plastic safety tray.
2. Keep container away from sink basin.
3. Store stock bottle in acid cabinet.
4. Use protective carrier to transport stock bottle.
5. Never add water to acid.
6. Never pipet by mouth.
7. Store solution in bottles with caustic/corrosive warning.

SPILL CLEANUP:

1. Add TEAM low sodium liquid acid neutralizer to spill. Check pH with pH stick. O.K. if pH 3, or greater.
2. Wet mop spill area to remove liquid. Discard neutralized liquid by flushing down drain.

9/17/90

CHEMICAL HAZARD ALERT

HAZARD AREA: Metals Prep/Wet Chem

CHEMICAL HAZARD: Nitric Acid

PRECAUTION: Nitric Acid is extremely caustic and will cause severe burns if left on the skin and blindness if it contacts the eyes. If contact is made flush affected area immediately with water (10-15 minutes for eyes). If redness occurs consult a physician. It is a strong oxidizer and can cause a tire if contact is made with combustible materials. Inhalation of fumes can cause lung damage.

PROTECTION: Proper protective gear includes safety glasses or a complete face shield, acid resistant gloves, lab coat and acid resistant apron.

PREVENTION:

1. Store small amounts in covered container with plastic safety tray away from combustible materials such as paper or cloth.
2. Keep container away from sink basin.
3. Store stock bottle in acid cabinet.
4. Use protective carrier to transport stock bottle.
5. Never add water to acid.
6. Never pipet by mouth.
7. Store solutions in bottles with caustic/corrosive warning.

SPILL CLEANUP:

1. Add TEAM low sodium liquid acid neutralizer to spill. Check pH with pH stick. O.K. if pH 3, or greater.
2. Wet mop spill area to remove liquid. Discard neutralized liquid by flushing down drain.

9/17/90

XI. CTM SAFETY COMMITTEE

The Safety Committee consists of representatives of each section of the laboratory. The following areas are represented: Organics, Metals, Wet Chemistry, Metals Prep, Organics Prep, Office, Field and Safety Officer.

Purpose: To meet monthly and discuss safety and health issues and concerns in the laboratory. To promote safe working practices in all areas of the laboratory. Conduct monthly health and safety audits in the laboratory.

Meetings: Minutes are recorded at each meeting by the designated secretary of the committee. The minutes will be kept in a binder by the Safety Officer. The minutes are available for review by all CTM staff.

Audits: An audit form (check list) is included in this manual. (Refer to Table I). Once a month two members of the CTM Safety Committee will perform an inspection of the laboratory for health and safety compliance. The completed forms will be available for review by the CTM staff. Violations and concerns will be noted on the checklist. Corrective action requests will be submitted to each section and each section will be responsible to make the appropriate changes. Follow-up audit by the Safety Officer will address previous violations.

XII. EMERGENCY RESPONSE PLAN

EMERGENCY ESCAPE PROCEDURES

1. Escape route maps are located in each area of the laboratory. Each map shows a shaded area indicating location and an arrow indicating primary exit. An example map is attached.

2. To prompt evacuation in an emergency situation, the closest pull alarm to the emergency must be pulled. The safety committee member (see No. 6) for the section will have the responsibility to make sure this is accomplished.

   Criteria for pulling the alarm:
   a. An uncontrolled release of hazardous chemicals occurs in the laboratory. Any staff member who encounters this situation may pull the alarm.
   b. An evacuation drill. The Lab Safety Officer pulls the alarm to prompt evacuation.

3. All people in the building must evacuate via primary escape routes or closest exits. The staff will proceed to the cul-de-sac in front of Building 50. The group supervisors will take a head count of their staff.

4. The office receptionist must remove the visitor sign-in list. Visitors must be accounted for by staff members that they are visiting.

5. In the event of a fire, the Material Safety Data Sheets (MSDS) will be removed from the building. Due to the location of the sheets (metal prep area) the section Safety Committee member and section supervisor are responsible for removal of these manuals.

6. Safety Committee members:

Peter Cahill	(Organics)
Prince Knight	(Office)
Jim Farrar	(Field)
David O'Hehir	(Metals & Organics Prep/Lab Safety Officer)

REPORTING EMERGENCIES

1. The pull alarm rings internally and signals directly to COMSEC Security (800 - 955-0810). They will contact the fire department and emergency units unless we call them and cancel the alert. The primary staff member to notify COMSEC is the Lab Safety Officer. The backup will be the safety committee member in the section of the emergency.

2. For assistance in a serious accident the following company employees may be contacted:

David O'Hehir	Ext. 7130/7115	(Paramedic) "In-house"
Paul Male	Ext. 7541	(Paramedic)
Bob Stewart	Ext. 7603	(First Aid Qualified)

3. Emergency telephone numbers:

COMSEC Security	(800) 955-0810
Fire Department	783-2833
Police Department	783-2811
Ambulance	783-2833

TRAINING

1. All lab staff will participate in routine evacuation drills (minimum annual).

2. All lab staff will receive a Lab Safety Manual.

3. A written copy of this plan will be on file with the Lab Safety Officer and made available for employee review.

TABLE I

MONTHLY HEALTH AND SAFETY AUDIT OF LABORATORY

CTM Analytical Laboratories

Purpose: Once a month two members of the CTM Safety Committee will perform an inspection of the laboratory for health and safety compliance. Violations and concerns will be noted on the checklist. corrective action requests will be submitted to each section and each section will be responsible to make the appropriate changes. Follow up audits will address previous violations.

Date of Audit:
Names of Auditors:

WET CHEMISTRY AREA/ORGANIC EXTRACTION AREA

1)	Ventilation Hoods Flows are acceptable?	(Y/N)
2)	Monthly safety checks done in Wet Chem checkoff book? (eyewash, emergency showers, blanket)	(Y/N)
3)	Are electrical connections safe?	(Y/N)
4)	Is the No-chromix acid solution covered and in a safe place on the glass washing bench?	(Y/N)
5)	Are any reagents noticeably stored in unsafe areas (i.e. conc. acids next to conc. bases)?	(Y/N)
6)	Are walkways obstructed?	(Y/N)
7)	Are exit doors obstructed?	(Y/N)
8)	Are lab personnel wearing required protective wear (lab coats, safety glasses)?	(Y/N)
9)	Are lab personnel eating or drinking in work areas?	(Y/N)
10)	Is good housekeeping being practiced?	(Y/N)
11)	Are items piled on top of cabinets, incubators, etc.?	(Y/N)
12)	Are pipets or other glassware placed unsafely in working areas (i.e. sticking out of beakers, bottles)?	(Y/N)
13)	Is anyone mouth pipetting?	(Y/N)

Comments:

METALS PREP AND ANALYSIS AREA

1)	Are ventilation hood flows acceptable?	(Y/N)
2)	Are electrical connections safe?	(Y/N)
3)	Are any reagents stored in unsafe areas?	(Y/N)
4)	Are walkways obstructed?	(Y/N)
5)	Are exit doors obstructed?	(Y/N)
6)	Are lab personnel wearing required protective wear (lab coats, safety glasses)?	(Y/N)

7) Are lab personnel eating or drinking in work areas? (Y/N)
8) Is good housekeeping being practiced? (Y/N)
9) Are compressed gas cylinders secure? (Y/N)
10) Are items piled on top of cabinets, equipment, etc.? (Y/N)
11) Are pipets or other glassware stored unsafely in work areas? (Y/N)
12) Is anyone mouth pipetting? (Y/N)

Comments:

ORGANIC ANALYTICAL SECTIONS

1) Are electrical connections safe? (Y/N)
2) Are reagents stored in unsafe areas? (Y/N)
3) Are walkways obstructed? (Y/N)
4) Are exit areas obstructed? (Y/N)
5) Are lab personnel in work areas wearing safety glasses? (Y/N)
6) Are lab personnel eating or drinking in work areas? (Y/N)
7) Is good housekeeping being practiced? (Y/N)

Comments:

OFFICE SECTIONS

1) Are electrical connections safe? (Y/N)
2) Are walkways obstructed? (Y/N)
3) Are exit areas obstructed? (Y/N)
4) Is good housekeeping being practiced? (Y/N)

Comments:

STORAGE SHEDS

1) Is chemical storage shed properly ventilated? (Y/N)
2) Are acids and bases stored in separate areas? (Y/N)
3) Is shed organized? (Y/N)
4) Are gas cylinders secure in shed? (Y/N)
5) Are valve covers on cylinders? (Y/N)

Comments:

TCLP/LIQUID/LIQUID ROOM

1) Are electrical connections safe? (Y/N)
2) Is good housekeeping being practices? (Y/N)
3) Are reagents stored safely? (Y/N)
4) Is the TCLP apparatus secure? (Y/N)
5) Is the Liquid/Liquid apparatus secured to the wall? (Y/N)
6) Are patio blocks being used under the heating mantles? (Y/N)

Comments:

BOTTLE PREP AREA/SAMPLE LOG-IN

1) Are walkways obstructed? (Y/N)
2) Is good housekeeping being practiced? (Y/N)
3) Are electrical connections safe? (Y/N)
4) Are preservative reagents stored in a safe location? (Y/N)
5) Is area free of food and drink? (Y/N)

Comments:

SAMPLING OFFICE

1) Is good housekeeping being practiced? (Y/N)
2) Are walkways obstructed? (Y/N)
3) Are samples improperly stored in office? (Y/N)

Comments:

SPILL RESPONSE CART INVENTORY

1) Respirator with cartridges (Acid Mists and Organic Vapors)
2) Kitty Litter
3) Gloves
4) Booties
5) Polysorbs
6) Mercury Indicator
7) Mercury Absorbant
8) Acid Neutralizer

FIRST AID KIT INVENTORY

1) Bandaids
2) Plastic Strips
3) Burn Spray
4) Triangular Bandage
5) Non-Stick Pads
6) Instant Cold Pack
7) Burn Cream
8) Rolled Gauze

FIRST AID DUFFEL BAG INVENTORY

1) Burn Blanket
2) Combine Dressings
3) Wool Blanket
4) Shears
5) Conforming Gauze Bandage
6) Laerdal Pocket Mask

Need to order:

_____

_____

_____

_____

_____

TABLE III

SAMPLE DISPOSAL: SOIL/SOLIDS

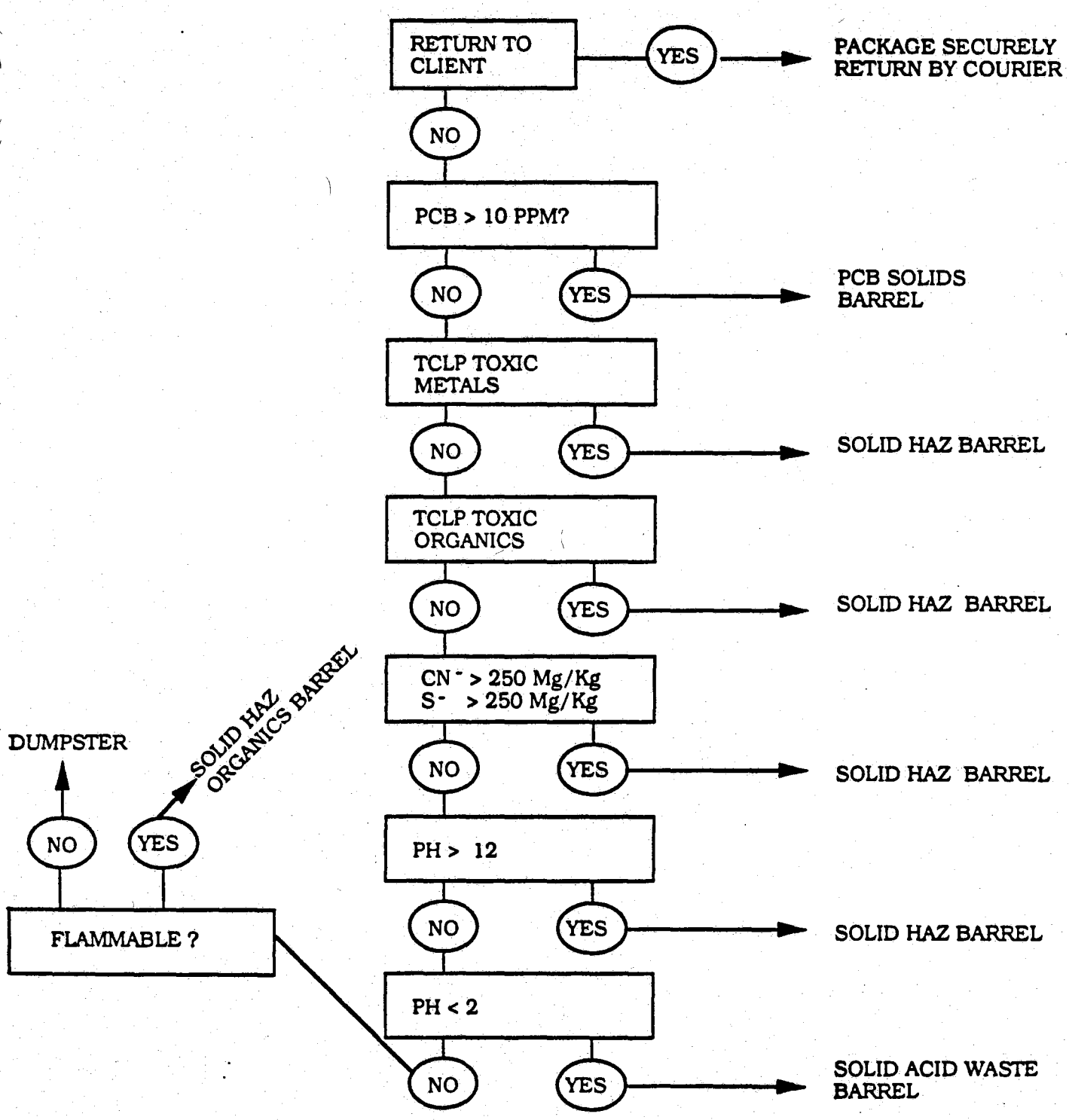

SAMPLE DISPOSAL: NON-AQUEOUS LIQUIDS

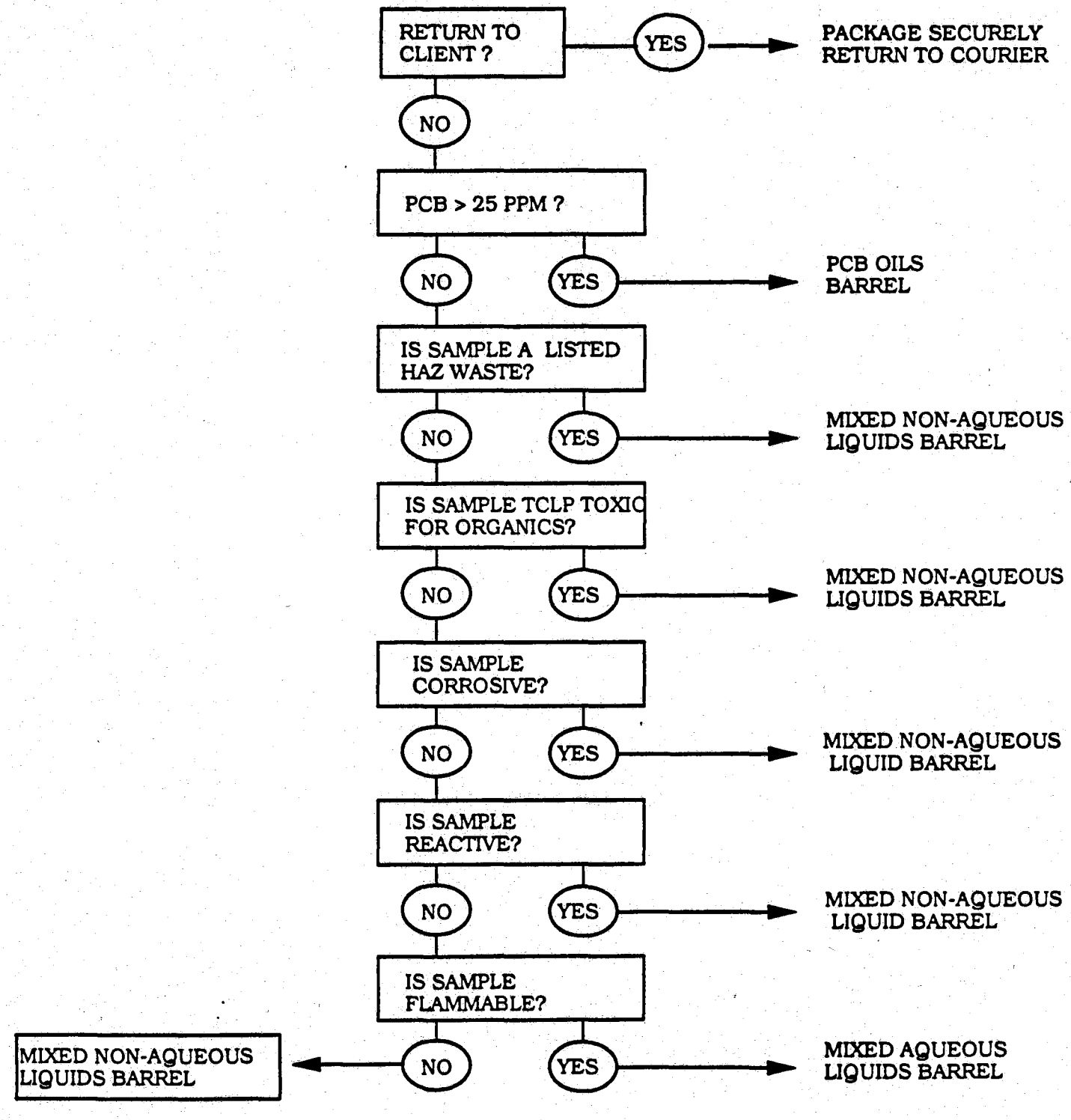

SAMPLE DISPOSAL: WATER

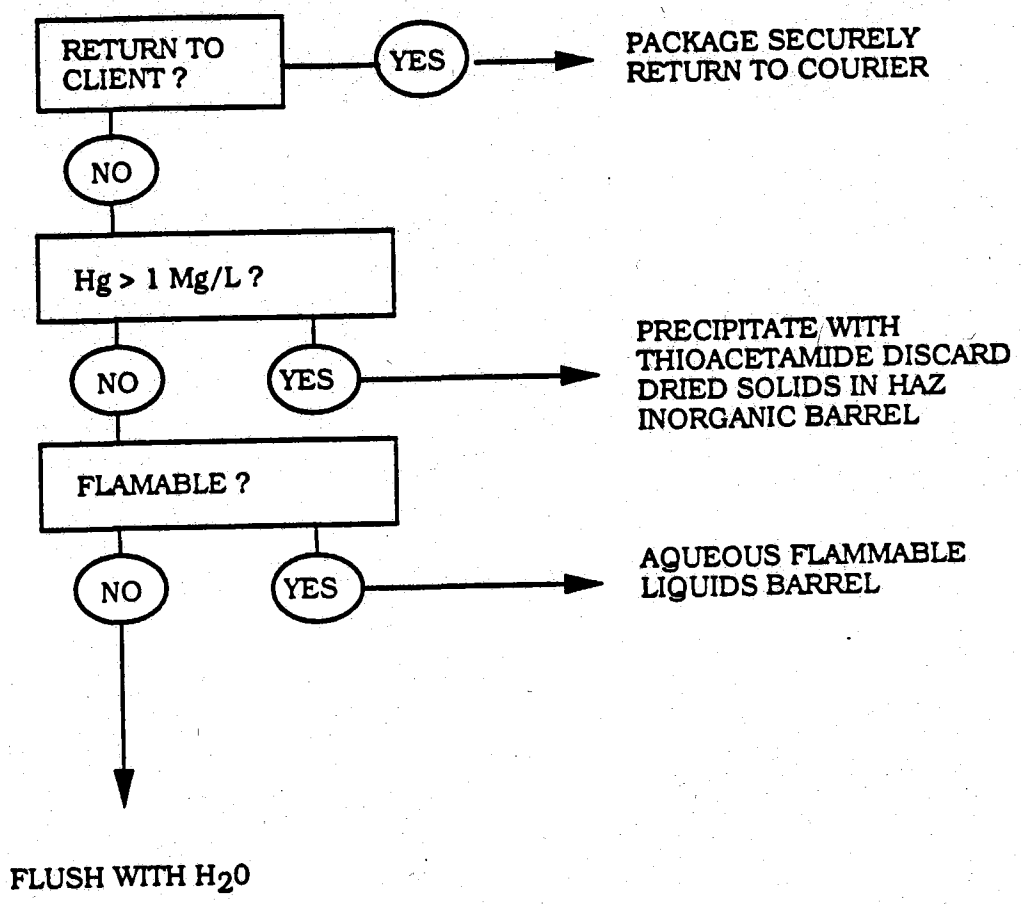

SAMPLING QUALITY CONTROL PROCEDURES

Quality Assurance begins in the field. The importance of correct sampling procedures should be a priority concern of any laboratory. CTM has a fully trained and highly experienced sampling team. Their objectives for quality control includes the following:

1. Sound Sampling Techniques and Use of Proper Equipment

All regulatory agencies (i.e. EPA, NIOSH) provide detailed, and many times, stringent, policies to follow concerning sampling procedures. The CTM sampling team adheres to these regulations to insure that the laboratory's analytical results represent the actual sample composition. These methods include:

1. Use of proper containers and preservation to retard chemical and biological changes of the sample;

2. Proper sample container filling procedures and sample transport to the laboratory;

3. Design of a sampling plan to insure that representative samples will be taken;

4. Learning the limitations/functions of sampling equipment (i.e. composite sampler, air pump, bailer) to insure proper sampling techniques.

2. Contaminant-Free Equipment

Cross contamination of a sample from any source is to be avoided. To this end, all equipment used in sampling must be clean and free from the residue of any previous sample and/or kept from any surface that could be a possible source of contamination. This is accomplished by:

1. Cleaning all non-dedicated sampling equipment prior to being reused, documented by cleaning lot number and bailer blank;

2. While in the field, washing sampling equipment between each sampling point;

3. Using dedicated bailers, tubing and other sampling equipment for specific, known projects.

3. Proper Monitoring Techniques

To insure that contamination of samples has not occured and that the integrity of a sample is intact, the samplers use the following techniques:

1. A field blank is taken mid-point of the sampling sequence or after a particularly contaminated sampling point to monitor possible contamination of sampling equipment.

2. A transport blank prepared with organic-free deionized water is carried during the entire sampling event to monitor possible contamination of volatile compounds from containers or during transport.

3. Duplicate samples are taken in sequential order to monitor analytical precision and sampling technique.

4. Documentation

Proper chain of custody of samples is maintained by the CTM sampling team through the use of:

1. Sample Labeling - Each sample container is prepared with a CTM container label. The information noted on this label includes client/project name, sampling point ID, site location, person sampling, date and time, sample matrix, preservation used and sample type (grab or composite)

2. Custody Seals - If the project plan (i.e. EPA CLP or NYSDEC ASP) calls for strict monitoring, a custody seal is placed on the sample container over the cap to protect the sample from tampering.

3. Chain of Custody Record - The chain of custody (Figure 3) is also filled out at the time of sampling, recording the same information as the sample labels. It is kept with the samples during transport and relinquished to the laboratory at the same time as the samples. The sampler signs the chain of custody at the time of release to lab personnel.

4. Field Notes - Detailed notes are kept in a CTM Field Notebook. This book is used to describe pertinent informatin such as weather condition, sampling conditions, sampling equipment setup and personnel involved. When properly used, this book provides important corroborative information.

5. Safety

Once a sampler knows correct sampling procedures and has a sampling plan, he/she must incorporate safety precautions into the sampling process. The CTM sampling team accomplishes this by:

1. Wearing the proper clothing - hard hats, disposable gloves, respirators, etc... as necessary.

2. Receiving the proper training - All CTM samplers attend mandatory CTM laboratory safety training programs, use the Laboratory Safety Manual (Appendix B) and complete the 40 hour Health and Safety Training for Hazardous Waste Operations required by OSHA.

APPENDIX D

PROPOSED FEDERAL ACTION LEVELS AND STATE OF MAINE MAXIMUM EXPOSURE GUIDELINES

Environmental Toxicology Program

Bureau of Health

SUMMARY OF STATE AND FEDERAL DRINKING WATER GUIDELINES

(Revised 9/92)

(parts per billion)

A. INORGANICS

	HA	MEG	MCL	PROPOSED MCL
Aluminum	-	1430	50 to 200#	-
Antimony	-	-	-	5-10
Arsenic	- A	-	50	-
Asbestos	- A	-	7 E+6 fibers/l	-
Barium	1500	1500	2000	-
Beryllium	- B	-	-	1
Boron	620	620	-	-
Bromide	-	660	-	-
Cadmium	5	5	5	-
Chloramine	-	166	-	-
Chlorate	-	7	-	-
Chloride	-	-	250,000#	-
Chlorine dioxide	-	60	-	-
Chlorite	-	7	-	-
Chromium	120	100	100	-
Copper	-	-	1000#	1300*
Cyanide	154	154	-	200
Fluoride	-	2400	4000(2000#)	-
Iodide	-	340	-	-
Iron	-	-	300#	-
Lead	-	20	15*	-
Manganese	-	200	50#	-
Mercury	1	2	2	-
Molybdenum	35(draft)	-	-	-
Nickel	150	150	-	100
Nitrate	-	10,000	10,000(as N)	-
Nitrite	-	1000	1000(as N)	-
Selenium	-	10	50	-
Silver	-	50	100#	-
Strontium	-	2400	-	-
Sulfate	-	-	250,000#	4-500,000
Thallium	0.4	0.4	-	1-2
Zinc	-	-	5000#	-

#Secondary MCL, based on taste, odor or color.
*Action level.

B. PESTICIDES

	HA		MEG	MCL	PROPOSED MCL
Acifluorfen	(10)	B	10	-	-
Alachlor	(6)	B	2	2	-
Aldicarb	1		2	3	-
Aldicarb sulfone	1		-	2	-
Aldicarb sulfoxide	1		-	4	-
Ametryn	60		60	-	-
Amiben (Chloramben)	105		105	-	-
Ammonium Sulfamate	1500		1500	-	-
Atrazine	3	C	3	3	-
Azinphos-Methyl	-		25	-	-
Baygon	3	C	3	-	-
Bentazon	17.5		17.5	-	-
Bromacil	90	C	25	-	-
Butachlor	-		20	-	-
Butylate	360		360	-	-
Captan	-		100	-	-
Carbaryl	700		164	-	-
Carbofuran	36		40	40	-
Carboxin	700		700	-	-
Chlordane	(.27)	B	0.27	2	-
Chlorothalonil	(15)	B	15		
Cyanazine	1	C	1	-	-
2,4-D	70		70	70	-
Dacthal	3500		3500	-	-
Dalapon	200		200	-	200
DDT	-		0.83	-	-
Diazinon	0.63		0.63	-	-
1,2-Dibromo-3-chloropropane (DBCP)	(.25)	B	0.2	0.2	-
Dicamba	200		200	-	-
1,2-Dichloropropane	(5.6)	B	5	5	-
1,3-Dichloropropene	(2)	B	2	-	-
Dieldrin	(.02)	B	0.02	-	-
Dimethrin	2100		2100	-	-
Dinitrophenol	-		31	-	-
Dinoseb	7		2	-	7
Diphenamid	200		200	-	-
Diquat	20		20	-	20
Disulfoton (Disystox)	0.3		0.3	-	-
Diuron	14		14	-	-
Endothall	140		140	-	100
Endrin	2		2	-	2
Ethylene dibromide (EDB)	(.005)	B	0.005	0.05	-
Ethylenethiourea (ETU)	(2.4)	B	3	-	-
Fenamiphos	1.8		1.8	-	-
Fluometuron	90		90	-	-
Folpet	-		320	-	-
Fonofos	14		14	-	-

B. PESTICIDES (cont.)

	HA		MEG	MCL	PROPOSED MCL
Glyphosate	700		700	-	700
Heptachlor	(.08)	B	0.08	0.4	-
Heptachlor Epoxide	(.04)	B	0.04	0.2	-
Hexachlorophene	-		2	-	-
Hexazinone	210		210	-	-
Lindane (BHC)	0.2	C	0.2	0.2	-
Malathion	-		40	-	-
Maleic Hydrazide	3500		3500	-	-
Maneb/Mancozeb/Zineb	-		10	-	-
MCPA	4		2.5	-	-
Methomyl	200		50	-	-
Methoxychlor	340		100	40	-
Methyl Parathion	2		2	-	-
Metolachlor	100	C	100	-	-
Metribuzin	175		175	-	-
Oxamyl	175		175	-	200
PCNB	-		71	-	-
Paraquat	30		30	-	-
Parathion	-		8.6	-	-
Pentachlorophenol	(3)	B	1	1	-
Phorate	-		0.2	-	-
Picloram	490		300	-	500
Prometon	100		100	-	-
Pronamide	50	C	50	-	-
Propachlor	92		92	-	-
Propanil	-		40	-	-
Propazine	14	C	14	-	-
Propham	120		120	-	-
Resorcinol	-		140	-	-
Rotenone	-		4	-	-
Simazine	4	C	4	-	4
2,4,5-T	70		70	-	-
Tebuthiuron	500		500	-	-
Terbacil	90		90	-	-
Terbufos	0.9		0.9	-	-
Thiram	-		10	-	-
Toxaphene	(0.3)	B	0.3	3	-
2,4,5-TP (Silvex)	52		1	50	-
2,4,6-Tricholorophenol	-		700	-	-
Trifluralin	2	C	2	-	-
Ziram/Ferbam	-		25	-	-

C. ORGANICS (halogenated)

	HA		MEG	MCL	PROPOSED MCL
Bis (2-chloroethyl) ether	-		8.3	-	-
Bis (2-chloroisopropyl) ether	250		250	-	-
Bromochloromethane	92		92	-	-
Bromomethane	10		10	-	-
Carbon Tetrachloride	(2.7)	B	2.7	5	-
Chloromethane	3	C	3	-	-
o,p-Chlorotoluene	140		140	-	-
o,m-Dichlorobenzene	620		85	600	-
p-Dichlorobenzene	75	C	27	75	-
Dichlorodifluoromethane	1050		1050	-	-
1,1-Dichloroethane	-		5	- 5	-
1,2-Dichloroethane	(3.8)	B	5	5	-
1,1-Dichloroethylene	7	C	7	7	-
1,2-Dichloroethylene, cis	70		70	70	-
1,2-Dichloroethylene, trans	70		70	100	-
Dichloromethane	(48)	B	48	-	5
2,4-Dichlorophenol	-		20	-	-
1,2-Dichloropropane	(5)	B	5	5	-
Epichlorohydrin	(35.4)	B	35	treatment technique	
Hexachlorobenzene	(0.2)	B	0.2	-	1
Hexachlorobutadiene	1	C	1	-	-
Hexachlorocyclopentadiene	-		50	-	50
Hexachloroethane	1	C	1	-	-
Monochlorobenzene	300		47	100	-
PCBs	-	B	0.05	0.5	-
2,3,7,8-TCDD	(2.2 E-6)	B	2.2 E-6	-	5 E-5
1,1,1,2-Tetrachloroethane	70	C	70	-	-
Tetrachloroethylene	(7)	B	3	5	-
1,2,4-Trichlorobenzene	70		70	-	70
1,3,5-Trichlorobenzene	40		40	-	-
1,1,1-Trichloroethane	200		200	200	-
1,1,2-Trichloroethane	3	C	3	-	5
Trichloroethylene	(28)	B	5	5	-
Trichlorofluoromethane	2400		2300	-	-
1,2,3-Trichloropropane	40		40	-	-
Trihalomethanes (total)	-		100	100	-
Tris (1,3-dichloroisopropyl) phosphate	-		14	-	-
Vinyl Chloride	(0.15)	A	0.15	2	-

D. ORGANICS (non-halogenated)

	HA		MEG	MCL	PROPOSED MCL
Acrylamide	(.1)	B	0.1	treatment	technique
Benz(a)anthracene	-	B	-	-	0.1
Benzene	(7)	A	5	5	-
Benzo(a)pyrene	-	B	-	-	0.2
Benzo(b)fluoranthene	-	B	-	-	0.2
Benzo(k)fluoranthene	-	B	-	-	0.2
Butyl benzyl phthalate	-	C	-	-	100
Chrysene	-	B	-	-	0.2
Dibenz(a,h)anthracene	-	B	-	-	0.3
Di-n-butyl phthalate	-		220	-	-
Di-(2-ethylhexyl)adipate	400	C	400	-	400
Di-(2-ethylhexyl)phthalate	-	B	25	-	4
N,N-Dimethylformamide (DMF)	-		350	-	-
1,3-Dinitrobenzene	1		1	-	-
p-Dioxane	(70)	B	70	-	-
Ethyl Benzene	680		700	700	-
Ethylene glycol	7000		5500	-	-
Formaldehyde	-		30	-	-
Fuel Oil	-		50	-	-
Gasoline	-		50	-	-
n-Hexane	-		4000	-	-
Indeno(1,2,3-c,d)pyrene	-	B	-	-	0.4
Isopherone	140	C	140	-	-
Kerosene	-		50	-	-
Methyl ethyl ketone	170		170	-	-
Methyl methacrylate	-		200	-	-
Methyl-t-butyl ether	-		50	-	-
Naphthalene	25		25	-	-
Nitrobenzene	-		1.4	-	-
Nitroguanidine	700		700	-	-
Nitrophenol	-		83	-	-
Polynuclear Aromatic Hydrocarbons (cPAHs)	-	B	0.03	-	-
Styrene	140	C	5	100	-
Toluene	1400		1400	1000	-
Trinitroglycerol	5		5	-	-
Trinitrophenol	-		57	-	-
Trinitrotoluene	2	C	2	-	-
Xylenes	10,000		600	10,000	-

HA = US EPA Lifetime Health Advisory.
MEG = State of Maine Maximum Exposure Guideline.
MCL = US EPA Maximum Contaminant Level.
A = Known Human Carcinogen. No Lifetime HA recommended. Number in parentheses represents 1 in 100,000 lifetime cancer risk.
B = Probable Human Carcinogen. No Lifetime HA recommended. Number in parentheses represents 1 in 100,000 lifetime cancer risk.
C = Possible Human Carcinogen.

APPENDIX E

CONDENSED HEALTH AND SAFETY PLAN

CONDENSED HEALTH AND SAFETY PLAN FOR IWTP GROUNDWATER MONITORING PLAN PORTSMOUTH NAVAL SHIPYARD KITTERY, MAINE (PAGE 1 OF 3)

INTRODUCTION: This Health and Safety Plan presents the potential hazards, personal protective equipment required and emergency contact information associated with the scope of work to be conducted at the Industrial Waste Treatment Plant (Building 298) at the Portsmouth Naval Shipyard.

SCOPE OF WORK: Monitoring well installations, soil and groundwater sampling.

TRAINING: OSHA 1910.120, 40 hours required for all personnel.

KNOWN CONTAMINANTS: Heavy metals, PCBs and trace organics.

PERSONAL PROTECTIVE EQUIPMENT:

1. Chemical resistant gloves to prevent dermal contact with potentially contaminated soil and water.
2. Use of overboots and other disposable clothing is optional.
3. Hard hats are mandatory for all drilling activities.
4. Respiratory: Air purifying respirators with organic vapor cartridge is required to be at hand. If levels greater than 10 ppm total VOCs are measured on PID meter in breathing zone above background levels, upgrade to use of air purifying respirator or suspend work and move out of effected area.

EXPLOSIVE HAZARD: There appears to be no potential for fire or explosion at this site. However, if conditions change as determined by the site Health and Safety Officer, work will cease and the situation evaluated.

COMMUNICATIONS: Telephone in IWTP, Building 298.

MONITORING EQUIPMENT: Photoionization Detector, Photovac Microtip 1000, 10.6 eV lamp, or equal.

CONDENSED
HEALTH AND SAFETY PLAN
FOR IWTP GROUNDWATER MONITORING PLAN
PORTSMOUTH NAVAL SHIPYARD
KITTERY, MAINE
(PAGE 2 OF 3)

EMERGENCY INFORMATION:

Portsmouth Naval Shipyard Coordinator:	Timothy Dunn, Code 121.1	(207) 438-3831
	Bob Burley, Code 121.4	(207) 438-1756
Northern Division Project Coordinator:	Lien-Huong Nguyen	(215) 595-0567
Consultant/Contractor Project Manager:	Elizabeth W. Rovers, P.E. C.T. Male Associates, P.C. Latham, NY 12110	(518) 786-7492
Health and Safety Officer:	Brian King, CIH	(518) 786-7492
	C.T. Male Associates, P.C.	(315) 458-6498

EMERGENCY PHONE NUMBERS:

Injury:	Portsmouth Regional Hospital Borthwick Avenue Ext. Portsmouth, NH (Directions Included)	(603) 433-4042
	Shipyard Emergency Room	(207) 438-2555 or Ext. 2555
Fire Dept. or Ambulance:	Shipyard	(207) 438-2333 or Ext. 2333

CONDENSED
HEALTH AND SAFETY PLAN
FOR IWTP GROUNDWATER MONITORING PLAN
PORTSMOUTH NAVAL SHIPYARD
KITTERY, MAINE

Police:	Shipyard	(207) 438-2444 or Ext. 2444
Poison Control Center:	Maine	1-800-442-6305
	New Hampshire	1-800-562-8236
National Response Center:		1-800-424-8802
MEDEP Representative:	Peter Blanchard	(207) 287-2651

HOSPITAL:

Portsmouth Regional Hospital	(603) 433-4042

Directions:

Exit Shipyard through Gate #1. At lights, go straight on Walker Street. At second light, go straight until road ends at Route 1 Bypass. Enter underpass rotary on left side. Go under Route 1 Bypass and loop onto Route 1 Bypass South. Go over bridge and continue straight to traffic circle. At traffic circle go around to exit right 270° (3/4) from entrance to traffic circle. At first set of lights, go straight. At second set of lights, turn right on Borthwick Avenue Extension. Follow Borthwick Avenue Extension. Follow Borthwick Avenue Extension 1/2 mile to 1 mile. Look for Portsmouth Regional Hospital on right hand side.

APPENDIX F

GROUNDWATER SAMPLING HEALTH AND SAFETY PLAN

GROUNDWATER SAMPLING
HEALTH AND SAFETY PLAN
INDUSTRIAL WASTE TREATMENT PLANT
PORTSMOUTH NAVAL SHIPYARD
KITTERY, MAINE
(PAGE 1 OF 3)

INTRODUCTION: This Health and Safety Plan presents the potential hazards, personal protective equipment required and emergency contact information associated with the scope of work to be conducted at the Industrial Waste Treatment Plant (Building 298) at the Portsmouth Naval Shipyard.

SCOPE OF WORK: Groundwater sampling.

TRAINING: OSHA 1910.120, 40 hours required for all personnel.

KNOWN CONTAMINANTS: Metals, PCBs and trace organics.

PERSONAL PROTECTIVE EQUIPMENT:

1. Chemical resistant gloves to prevent dermal contact with potentially contaminated groundwater.
2. Use of overboots and other disposable clothing is optional.
3. Respiratory - none required.

MONITORING EQUIPMENT: Photoionization Detector, Photovac Microtip 1000, 10.6 eV lamp, or equal is optional.

COMMUNICATIONS: Telephone in IWTP, Building 298.

EMERGENCY INFORMATION:

Portsmouth Naval Shipyard Coordinator:	Timothy Dunn, Code 121.1	(207) 438-3831
	Bob Burley, Code 121.4	(207) 438-1756

C.T. MALE ASSOCIATES, P.C.

GROUNDWATER SAMPLING
HEALTH AND SAFETY PLAN
INDUSTRIAL WASTE TREATMENT PLANT
PORTSMOUTH NAVAL SHIPYARD
KITTERY, MAINE
(PAGE 2 OF 3)

Northern Division Project Coordinator:	Lien-Huong Nguyen	(215) 595-0567
Consultant/Contractor Project Manager:	_____	_____
	_____	
	_____	
Health and Safety Officer:	_____	_____
	_____	_____

EMERGENCY PHONE NUMBERS:

Injury:	Portsmouth Regional Hospital Borthwick Avenue Ext. Portsmouth, NH (Directions Included)	(603) 433-4042
	Shipyard Emergency Room	(207) 438-2555 or Ext. 2555
Fire Dept. or Ambulance:	Shipyard	(207) 438-2333 or Ext. 2333
Police:	Shipyard	(207) 438-2444 or Ext. 2444
Poison Control Center:	Maine	1-800-442-6305
	New Hampshire	1-800-562-8236

National Response Center: 1-800-424-8802

MEDEP
Representative: Peter Blanchard (207) 287-2651

HOSPITAL:

Portsmouth Regional Hospital (603) 433-4042

Directions:

Exit Shipyard through Gate #1. At lights, go straight on Walker Street. At second light, go straight until road ends at Route 1 Bypass. Enter underpass rotary on left side. Go under Route 1 Bypass and loop onto Route 1 Bypass South. Go over bridge and continue straight to traffic circle. At traffic circle go around to exit right 270° (3/4) from entrance to traffic circle. At first set of lights, go straight. At second set of lights, turn right on Borthwick Avenue Extension. Follow Borthwick Avenue Extension. Follow Borthwick Avenue Extension 1/2 mile to 1 mile. Look for Portsmouth Regional Hospital on right hand side.