N60138.AR.003162
FISC WILLIAMSBURG
5090.3a

FINAL TIER II SAMPLING AND ANALYSIS PLAN AREA OF CONCERN 2 (AOC 2) DEXTROSE DUMP SITE INSPECTION SUPPLEMENTAL SOIL SAMPLE COLLECTION CHEATHAM ANNEZ FISC WILLIAMSBURG VA

5/1/2014

CH2M HILL

1 Title and Approval Page

Final

Tier II Sampling and Analysis Plan
AOC 2 – Dextrose Dump
Site Inspection Supplemental Soil Sample Collection

Naval Weapons Station Yorktown Cheatham Annex
Williamsburg, Virginia

Contract Task Order 056

May 2014

Prepared for:

Department of the Navy
Naval Facilities Engineering Command
Mid-Atlantic

Under the

NAVFAC CLEAN 1000 Program
Contract N62470-08-D-1000

Prepared by:

CH2MHILL®

This page left intentionally blank

Signature Page

Quality Assurance Approval:

NAVFAC Quality Assurance Officer/Date

Quality Assurance Review:

Douglas Bitterman
CH2M HILL Activity Quality Manager/Date

Other Approvals:

Scott Park
NAVFAC Remedial Project Manager/Date

Gerald Hoover
USEPA Remedial Project Manager/Date

Wade Smith
VDEQ Remedial Project Manager/Date

This page left intentionally blank

Executive Summary

This Site Inspection (SI) Supplemental Sampling and Analysis Plan (SAP) was prepared to conduct supplemental soil sampling at Area of Concern (AOC) 2, the Dextrose Dump, located at Naval Weapons Station (WPNSTA) Yorktown Cheatham Annex (CAX) in Williamsburg, Virginia. This SAP was prepared for the United States Department of the Navy (Navy), Naval Facilities Engineering Command (NAVFAC) Mid-Atlantic, under the Comprehensive Long-term Environmental Action—Navy (CLEAN) 1000 Contract, Contract Task Order 056, for submittal to the Navy, the United States Environmental Protection Agency (USEPA) Region III, and the Virginia Department of Environmental Quality (VDEQ). The Navy, USEPA, and VDEQ work jointly as the CAX Partnering Team. This SAP was written in accordance with the Uniform Federal Policy (UFP) for Quality Assurance Project Plans (QAPP) guidance document (USEPA, 2005) using the modified Tier II format. Approval to prepare a Tier II SAP was provided via an e-mail from Kenneth Bowers of the Navy on August 8, 2013 (**Attachment 1**).

CAX encompasses 2,300 acres east of Williamsburg, between Interstate 64 and the York River on the York-James Peninsula of Virginia (**Figure 1**). CAX is located on the site of the former DuPont Company Penniman Shell Loading Plant (PSLP) facility and is currently used to supply Atlantic Fleet ships and provide recreational opportunities to military and civilian personnel. The former PSLP was used as a powder and shell loading plant during World War I, closed in 1918, and dismantled in the early 1920s. Currently, the majority of CAX is undeveloped and heavily wooded. Surface water features at CAX include Cheatham Pond, Jones Pond, and Penniman Lake, and the York River is adjacent to CAX's northeastern to eastern boundaries.

AOC 2, the Dextrose Dump, is a small (less than 1 acre) wooded site located to the north of Garrison Road, along the southern perimeter of CAX (**Figure 2**). AOC 2 was identified during site visits by the Navy, USEPA, VDEQ, and Baker Environmental, Inc., in late 1997 and early 1998, and consists of several rows of concrete foundation piers that at one time supported a shipping house associated with the PSLP. In May 1998, a routine housekeeping operation was performed at AOC 2 and a total of 470 glass bottles were removed from the ground surface. During the 1998 field investigation, 12 partially buried and empty 55-gallon drums were observed at the ground surface. An investigation conducted in late 1999 and early 2000 removed some of the debris that was encountered during the investigation activities; however, the remainder of the buried debris remains onsite. In 2001, 15 trenches were excavated at AOC 2 to determine the presence or absence of buried respiratory protection cartridges along Deer Pit Road and to obtain additional information concerning materials potentially buried at AOC 2. Based on the types of debris observed during the trenching activities, AOC 2 was separated into three areas: Areas 1a and 1b contain dextrose bottles and minor amounts of debris, Area 2 contains unused respirator cartridges and empty 55-gallon drums, and Area 3 contains military clothing (**Figure 3**).

In 2008, an SI was conducted at AOC 2. Based on the human health and ecological risk evaluations performed as part of the SI, it was concluded that: Exposure to surface soil at AOC 2 may result in unacceptable human health risks associated with arsenic and chromium and ecological risks associated with 4,4'-dichlorodiphenyltrichloroethane (DDT), mercury, and iron (**Figure 5**); exposure to subsurface soil at AOC 2 may result in unacceptable human health risks associated with Aroclor-1260, arsenic, chromium, copper, and thallium and potential unacceptable ecological risk associated with mercury (**Figure 6**); and that no action for groundwater was warranted (CH2M HILL, 2012).

The SI recommended an interim removal action at Area 2 to remove the debris (respirator cartridges and empty 55-gallon drums) and the preparation of a consensus letter, including a risk assessment of the existing

data, to capture the no action determination for groundwater (CH2M HILL, 2012).[1] The removal action would also address the potential ecological risk associated with 4,4'-DDT in surface soil and the human health constituents of potential concern (COPCs) in surface and subsurface soil, except arsenic and chromium, which were found at concentrations exceeding screening criteria outside of Area 2.

Regarding the potentially unacceptable human health risk to arsenic and chromium in the surface and subsurface soil, this risk is based on the assumption that chromium is present in the hexavalent form, which is unlikely. In the trivalent form, neither chromium nor arsenic would be considered human health COPCs. Regarding the potentially unacceptable risk to ecological receptors to mercury in soil, the type of debris at AOC 2 does not appear to be a likely mercury source. In addition, the relatively even distribution of the mercury concentrations across the site puts the historical data in question; therefore, new mercury data are warranted to confirm the historical results. Also, since no soil pH data were available to conduct the SI ecological risk screening, it is uncertain whether iron poses a potential ecological risk.

The overall objective of the SI supplemental soil sample collection is to augment the current SI dataset for the purpose of updating the human health (chromium and arsenic) and ecological (mercury and iron) risk evaluations to determine whether these constituents pose potentially unacceptable risks to human health and the environment, and to determine whether the removal action proposed for Area 2 needs to also address soil "hot spots" outside of Area 2, specifically in Area 1b (**Figure 3**). The general approach for the investigation is as follows:

- Conduct a primary sampling event, which will consist of surface and subsurface soil sample collection in proximity to the historical sample locations outside of Area 2. Specifically, surface and subsurface soil samples will be collected and analyzed for total and hexavalent chromium and mercury to determine whether these constituents pose potential risk to human health and/or the environment, since there is some uncertainty following the SI human health and ecological risk screenings. Also, surface soil samples will be collected and analyzed for iron and pH to determine whether iron poses a potential ecological risk. Although iron was not identified as a refined ecological COPC in subsurface soil based on the low magnitude of its background value exceedance (ratio of 1.31), subsurface soil samples will also be collected and analyzed for iron and pH.
- If arsenic[2], chromium, iron, and/or mercury are identified as human health or ecological COPCs, calculate risks using the SI data and/or the data collected during the primary event to determine whether there are potentially unacceptable risks and to identify soil hot spots.
- If soil hot spots are identified outside of Area 2, then a contingency soil sampling event will be conducted to delineate the extent of the hot spot for inclusion in an AOC 2 Engineering Evaluation and Cost Analysis (EE/CA) for the interim removal action recommended in the SI. The sample locations will be determined based on the results of the primary event. The contingency soil samples will be analyzed for the metals that were determined to pose potentially unacceptable risk based on the results of the risk evaluation(s). Data from the SI supplemental soil sample collection and updated risk evaluations, as well as revised conclusions and recommendations, will be presented in the AOC 2 EE/CA[3].

This SAP details various aspects of the environmental investigation process that will serve as guidelines for the field sampling event to gather the required site data to conduct the SI supplemental soil sample

---

[1] A No Action Groundwater Risk Management Consensus Letter, including risk assessments, was prepared and signed by the CAX Partnering Team in 2013 (CH2M HILL, 2013).

[2] The historical arsenic analytical data will be used since the potential unacceptable carcinogenic risk is primarily associated with chromium, the only COPC that alone contributed a risk above the screening benchmark level during the SI human health risk evaluation. If chromium is in the trivalent form, it would not be considered a COPC, and the cumulative cancer risk would be below 5×10^{-5} and arsenic would not be identified as a COPC.

[3] The CAX Partnering Team has agreed to include the supplemental soil sampling results, evaluation, and recommendations in the EE/CA instead of preparing a separate Technical Memorandum (TM), because it will significantly expedite progress at the site.

collection for AOC 2. This SAP will ensure that collected environmental data are scientifically sound, of known and documented quality, and suitable for intended uses. The laboratory information cited in **Appendix B** of this SAP is specific to the laboratories that were selected. These laboratories possess the necessary Department of Defense (DoD) Environmental Laboratory Accreditation Program (ELAP) certification for the analytical methods required by this project. In the event of changes, revisions will be submitted to the CAX Partnering Team prior to commencement of field work.

This page is intentionally left blank.

Contents

1 Title and Approval Page 1

Executive Summary 5

Acronyms and Abbreviations 11

2 Project Organizational Chart 13

3 Communication Pathways 15

4 Project Planning Session Participants Sheets 19
4.1 June 2011 Scoping Session 19
4.2 July 2011 Scoping Session 20
4.3 March 2012 Scoping Session 21
4.4 June 2013 Scoping Session 23
4.5 March 2014 Scoping Session 24

5 Conceptual Site Model 27
5.1 Site Background and History 27
5.1.1 Previous Investigations 27
5.1.2 Physical Setting 28
5.1.3 Release History 29
5.1.4 Distribution of Contamination 29
5.1.5 Potential Migration Pathways 29
5.1.6 Potential Exposure and Receptor Pathways 30
5.1.7 What are the data gaps? 30

6 Data Quality Objectives/Systematic Planning Process Statements 31
6.1 Project Statement and Objectives 31
6.1.1 Data Quality Objectives 32
6.2 What are the environmental questions to be answered? 33
6.3 Project Action Limits 34
6.3.1 How will the data be used? 34
6.3.2 What types of data are needed? 35
6.3.3 Are there any special data quality needs, field or laboratory, in order to support environmental decisions? 35
6.3.4 Where, when, and how should the data be collected/generated? 35
6.3.5 How will the data be evaluated? 35
6.3.6 How will the data usability be documented? 36

7 Field Quality Control Samples 37
7.1 Field Quality Control Samples 37

8 Sampling Design and Rationale 39
8.1 Sampling Design and Rationale 39

9 Field Project Implementation 43
9.1 Field Project Tasks 43
9.1.1 Project Logistics 43
9.1.2 Field Project Tasks 43

9.2 Field SOPs Reference Table 45
9.3 Field Project Implementation (Field Project Instructions) 47

10 Reference Limits and Evaluation Tables 49

11 Analytical SOP References Table 51

12 Laboratory QC Samples Table 53

13 Data Verification and Validation (Steps I and IIa/IIb) Process Table 59

14 References 61

Attachment

1 Tier II UFP-SAP Format Approval

Appendixes

A Field Standard Operating Procedures
B Laboratory DoD ELAP Certifications

Tables

7-1 Measurement Performance Criteria Table for Field QC Samples – Soil Metals
7-2 Measurement Performance Criteria Table for Field QC Samples – Soil Wet Chemistry

8-1 AOC 2 Proposed Sampling Design and Rationale

9-1 Field SOPs Reference Table
9-2 Primary Event Sample Details Table

10-1A Reference Limits and Evaluation Table – Soil Metals
10-1B Reference Limits and Evaluation Table – Soil Wet Chemistry

11-1 Analytical SOP References Table

12-1 Laboratory QC Samples Table – Soil Metals
12-2 Laboratory QC Samples Table – Soil Wet Chemistry (pH)
12-3 Laboratory QC Samples Table

13-1 Data Verification and Validation (Steps I and IIa/IIb) Process Table

Figures

1 Base Location Map
2 AOC 2 Site Map
3 AOC 2 Estimated Debris/Waste Volumes
4 AOC 2 Conceptual Site Model
5 AOC 2 Proposed Surface Soil Sample Locations
6 AOC 2 Proposed Subsurface Soil Sample Locations
7 AOC 2 SI Supplemental Soil Collection Decision Logic

Acronyms and Abbreviations

%R	percent recovery
°C	degree Celsius
AES	Atomic Emission Spectroscopy
AM	Activity Manager
AOC	Area of Concern
AQM	Activity Quality Manager
bgs	below ground surface
CA	corrective action
CAS	Columbia Analytical Services
CAX	Cheatham Annex
CERCLA	Comprehensive Environmental Response, Compensation, and Liability Act
CLEAN	Comprehensive Long-term Environmental Action—Navy
COPC	constituent of potential concern
CSM	conceptual site model
DDT	dichlorodiphenyltrichloroethane
DL	detection limit
DoD	Department of Defense
DQI	data quality indicator
DV	Data Validator
EE/CA	Engineering Evaluation and Cost Analysis
ELAP	Environmental Laboratory Accreditation Program
ERA	ecological risk assessment
ESV	ecological screening value
FTL	Field Team Leader
g	gram
GPS	global positioning system
HASP	Health and Safety Plan
HDPE	high-density polyethylene
HQ	hazard quotient
ICP	inductively coupled plasma
ICP-MS	inductively coupled plasma mass spectrometry
ICS	interference check solution
ID	identification
IDW	investigation-derived waste
Katahdin	Katahdin Analytical Services, Inc.
LCS	laboratory control sample
LOD	limit of detection
LOQ	limit of quantitation
LR	laboratory replicate
mg/kg	milligram per kilogram
ml	milliliter

MPC	Measurement Performance Criteria
MS	matrix spike
MSA	method of standard additions
MSD	matrix spike duplicate
N/A	not applicable
NAVFAC	Naval Facilities Engineering Command
Navy	Department of the Navy
NC	no criterion
NFA	no further action
NTR	Navy Technical Representative
oz	ounce
PAL	Project Action Limit
PC	Project Chemist
PDS	post-digestion spike
PM	Project Manager
POC	point of contact
PPE	personal protective equipment
PQL	project quantitation limit
PSLP	Penniman Shell Loading Plant
QA	quality assurance
QAO	Quality Assurance Officer
QAPP	Quality Assurance Project Plans
QC	quality control
QL	quantitation limit
QSM	Quality Systems Manual
RA	risk assessor
RI	Remedial Investigation
RL	reporting limit
RPD	Relative Percent Difference
RPM	Remedial Project Manager
RSL	Regional Screening Level
SAP	Sampling and Analysis Plan
SI	Site Inspection
SOP	Standard Operating Procedure
STC	Senior Technical Consultant
TBD	to be determined
TM	Technical Memorandum
UFP	Uniform Federal Policy
USEPA	United States Environmental Protection Agency
UTL	upper tolerance limit
VDEQ	Virginia Department of Environmental Quality
VOC	volatile organic compound
WPNSTA	Naval Weapons Station
yd^3	cubic yard

2 Project Organizational Chart

(UFP-QAPP Manual Section 2.4.1 – Worksheet #5)

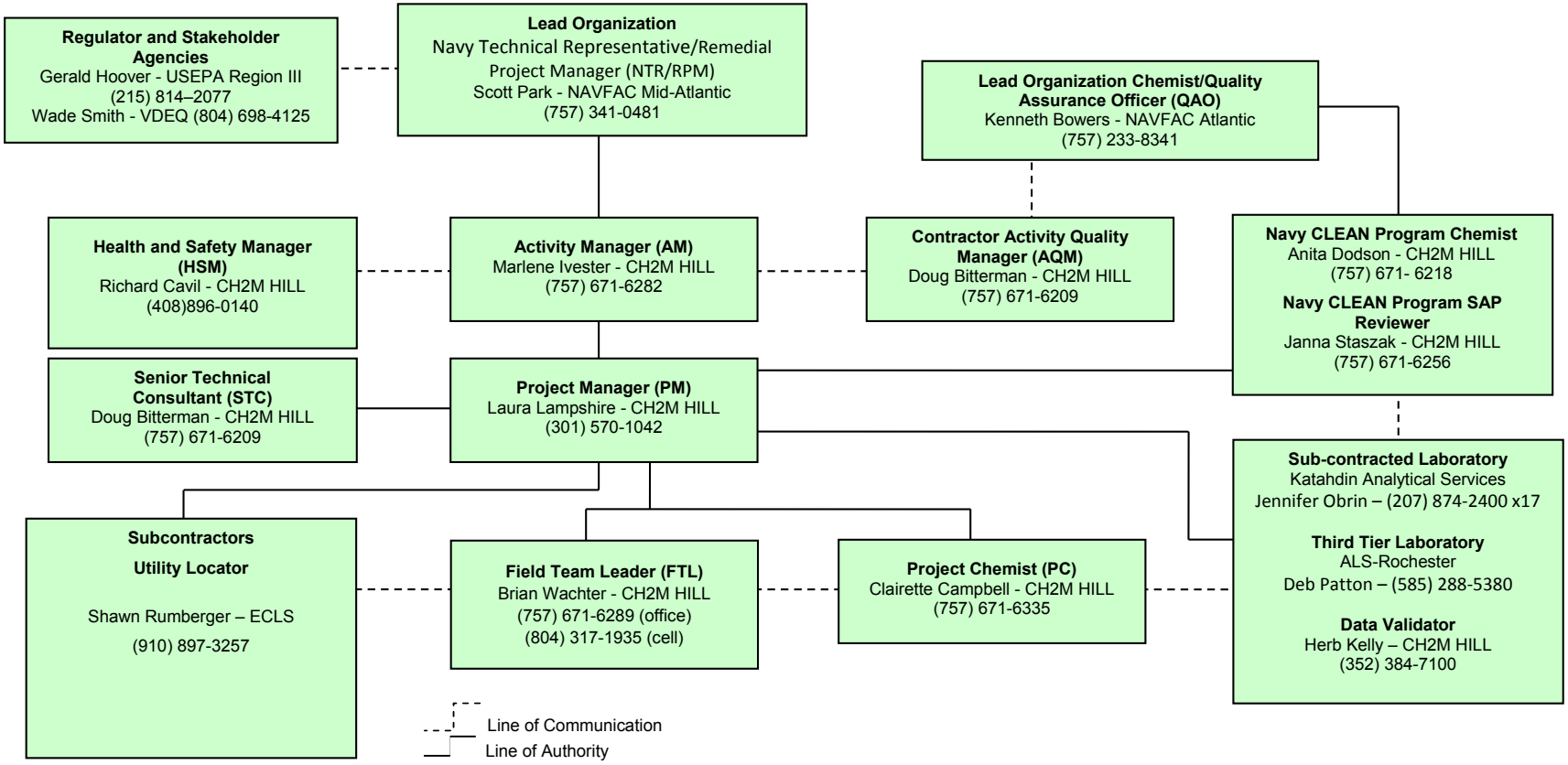

This page intentionally left blank.

3 Communication Pathways

(UFP-QAPP Manual Section 2.4.2 – Worksheet #6)

Communication Drivers	Responsible Affiliation	Name	Telephone Number and/or E-mail	Procedure, Pathway, etc.
Communication with Department of the Navy (Navy) (lead agency)	Naval Facilities Engineering Command (NAVFAC) Navy Technical Representative (NTR)/ Remedial Project Manager (RPM)	Scott Park	(757) 341-0481 scott.park@navy.mil	Primary point of contact (POC) for Navy; can delegate communication to other internal or external POCs. Any issues that may impact project work are to be reported to Scott immediately. NTR/RPM will notify the United States Environmental Protection Agency (USEPA) and Virginia Department of Environmental Quality (VDEQ) via e-mail or telephone within 24 hours of field changes affecting the scope or implementation of the work. Navy will have 30 days for Sampling and Analysis Plan (SAP) review.
Communication with USEPA Region III	USEPA RPM	Gerald Hoover	(215) 814-2077 Hoover.gerald@epa.gov	Primary POC for USEPA; can delegate communication to other internal or external POCs. Upon notification of field changes, USEPA will have 24 hours to approve or comment on the field changes. Responses will be communicated via e-mail or telephone.
Communication with VDEQ	VDEQ RPM	Wade Smith	(804) 698-4125 wade.smith@deq.virginia.gov	Primary POC for VDEQ; can delegate communication to other internal or external POCs. Upon notification of field changes, VDEQ will have 24 hours to approve or comment on the field changes. Responses will be communicated via e-mail or telephone.
Communication regarding overall project status and implementation and primary POC with Navy NTR/RPM, USEPA, and VDEQ	CH2M HILL Activity Manager (AM)	Marlene Ivester	(757) 671-6282 marlene.ivester@ch2m.com	Primary POC for stakeholder and agency managers; can delegate agency communication to other contract staff as appropriate. Oversees project and will be informed of project status by the Project Manager (PM). If field changes occur, the AM will work with the Navy NTR/RPM to communicate field changes to the USEPA and VDEQ via e-mail within 24 hours.
Communications regarding overall project status, project management, and implementation	CH2M HILL Deputy AM	Stephanie Sawyer	(757) 671-6273 stephanie.sawyer@ch2m.com	Primary modes of communication are telephone, e-mail, letter, and document submittal; timing dependent on nature of communication and predefined schedule as applicable and as requested by stakeholder agencies. The Deputy AM provides support and backup for the AM and PM.

Communication Drivers	Responsible Affiliation	Name	Telephone Number and/or E-mail	Procedure, Pathway, etc.
Communications regarding project management and implementation	CH2M HILL PM	Laura Lampshire	(301) 570-1042 laura.lampshire@ch2m.com	Primary modes of communication are telephone, e-mail, letter, document submittal; timing dependent on nature of communication and predefined schedule as applicable and as requested by stakeholder agencies. The PM will have 24 hours to respond to the request for field corrective actions (CAs). Responses will be communicated to the Field Team Leader (FTL) via telephone. All information and materials about the project will be forwarded to the AM on a daily basis.
Technical communications for project implementation and data interpretation	CH2M HILL Senior Technical Consultant (STC) and Activity Quality Manager (AQM)	Doug Bitterman	(757) 671-6209 doug.bitterman@ch2m.com	Team members will contact the STC regarding questions/issues encountered in the field, input on data interpretation, and so forth, as needed. The STC will have 24 hours to respond to technical field questions as necessary. Responses will be communicated to the PM via e-mail or telephone. In addition, the STC/AQM will review data and deliverables as necessary prior to Partnering Team discussion or distribution.
SAP/Work Plan Changes prior to Field/Laboratory work	PM	Laura Lampshire	(301) 570-1042 laura.lampshire@ch2m.com	Notify the Cheatham Annex (CAX) Partnering Team by telephone or e-mail of changes to the SAP made prior to beginning field work and the reasons within 24 hours.
Field Progress Reports	FTL	Brian Wachter	(804)317-1935 brian.wachter@ch2m.com	E-mail or fax daily field progress reports to contractor PMs on a weekly basis; telephone communication with PMs on an as-needed basis.
Stop Work due to Safety Issues	Site Safety Coordinator	Brian Wachter	(804)317-1935 brian.wachter@ch2m.com	Notify field personnel that work is to stop immediately if a safety issue is observed. Report all health and safety incidents and near-misses to PM and Health and Safety Manager via e-mail or telephone immediately if an incident occurred or within 24 hours if a near-miss occurred.
SAP/Work Plan Changes in the Field	FTL	Brian Wachter	(804)317-1935 brian.wachter@ch2m.com	Notify the PM by telephone and e-mail of changes to the SAP made in the field and the reasons within 24 hours. Documentation of deviations from the SAP will be kept in the field log book; deviations made only with the approval of the PM. Approvals will be made via e-mail or telephone.
Field CAs	FTL	Brian Wachter	(804)317-1935 brian.wachter@ch2m.com	The need for CA for field or analytical issues will be determined by the FTL and/or senior risk assessors (RAs) and STC. Senior support will ensure SAP requirements are met by the field staff. The FTL will notify the PM via telephone of any need for CA within 4 hours. The PM/AM may notify the Navy RPM of any field issues that would negatively affect schedule or the ability to meet project data quality objectives.

Communication Drivers	Responsible Affiliation	Name	Telephone Number and/or E-mail	Procedure, Pathway, etc.
Reporting Laboratory Data Quality Issues	Laboratory PM	Katahdin Analytical Services, Inc. (Katahdin) – Greg Lull	(207) 874-2400 glull@katahdinlab.com	All quality assurance (QA)/quality control (QC) issues with project field samples will be reported within 1 day to the Project Chemist (PC) by the laboratory.
Reporting Data Validation Issues	Data Validator (DV)	Herb Kelly	(352) 384-7100 herb.kelly@ch2m.com	All completeness and data issues will be addressed with the laboratory. The DV should copy the CH2M HILL PC on all communications to the laboratory. The validated data package will be due within 14 calendar days of data receipt by the DV.
Sample Tracking, Laboratory Communication, Data Validation CAs	PC	Clairette Campbell	(757) 671-6335 clairette.campbell@ch2m.com	The PC tracks the data and informs the PM of potential problems or issues. The PM and AM are informed within 24 hours to pass on communications to Navy and regulators as appropriate. All issues discovered during data validation will be reported to the PC. CAs (revisions and additional information, if necessary) will be requested from the laboratory. The PC will review the data validation narrative and request CA from the DV if necessary. Should analytical laboratory issues affect data usability by rendering a significant amount of rejectable or unusable data, such that the project completeness goal cannot be obtained, the PC will notify the Project Team, including the Navy NTR/RPM and Navy Quality Assurance Officer (QAO).

This page intentionally left blank.

4 Project Planning Session Participants Sheets

(UFP-QAPP Manual Section 2.5.1 – Worksheet #9)

Six project scoping sessions were conducted with the CAX Partnering Team, as described in the following sections.

4.1 June 2011 Scoping Session

Project Name: Area of Concern (AOC) 2 Site Inspection (SI) Supplemental Soil Sample Collection			**Site Name:** AOC 2	
Projected Date(s) of Sampling: May 2014			**Site Location:** CAX	
PM: Marlene Ivester				
Date of Session: 6/21/2011 and 6/23/2011 (e-mail correspondence)				
Scoping Session Purpose: Initiate discussion of the proposed mercury soil sampling at AOC 2				
Name	**Title**	**Affiliation**	**Telephone #**	**E-mail Address**
Krista Parra	RPM	NAVFAC Mid-Atlantic	(757) 341-0395	krista.parra@navy.mil
Susanne Haug	RPM	USEPA Region III	(215) 814-3394	haug.susanne@epamail.epa.gov
Marlene Ivester	AM/PM	CH2M HILL	(757) 671-1634	marlene.ivester@ch2m.com
Stephanie Sawyer	Deputy AM	CH2M HILL	(757) 671-6273	stephanie.sawyer@ch2m.com
Wade Smith	RPM	VDEQ	(804) 698-4125	wade.smith@deq.virginia.gov

Comments/Decisions

Based on the CAX AOC SI results for AOC 2, mercury was identified as a surface and subsurface soil ecological risk constituent of potential concern (COPC); however, since the concentrations were so uniform across the site and the site debris is believed to be an unlikely mercury source, the CH2M HILL ecological RA questioned whether the results were representative of background conditions or the result of a laboratory analytical problem (that is, not real). The Navy sent an e-mail on June 21, 2011, to the CAX Partnering Team proposing to collect site-specific background samples for AOC 2 to confirm whether or not mercury in soil at the site is related to natural background conditions. In addition, the Navy proposed collecting eight surface and subsurface soil samples for mercury analysis. Four of the sample locations would be at historical sample locations to verify earlier mercury results and four of the sample locations would be outside of the site boundary to be used as background samples. The analytical results and proposed path forward for mercury would be presented in a Technical Memorandum (TM) to the CAX Partnering Team.

The USEPA responded via e-mail on June 23, 2011, and agreed with the proposal to resample soil in order to verify the presence of mercury. However, the USEPA disagreed with collection of soil samples for the purpose of site-specific background analysis since a Base-wide background study was already agreed upon. Instead, the USEPA proposed that any soil samples collected outside the AOC 2 boundaries could be used to delineate mercury. To expedite sample collection, the Navy (RPM and Chemist) proposed a “bare bones” SAP Addendum that would include only Worksheets 10, 11, 15, 24, 25, and 28. The Team agreed the samples could be collected without a formal SAP in order to continue with preparation of the AOC 2 Engineering Evaluation and Cost Analysis (EE/CA) for an interim removal action.

4.2 July 2011 Scoping Session

Project Name: AOC 2 SI Supplemental Soil Sample Collection	**Site Name:** AOC 2
Projected Date(s) of Sampling: May 2014	**Site Location:** CAX
PM: Marlene Ivester	
Date of Session: 7/27/2011	
Scoping Session Purpose: To provide the CAX Partnering Team, during the July 2011 CAX Partnering Meeting, with an update on the AOC 2 historical soil mercury laboratory and data validation packages review	

Name	Title	Affiliation	Telephone #	E-mail Address
Krista Parra	RPM	NAVFAC Mid-Atlantic	(757) 341-0395	krista.parra@navy.mil
John Burchette	RPM	USEPA Region III	(215) 814-3378	burchette.john@epamail.epa.gov
Marlene Ivester	AM/PM	CH2M HILL	(757) 671-1634	marlene.ivester@ch2m.com
Stephanie Sawyer	Deputy AM	CH2M HILL	(757) 671-6273	stephanie.sawyer@ch2m.com
Wade Smith	RPM	VDEQ	(804) 698-4125	wade.smith@deq.virginia.gov
Bruce Beach	Tier 2 Member	USEPA Region III	(215) 814-3364	beach.bruce@epa.gov

Comments/Decisions

Following the June 2011 Team agreement to prepare a “bare bones” SAP Addendum to collect additional soil samples at AOC 2, the Navy Chemist suggested to the Navy RPM that prior to completing an addendum and sample collection, a review of the original raw data and validation packages be completed to determine whether the reported mercury results were accurate since the mercury concentrations appear to be evenly distributed across the site, suggesting they are not related to the debris and may be naturally occurring. In addition, the type of debris at AOC 2 (dextrose bottles, unused respirator cartridges, and military uniforms) is not likely a mercury source. Thus, additional mercury soil sampling may not be necessary. The Navy RPM agreed and informed the Team that the AOC 2 sampling addendum would be put on-hold while the Navy Chemist and a chemist from CH2M HILL reviewed the lab packages. The full laboratory reports from the previous contractor were requested; however, CH2M HILL and the Navy were still waiting to receive them. It was proposed that the results of the historical data review be presented in a TM for Team review. The Team was fine with the proposal and with postponing the addendum and sampling while the lab packages were reviewed.

4.3 March 2012 Scoping Session

Project Name: AOC 2 SI Supplemental Soil Sample Collection			**Site Name:** AOC 2	
Projected Date(s) of Sampling: May 2014			**Site Location:** CAX	
PM: Marlene Ivester				
Date of Session: 3/8/2012				
Scoping Session Purpose: **To agree on the proposed sampling plan for the AOC 2 Additional Soil Sample Collection**				
Name	**Title**	**Affiliation**	**Telephone #**	**E-mail Address**
Krista Parra	RPM (exiting)	NAVFAC Mid-Atlantic	(757) 341-0395	krista.parra@navy.mil
John Burchette	RPM	USEPA Region III	(215) 814-3378	burchette.john@epamail.epa.gov
Marlene Ivester	AM/PM	CH2M HILL	(757) 671-1634	marlene.ivester@ch2m.com
Stephanie Sawyer	Deputy AM	CH2M HILL	(757) 671-6273	stephanie.sawyer@ch2m.com
Wade Smith	RPM	VDEQ	(804) 698-4125	wade.smith@deq.virginia.gov
Scott Park	RPM (entering)	NAVFAC Mid-Atlantic	(757) 341-0481	scott.park@navy.mil

Comments/Decisions

In December 2011, the USEPA provided comments on the historical data review TM previously mentioned during the July 2011 scoping session. The common thread in the comments was that if the historical results are in question, new samples should be collected. Based on the USEPA's comments, the Navy said no additional work would occur on the draft TM and it would not go final. Instead, the Navy would move forward with preparation of a SAP Addendum to collect the supplemental soil samples at AOC 2. The Team agreed. This scoping session was conducted to bring the new Navy RPM up-to-speed on the discussions to date and to provide a more comprehensive scoping session than the one conducted in June 2011.

The Team reviewed the series of decisions that led to the current proposed SI Additional Soil Collection at AOC 2, along with the SI Report conclusions and the recommendations for AOC 2, which included:

- Conducting a Removal Action to remove the respirator cartridges and drums at debris Area 2
- No further action (NFA) for groundwater[4]

Prior to conducting the removal action at AOC 2, the Team discussed collecting additional soil samples to address the following additional data gaps outside of debris Area 2:

- To address potential human health risks:
  - Collect surface and subsurface soil samples to be analyzed for hexavalent and total chromium to determine whether the removal action should include any arsenic and chromium "hot spots" identified by the additional soil analytical data. The potential unacceptable carcinogenic risk is primarily associated with chromium, the only COPC that alone contributes a risk above the screening benchmark level. If chromium is in the trivalent form, it would not be considered a COPC, and the cumulative cancer risk would be below 5×10^{-5} and arsenic would not be identified as a COPC.

[4] A No Action Groundwater Risk Management Consensus Letter, including risk assessments, was prepared and signed by the CAX Partnering Team in 2013 (CH2M HILL, 2013).

- To address potential ecological risks:
  - Collect surface and subsurface soil samples to be analyzed for mercury to confirm the historical sample results. The new mercury data will be used to update the SI ecological risk screening and, if mercury continues to be identified as a COPC in either or both media, the removal action will include mercury hot spots outside of Area 2.
  - Also analyze the samples for pH and iron to determine whether iron poses a potential ecological risk (for ecological risk, iron is screened based on soil pH [less than 5 or greater than 8]). There are no historical soil pH data, thus iron was identified as an ecological COPC in the SI where the result was above background levels. Note: Iron was not identified in the SI as a refined COPC for subsurface soil based on the low magnitude of its background value exceedance [ratio of 1.31]. However, since there are no soil pH data to definitely refine risks for iron, the collection of pH and iron data in both surface and subsurface soil is proposed.)

CH2M HILL informed the Team that the detection of 4,4'-dichlorodiphenyltrichloroethane (DDT) in surface soil that exceeded the ecological screening value (ESV) and the Aroclor-1260 and thallium detections that exceeded human health risk screening criteria during the SI are located in Area 2 and would be addressed by the removal action. Therefore, the proposed supplemental soil sampling does not include analysis for these constituents.

The Team decided that two surface soil samples would be collected as close as possible to former surface soil sample locations CAA02-A2HA01 and CAA02-A2-DPB03, and two subsurface soil samples would be collected as close as possible to former subsurface soil samples locations CAA02-A2HA01 and CAA02-A2-TP03N, and these samples would be analyzed for total and hexavalent chromium. Since surveyed coordinates for the former sample locations are not available, the proposed samples will be located as close as possible to the former sample locations using coordinates obtained from figures in the historical reports. The USEPA asked if the proposed soil samples are located within Area 2 (the respirator and drum disposal area). CH2M HILL stated they were not since (1) the disposal area within Area 2 will be removed as part of the future removal action, and (2) the purpose of the additional sampling is to focus on the area outside Area 2 to determine whether the future Area 2 removal action needs to be expanded to include any arsenic/chromium or mercury hot spots beyond the Area 2 boundary. The Team agreed to the two surface and subsurface soil sample locations to be analyzed for total and hexavalent chromium.

The Team also decided that four surface and subsurface soil samples be collected as close as possible to former sample locations CAA02-A2HA01, CAA02-A2-DPB02, CAA02-A2-DPB03, and CAA02-A2-DPB04, and these samples would be analyzed for mercury, iron, and pH. In addition, since these samples will be collected as close as possible to former sample locations, the new mercury, iron, and pH data will replace the old mercury and iron data used in the SI to calculate potential ecological risk. The Team agreed to the number, location, and use of the proposed surface and subsurface soil samples.

The following environmental questions will be answered by this investigation:

1) **Is chromium a human health COPC in surface and subsurface soil?** Two surface (0 to 6 inches) and two subsurface (1 to 2 feet below ground surface [bgs] and 3.5 to 4 feet bgs at CAA02-A2HA01 and CAA02-A2-TP03N, respectively) soil samples will be collected and analyzed for total and hexavalent chromium. These results will be used to update the SI human health risk screening with the new data.

If chromium is present at sufficient concentrations in the hexavalent form, the human health risk conclusions of the SI remain valid; thus, chromium and arsenic are COPCs, and the Area 2 removal action would include hot spot removals for these constituents outside of Area 2.

If chromium is largely present in the trivalent form, chromium and arsenic are not COPCs, and the Area 2 removal action would not include hot spot removals for these constituents outside of Area 2.

2) **Is mercury an ecological COPC in surface and subsurface soil?** Four surface (0 to 6 inches) and four subsurface (6 to 24 inches) soil samples will be collected and analyzed for mercury. These results will replace the previously collected mercury analytical data and will be used to update the SI ecological risk screening with the new data.

3) **Is iron an ecological COPC in surface and subsurface soil?** Four surface (0 to 6 inches) and four subsurface (6 to 24 inches) soil samples will be collected and analyzed for iron and pH. These results will be used to update the SI ecological risk screening with the new data.

CH2M HILL asked the Team if the Multiple AOC SI itself could to go final with the current conclusions and recommendations, and not be delayed for a final document that incorporated the supplemental AOC 2 data. It was proposed that the new AOC 2 data and updated screens, including new conclusions and recommendations, be presented in a separate TM for Team review. The USEPA responded by asking if the current conclusions of the SI line up with the proposed supplemental sampling for AOC 2, and CH2M HILL confirmed that they did. Therefore, the Team agreed that the data collected as part of the AOC 2 supplemental soil sample collection can be provided in a separate document, so the final CAX Multiple AOC SI Report can be prepared and submitted.

The Team reviewed the AOC 2 SAP schedule, and CH2M HILL mentioned that it may change due to the prioritization of other CAX SAPs (such as the Site 4 Remedial Investigation [RI], Youth Pond RI, and Penniman Lake SI Step 2) being drafted separately for the Team's review.

4.4 June 2013 Scoping Session

Project Name: AOC 2 SI Supplemental Soil Sample Collection			**Site Name:** AOC 2	
Projected Date(s) of Sampling: May 2014			**Site Location:** CAX	
PM: Marlene Ivester				
Date of Session: 6/25/2013				
Scoping Session Purpose:	**An informational meeting to review the path forward for AOC 2 in anticipation of preparing the SAP and to reach Team agreement on a proposal to change which document will report the results of the additional soil sampling**			
Name	Title	Affiliation	Telephone #	E-mail Address
Scott Park	RPM	NAVFAC Mid-Atlantic	(757) 341-0481	scott.park@navy.mil
Susanne Haug	RPM	USEPA Region III	(215) 814-3394	haug.susanne@epamail.epa.gov
Paula Estornell	Tier 2 Member	USEPA		
Marlene Ivester	AM/PM	CH2M HILL	(757) 671-1634	marlene.ivester@ch2m.com
Stephanie Sawyer	Deputy AM	CH2M HILL	(757) 671-6273	stephanie.sawyer@ch2m.com
Wade Smith	RPM	VDEQ	(804) 698-4125	wade.smith@deq.virginia.gov
Laurel Boucher	CAX Partnering Team Facilitator	The Management Edge	(906) 387-4272	lboucher@up.net

Comments/Decisions

An informational presentation was conducted to remind the CAX Partnering Team of the status of AOC 2 ahead of their receipt of the AOC 2 SI supplemental soil sample collection SAP. CH2M HILL proposed

presenting the SI supplemental soil sample results in the upcoming AOC 2 EE/CA for the Area 2 removal action instead of in a separate TM since:

- It would eliminate the need for two separate document reviews
- The EE/CA's remedial action alternatives, and thus the extent of the removal action, are dependent on the sampling results
- It would advance the AOC 2 schedule

The USEPA and VDEQ took an Action Item[5] to check within their respective organizations to confirm whether an EE/CA can include an evaluation of sample results.

4.5 March 2014 Scoping Session

Project Name: AOC 2 SI Supplemental Soil Sample Collection	**Site Name:** AOC 2
Projected Date(s) of Sampling: Summer 2014	**Site Location:** CAX
PM: Laura Lampshire	
Date of Session: correspondence via e-mail dated 3/11/2014	
Scoping Session Purpose:	**Correspondence with the Team to reach agreement on including contingency soil sampling in the SAP to delineate the extent of any hot spots identified outside the Area 2 boundary during the primary sampling event at AOC 2**

Name	Title	Affiliation	Telephone #	E-mail Address
Scott Park	RPM	NAVFAC Mid-Atlantic	(757) 341-0481	scott.park@navy.mil
Gerald Hoover	RPM	USEPA Region III	(215) 814-2077	hoover.gerald@epa.gov
Marlene Ivester	AM	CH2M HILL	(757) 671-1634	marlene.ivester@ch2m.com
Wade Smith	RPM	VDEQ	(804) 698-4125	wade.smith@deq.virginia.gov
Laura Lampshire	PM	CH2M HILL	(301) 570-1042	laura.lampshire@ch2m.com

Comments/Decisions

The Team decided to conduct a primary sampling event and, based on the results of the primary event, determine whether additional data should be collected during a contingency event. The primary event would consist of the collection of surface and subsurface soil samples to be analyzed for select metals that are potentially human health or ecological COPCs, as discussed during the previous scoping sessions (Sections 4.1 to 4.4), to determine whether there are any hot spots outside of Area 2 that would need to be addressed during the Area 2 removal action. The contingency event, if needed, would include additional surface and/or subsurface soil sample collection to delineate the extent(s) of any hot spot(s). The contingency sample locations would be determined based on the results of the primary event; the analyses would be the same as for the primary event, depending on the type of hot spot identified (for example, if a mercury hot spot is identified, the contingency samples collected to delineate it would be analyzed for mercury only).

[5] October 23, 2013 – VDEQ accepted (via e-mail) the proposal to not prepare a separate TM for the soil sampling results. January 7, 2014 – USEPA provided (via e-mail) agreement with the Navy and VDEQ on this issue.

With the addition of a contingency event, the Team agreed to the following project objectives:

- A primary event for soil sample collection to augment the current SI dataset for the purpose of updating the human health and ecological risk evaluations to determine whether arsenic, chromium, mercury, and iron (via collection of pH) at AOC 2 pose potentially unacceptable risks to human health or the environment and to determine whether the removal action proposed for Area 2 needs to include any hot spot removal(s) for these constituents outside the Area 2 boundary.
- If no soil hot spot(s) are identified, then the AOC 2 removal action will only include Area 2.
- If soil hot spot(s) are identified from the primary event data, contingency data will be collected to delineate the extent of the hot spot(s) prior to preparation of the removal action EE/CA.

This page intentionally left blank.

5 Conceptual Site Model

(UFP-QAPP Manual Section 2.5.2 – Worksheet #10)

The conceptual site model (CSM) for AOC 2 is based on data evaluated in the SI. This CSM presents the site background and history, physical setting, distribution of contamination, release history, potential migration pathways, and the potential exposure and receptor pathways. The CSM figure for AOC 2 is provided as **Figure 4.**

5.1 Site Background and History

CAX encompasses 2,300 acres east of Williamsburg, between Interstate 64 and the York River on the York-James Peninsula of Virginia (**Figure 1**). CAX is located on the site of the former DuPont Company Penniman Shell Loading Plant (PSLP) facility and is currently used to supply Atlantic Fleet ships and provide recreational opportunities to military and civilian personnel. The former PSLP was used as a powder and shell loading plant during World War I, closed in 1918, and dismantled in the early 1920s. Currently, the majority of CAX is undeveloped and heavily wooded. Surface water features at CAX include Cheatham Pond, Jones Pond, and Penniman Lake, and the York River is adjacent to CAX's northeastern to eastern boundaries.

AOC 2 is a small (less than 1 acre), wooded site located to the north of Garrison Road, along the southern perimeter of CAX as depicted on **Figure 1**. AOC 2 was identified during site visits by the Navy, USEPA, VDEQ, and Baker Environmental, Inc., in late 1997 and early 1998, and consists of several rows of concrete foundation piers that at one time supported a Shipping House associated with the former DuPont Company PSLP facility (**Figure 2**). The majority of structures associated with the PSLP facility were demolished between 1918 and 1925. Grass-covered lanes leading to the site area are likely remnants of former railroad lines that have been removed. Partially buried glass bottles (of which the majority were labeled "dextrose") and unlabeled, empty, 55-gallon drums were discovered in the area. Several mounds also present in the area were suspected to contain buried debris (Baker, 2001).

5.1.1 Previous Investigations

The following investigations have been conducted at AOC 2:

- A routine housekeeping effort in 1998 involving the removal of glass bottles from the ground surface of AOC 2 (RMI, 1998) and the removal of drums and air-purifying respirator cartridges from Area 2 during exploratory test pit activities in 2000 (Baker, 2001)
- Final Field Investigation Report, Site 1 and AOC 2, Naval Weapons Station Yorktown, Yorktown, Virginia, Cheatham Annex Site (Baker, 1999)
- Final Field Investigation Report, Site 7 and AOC 2, Naval Weapons Station Yorktown Cheatham Annex, Williamsburg, Virginia (Baker, 2001)
- Final Trenching Letter Report, Site 1, Site 4, and AOC 2, Naval Weapons Station Yorktown, Cheatham Annex Site, Williamsburg, Virginia (Baker, 2002)
- Final Site Inspection Report, Areas of Concern 1, 2, 6, 7, and 8, Naval Weapons Station Yorktown Cheatham Annex, Williamsburg, Virginia (CH2M HILL, 2012)

In May 1998, a routine housekeeping operation was performed at AOC 2 and a total of 470 glass bottles were removed from the ground surface. During the 1998 field investigation, 12 partially buried and empty 55-gallon drums were observed at the ground surface. A subsequent investigation was conducted in late 1999 and early 2000 to investigate the drums and debris onsite. During this investigation, the debris that was unearthed or collected from the ground surface (including 43 empty 55-gallon drums and 8,000 pounds of respirator cartridges from Area 2) was disposed offsite; however, the majority of the buried debris was not

removed. In 2001, 15 trenches were excavated at AOC 2 to determine the presence or absence of buried respirator cartridges along Deer Pit Road and to obtain additional information concerning materials potentially buried at AOC 2. Based on the types of debris observed during the trenching activities, AOC 2 was separated into three areas: Areas 1a and 1b (containing dextrose bottles), Area 2 (containing unused respirator cartridges and empty 55-gallon drums), and Area 3 (containing military clothing) (**Figure 3**).

Human health and ecological risk screenings of the historical data collected at AOC 2 were conducted and included in a multiple AOC SI (CH2M HILL, 2012). Based on the human health and ecological risk evaluations, the SI concluded:

- Exposure to surface soil at AOC 2 may result in potentially unacceptable human health risks associated with arsenic and chromium, as well as potentially unacceptable ecological risks associated with 4,4'-DDT, mercury, and iron.
- Exposure to subsurface soil at AOC 2 may result in potentially unacceptable human health risks associated with Aroclor-1260, arsenic, chromium, copper, and thallium, as well as potentially unacceptable ecological risk associated with mercury.

The SI recommended an interim removal action at Area 2 to remove the buried debris (respirator cartridges and empty 55-gallon drums).The removal action would also address the potentially unacceptable ecological risk associated with 4,4'-DDT in surface soil and the human health COPCs in surface and subsurface soil within Area 2. Given the uncertainty regarding whether arsenic, chromium, and mercury are human health or ecological COPCs outside of Area 2, the SI recommended collecting surface and subsurface soil samples to update the risk screenings with these new data. In addition, pH and new iron data will be collected to determine whether iron poses a potential ecological risk since pH data were not available in the historical data set evaluated in the SI. If the new data and updated risk screenings identify any of these constituents as COPCs, a human health risk assessment and/or ecological risk assessment (ERA) of the data will be conducted to determine whether there are hot spot areas outside of Area 2 that need to be addressed. If hot spot removal(s) is/are necessary, there will be a contingency soil sampling event to delineate the extent(s) of the hot spot(s) for inclusion in the removal action EE/CA for Area 2.

5.1.2 Physical Setting

The topography of AOC 2 is predominantly flat. No wetlands or other surface water bodies are located at AOC 2, and there are no nearby water bodies downgradient of the site. Surface runoff at the site is anticipated to pond and infiltrate into the subsurface or evaporate.

In general, the native soil is predominantly composed of clay and silt at AOC 2. As observed during trenching activities in 2001, a fill layer of sand was found to be present over buried materials in some areas of AOC 2 (Baker, 2002). Soil boring and test pit logs from previous investigations at AOC 2 are included in the Site 1 and AOC 2 Final Field Investigation Report (Baker, 1999); the Site 7 and AOC 2 Final Field Investigation Report (Baker, 2001); and the Site 1, Site 4, and AOC 2 Final Trenching Letter Report (Baker, 2002).

The shallow aquifer underlying AOC 2 is the Cornwallis Cave aquifer. Groundwater depths during the 1998 Field Investigation ranged from 22 to 33 feet bgs. Based on groundwater elevation data collected in 1998, groundwater flow is to the southeast, toward King Creek (Baker, 1999).

AOC 2 is located in a wooded area with no specified designated use. AOC 2 is not surrounded by a gate or fencing, but it is within the confines of CAX where access is not open to the general public. Navy and Department of Defense (DoD) personnel do have access to the area, and there are nearby tree stands used for hunting. Future land use at AOC 2 is not expected to change and will likely continue as wooded/green space for the foreseeable future.

5.1.3 Release History

Historical information indicates the site is an unlined, non-permitted disposal area with unknown date(s) of debris disposal. Debris identified at AOC 2 includes respirator cartridges, empty drums, dextrose bottles, deer carcasses, and military clothing. AOC 2 is listed as a Site Screening Area within the CAX Federal Facilities Agreement as a site that "may pose a threat, or potential threat, to human health and the environment" (Navy, 2005).

The findings of the SI indicate that detected pesticide and iron concentrations in surface soil are likely related to normal, Base-wide pesticide use and background conditions, respectively, and not the result of a site-related release. However, the origins of the polychlorinated biphenyl (Aroclor-1260) and whether the concentrations of other metals (arsenic, chromium, copper, and thallium) detected in AOC 2 soil were the result of a release is not known.

5.1.4 Distribution of Contamination

AOC 2 was separated into three areas based on the types of debris observed during the 1999, 2000, and 2001 test pit and trenching activities. Areas 1a and 1b contain dextrose bottles and minor debris, and Area 3 contains military clothing (**Figure 3**). Area 2 contains respirator cartridges and empty 55-gallon drums. Calculations of the debris volumes generated for each of these areas were computed for anticipated future removal and disposal. As documented in the Final Trenching Letter Report (Baker, 2002), the three areas are shown on **Figure 3** and the estimated waste volumes are as follows:

Areas 1a, 1b, and 3 (inert debris)	=	890 cubic yards (yd^3)
Area 2 (unopened respirator cartridges and empty 55-gallon drums)	=	445 yd^3
Total debris volume of Areas 1a, 1b, 2, and 3	=	1,335 yd^3

Based on risk screenings conducted on the historical AOC 2 analytical data during the SI:

- Exposure to surface soil at AOC 2 may result in potentially unacceptable human health risks associated with arsenic and chromium. There are potential ecological risks in surface soil associated with 4,4'-DDT, mercury, and iron; however, the presence of 4,4'-DDT may be attributable to normal pesticide applications, iron is likely associated with background conditions, and the calculated human health risk to arsenic and chromium in the surface and subsurface soil is based on the assumption that the detected chromium is in the hexavalent form, which is highly unlikely.
- Exposure to subsurface soil at AOC 2 may result in potentially unacceptable human health risks associated with Aroclor-1260, arsenic, chromium, copper, and thallium. There is potential ecological risk in subsurface soil associated with mercury.

5.1.5 Potential Migration Pathways

The source of potential contamination at AOC 2 is the historical debris that has been found within Area 2 of the site (respirator cartridges and empty drums) (**Figure 3**). For Areas 1a, 1b, and 3, the debris is inert (dextrose bottles, deer carcasses, and military uniforms) and not considered to be a Comprehensive Environmental Response, Compensation, and Liability Act (CERCLA)-regulated concern[6]. Some of the Area 2 debris was removed during the 1999 investigation, with a full removal of Area 2 planned for the near future. The potential migration pathways from the Area 2 source area primarily involve leaching of contaminants from the buried debris caused by infiltrating precipitation. Any constituents that are leached from the source area debris have the potential to contaminate soil immediately adjacent to or underneath the waste; this

[6] The CAX Partnering Team agreed during the May 2011 Partnering Meeting that the dextrose bottles and military clothing are inert and not CERCLA-regulated and will therefore not be removed.

pathway will be assessed through post-removal action confirmation sampling and is not addressed in this SAP. The source of possible contamination in potential hot spots is unknown; if contamination is present, the potential migration pathway would be from surface soil to subsurface soil caused by infiltrating precipitation. Contingency soil sampling will then be conducted to delineate the extent of contamination in surface soil at identified hot spots; potential subsurface soil contamination will be assessed through post-removal action confirmation sampling and is not addressed in this SAP.

5.1.6 Potential Exposure and Receptor Pathways

Potential human receptors exposed to soil at AOC 2 include:

- Current and future recreational users/visitors, trespassers, and maintenance workers (exposure to surface soil)
- Future adult/child residents, construction workers, recreational users/visitors, trespassers, and industrial workers (exposure to surface and subsurface soil)

These potential receptors may be exposed to site-related contaminants through incidental ingestion of, inhalation of particulates from, and dermal contact with site soil.

Potential ecological receptors exposed to surface soil and shallow subsurface soil at AOC 2 include lower trophic level terrestrial receptors (plants and soil invertebrates). Due to the small size of potentially contaminated areas on the site (potential source areas), exposures to upper trophic level receptors (birds and mammals) are not considered significant. The lower trophic level receptors may be exposed to site-related contaminants through root uptake from the soil (plants) and/or through direct contact with, and ingestion of, soil.

5.1.7 What are the data gaps?

Presently, there are several data gaps at AOC 2 that need to be addressed prior to conducting the removal action at Area 2. Based upon the available historical analytical data, the data gaps are the following:

- The valence state of chromium in soil is unknown
- The historical mercury results require confirmation due to uncertainties that have been raised
- No soil pH data were available for evaluating the historical iron results

In addition, the potential impact of contaminants to subsurface soil from the overlying debris at Area 2 is presently unknown. However, this supplemental soil sample collection addresses the previously listed data gaps, and the potential impact of contaminants to subsurface soil at Area 2 will be addressed as part of the future removal action at Area 2.

6 Data Quality Objectives/Systematic Planning Process Statements

(UFP-QAPP Manual Section 2.6.1 – Worksheet #11)

6.1 Project Statement and Objectives

The objective of the AOC 2 SI supplemental soil sample collection is to conduct a primary soil sample collection event to augment the current SI dataset for the purpose of updating the human health and ecological risk evaluations to determine whether arsenic, chromium, mercury, and iron at AOC 2 pose potentially unacceptable risks to human health and the environment, and to determine whether the removal action proposed for Area 2 needs to include any hot spot removal(s) for these constituents beyond the current Area 2 boundary depicted on **Figure 3**.

For the SI human health risk screening, the chromium valency was conservatively assumed to be hexavalent, and not the more likely trivalent form. This assumption needs to be confirmed through additional sampling, because if the chromium form is largely trivalent, then chromium, the primary carcinogenic risk driver, and arsenic would no longer be human health COPCs.

Regarding mercury (ecological COPC), the type of debris at AOC 2 does not appear to be a likely a mercury source, and the relatively even distribution of the mercury concentrations across the site has raised questions and created uncertainty with regard to the historical data. In addition, a chemist review of the historical mercury data identified data quality concerns. Therefore, new mercury data are needed to confirm the historical sample results.

Lastly, pH and new iron data are needed to determine whether iron poses a potential ecological risk, since pH data were not available in the historical data set evaluated in the SI.

Field activities will include collecting additional surface and subsurface soil samples at AOC 2. Specifically, surface and subsurface soil samples will be collected and analyzed for: (1) hexavalent and total chromium to determine the chromium valency; (2) mercury to confirm the historical mercury data concentrations; and (3) iron and pH to determine whether iron poses a potential ecological risk.

The following data will be used to update the SI human health and ecological risk screenings:

- Surface and subsurface soil analytical data evaluated during the SI, and surface and subsurface soil analytical data collected as part of the primary SI supplemental soil sample collection event. The mercury and iron analytical data collected at historical sample locations as part of the SI supplemental soil sample collection will be evaluated in lieu of the analytical data previously collected at these locations; all other newly collected soil data (chromium and pH) will supplement the existing data set.

If no soil hot spot(s) are identified, then the AOC 2 removal action will only include Area 2.

If soil hot spot(s) are identified from the primary event data, a contingency sampling event will occur. The contingency event, if needed, would include additional surface and/or subsurface soil sampling to delineate the extent(s) of any hot spot(s) for inclusion in the removal action EE/CA for Area 2. The contingency sampling locations would be determined based on the results of the primary event; the analyses would be the same as for the primary event, depending on the type of hot spot identified (for example, if a mercury hot spot is identified, the contingency samples collected to delineate it would be analyzed for mercury only).

6.1.1 Data Quality Objectives

Quantifiable analytical results will be the primary basis for project decisions. The limit of quantitation (LOQ), which is defined as the minimum concentration or quantity of a target analyte that can be reported with accurate quantitation, will be the metric to define whether an analytical result is quantifiable.

If an analyte is undetected at levels below the Project Action Limits (PALs) or if any detected analytes are below the PALs, then it will be assumed that the concentrations of these constituents do not pose an unacceptable risk and NFA for them will be necessary.

If the analytical results of samples determine that analytes are detected above the project-specific PALs, then the SI human health and ecological risk screenings will be updated to identify current COPCs at AOC 2 as follows:

Human Health Risk Decision Logic

As applicable, the results of the majority of SI supplemental soil sample collection data, with the exception of the mercury and iron soil data collected from historical locations (which will replace the previously collected analytical data at these locations) will be combined with the earlier soil sample data evaluated in the SI to update the SI human health risk screening to determine whether there are potentially unacceptable risks to human receptors:

- Soil concentrations will be compared to the USEPA residential soil Regional Screening Levels (RSLs) (RSLs based on noncarcinogenic effects will be based on a noncarcinogenic hazard of 0.1 to account for exposure to more than one constituent that affects the same target organ; RSLs based on carcinogenic endpoints will be based on a carcinogenic risk of 1×10^{-6}). If the maximum detected concentration of a constituent exceeds the applicable RSL, the constituent will be identified as a COPC.
- The metals concentrations in soil will be compared to the base background 95 percent upper tolerance limits (UTLs) (CH2M HILL, 2011) to determine whether the metals concentrations are associated with the site or are potentially attributable to background conditions. If the only COPCs are metals that are associated with background conditions, NFA or further assessment based on human health will be warranted for soil. If potentially unacceptable risks are not associated with background conditions, the Area 2 removal action will include “hot spot” removals of soil outside Area 2.

Ecological Risk Decision Logic

The results of the SI supplemental soil sample collection data (mercury and iron soil data collected from historical locations, which will replace the previously collected analytical data at these locations) will be combined with the earlier soil sample data evaluated in the SI to update the SI ecological risk screening to determine whether there are potentially unacceptable risks to ecological receptors:

- Soil constituent concentrations from each site sample (with a sample depth less than 24 inches bgs) will be compared to literature-based soil screening values for plants and/or soil invertebrates (surface [0 to 6 inches bgs] and shallow subsurface [6 to 24 inches bgs] data will be screened separately). Initial (Step 2) COPCs will include all constituents with a maximum hazard quotient (HQ) equaling or exceeding 1 based on a detected concentration and all detected constituents lacking screening values. Mean soil concentrations will also be compared with soil screening values (samples may be partitioned by spatial area when calculating means). If mean concentrations equal or exceed soil screening values, then the contaminant will be considered a refined (Step 3a) COPC. If it is below the soil screening values, the constituent will not generally be considered a COPC (the magnitude of the maximum HQ and the exceedance frequency will also be considered when making this determination) and NFA will be warranted for that constituent.

- If the ERA (through Step 3a) identifies soil COPCs, the COPC concentrations will be compared to the base soil background 95 percent UTLs (if available) to determine whether the detected concentrations are consistent with the base background concentrations. If all COPC concentrations are consistent with background, NFA or further assessment based on ecological receptors will be warranted for soil. If COPC concentrations exceed background, the constituent will be identified as a final Step 3a COPC and recommendations for additional investigation and/or action will be made in the EE/CA report.

6.2 What are the environmental questions to be answered?

The following environmental questions will be answered upon completion of the SI supplemental soil collection.

Is chromium a human health COPC in surface and subsurface soil?

In the SI, it was assumed that all of the chromium detected in the soil was in the hexavalent form, which is highly unlikely, and the calculated potentially unacceptable carcinogenic risk in surface and subsurface soil was primarily associated with chromium. If chromium is actually largely in the trivalent form, it would not be a COPC in either medium, and consequently, arsenic in surface and subsurface soil would not be identified as COPC, since the cumulative cancer risk would be below 5×10^{-5}. It is therefore likely that there are no potentially unacceptable carcinogenic risks associated with exposure to the surface and subsurface soil. However, hexavalent and total chromium soil data are warranted to supplement the SI data so the valency of chromium can be confirmed. The soil data will be used to determine the presence or absence of hexavalent chromium, and if present, the percentage of total chromium that is hexavalent at AOC 2.

The following work is proposed to answer this environmental question:

Two surface (0 to 6 inches) (**Figure 5**) and two subsurface (at 1 to 2 feet and 3.5 to 4 feet at CAA02-A2HA01 and CAA02-A2-TP03N, respectively)(**Figure 6**) soil samples will be collected and analyzed for total and hexavalent chromium. These data will be used to update the SI human health risk screening.

- If chromium is detected at sufficient concentrations in the hexavalent form, the conclusions of the SI remain valid. The CAX Partnering Team will discuss and agree to the location(s) of the hot spot(s) and contingency soil samples will be collected to delineate the extent(s) of the hot spot(s) for inclusion in the removal action EE/CA for Area 2. The analyses would be the same as for the primary event (if a chromium hot spot is identified, the contingency samples collected to delineate it would be analyzed for total and hexavalent chromium).
- If chromium is detected largely in the trivalent form, or the percentage of chromium detected in the hexavalent form would not result in an exceedence of the human health risk-based screening level for hexavalent chromium, chromium and arsenic are not COPCs and the Area 2 removal action would not include hot spot removals for them outside of Area 2.

Is mercury an ecological COPC in surface and/or subsurface soil?

Three surface soil samples and one subsurface soil sample (CAA02-A2DPB02, CAA02-A2DPB03, CAA02-A2DPB04, and CAA02-A2HA01, respectively) collected outside of Area 2 were evaluated in the SI and contained mercury at concentrations that exceeded ecological soil screening values and background UTLs. However, the type of debris at AOC 2 does not appear to be a likely a mercury source, and the relatively even distribution of the mercury concentrations across the site has raised questions and uncertainty regarding the historical data. In addition, a chemist review of the historical mercury data identified data quality concerns. Therefore, new data are needed to confirm the historical mercury results.

The following work is proposed to answer this environmental question:

Four surface (0 to 6 inches) and four subsurface (6 to 24 inches) samples will be collected and analyzed for mercury. The new mercury data will replace the historical data to update the SI ecological risk screening to determine whether mercury continues to be identified as a COPC. If mercury hot spot(s) are identified, the CAX Partnering Team will discuss and agree to the location of the hot spot(s) and contingency soil samples will be collected to delineate the extent of the hot spot(s) for inclusion in the removal action EE/CA for Area 2. The analysis would be the same as for the primary event (if a mercury hot spot is identified, the contingency samples collected to delineate it would be analyzed for mercury only).

Is iron an ecological COPC in surface and subsurface soil?

Based on the results of the SI ecological risk screening, iron was identified as a refined COPC in surface soil since concentrations exceeded the background UTL concentration and soil pH data were not available (CH2M HILL, 2012). Due to the absence of pH analytical data, additional iron and pH surface soil data are warranted to determine whether iron is an ecological COPC in soil. While iron was not identified in the SI Report as a refined COPC for subsurface soil based on the low magnitude of its background value exceedance (ratio of 1.31), collection of iron and pH data in subsurface soil is proposed to confirm that iron should not be a refined COPC. The new analytical results will be used to determine whether or not iron is a COPC in soil and will replace the historical results at their respective sample locations.

The following work is proposed to answer this environmental question:

Four surface (0 to 6 inches) and four subsurface (6 to 24 inches) samples will be collected and analyzed for iron and pH. These results will be used to update the SI ecological risk screening. If mercury hot spot(s) are identified, the CAX Partnering Team will discuss and agree to the location(s) of the hot spot(s) and contingency soil samples will be collected to delineate the extent(s) of the hot spot(s) for inclusion in the removal action EE/CA for Area 2. The analyses would be the same as for the primary event (if an iron hot spot is identified, the contingency samples collected to delineate it would be analyzed for iron and pH only).

6.3 Project Action Limits

The PALs are medium-specific standards and criteria chosen for evaluation to help provide a conservative assessment of site conditions and determine whether action is needed to address concentrations of chemicals present at the site. The detected data will be compared to the lower value of the following PALs to identify COPCs (PAL values are included in **Section 10**):

- Surface Soil:
  - USEPA RSLs for residential soil
  - Literature-based ESVs, such as USEPA Ecological Soil Screening Levels
  - Background soil values for inorganic constituents (CH2M HILL, 2011)
- Subsurface Soil:
  - USEPA RSLs for residential soil
  - Literature-based ESVs (if sample is collected at a depth of less than 2 feet bgs)
  - Background soil values for inorganic constituents (CH2M HILL, 2011)

Specific PAL values and laboratory detection and quantitation limits (QLs) are included in the Reference Limits and Evaluation Tables (**Section 10**).

6.3.1 How will the data be used?

The chromium analytical data will be used to update the SI human health risk screening for soil. If the chromium is found to be sufficiently in the hexavalent form, the AOC 2 human health risk conclusions of the

SI will remain valid, with chromium and arsenic identified as COPCs. In that case, the AOC 2 Area 2 removal action will include soil removal at designated hot spots for chromium outside of Area 2. Conversely, if the chromium is largely in the trivalent form and the concentrations of hexavalent chromium are below the PAL, chromium and arsenic will no longer be identified as COPCs in soil at AOC 2 and will not be considered for removal outside of Area 2.

The mercury and iron analytical data will replace the historical analytical data for these constituents and will be used to update the SI ecological risk screening for AOC 2[7]. Additionally, the soil pH data will be used as the soil ESV for iron to update the SI ecological risk screening.

6.3.2 What types of data are needed?

Section 8.1 contains detailed information on the types of data needed for this project, including sample locations and sample depth intervals. In general, soil sample analytical data are required to verify the valence state of chromium, to update the SI human health and ecological risk screenings, and to determine the potential need for additional hot spot removals outside of Area 2. All analytical samples will be submitted to an offsite, subcontracted laboratory for analysis. Refer to **Section 8.1 and Section 9** for sample locations, numbers, rationale, and methodology. Proposed sample locations are provided on **Figures 5 and 6**.

6.3.3 Are there any special data quality needs, field or laboratory, in order to support environmental decisions?

The data will be used to update the SI human health and ecological risk screenings and to make further investigation/action decisions; therefore, the DV will qualify data according to the Measurement Performance Criteria (MPC) outlined in **Section 7.1** for field QC samples and the Laboratory QC Samples Table in **Section 10** for laboratory QC samples. These MPC are consistent with the DoD Quality Systems Manual (QSM), as applicable, and laboratory in-house limits where the QSM does not apply.

The laboratory analytical data will be validated by CH2M HILL. This process is outlined in **Section 6.2.5**.

6.3.4 Where, when, and how should the data be collected/generated?

Detailed information on where, when, and how the data will be collected is provided in **Section 9**. Data generated at the subcontract laboratories will be reported in a data package equivalent to a USEPA Contract Laboratory Program Level IV deliverable. This data package includes a case narrative, all field sample results, QC forms, and raw data. An electronic data deliverable will also be required.

6.3.5 How will the data be evaluated?

Data will undergo an evaluation for quality and completeness at the laboratory and will be validated by CH2M HILL. Specific verification and validation steps are detailed in **Table 13-1**, *Data Verification and Validation (Steps I and IIa/IIb) Process Table* (**Section 13**). In general:

- Deviations from the SAP will be reviewed to assess whether CA is warranted and to assess impacts to the achievement of project objectives.
- To assess whether sufficient quantities of acceptable data are available for decision-making, the data will be reconciled with MPC following validation and review of data quality indicators (DQIs).
- For field duplicate sample results, the most conservative value will be used for project decisions.
- Field and laboratory precision will be compared as the Relative Percent Difference (RPD) between the two results.

[7] Although mercury and iron are not identified as human health COPCs, since the new data for these constituents will replace the existing SI data, the human health screening will be updated with the new mercury and iron data as well.

- For statistical calculations in the ERAs, non-detect values will be represented by a concentration equal to one-half the sample reporting limit (RL).

6.3.6 How will the data usability be documented?

The PM, PC, and other Team members will be responsible for compiling the data. The data will then be presented to the CAX Partnering Team, which will collectively evaluate the data usability according to project objectives. Any qualifications made to the data during data validation will be included for consideration; possible qualifications that may be applied to the data during validation are as follows:

- When major QC deficiencies are encountered, data will be qualified with an R, and in most cases considered not usable for project decisions. If R-qualified data are used in evaluations and, ultimately, project decisions, the rationale for their use will be included in the EE/CA report. The R-qualifier is defined as follows:
  - R = Rejected result. Result not reliable.
- For minor QC deficiencies that will not affect the usability of the data, data may be qualified as estimated with the following qualifiers: J, UJ, K, L, or UL. These qualifiers are defined as follows:
  - J = Analyte present. Reported value is estimated and may or may not be accurate or precise.
  - UJ = Analyte not detected. QL is estimated and may be inaccurate or imprecise.
  - K = Analyte present. Reported value may be biased high. Actual value is expected to be lower.
  - L = Analyte present. Reported value may be biased low. Actual value is expected to be higher.
  - UL = Analyte not detected. QL is probably higher.
- Additional qualifiers that may be applied to data by the DV are:
  - B = Not detected substantially above the level reported in laboratory or field blanks. This detection is attributed to blank contamination and is to be treated as a non-detect.
  - N = Tentative identification (ID). The analyte is considered present, though special methods may be needed to confirm its presence or absence in future sampling efforts.
  - NJ = Qualitative ID is questionable due to poor resolution. Presumptively present at approximate quantity.
  - U = Not detected.

Data usability will be documented in data tables and discussed in the data quality evaluation, both of which will be provided as part of the AOC 2 EE/CA. Data tables will reflect the reported concentrations of analytes, whether analytes were detected, and what, if any, data qualifiers accompany the results. The data quality evaluation will discuss the use of specific data qualifiers and their impact on decision-making, the overall quality of the data set, and any data usability limitations determined by the CAX Partnering Team.

7 Field Quality Control Samples

(UFP-QAPP Manual Section 2.6.2 – Worksheet #12)

7.1 Field Quality Control Samples

Field QC samples will be collected to assist in evaluating whether the results reported from the field event meet the precision, accuracy, and representativeness requirements for this project. Presented in **Table 7-1 and Table 7-2** are details about the frequency at which each QC sample will be collected, what constitutes acceptable field QC results, and what aspect of data quality is indicated by the outcome of each QC sample.

TABLE 7-1
Measurement Performance Criteria Table for Field QC Samples – Soil Metals

Matrix: Surface Soil, Subsurface Soil
Analytical Group: Select Metals and Hexavalent Chromium
Concentration Level: Medium/Low

QC Sample	Analytical Group	Frequency	DQIs	MPC
Field Duplicate	Select Metals and Hexavalent Chromium	1 per 10 field samples of similar matrix[1]	Precision	RPD ≤ 30%
Equipment Blank		1 per day of sampling for decontaminated equipment, 1 per lot of disposable equipment	Bias/Contamination	No target analytes detected > 1/2 LOQ
Cooler Temperature Indicator		1 per cooler to the laboratory	Representativeness	Temperature ≤ 6 degrees Celsius (°C)

Notes:
[1] Separate field duplicates will be collected for all media.

TABLE 7-2
Measurement Performance Criteria Table for Field QC Samples – Soil Wet Chemistry

Matrix: Surface Soil, Subsurface Soil
Analytical Group: Wet Chemistry (pH)
Concentration Level: Low/Medium

QC Sample	Analytical Group	Frequency	DQIs	MPC
Cooler Temperature Indicator	Wet Chemistry	1 per cooler to the laboratory	Representativeness	Temperature ≤ 6°C

This page intentionally left blank.

8 Sampling Design and Rationale

(UFP-QAPP Manual Section 3.1.1 - Worksheet #17)

8.1 Sampling Design and Rationale

The CAX Partnering Team met to scope the investigations outlined in **Section 4**. During these meetings, the Team discussed and agreed to the proposed sampling rationale for AOC 2. **Figures 5 and 6** present the proposed sample locations and media to be evaluated. Exact sample locations will ultimately be field-determined based on actual site conditions at the time of the field effort, but will be in close proximity to the proposed sample locations.

The proposed sampling schemes and associated rationale for AOC 2 are included in **Table 8-1**.

QC samples will be collected as described in **Section 7.1**.

Analytical methods to be employed by the laboratory for each analyte and their respective PALs are listed in **Section 10**.

Section 9 provides a detailed outline of the field methods to be performed.

TABLE 8-1
AOC 2 Proposed Sampling Design and Rationale

Media	Sample Depths	Analysis	Method	Sample Count	Rationale
Surface Soil	0-6 inches bgs	Select Metals (As[8] Cr, Fe, and/or Mercury Only)	SW846 6020B/7471 A	4	A removal action is planned for Area 2, where chromium detections in surface soil exceeded human health screening criteria during the SI. However, chromium detected outside of Area 2 also exceeded human health screening criteria, with the highest concentrations (29.4 and 39 milligrams per kilogram [mg/kg]) detected at historical sample locations CAA02-A2HA01 and CAA02-A2-DPB03, respectively. Two surface soil samples (0 to 6 inches bgs) will be collected at these historical sample locations and analyzed for hexavalent and total chromium to determine the relative proportions of chromium in hexavalent and trivalent forms. If the hexavalent form is detected, the percentage of hexavalent chromium can be determined from the detected total chromium concentration, and will be used to determine whether the AOC 2 removal action at Area 2 should include chromium hot spots outside Area 2. These data will also be used to update the SI human health risk screening. Mercury and iron concentrations in surface soil also exceeded ESVs and/or background UTLs outside Area 2 during the SI. Furthermore, since there are no historical soil pH data, iron was identified by default as a COPC in the SI Report (the soil ESV is pH-based). Since the mercury concentrations are fairly consistent and distributed evenly over the site, and because questions have been raised regarding the historical data quality for mercury, additional samples are proposed to determine whether mercury and iron should be ecological COPCs at AOC 2. Four surface soil samples (0 to 6 inches) will be collected at historical sample locations CAA02-A2HA01, CAA02-A2-DPB02, CAA01-A2-DPB03, and CAA02-A2-DPB04 (where the concentrations of mercury and iron were greatest outside Area 2) and analyzed for mercury, iron, and pH. The new analytical data will replace the historical data for these constituents and will be used to update the ecological risk screening. These data will also be used to determine whether the AOC 2 removal action at Area 2 should include mercury hot spots outside Area 2. If no soil hot spot(s) are identified, then the AOC 2 removal action will only include Area 2. If soil hot spot(s) are identified from the primary sampling event data, a contingency sampling event will occur. The contingency event, if needed, would include additional surface and/or subsurface soil sample collection to delineate the extent(s) of any hot spot(s) for inclusion in the removal action EE/CA for Area 2. The contingency sample locations would be determined based on the results of the primary event; the analyses would be the same as for the primary event, depending on the type of hot spot identified (for example, if a mercury hot spot is identified, the contingency samples collected to delineate it would be analyzed for mercury only).
		Hex Cr	SW846 7199	2	
		pH	SW-846-9045C	4	

Note:
[8] Arsenic will only be analyzed if needed for contingency sampling event

TABLE 8-1
AOC 2 Proposed Sampling Design and Rationale

Media	Sample Depths	Analysis	Method	Sample Count	Rationale
Subsurface Soil	Various Depths (6-24 inches, 12-24 inches, and 42-48 inches bgs	Select Metals (As[11], Cr, Fe, and/or Mercury Only)	SW846 6020B/7471 A	4	A removal action is planned for Area 2, where chromium detections in subsurface soil exceeded human health screening criteria during the SI. However, chromium detected outside of Area 2 also exceeded human health screening criteria, with the first and third highest concentrations detected at historical sample locations CAA02-A2HA01 (43.2 mg/kg) and CAA02-A2-TP03N (36.5 mg/kg) (Note: the second highest detection [38.8 mg/kg] was at location CAA02-A2-TP05N; however, it is within close proximity to CAA02-A2HA01). Two subsurface soil samples will be collected at historical sample locations CAA02-A2HA01 (from 1 to 2 feet bgs) and CAA02-A2-TP03N (from 3.5 to 4 feet bgs) and analyzed for hexavalent and total chromium to determine the relative proportions of chromium in hexavalent and trivalent forms. If the hexavalent form is detected, the percentage of hexavalent chromium can be determined from the detected total chromium concentration, and will be used to update the SI human health risk screening. These data will also be used to determine whether the AOC 2 removal action should include chromium hot spots outside Area 2. Mercury in subsurface soil also exceeded ESVs outside Area 2 during the SI at historical location CAA02-A2H01. However, since these concentrations were fairly consistent and distributed evenly over the site, and because questions have been raised regarding the historical data quality for mercury, additional samples are proposed to determine if mercury should be an ecological COPC at AOC 2. While iron was not identified as a refined COPC for subsurface soil, the collection of additional pH and iron data is proposed to confirm this determination. Four subsurface soil samples (6 to 24 inches) will be collected at historical sample locations CAA02-A2HA01, CAA02-A2-DPB02, CAA01-A2-DPB03, and CAA02-A2-DPB04 (where concentrations of mercury and iron were the greatest outside Areas 2) and analyzed for mercury, iron, and pH. The new analytical data will replace the historical data for these constituents and will be used to update the ecological risk screening. These data will also be used to determine whether the AOC 2 removal action should include mercury hot spots outside Area 2. If no soil hot spot(s) are identified, then the AOC 2 removal action will only include Area 2. If soil hot spot(s) are identified from the primary sampling event data, a contingency sampling event will occur. The contingency event, if needed, would include additional surface and/or subsurface soil sample collection to delineate the extent(s) of any hot spot(s) for inclusion in the removal action EE/CA for Area 2. The contingency sample locations would be determined based on the results of the primary event; the analyses would be the same as for the primary event, depending on the type of hot spot identified (for example, if a mercury hot spot is identified, the contingency samples collected to delineate it would be analyzed for mercury only).
		Hex Cr	SW846 7199	2	
		pH	SW-846-9045C	4	

This page intentionally left blank.

9 Field Project Implementation

9.1 Field Project Tasks

The following sections provide a summary of field activities.

9.1.1 Project Logistics

Prior to mobilization, NAVFAC Mid-Atlantic, USEPA, and VDEQ will be notified to allow for appropriate oversight and coordination. In addition, CH2M HILL will procure the following subcontractors to support investigation activities:

- Analytical laboratory
- Utility locator
- Investigation-derived waste (IDW) handler

In general, work will be performed in Level D personal protective equipment (PPE), which includes hard hat, safety glasses, safety-toed boots, hearing protection, and impermeable gloves. The criteria for upgrades to higher levels of PPE will be presented in the Health and Safety Plan (HASP), which will be prepared as part of mobilization efforts and available to all field personnel during field activities.

All field activities will be conducted during normal working hours unless otherwise requested by the Navy.

9.1.2 Field Project Tasks

Applicable Standard Operating Procedures (SOPs) for project tasks outlined in this section are listed in **Section 9.2**.

Fieldwork Preparation

Project instructions and a project-specific HASP for the primary and contingency, if needed, field events will be prepared. The field team, PM, AM, AQM, and PC will conduct a project kickoff meeting to discuss logistics and review the project instructions and HASP prior to mobilization.

Utility Clearance

Utility clearance at each site will be performed prior to the start of subsurface investigation activities. The CH2M HILL field staff will coordinate subsurface utility clearance with Miss Utility of Virginia ([800] 552-7001 or 811). In addition, a third-party utility clearance subcontractor will be procured by CH2M HILL to clearly mark utilities in the vicinity of all sampling locations. Any sampling location in close proximity to utility locations will be relocated to avoid potential impact to utilities while continuing to meet the intent of the sampling rationale.

Mobilization

Following approval of the SAP, CH2M HILL will begin mobilization activities. Before mobilization, all field team members will review this SAP and the project-specific HASP. A field team kickoff meeting will be held to ensure that personnel are familiar with the scope of the field activities and discuss any safety issues. Mobilization activities include coordination with Base personnel and preparation of field equipment.

Soil Sampling

The number of soil samples and laboratory analyses are outlined in **Tables 8-1 and 9-2**. All soil samples will be collected using a stainless-steel hand auger. Any relevant information pertaining to evidence of contamination or visual observations will be recorded in the sample log book. Samples will be homogenized in a stainless steel bowl prior to placement in the laboratory-prepared sample container. The SOPs to be used are referenced in **Section 9.2**.

If the primary field event data identify soil hot spot(s), soil samples will be collected during a contingency event to delineate the area of impacted soil at the identified hot spot(s).
The number and location of the contingency soil samples will be based on the results of the primary sampling event and will be established by the CAX Partnering Team.

Equipment Decontamination

All non-disposable sampling equipment will be decontaminated before and immediately after each use, as described in the applicable SOPs referenced in **Section 9.2**. Equipment will be decontaminated with Liquinox (or an equivalent solution) and allowed to dry between each use. All decontamination liquids will be containerized and handled according to the following IDW handling section. Disposable equipment (such as paper towels and disposable PPE) will be disposed as solid waste.

No heavy equipment will be used. Therefore, the need for a decontamination pad to prevent runoff of the decontamination wash water and to allow easy collection of decontamination fluids for treatment as IDW is not necessary.

Investigation-derived Waste Handling

All IDW generated during this project is anticipated to be non-hazardous; however, it will be characterized in order to ensure it is transported and disposed in accordance with all pertinent regulations.

The IDW generated during soil sampling will be solutions used to decontaminate non-disposable sampling equipment. Aqueous IDW will be containerized separately in a Department of Transportation-approved 55-gallon drum, which will be stored onsite. Secondary containment for IDW storage will be large enough to contain 10 percent of the volume of containers or the volume of the largest container, whichever is greater. The IDW storage area will be covered with a tarp to minimize potential exposure to the drum and to prevent rain water from accumulating in the secondary containment. It is anticipated that one drum of aqueous IDW will be generated.

Unless there is evidence of gross contamination, one sample will be collected for the purpose of IDW characterization. This sample will be analyzed for the full Toxicity Characteristic Leaching Procedure list and ignitability, corrosivity, and reactivity. All drums will be removed from the site within 90 days of generation (with Navy approval).

Disposable equipment, including PPE and paper towels, will be disposed as ordinary trash.

Surveying

Following sample collection, soil sample locations will be marked in the field using stakes, with the sample station clearly labeled. All soil sample locations will be horizontally located by CH2M HILL personnel using a global positioning system (GPS).

Quality Control

QC samples will be collected as outlined in **Section 12**. Field and laboratory activities will be implemented following the applicable SOPs, as referenced in **Section 9.2 and Section 11**.

9.2 Field SOPs Reference Table

(UFP-QAPP Manual Section 3.1.2 – Worksheet #21)

Applicable SOPs for project tasks are listed in **Table 9-1** and the SOPs are included as **Appendix A.**

TABLE 9-1
Field SOPs Reference Table

SOP Reference Number	Title/Author	Revision Date or Version Number	Location of SOP	Any planned deviation for Project Work	Comments
1_BlankPrep	Equipment Blank and Field Blank Preparation	8/2013	\\orion\Proj\CLEANII\SOPS\1 - MASTER\Sample Preparation and Handling	Not applicable (N/A)	N/A
2_COC	Chain of Custody	8/2013	\\orion\Proj\CLEANII\SOPS\1 - MASTER\Sample Preparation and Handling	N/A	N/A
3_Decon	Decontamination of Personnel and Equipment	8/2013	\\orion\Proj\CLEANII\SOPS\1 - MASTER\Decontamination	N/A	N/A
4_DrumSamp	Sampling Contents of Tanks and Drums	8/2013	\\orion\Proj\CLEANII\SOPS\1 - MASTER\Other	N/A	N/A
5_Dispose	Disposal of Waste Fluids and Solids	8/2013	\\orion\Proj\CLEANII\SOPS\1 - MASTER\Decontamination	N/A	N/A
6_GPS	Global Positioning System	8/2013	\\orion\Proj\CLEANII\SOPS\1 - MASTER\Other	N/A	N/A
7_Homog	Homogenization of Soil and Sediment Samples	8/2013	\\orion\Proj\CLEANII\SOPS\1 - MASTER\Sample Preparation and Handling	N/A	N/A
8_Log Books	Preparing Field Log Books	8/2013	\\orion\Proj\CLEANII\SOPS\1 - MASTER\Log Books	N/A	N/A
9_MiniRAE	Mini RAE Photoionization Detector	8/2013	\\orion\Proj\CLEANII\SOPS\1 - MASTER\Health and Safety	N/A	N/A
10_SBLog	Logging of Soil Borings	8/2013	\\orion\Proj\CLEANII\SOPS\1 - MASTER\Soil Sampling	N/A	N/A
11_ShipLowConc	Packaging and Shipping Procedures for Low-Concentration Samples	8/2013	\\orion\Proj\CLEANII\SOPS\1 - MASTER\Sample Preparation and Handling	N/A	N/A
12_SoilSamplExc	Soil Sampling	8/2013	\\orion\Proj\CLEANII\SOPS\1 - MASTER\Soil Sampling	N/A	N/A
13_Utility Location	Locating and Clearing Underground Utilities	8/2013	\\orion\Proj\CLEANII\SOPS\1 - MASTER\Utility Location	N/A	N/A

This page intentionally left blank.

9.3 Field Project Implementation (Field Project Instructions)

(UFP-QAPP Manual Sections 3.1.1 and 3.5.2.3 – Worksheets #18, 19, 20 and 30)

Soil samples collected as part of the SI supplemental soil sample collection will be analyzed as outlined in **Table 9-2**.

TABLE 9-2
Primary Event Sample Details Table

Contract Task Order 056
CAX AOC 2

Main Laboratory [1]
Katahdin Laboratory 600 Technology Way
Scarborough, Maine 04074
POC Jennifer Obrin
Direct - 207.874.2400 x17
Fax - 207.775.4029

Hexavalent Cr Laboratory
Columbia Analytical Services (for 7199 only)
1565 Jefferson Road; Building 300; Suite 360
Rochester, NY 146231
POC: Deb Patton 585.288.5380

					Solid				Aqueous		
				Analysis Group	Select Metal (Cr, and Iron only)	Mercury	Hex Cr	pH	Total Metal (Cr, and Iron only)	Mercury	Hex Cr
				Analytical laboratory	Katahdin	Katahdin	ALS-Rochester	Katahdin	Katahdin	Katahdin	ALS-Rochester
				Preparation and Analytical Method	SW-846 6010C	SW-846 7471A (Hg)	SW-846-7199	SW-846 9045D (pH)	SW-846 6010C	SW-846 7470A (Hg)	SW-846 7199
				Container Type/ Volume required (if different than container volume)	Share 1 of 4-ounce (oz) jar		1-4-oz wide mouth (2.5 grams [g])	Share with METAL	Share 1 of 250-milliliter (ml) high-density polyethylene (HDPE)		250-ml HDPE (10 ml)
				Preservative	Cool to 0-6ºC				HNO3 to pH < 2		1 of 125-ml HDPE
				Holding Time (Preparation/ Analysis) [2]	6 months (2 g)	28 days (0.6 g)	30 days, 168 hours (2.5 g)	As soon as possible (20 g)	6 Months (50 ml)	14 days (25 ml)	24 Hours
Matrix	**Station ID**	**Sample ID[4]**	**QC Sample [3]**	**Sampling Depth**							
AOC 2 Surface Soil Samples											
SS	CAA02-A2HA01	CAA02-A2-HA01-00-MMYY	-	0 - 6'' bgs	**X**	**X**	**X**	**X**			
	CAA02-A2HA01	CAA02-A2-HA01-00P-MMYY	FD		**X**	**X**	**X**	**X**			
	CAA02-A2HA01	CAA02-A2-HA01-00-MMYY-MS	MS		**X**	**X**	**X**				
	CAA02-A2HA01	CAA02-A2-HA01-00-MMYY-SD	SD		**X**	**X**	**X**				
	CAA02-A2DPB03	CAA02-A2-DPB03-00-MMYY	-		**X**	**X**	**X**	**X**			
	CAA02-A2DPB02	CAA02-A2-DPB02-00-MMYY	-		**Fe Only**	**X**		**X**			
	CAA02-A2DPB04	CAA02-A2-DPB04-00-MMYY	-		**Fe Only**	**X**		**X**			
AOC 2 Subsurface Soil (SB) Samples											
SB	CAA02-A2HA01	CAA02-A2-HA01-0102-MMYY		1-2' BGS	**Cr Only**		**X**				
		CAA02-A2-HA01-0H02-MMYY		6-24" BGS	**Fe Only**	**X**		**X**			
	CAA02-A2TP03N	CAA02-A2-TP03-N-MMYY		3.5-4' BGS	**Cr Only**		**X**				
	CAA02-A2TP03N	CAA02-A2-TP03-NP-MMYY	FD	3.5-4' BGS	**Cr Only**		**X**				
	CAA02-A2DPB02	CAA02-A2-DPB02-03-MMYY		6-24" BGS	**Fe Only**	**X**		**X**			
	CAA02-A2DPB03	CAA02-A2-DPB03-03-MMYY		6-24" BGS	**Fe Only**	**X**		**X**			
	CAA02-A2DPB04	CAA02-A2-DPB04-03-MMYY		6-24" BGS	**Fe Only**	**X**		**X**			
		CAA02-A2-DPB04-03-MMYY-MS	MS	6-24" BGS	**Fe Only**	**X**					
		CAA02-A2-DPB04-03-MMYY-SD	SD	6-24" BGS	**Fe Only**	**X**					
QA/QC											
	CAA02	CAA02-EBMMDDYY	EB						**X**	**X**	**X**

Notes:
[1] Samples are shipped directly to the laboratory performing analysis. Hex Cr will be shipped directly to Columbia Analytical Services (CAS).
[2] Maximum holding time is calculated from the time the sample is collected to the time the sample is prepared/analyzed.
[3] Field QC counts may change depending on the duration of field event. Frequency of QA/QC sample collection is noted on **Worksheet #12** of the Uniform Federal Policy (UFP)-SAP and is as follows :
FD - Field duplicate; one per 10 field samples
Matrix spike (MS)/matrix spike duplicate (MSD) - One pair per 20 field samples of similar matrix (including field duplicates)
EB- Equipment blank; for disposable equipment, one per week of sampling; for decontaminated equipment, one per type of sampling equipment, per day of sampling
Field Blank - No field blanks will be collected for this project
Trip Blank - No Trip Blank will be collected for AOC 2
(Number of samples shown is for the primary event. If the contingency event is conducted, the same MPC previously listed will apply)
[4] Sample IDs contain placeholders:
BD is to be replaced with the bottom depth
TDBD is to be replaced with the top depth and bottom depth of the sample collected
MMYY is to be replaced with the 2-digit month and 2-digit year in which the sample was collected;
MMDDYY is to be replaced with the 2-digit month, day, and year in which the sample was collected;
Sample locations and associated sampling information included in table is for the primary sampling event only, because the contingency sample number, location, analyses, and depth will be dependent upon the results of the primary sampling event. If soil hot spots are identified from the primary results, contingency sampling will occur to delineate said hot spot(s).

This page intentionally left blank.

10 Reference Limits and Evaluation Tables

(UFP-QAPP Manual Section 2.8.1 – Worksheet # 15)

Samples will be collected and analyzed for the analytical groups and methods detailed in **Table 9-2**, *Sample Details Table*. The PALs and laboratory RLs for each analyte from these samples are provided in the Reference Limits and Evaluation Tables (**Tables 10-1A through 10-1B**).

TABLE 10-1A
Reference Limits and Evaluation Table – Soil Metals
Matrix: Surface Soil, Subsurface Soil

Analytical Group: Metals

Analyte	CAS No.	PALs[1]				Project Quantitation Limit (PQL) Goal[2] (mg/kg)	Laboratory-specific Limits			Laboratory Control Sample (LCS) and MS/MSD Recovery Limits		
		RSLs[3] (mg/kg)	Surface Soil Back-ground[4] (mg/kg)	Subsurface Soil Back-ground[4] (mg/kg)	ESV[5] (mg/kg)		LOQ (mg/kg)	Limit of Detection (LOD) (mg/kg)	Detection Limit (DL) (mg/kg)	Lower Control Limit (%)	Upper Control Limit (%)	RPD (%)
Arsenic	7440-38-2	0.61	6.36	5.54	18.0	0.3	0.5	0.4	0.15	80	120	20
Chromium III and compounds	16065-83-1	12,000	NC	NC	0.64	0.32	0.5	0.5	0.5	80	120	20
Chromium	7440-47-3	0.29	18.2	33.7	64	0.145	1.5	0.4	0.03	80	120	20
Chromium (hexavalent)	18540-29-9	0.29	NC	NC	0.4	0.145	0.4	0.2	0.065	80	120	20
Iron	7439-89-6	5500	19900	32000	5 < pH > 8	2750	10	8	1.4	80	120	20
Mercury	7439-97-6	2.3	0.111	NC	0.1	0.05	0.033	0.017	0.0052	80	120	20

[1] PALs were developed to be protective of human health and the environment. Refer to **Section 6.3** for a discussion on PAL development and **Table 9-2** for specifics about which samples will be analyzed for which metals. Note that while arsenic is not part of the scope for the samples in Table 9-2, arsenic is included in this table because it may be part of the scope for contingency samples.
[2] PQL Goals are half of the most conservative PAL.
[3] RSLs are from the USEPA RSLs for Residential Soil, November 2013, RSLs based on noncancerous effects are based on a hazard of 0.1 to account for exposure to multiple constituents that effect the same target organ (for example, the liver). Analytical data will be compared to the most recent version of the RSLs at the time that analytical data are available for use.
[4] Background values are 95 percent UTL or the max background value if the 95 percent UTL was evaluated. CAX Background levels will be compared to data for surface and subsurface soil as appropriate. Values are from Final Background Study Report, WPNSTA Yorktown, Yorktown, Virginia, and CAX, Williamsburg, Virginia. (CH2M HILL, 2011).
[5] Ecological Surface Soil Screening Values are compiled from relevant literature sources.
NC indicates that there is no criterion for an analyte.
Gray shading indicates instances where the PAL is lower than the LOD. Non-detects will not be treated as exceedances, though they will be reported at a value greater than the PAL.

TABLE 10-1B
Reference Limits and Evaluation Table – Soil Wet Chemistry

Matrix: Surface Soil, Subsurface Soil
Analytical Group: Wet Chemistry

Analyte	CAS No.	Project Indicator Limit (PIL)[1]	Laboratory Specific Limits		
			LOQ	LOD	DL
pH	PH	5 < pH > 8	N/A	N/A	N/A

[1] pH will be used as a project indicator value. The ESV for iron (not toxic if soil pH is between 5 and 8) is based on soil pH, not chemical concentration; therefore, pH data are used directly to evaluate this metal in surface (0 to 6 inches) and subsurface (6 to 24 inches) soil.

[2] QLs and DLs are N/A to pH analysis.

N/A indicates that information is not applicable to this analysis.

11 Analytical SOP References Table

(UFP-QAPP Manual Section 3.2.1 – Worksheet #23)

Information regarding the laboratory SOPs and to be used for the handling and analysis of samples is provided in Analytical SOP References Table, **Table 11-1**.

TABLE 11-1
Analytical SOP References Table
Laboratory Name and Address: Katahdin Analytical Services, Inc.
600 Technology Way
Scarborough, ME 04074

POC: Greg Lull
Telephone Number: (207) 874-2400

Laboratory SOP Number	Title, Revision Date, and/or Number	Last Reviewed	Definitive or Screening Data	Matrix and Analytical Group	Instrument	Organization Performing Analysis	Variance to QSM	Modified for Project Work
CA-101	*Equipment Maintenance, 09/11, Revision 10.*	09/2011	N/A	N/A	Various	Katahdin	none	no
CA-604	*Acid Digestion of Aqueous Samples By USEPA Method 3010 for ICP and ICP-MS Analysis of Total or Dissolved Metals, 04/10, Revision 5.*	02/2012	Definitive	SS, SB/ METAL	Block Digester		none	no
CA-605	*Acid Digestion Of Solid Samples By USEPA Method 3050 For Metals Analysis By ICP-AES And GFAA, 09/10, Revision 5.*	02/2012	Definitive	SS, SB / METAL	Block Digester		none	no
CA-608	*Trace Metals Analysis By ICP-AES Using USEPA Method 6010, 04/12, Revision 13.*		Definitive	SS, SB / METAL	Inductively Coupled Plasma (ICP) – Atomic Emission Spectroscopy (AES)		Post-digestion Spike (PDS) CA refer to **Worksheet #28 (Table 12-1)**	no
CA-611	*Digestion And Analysis Of Solid Samples For Mercury By USEPA Method 7471, 04/12, Revision 9.*		Definitive	SS, SB / METAL	Mercury Analyzer		none	no

TABLE 11-1
Analytical SOP References Table

Laboratory Name and Address: Katahdin Analytical Services, Inc.
600 Technology Way
Scarborough, ME 04074

POC: Greg Lull

Telephone Number: (207) 874-2400

Laboratory SOP Number	Title, Revision Date, and/or Number	Last Reviewed	Definitive or Screening Data	Matrix and Analytical Group	Instrument	Organization Performing Analysis	Variance to QSM	Modified for Project Work
CA-615	*Digestion And Analysis Of Aqueous Samples For Mercury By USEPA Method 7470, 04/12, Revision 7.*		Definitive	SS, SB / METAL	Mercury Analyzer		none	no
CA-709	*pH Concentration Measurements In Soil Matrices – SW 846 Method 9045, 05/12, Revision 9.*		Screening	SS, SB / WCHEM	pH Meter		none	no
SD-902	*Sample Receipt and Internal Control, 09/10, Revision 9.*	12/2011	N/A	All	N/A		none	no
SD-903	*Sample Disposal, 05/09, Revision 4.*	12/2011	N/A	All	N/A		none	no
GEN-7199	*Hexavalent Chromium by Ion Chromatography, Rev. 3, 1/13/11*	1/5/2012	Definitive	SS, SB / METAL	Ion Chromatograph		none	no
GEN-3060	*Alkaline Digestion for Hexavalent Chromium in Soil, Rev. 2, 1/6/11*	1/5/2012	Prep	SS, SB / METAL	Prep	CAS	none	no
SMO-GEN	*Sample Receiving, Revision 6, 10/22/10*	1/20/2012	N/A	All	N/A		none	no
SMO-SPLDIS	*Sample Disposal, Revision 4, 8/10/09*	10/6/2011	N/A	All	N/A		none	no

12 Laboratory QC Samples Table

(UFP-QAPP Manual Section 3.4 – Worksheet #28)

Laboratories analyzing samples in support of this work will perform laboratory QC samples at the frequency required by the DoD QSM 4.1. Details regarding each laboratory QC sample are provided in the Laboratory QC Samples Tables, **Table 12-1 through Table 12-2**.

TABLE 12-1
Laboratory QC Samples Table – Soil Metals

Matrix: SS, SB

Analytical Group: METAL

Analytical Method / SOP Reference: SW-846 6010C, 7471A, 9012B, 7199 / CA-608, CA-611, CA-773, GEN-7199

QC Sample	Frequency	Method/SOP QC Acceptance Limits[1]	CA	Person Responsible for CA	DQI	MPC
Target Analyte List METALs via 6010C						
Method Blank	One per preparatory batch.	No analytes detected >1/2 LOQ and >1/10 sample concentration or >1/10 regulatory limit (whichever is greater). Blank result must not otherwise affect sample results. For common laboratory contaminants (Na, Ca, Mg, K), no analytes detected >LOQ.	Investigate source of contamination, correct the problem. Rerun method blank prior to analysis of samples. If acceptance limits are still not met and sample material available, reprep and reanalyze affected samples.	Analyst	Contamination	Same as Method/ SOP QC Acceptance Limits
Interference Check Solutions (ICSs)	At the beginning of an analytical run.	ICS-A: Absolute value of concentration for all non-spiked analytes <LOD (unless they are a verified trace impurity from one of the spike analytes). ICS-AB: Within ±20 percent of true value.	Terminate analysis; locate and correct problem; reanalyze ICS; reanalyze all samples		Accuracy	
LCS	One per preparatory batch.	Refer to reference limits and evaluation table	Correct problem, then reprep and reanalyze the LCS and all samples in the associated preparatory batch for failed analytes, if sufficient sample material is available. Refer to Appendix G of DoD QSM v. 4.2. If reanalysis cannot be performed, data must be qualified and explained in the case narrative.		Accuracy	

TABLE 12-1
Laboratory QC Samples Table – Soil Metals
Matrix: SS, SB
Analytical Group: METAL
Analytical Method / SOP Reference: SW-846 6010C, 7471A, 9012B, 7199 / CA-608, CA-611, CA-773, GEN-7199

QC Sample	Frequency	Method/SOP QC Acceptance Limits[1]	CA	Person Responsible for CA	DQI	MPC
MS	One per preparatory batch per matrix.	Same as LCS	If LCS within criteria, no CA, otherwise, examine the project-specific DQOs. Contact the client as to additional measures to be taken.		Accuracy	
MSD	One per preparatory batch per matrix.	Same as MS and refer to reference limits and evaluation table	Same as MS.	Analyst	Accuracy, Precision	
Serial Dilution	One per preparatory batch.	Five-fold dilution must agree with ±10 percent of the original measurement. Only applicable for samples with concentrations >50X LOQ.	Perform PDS addition		Accuracy	
PDS	When dilution test fails or analyte concentration in all samples <50X LOD.	Recovery within 75-125 percent recovery (%R).	Run all associated samples in the preparatory batch by method of standard additions (MSA).		Accuracy	
Results between DL and LOQ	N/A	Apply J-qualifier to results between DL and LOQ. Nondetect results are reported as U-Values at the LOD.	N/A		Accuracy	
Mercury via 7471A						
Method Blank	One per preparatory batch.	No analytes detected >1/2 LOQ and >1/10 sample concentration or >1/10 regulatory limit (whichever is greater). Blank result must not otherwise affect sample results	Investigate source of contamination, correct the problem. Rerun method blank prior to analysis of samples. If acceptance limits are still not met and sample material available, reprep and reanalyze affected samples.	Analyst	Contamination	Same as Method/ SOP QC Acceptance Limits

TABLE 12-1
Laboratory QC Samples Table – Soil Metals
Matrix: SS, SB
Analytical Group: METAL
Analytical Method / SOP Reference: SW-846 6010C, 7471A, 9012B, 7199 / CA-608, CA-611, CA-773, GEN-7199

QC Sample	Frequency	Method/SOP QC Acceptance Limits[1]	CA	Person Responsible for CA	DQI	MPC
LCS	One per preparatory batch.	Refer to reference limits and evaluation table	Correct problem, then reprep and reanalyze the LCS and all samples in the associated preparatory batch for failed analytes, if sufficient sample material is available. Refer to Appendix G of DoD QSM v. 4.2. If reanalysis cannot be performed, data must be qualified and explained in the case narrative.		Accuracy	
MS	One per preparatory batch per matrix.	Same as LCS	Examine the project-specific DQOs. If the MS falls outside of DoD criteria, additional QC tests are required to evaluate matrix effects (that is, run all affected samples by MSA).		Accuracy	
MSD	One per preparatory batch per matrix.	Same as MS and refer to reference limits and evaluation table	Same as MS.		Accuracy, Precision	
Results between DL and LOQ	N/A	Apply J-qualifier to results between DL and LOQ. Nondetect results are reported as U-Values at the LOD.	N/A		Accuracy	
Hexavalent Chromium via SW-846 7199						
Method Blank	One per preparatory batch of 20 or fewer samples	No analytes detected >1/2 LOQ.	Investigate source of contamination, correct the problem. Rerun method blank prior to analysis of samples. If acceptance limits are still not met and sample material available, reprep and reanalyze affected samples.	Analyst	Contamination	Same as Method/ SOP QC Acceptance Limits

TABLE 12-1
Laboratory QC Samples Table – Soil Metals

Matrix: SS, SB

Analytical Group: METAL

Analytical Method / SOP Reference: SW-846 6010C, 7471A, 9012B, 7199 / CA-608, CA-611, CA-773, GEN-7199

QC Sample	Frequency	Method/SOP QC Acceptance Limits[1]	CA	Person Responsible for CA	DQI	MPC
LCS	One per preparatory batch of 20 or fewer samples	Refer to reference limits and evaluation table	Redigest if possible. If samples are out of holding time, redigest and report both sets of data. If insufficient sample is available to redigest, qualify. If the LCS recoveries are high and the sample results are <LOQ narrate.		Accuracy	
MS	One per preparatory batch of 20 or fewer samples	Same as LCS	Redigest entire batch unless spike is diluted out (sample result >4x spike concentration). If redigest fails, contact client about possible matrix investigations. If samples are out of holding time, redigest and report both sets of data. If insufficient samples is available to redigest, qualify results associated with the out of control MS.		Accuracy	
Laboratory Replicate (LR) or MSD	One per preparatory batch of 20 or fewer samples	Same as MS and refer to reference limits and evaluation table	Repeat sample and duplicate unless obvious or historical interferences (or insufficient volume).		Accuracy, Precision	
PDS	One per preparatory batch of 20 or fewer samples	Recovery within 85-115%R.	Same as MS.		Accuracy	
Results between DL and LOQ	N/A	Apply J-qualifier to results between DL and LOQ. Nondetect results are reported as U-Values at the LOD.	N/A		Accuracy	

Notes:

[1] Specifications are consistent with DoD QSM version 4.2.

TABLE 12-2
Laboratory QC Samples Table – Soil WCHEM (pH)

Matrix: SS, SB

Analytical Group: WCHEM

Analytical Method / SOP Reference: SW-846 9045D

QC Sample	Frequency	Method/SOP QC Acceptance Limits[1]	CA	Person Responsible for CA	DQI	MPC
LCS	One per preparatory batch.	90-110%R	Correct problem, recalibrate, reanalyze.	Analyst	Accuracy	Same as Method/ SOP QC Acceptance Limits
LR	One per 10 samples.	<20% RPD	Investigate problem and reanalyze sample in duplicate. If RPD is still unacceptable, report original result and narrate.		Precision	

Notes:

[1] Specifications are consistent with DoD QSM version 4.2.

TABLE 12-3
Laboratory QC Samples Table

Matrix: Soil (surface and subsurface)

Analytical Group: METALs (refer to **Table 10-1A** for a specific list of analytes by this method)

Analytical Method/SOP Reference: SW-846 6010C/GR-01-100

Matrix	Analytical Group	No. of Sampling Locations	No. of Field Duplicates	No. of MS/MSDs	No. of Field Blanks	No. of Equip. Blanks[1]	No. of VOC Trip Blanks	Total No. of Samples to Laboratory
Surface soil	Metals	4	1	1/1	-	1	-	8
	pH	4	-	-	-	-	-	4
Subsurface Soil	Metals	6	1	1/1	-	1	-	10
	pH	4	-	-	-	-	-	4

Notes:

[1]The number of equipment blanks may vary; equipment blanks are collected at a frequency of one per type of sampling equipment, per day of sampling. However, it is anticipated sample collection will take 1 day.

13 Data Verification and Validation (Steps I and IIa/IIb) Process Table

(UFP-QAPP Manual Section 5.2.1, UFP-QAPP Manual Section 5.2.2, Figure 37 UFP-QAPP Manual, Table 9 UFP-QAPP Manual – Worksheets #34, 35, 36)

Data will be collected and reviewed for quality and completeness as detailed in **Table 13-1**, the *Data Verification and Validation (Steps I and IIa/IIb) Process Table* as follows. More information about data validation and usability is provided in **Section 6.2.5**.

TABLE 13-1
Data Verification and Validation (Steps I and IIa/IIb)[1] Process Table

Data Review Input	Description	Responsible for Verification/Validation	Internal/ External[2]
Chains of Custody and Shipping Forms	Chain-of-custody forms and shipping documentation will be reviewed internally upon their completion and verified against the packed sample coolers they represent. The shipper's signature on the chain of custody will be initialed by the reviewer, a copy of the chain of custody will be retained in the site file, and the original and remaining copies taped inside the cooler for shipment. Chains of custody will also be reviewed for adherence to the SAP by the PC.	FTL/CH2M HILL PC/CH2M HILL	Internal and External
Sample Condition upon Receipt	Any discrepancies, missing, or broken containers will be communicated to the PC in the form of laboratory logins.	PC/CH2M HILL	External
Documentation of Laboratory Method Deviations	Laboratory Method Deviations will be discussed and approved by the PC. Documentation will be incorporated into the case narrative, which becomes part of the final hardcopy data package.	PC/CH2M HILL	External
Electronic Data Deliverables	Electronic Data Deliverables will be compared against hardcopy laboratory results (10 percent check).	PC/CH2M HILL	External
Case Narrative	Case narratives will be reviewed by the DV during the data validation process. This is verification that they were generated and applicable to the data packages.	DV/CH2M HILL	External
Laboratory Data	All laboratory data packages will be verified internally by the laboratory performing the work for completeness and technical accuracy prior to submittal.	Respective Laboratory QAO	Internal
Laboratory Data	The data will be verified for completeness by the PC.	PC/CH2M HILL	External
Audit Reports	Upon report completion, a copy of all audit reports will be placed in the site file. If CAs are required, a copy of the documented CA taken will be attached to the appropriate audit report in the QA site file. Periodically, and at the completion of site work, site file audit reports and CA forms will be reviewed internally to ensure that all appropriate CAs have been taken and that CA reports are attached. If CAs have not been taken, the site manager will be notified to ensure action is taken.	PM/CH2M HILL PC/CH2M HILL	Internal
CA Reports	CA reports will be reviewed by the PC or PM and placed into the project file for archival at project closeout.	PM/CH2M HILL PC/CH2M HILL	External

TABLE 13-1
Data Verification and Validation (Steps I and IIa/IIb)[1] Process Table

Data Review Input	Description	Responsible for Verification/Validation	Internal/ External[2]
Laboratory Methods	Ensure the laboratory analyzed samples using the correct methods.	PC/CH2M HILL	External
Target Compound List and Target Analyte List	Ensure the laboratory reported all analytes from each analysis group.	PC/CH2M HILL	External
RLs	Ensure the laboratory met the PQLs. If QLs were not met, the reason will be determined and documented.	PC/CH2M HILL	External
Field SOPs	Ensure that all field SOPs were followed.	FTL/CH2M HILL	Internal
Laboratory SOPs	Ensure that approved analytical laboratory SOPs were followed.	Respective Laboratory QAO	External
Raw Data	10 percent review of raw data to confirm laboratory calculations.	DV/CH2M HILL	External
Onsite Screening	All non-analytical field data will be reviewed against SAP requirements for completeness and accuracy based on the field calibration records.	FTL/CH2M HILL	Internal
Documentation of Method QC Results	Establish that all required QC samples were run.	DV/CH2M HILL	External
Documentation of Field QC Sample Results	Establish that all required QC samples were run.	PC/CH2M HILL	Internal
DoD Environmental Laboratory Accreditation Program (ELAP) Evaluation	Ensure that each laboratory is DoD ELAP-certified for the analyses they are to perform. Ensure evaluation timeframe does not expire.	PC/CH2M HILL	External
Analytical data validation for Metals, Mercury, and Hexavalent Chromium	Analytical methods and laboratory SOPs as presented in this SAP will be used to evaluate compliance against QA/QC criteria. Should adherence to QA/QC criteria yield deficiencies, data may be qualified. The data qualifiers used are those presented in *Region 3 Modifications to the National Functional Guidelines for Organic Data Review* (USEPA, 1994) and in *Region 3 Modifications to the Laboratory Data Validation Guidelines for Inorganic Data Review* (USEPA, 1993). National Functional Guidelines will not be used for data validation; however, the specific qualifiers listed therein may be applied to data should non-conformances against the QA/QC criteria as presented in this SAP be identified.	DV/CH2M HILL	External
Data Validation (WCHEM)	Wet chemistry (Natural Attenuation Indication Parameters), pH analytical data will not undergo third-party data validation, but are subject to all other previously detailed data review.	N/A	N/A

Notes:

1 Verification (Step I) is a completeness check that is performed before the data review process continues in order to determine whether the required information (complete data package) is available for further review. Validation (Step IIa) is a review that the data generated are in compliance with analytical methods, procedures, and contracts. Validation (Step IIb) is a comparison of generated data against MPC in the SAP (both sampling and analytical).

2 Internal or external is in relation to the data generator.

Should CH2M HILL find discrepancies during the verification or validation procedures previously detailed, an e-mail documenting the issue will be circulated to the internal project team, and a Corrections-to-File Memorandum will be prepared identifying the issues and the CA needed. This memorandum will be sent to the laboratory, or applicable party, and maintained in the project file.

14 References

Baker Environmental, Inc. (Baker). 1999. *Final Field Investigation Report, Site 1 and AOC 2, Naval Weapons Station Yorktown, Yorktown, Virginia, Cheatham Annex Site.* September.

Baker. 2001. *Final Field Investigation Report, Site 7 and AOC 2, Naval Weapons Station Yorktown Cheatham Annex, Williamsburg, Virginia.* March.

Baker. 2002. *Final Trenching Letter Report, Site 1, Site 4, and AOC 2, Naval Weapons Station Yorktown, Cheatham Annex Site, Williamsburg, Virginia.* June.

CH2M HILL. 2011. *Final Background Study Report, Naval Weapons Station Yorktown, Yorktown, Virginia and Cheatham Annex, Williamsburg, Virginia*. May.

CH2M HILL. 2012. *Final Site Inspection Report, Areas of Concern 1, 2, 6, 7, and 8, Naval Weapons Station Yorktown Cheatham Annex, Williamsburg, Virginia*. May.

CH2M HILL. 2013. *Final No Action Consensus Letter for Groundwater at AOC 2, Naval Weapons Station Yorktown Cheatham Annex, Williamsburg, Virginia*. August.

Department of the Navy (Navy). 2005. *Federal Facility Agreement, U.S. Department of the Navy, Naval Weapons Station Yorktown, Cheatham Annex, York County, Virginia.* March.

Reactives Management, Inc. (RMI). 1998. *Fleet & Industrial Supply Center Cheatham Annex, IV Bottle and Bag Sites Final Report.* Undated. (Note: the original report is not in the CAX Administrative Record; however, relevant pages from it are located within Administrative Record document #01356)

United States Environmental Protection Agency (USEPA). 1993. *Region 3 Modifications to the Laboratory Data Validation Guidelines for Inorganic Data Review*. April.

USEPA. 1994. *Region 3 Modifications to the National Functional Guidelines for Organic Data Review*. September.

USEPA. 2005. *Uniform Federal Policy for Quality Assurance Project Plans.* March.

This page left intentionally blank

Figures

R:\USNAVFACENGCOM405450\CHEATHAMANNEX\MAPFILES\387443_AOC2_SAP\FIGURE1 - BASE LOCATION MAP.MXD JCROCKETT 2/10/2014 11:06:48 AM

Legend

- CAX Boundary
- Active AOC

N
W E
S

0 1,000 2,000
Feet

Figure 1
Base Location Map
AOC 2 SI Supplemental Soil Sample Collection
Cheatham Annex
Williamsburg, Virginia

CH2MHILL

R:\USNAVFACENGCOM405450\CHEATHAMANNEX\MAPFILES\387443_AOC2_SAP\FIGURE2 - AOC SITE MAP.MXD JCROCKETT 1/28/2014 8:44:07 AM

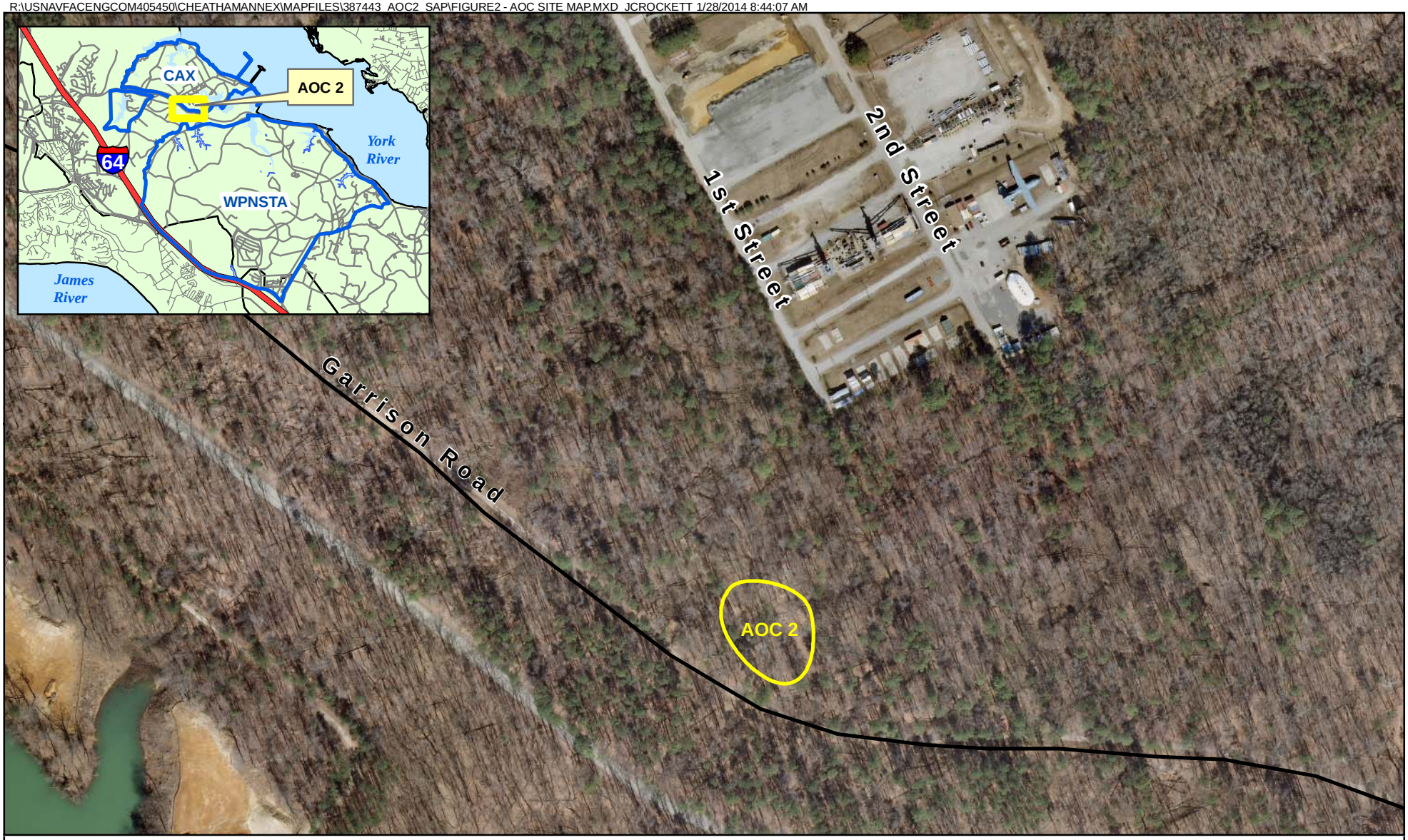

Legend

- CAX Boundary/Fenceline
- Approximate Study Area Boundary

N
W E
S

0 300
Feet

Figure 2
AOC 2 Site Map
AOC 2 SI Supplemental Soil Sample Collection
Cheatham Annex
Williamsburg, Virginia

CH2MHILL

R:\USNAVFACENGCOM405450\CHEATHAMANNEX\MAPFILES\387443_AOC2_SAP\FIGURE 3 - AOC 2 ESTIMATED DEBRIS WASTE VOLUMES.MXD JCROCKETT 3/7/2014 12:08:20 PM

AREA	VOLUME	CONTENT
1a & 1b	670 CY	DEXTROSE BOTTLES
2	445 CY	DRUMS AND RESPIRATOR PROTECTION CARTRIDGES
3	220 CY	MILITARY CLOTHES

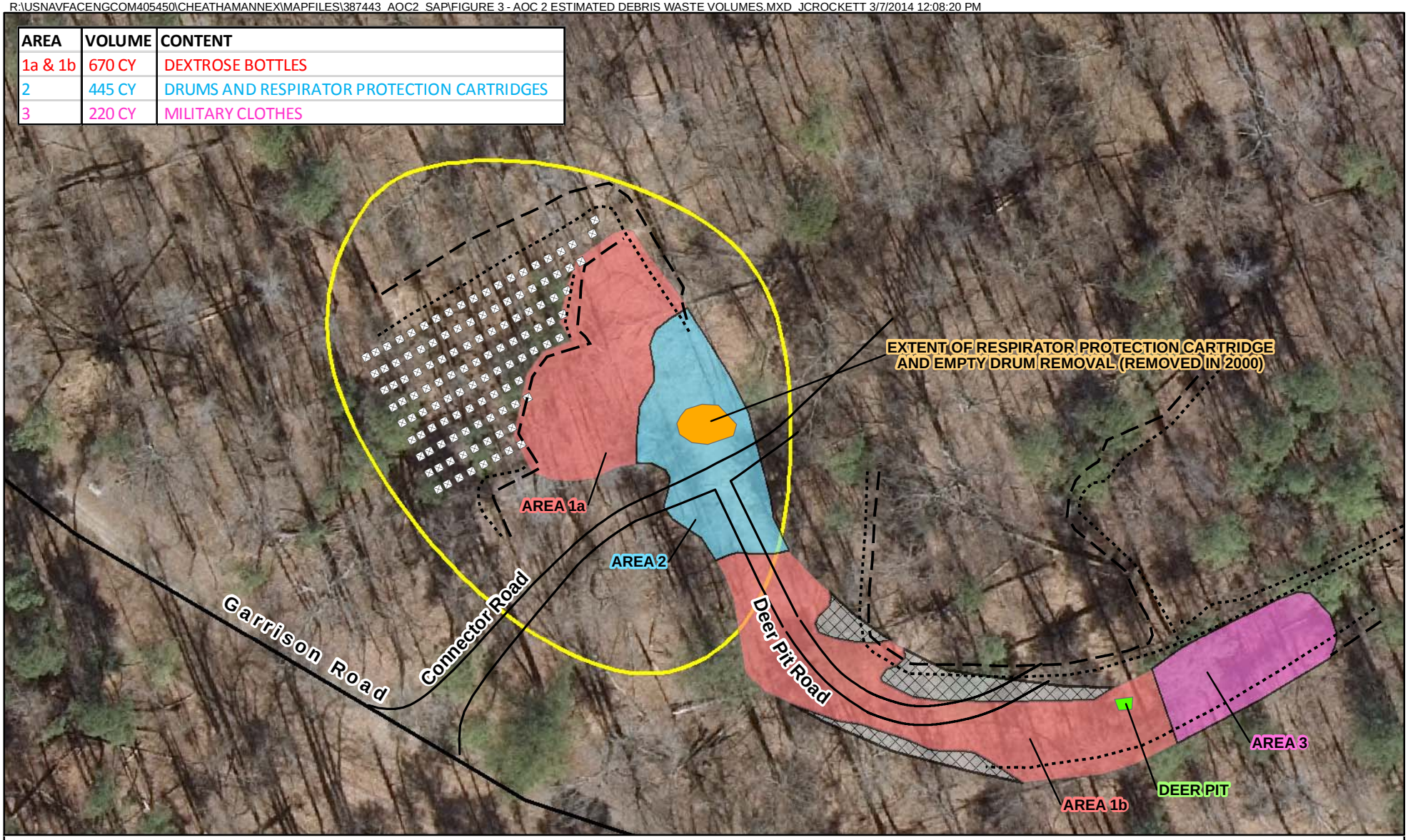

Legend

- Concrete Piers
- Top of Bank
- Toe of Slope
- Area 1a and Area 1b Boundary
- Area 2 Boundary
- Area 3 Bundary
- Deer Pit
- Former Location of Surface Debris (removed in 1998)
- Study Area Boundary
- CAX Boundary / Fenceline

N W E S

0 30 60 Feet

Figure 3
AOC 2 Estimated Debris/Waste Volumes
AOC 2 SI Supplemental Soil Sample Collection
Cheatham Annex
Williamsburg, Virginia

CH2MHILL

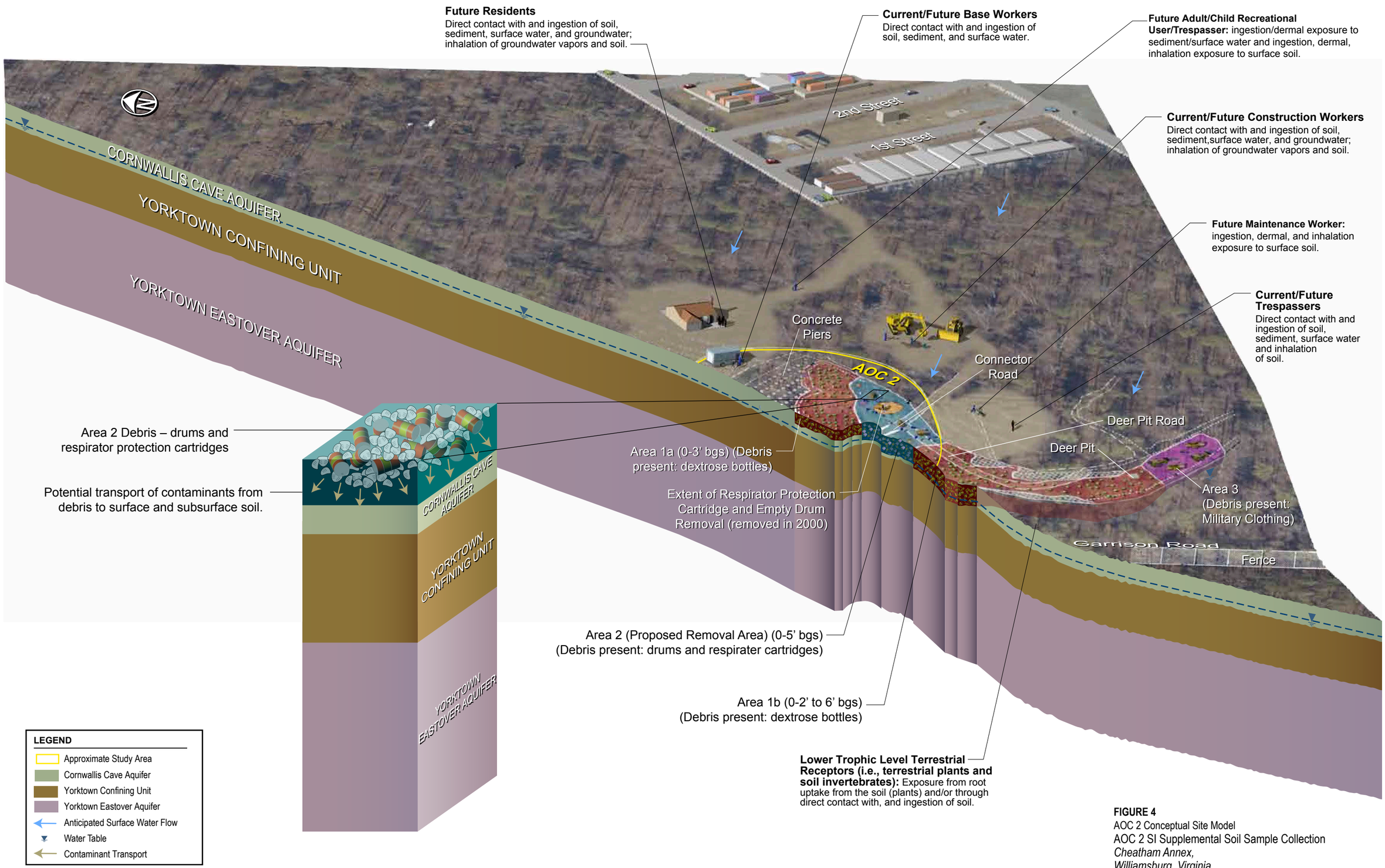

FIGURE 4
AOC 2 Conceptual Site Model
AOC 2 SI Supplemental Soil Sample Collection
Cheatham Annex,
Williamsburg, Virginia

CH2MHILL

ES033011003122VBO CSMCAXAOC_Fig4-1_CMS_Site_AOC2_rev5.ai 3/5/14 LED/dcd

R:\USNAVFACENGCOM405450\CHEATHAMANNEX\MAPFILES\387443_AOC2_SAP\FIGURE5 - PROPOSED HH SS SAMPLE LOCS V2.MXD JCROCKETT 2/26/2014 2:38:42 PM

Contaminant of Potential Concern	CLEAN CAX BKG SS	Eco Surface Soil Screening Value	CLEAN RSLs Industrial Soil Adjusted	CLEAN RSLs Residential Soil Adjusted
Pesticides/PCBs (UG/KG)				
4,4'-DDE	--	114	5,100	1,400
4,4'-DDT	--	100	7,000	1,700
Total Metals (MG/KG)				
Arsenic	6.36	18.0	1.6	0.39
Chromium	18.2	64.0	5.6	0.29
Iron	19,900	pH < 5 or pH > 8	72,000	5,500
Mercury	0.111	0.10	31	2.3
Selenium	0.51	0.52	510	39
Vanadium	27.9	130	520	39

Station ID	CAA002-A2HA01
Sample ID	CAA02-A2-HA01-00-1098*
Sample Date	10/22/98
Depth	0-6"
Organic Compounds (UG/KG)	
No Exceedances	
Total Metals (MG/KG)	
Arsenic	**14**
Chromium	**39**
Iron	**28,600**

Station ID	CAA002-A2DPB02
Sample ID	CAA02-A2-DPB02-00-1098
Sample Date	10/22/98
Depth	0-6"
Organic Compounds (UG/KG)	
No Exceedances	
Total Metals (MG/KG)	
Mercury	**1.4**

Station ID	CAA002-A2HA02
Sample ID	CAA02-A2-HA02-00-1098
Sample Date	10/22/98
Depth	0-6"
Pesticides/PCBs (UG/KG)	
4,4'-DDE	**520 J**
4,4'-DDT	**640 J**
Total Metals (MG/KG)	
Arsenic	**6.6**
Chromium	**15.3**
Mercury	**0.96 J**

Station ID	CAA002-A2DPB03
Sample ID	CAA02-A2-DPB03-00-1098
Sample Date	10/22/98
Depth	0-6"
Organic Compounds (UG/KG)	
No Exceedances	
Total Metals (MG/KG)	
Arsenic	**20**
Chromium	**29.4**
Iron	**44,000**
Mercury	**1.2 J**
Selenium	**0.64 K**
Vanadium	**42.3**

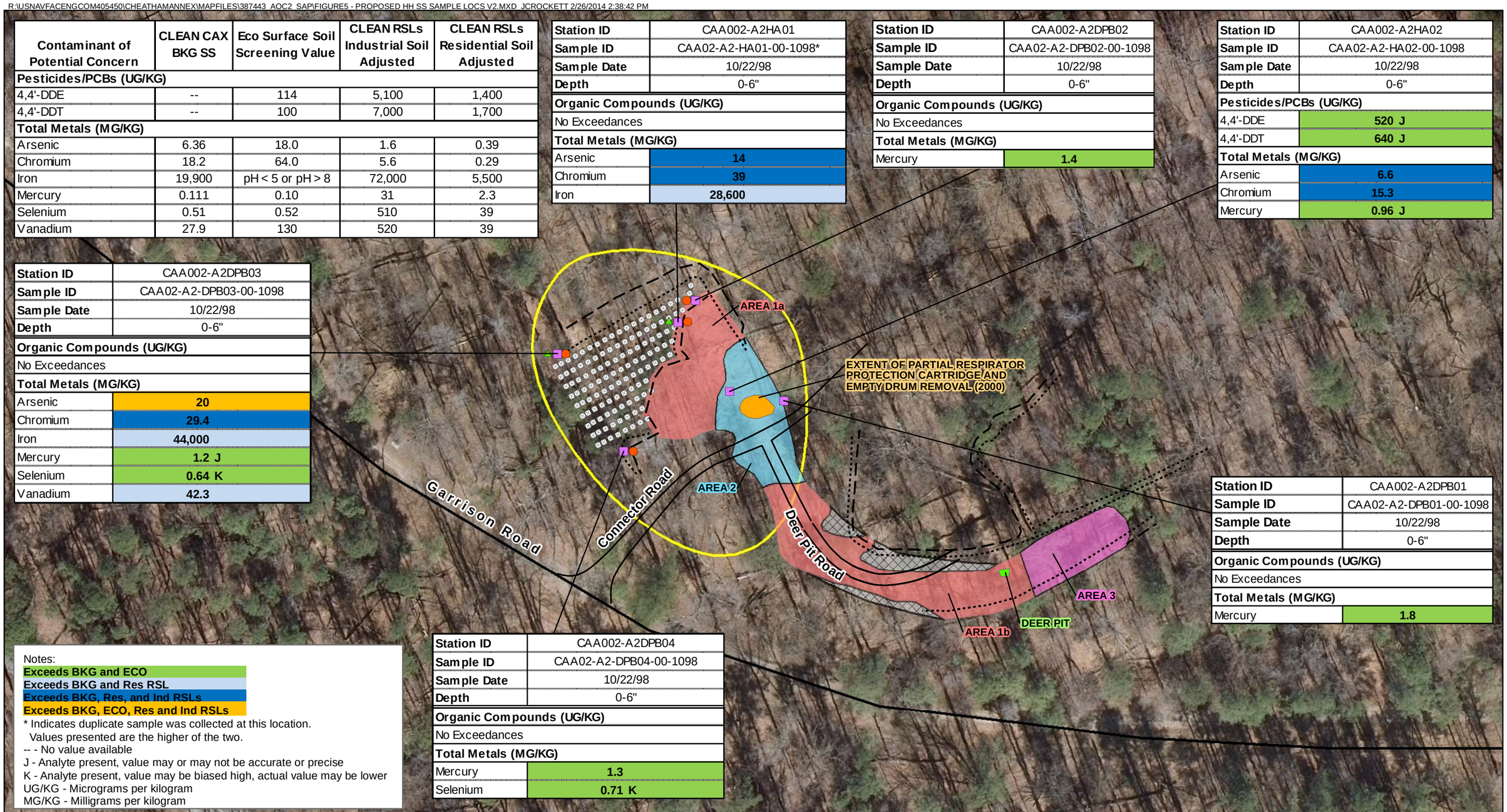

Station ID	CAA002-A2DPB01
Sample ID	CAA02-A2-DPB01-00-1098
Sample Date	10/22/98
Depth	0-6"
Organic Compounds (UG/KG)	
No Exceedances	
Total Metals (MG/KG)	
Mercury	**1.8**

Station ID	CAA002-A2DPB04
Sample ID	CAA02-A2-DPB04-00-1098
Sample Date	10/22/98
Depth	0-6"
Organic Compounds (UG/KG)	
No Exceedances	
Total Metals (MG/KG)	
Mercury	**1.3**
Selenium	**0.71 K**

Notes:
Exceeds BKG and ECO
Exceeds BKG and Res RSL
Exceeds BKG, Res, and Ind RSLs
Exceeds BKG, ECO, Res and Ind RSLs
* Indicates duplicate sample was collected at this location.
Values presented are the higher of the two.
-- - No value available
J - Analyte present, value may or may not be accurate or precise
K - Analyte present, value may be biased high, actual value may be lower
UG/KG - Micrograms per kilogram
MG/KG - Milligrams per kilogram

Legend
- Soil Sample Location
- Proposed Surface Soil Sample Location Mercury, Iron, and pH
- Proposed Surface Soil Sample Location Hex and Total Chromium
- Concrete Piers
- Top of Bank
- Toe of Slope
- Deer Pit
- Extent of Partial Respirator Protection Cartridge and Empty Drum Removal (2000)
- Area 1a and Area 1b Boundary - Dextrose Bottles
- Area 2 Boundary - Drums and Respirator Cartridges
- Area 3 Bundary - Military Clothing
- Former Location of Surface Debris (removed in 1998)
- CAX Boundary / Fenceline
- Study Area Boundary

N W E S

0 70 Feet

Figure 5
AOC 2 SI Surface Soil Exceedance Results and
Proposed Surface Soil Sample Locations
AOC 2 SI Supplemental Soil Sample Collection
Cheatham Annex
Williamsburg, Virginia

CH2MHILL

R:\USNAVFACENGCOM405450\CHEATHAMANNEX\MAPFILES\387443_AOC2_SAP\FIGURE6 - PROPOSED ECO SS SAMPLE LOCS V2.MXD JCROCKETT 2/26/2014 2:42:06 PM

Station ID	CAA02-A2TP05F	CAA02-A2TP05N
Sample ID	CAA02-A2-TP05-F-1199	CAA02-A2-TP05-N-1199*
Sample Date	11/12/99	11/12/99
Depth	1.5-2'	3.75-4'
Organic Compounds (UG/KG)	No Exceedances	No Exceedances
Total Metals (MG/KG)		
Arsenic	1.9 J	16
Chromium	9.2	38.8
Cobalt	2.7 J	6.3 J
Iron	10,800 L	36,700

Station ID	CAA02-A2HA01
Sample ID	CAA02-A2-HA01-02-1098*
Sample Date	10/22/98
Depth	1-2'
Organic Compounds (UG/KG)	No Exceedances
Total Metals (MG/KG)	
Arsenic	31.1
Chromium	43.2
Cobalt	7 J
Iron	42,000
Mercury	0.89 J
Selenium	0.68 K

Station ID	CAA02-A2TP06F	CAA02-A2TP06N
Sample ID	CAA02-A2-TP06-F-1199	CAA02-A2-TP06-N-1199
Sample Date	11/12/99	11/12/99
Depth	2-2.5'	3.5-4'
Organic Compounds (UG/KG)	No Exceedances	No Exceedances
Total Metals (MG/KG)		
Arsenic	4.3	21.2
Cobalt	3.8 J	9.2 J
Iron	25,800 L	34,300

Contaminant of Potential Concern	CLEAN CAX BKG SB	Eco Surface Soil Screening Value	CLEAN RSLs Industrial Soil Adjusted	CLEAN RSLs Residential Soil Adjusted
Pesticide/PCBs (UG/KG)				
4,4'-DDE	--	114	5,100	1,400
Aroclor-1260	--	--	740	220
Total Metals (MG/KG)				
Aluminum	13,000	pH < 5.5	99,000	7,700
Arsenic	5.54	18.0	1.6	0.39
Cadmium	--	32.0	80	7
Chromium	33.7	64.0	5.6	0.29
Cobalt	5.18	13.0	30	2.3
Copper	3.17	70.0	4,100	310
Iron	32,000	pH < 5 or pH > 8	72,000	5,500
Lead	8.79	120	800	400
Mercury	0.14	0.10	31	2.3
Selenium	0.64	0.52	510	39
Thallium	--	--	1[1]	0.078[1]
Vanadium	48.3	130	520	39

Station ID	CAA02-A2TP03F	CAA02-A2TP03N
Sample ID	CAA02-A2-TP03-F-1199	CAA02-A2-TP03-N-1199
Sample Date	11/12/99	11/12/99
Depth	2-3'	3.5-4'
Organic Compounds (UG/KG)	No Exceedances	No Exceedances
Total Metals (MG/KG)		
Aluminum	9,960 L	16,100 L
Arsenic	7.9	36.5
Chromium	24.5	44
Cobalt	5.5 J	10.2 J
Iron	24,300 L	38,800 L
Vanadium	31.4	69.2 J

Station ID	CAA02-A2DPB02	
Sample ID	CAA02-A2-DPB02-03-1098	CAA02-A2-DPB02-10-1098
Sample Date	10/22/98	10/22/98
Depth	6-8'	20-22'
Organic Compounds (UG/KG)	No Exceedances	No Exceedances
Total Metals (MG/KG)		
Arsenic	24.7	10.6
Cobalt	10.1 J	2.3 J

Station ID	CAA02-A2TP04F	CAA02-A2TP04N
Sample ID	CAA02-A2-TP04-F-1199	CAA02-A2-TP04-N-1199
Sample Date	11/12/99	11/12/99
Depth	2.5-3'	3.5-4'
Organic Compounds (UG/KG)	No Exceedances	No Exceedances
Total Metals (MG/KG)		
Arsenic	9.2	36.1
Chromium	15.1	43.3

Station ID	CAA02-A2DPB03	
Sample ID	CAA02-A2-DPB03-03-1098	CAA02-A2-DPB03-09-1098
Sample Date	10/22/98	10/22/98
Depth	6-8'	18-20'
Organic Compounds (UG/KG)	No Exceedances	No Exceedances
Total Metals (MG/KG)		
Arsenic	17.4	9.3
Cobalt	5.3 J	2.5 J

Station ID	CAA02-A2HA02
Sample ID	CAA02-A2-HA02-01-1098
Sample Date	10/22/98
Depth	0.5-1'
Pesticide/PCBs (UG/KG)	
4,4'-DDE	120 J
Total Metals (MG/KG)	
Mercury	1

Station ID	CAA02-A2TP02F	CAA02-A2TP02N
Sample ID	CAA02-A2-TP02-F-1199	CAA02-A2-TP02-N-1199
Sample Date	11/12/99	11/12/99
Depth	3.5-4'	6-7'
Organic Compounds (UK/KG)	No Exceedances	No Exceedances
Total Metals (MG/KG)		
Aluminum	6,160 L	13,700 L
Cadmium	12.3	0.16 U
Chromium	94.5	60.3
Cobalt	3.4 J	6.6 J
Copper	318	137 J
Iron	21,100 L	38,400 L
Thallium	0.64 B	0.84 L

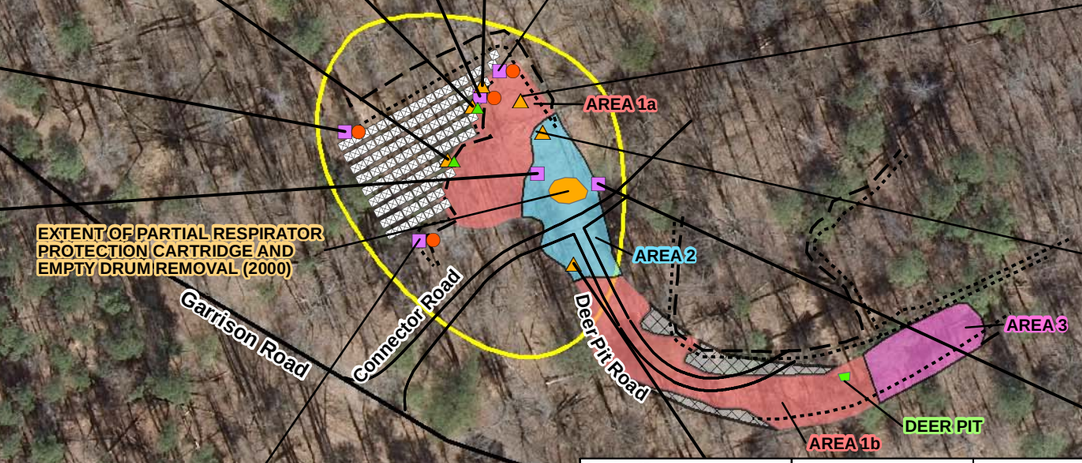

Station ID	CAA02-A2TP01F	CAA02-A2TP01N
Sample ID	CAA02-A2-TP01-F-1199*	CAA02-A2-TP01-N-1199
Sample Date	11/12/99	11/12/99
Depth	3.5-4'	4.8-5.4'
Pesticide/PCBs (UG/KG)		
Aroclor-1260	310	No Detections
Total Metals (MG/KG)		
Arsenic	5	9.4
Chromium	37.5	23.3
Iron	37,500 L	20,700 L

Station ID	CAA02-A2DPB04	
Sample ID	CAA02-A2-DPB04-03-1098	CAA02-A2-DPB04-09-1098
Sample Date	10/23/98	10/23/98
Depth	6-8'	18-20'
Organic Compounds (UG/KG)	No Exceedances	No Exceedances
Total Metals (MG/KG)		
Arsenic	2.7	7.2
Iron	11,000	45,300

Station ID	CAA02-A2DPB01	
Sample ID	CAA02-A2-DPB01-03-1098	CAA02-A2-DPB01-15-1098
Sample Date	10/22/98	10/22/98
Depth	6-8'	30-32'
Organic Compounds (UG/KG)	No Exceedances	No Exceedances
Total Metals (MG/KG)		
Arsenic	7.6	9.2
Cobalt	1.7 U	5.5 J
Vanadium	54.4	14.6

Notes:
Exceeds BKG and ECO
Exceeds BKG and Res RSL
Exceeds BKG, Res and Ind RSLs
Exceeds BKG, ECO, Res and Ind RSLs
Samples collected at a depth greater than 2 feet below ground surface were not included in the ecological risk screening.
[1]Adjusted June 2011 RSL
* Indicates duplicate sample was collected at this location. Values presented are the higher of the two.
-- - No value available
B - Analyte not detected above the level reported in blanks
J - Analyte present, value may or may not be accurate or precise
K - Analyte present, value may be biased high, actual value may be lower
L - Analyte present, value may be biased low, actual value may be higher
U - Analyte not detected
UG/KG - Micrograms per kilogram
MG/KG - Milligrams per kilogram

Legend
- Soil Sample Location
- Proposed Subsurface Soil Sample Location Hex and Total Chromium
- Test Pit Locations
- Proposed Subsurface Soil Sample Location Mercury, Iron, and pH
- Concrete Piers
- Top of Bank
- Toe of Slope
- Deer Pit
- Extent of Partial Respirator Protection Cartridge and Empty Drum Removal (2000)
- Area 1a and Area 1b Boundary - Dextrose Bottles
- Area 2 Boundary - Drums and Respirator Cartridges
- Area 3 Bundary - Military Clothing
- Former Location of Surface Debris (removed in 1998)
- CAX Boundary / Fenceline
- Study Area Boundary

N W E S

0 100 Feet

Figure 6
AOC 2 SI Subsurface Soil Exceedance Results and Proposed Subsurface Soil Sample Locations
AOC 2 SI Supplemental Soil Sample Collection
Cheatham Annex
Williamsburg, Virginia

CH2MHILL

Appendix A
Field Standard Operating Procedures

STANDARD OPERATING PROCEDURE

Equipment Blank and Field Blank Preparation

I. Purpose

To prepare blanks to determine whether decontamination procedures are adequate and whether any cross-contamination is occurring during sampling due to contaminated air and dust.

II. Scope

The general protocols for preparing the blanks are outlined. The actual equipment to be rinsed will depend on the requirements of the specific sampling procedure.

III. Equipment and Materials

- Blank liquid (use ASTM Type II or lab grade water)
- Millipore™ deionized water
- Sample bottles as appropriate
- Gloves
- Preservatives as appropriate

IV. Procedures and Guidelines

A. Decontaminate all sampling equipment that has come in contact with sample according to SOP *Decontamination of Personnel and Equipment.*

B. To collect an equipment blank for volatile analysis from the surfaces of sampling equipment other than pumps, pour blank water over one piece of equipment and into two 40-ml vials until there is a positive meniscus, then seal the vials. Note the sample number and associated piece of equipment in the field notebook as well as the type and lot number of the water used.

For non-volatiles analyses, one aliquot is to be used for equipment. For example, if a pan and trowel are used, place trowel in pan and pour blank fluid in pan such that pan and trowel surfaces which contacted the sample are contacted by the blank fluid. Pour blank fluid from pan into appropriate sample bottles.

Do not let the blank fluid come in contact with any equipment that has not been decontaminated.

C. When collecting an equipment blank from a pump, run an extra gallon of deionized water through the pump while collecting the pump outflow into appropriate containers. Make sure the flow rate is low when sampling VOCs. If a Grundfos Redi-Flo2 pump with disposable tubing is used, remove the disposable tubing after sampling but before decon. When decon is complete, put a 3- to 5-foot segment of new tubing onto the pump to collect the equipment blank.

D. To collect a field blank, slowly pour ASTM Type II or lab grade water directly into sample containers.

E. Document and ship samples in accordance with the procedures for other samples.

F. Collect next field sample.

V. Attachments

None.

VI. Key Checks and Items

- Wear gloves.
- Do not use any non-decontaminated equipment to prepare blank.
- Use ASTM-Type II or lab grade water.

STANDARD OPERATING PROCEDURE

Chain-of-Custody

I Purpose

The purpose of this SOP is to provide information on chain-of-custody procedures to be used under the CLEAN Program.

II Scope

This procedure describes the steps necessary for transferring samples through the use of Chain-of-Custody Records. A Chain-of-Custody Record is required, without exception, for the tracking and recording of samples collected for on-site or off-site analysis (chemical or geotechnical) during program activities (except wellhead samples taken for measurement of field parameters). Use of the Chain-of-Custody Record Form creates an accurate written record that can be used to trace the possession and handling of the sample from the moment of its collection through analysis. This procedure identifies the necessary custody records and describes their completion. This procedure does not take precedence over region specific or site-specific requirements for chain-of-custody.

III Definitions

Chain-of-Custody Record Form - A Chain-of-Custody Record Form is a printed two-part form that accompanies a sample or group of samples as custody of the sample(s) is transferred from one custodian to another custodian. One copy of the form must be retained in the project file.

Custodian - The person responsible for the custody of samples at a particular time, until custody is transferred to another person (and so documented), who then becomes custodian. A sample is under one's custody if:

- It is in one's actual possession.
- It is in one's view, after being in one's physical possession.
- It was in one's physical possession and then he/she locked it up to prevent tampering.
- It is in a designated and identified secure area.

Sample - A sample is physical evidence collected from a facility or the environment, which is representative of conditions at the point and time that it was collected.

IV. Procedures

The term "chain-of-custody" refers to procedures which ensure that evidence presented in a court of law is valid. The chain-of-custody procedures track the evidence from the time and place it is first obtained to the courtroom, as well as providing security for the evidence as it is moved and/or passed from the custody of one individual to another.

Chain-of-custody procedures, recordkeeping, and documentation are an important part of the management control of samples. Regulatory agencies must be able to provide the chain-of-possession and custody of any samples that are offered for evidence, or that form the basis of analytical test results introduced as evidence. Written procedures must be available and followed whenever evidence samples are collected, transferred, stored, analyzed, or destroyed.

Sample Identification

The method of identification of a sample depends on the type of measurement or analysis performed. When *in situ* measurements are made, the data are recorded directly in bound logbooks or other field data records with identifying information.

Information which shall be recorded in the field logbook, when in-situ measurements or samples for laboratory analysis are collected, includes:

- Field Sampler(s),
- Contract Task Order (CTO) Number,
- Project Sample Number,
- Sample location or sampling station number,
- Date and time of sample collection and/or measurement,
- Field observations,
- Equipment used to collect samples and measurements, and
- Calibration data for equipment used

Measurements and observations shall be recorded using waterproof ink.

Sample Label

Samples, other than for *in situ* measurements, are removed and transported from the sample location to a laboratory or other location for analysis. Before removal, however, a sample is often divided into portions, depending upon the analyses to be performed. Each portion is preserved in accordance with the Sampling and Analysis Plan. Each sample container is identified by a sample label (see Attachment A). Sample labels are provided, along with sample containers, by the analytical laboratory. The information recorded on the sample label includes:

- Project - CTO Number.
- Station Location - The unique sample number identifying this sample.
- Date - A six-digit number indicating the day, month, and year of sample collection (e.g., 08/21/12).

- Time - A four-digit number indicating the 24-hour time of collection (for example: 0954 is 9:54 a.m., and 1629 is 4:29 p.m.).
- Medium - Water, soil, sediment, sludge, waste, etc.
- Sample Type - Grab or composite.
- Preservation - Type and quantity of preservation added.
- Analysis - VOA, BNAs, PCBs, pesticides, metals, cyanide, other.
- Sampled By - Printed name of the sampler.
- Remarks - Any pertinent additional information.

Using only the work assignment number of the sample label maintains the anonymity of sites. This may be necessary, even to the extent of preventing the laboratory performing the analysis from knowing the identity of the site (e.g., if the laboratory is part of an organization that has performed previous work on the site). The field team should always follow the sample ID system prepared by the project EIS and reviewed by the Project Manager.

Chain-of-Custody Procedures

After collection, separation, identification, and preservation, the sample is maintained under chain-of-custody procedures until it is in the custody of the analytical laboratory and has been stored or disposed.

Field Custody Procedures

- Samples are collected as described in the site Sampling and Analysis Plan. Care must be taken to record precisely the sample location and to ensure that the sample number on the label matches the Chain-of-Custody Record exactly.

- A Chain-of-Custody Record will be prepared for each individual cooler shipped and will include ***only*** the samples contained within that particular cooler. The Chain-of-Custody Record for that cooler will then be sealed in a zip-log bag and placed in the cooler prior to sealing. This ensures that the laboratory properly attributes trip blanks with the correct cooler and allows for easier tracking should a cooler become lost during transit.

- The person undertaking the actual sampling in the field is responsible for the care and custody of the samples collected until they are properly transferred or dispatched.

- When photographs are taken of the sampling as part of the documentation procedure, the name of the photographer, date, time, site location, and site description are entered sequentially in the site logbook as photos are taken. Once downloaded to the server or developed, the electronic files or photographic prints shall be serially numbered, corresponding to the logbook descriptions; photographic prints will be stored in the project files. To identify sample

locations in photographs, an easily read sign with the appropriate sample location number should be included.

- Sample labels shall be completed for each sample, using waterproof ink unless prohibited by weather conditions (e.g., a logbook notation would explain that a pencil was used to fill out the sample label if the pen would not function in freezing weather.)

Transfer of Custody and Shipment

Samples are accompanied by a Chain-of-Custody Record Form. **A Chain-of-Custody Record Form must be completed for each cooler and should include only the samples contained within that cooler**. A Chain-of-Custody Record Form example is shown in Attachment B. When transferring the possession of samples, the individuals relinquishing and receiving will sign, date, and note the time on the Record. This Record documents sample custody transfer from the sampler, often through another person, to the analyst in the laboratory. The Chain-of-Custody Record is filled out as given below:

- Enter header information (CTO number, samplers, and project name).

- Enter sample specific information (sample number, media, sample analysis required and analytical method grab or composite, number and type of sample containers, and date/time sample was collected).

- Sign, date, and enter the time under "Relinquished by" entry.

- Have the person receiving the sample sign the "Received by" entry. If shipping samples by a common carrier, print the carrier to be used in this space (i.e., Federal Express).

- If a carrier is used, enter the airbill number under "Remarks," in the bottom right corner;

- Place the original (top, signed copy) of the Chain-of-Custody Record Form in a plastic zipper-type bag or other appropriate sample-shipping package. Retain the copy with field records.

- Sign and date the custody seal, a 1-inch by 3-inch white paper label with black lettering and an adhesive backing. Attachment C is an example of a custody seal. The custody seal is part of the chain-of-custody process and is used to prevent tampering with samples after they have been collected in the field. Custody seals shall be provided by the analytical laboratory.

- Place the seal across the shipping container opening (front and back) so that it would be broken if the container were to be opened.

- Complete other carrier-required shipping papers.

The custody record is completed using waterproof ink. Any corrections are made by drawing a line through and initialing and dating the change, then entering the correct information. Erasures are not permitted.

Common carriers will usually not accept responsibility for handling Chain-of-Custody Record Forms; this necessitates packing the record in the shipping container (enclosed with other documentation in a plastic zipper-type bag). As long as custody forms are sealed inside the shipping container and the custody seals are intact, commercial carriers are not required to sign the custody form.

The laboratory representative who accepts the incoming sample shipment signs and dates the Chain-of-Custody Record, completing the sample transfer process. It is then the laboratory's responsibility to maintain internal logbooks and custody records throughout sample preparation and analysis.

V Quality Assurance Records

Once samples have been packaged and shipped, the Chain-of-Custody copy and airbill receipt become part of the quality assurance record.

VI Attachments

A. Sample Label
B. Chain of Custody Form
C. Custody Seal

VII References

USEPA. *User's Guide to the Contract Laboratory Program*. Office of Emergency and Remedial Response, Washington, D.C. (EPA/540/P-91/002), January 1991.

Attachment A

Example Sample Label

Quality Analytical Laboratories, Inc.
2567 Fairlane Drive
Montgomery, Alabama 36116
PH. (334)271-2440

Client _____
Sample No. _____
Location _____
_____
Analysis _____
_____
Preservative HCL
Date _____ By _____

CEIMIC
CORPORATION
10 Dean Knauss Drive, Narragansett, R.I. 02882 • (401) 782-8900

SITE NAME	DATE
ANALYSIS	TIME
	PRESERVATIVE

SAMPLE TYPE

☐ Grab ☐ Composite ☐ Other _____

COLLECTED BY:

Attachment B

Example Chain-of-Custody Record

CH2M HILL
APPLIED SCIENCES LABORATORY

CHAIN OF CUSTODY RECORD AND AGREEMENT TO PERFORM SERVICES

CH2M Hill Project #

Purchase Order #

Project Name

Company Name CH2M HILL Office

Project Manager & Phone #
Mr. [ ]
Ms. [ ]
Dr. [ ]

Report Copy to:

Requested Completion Date:

Sampling Requirements: SDWA [ ] NPDES [ ] RCRA [ ] OTHER ____

Sample Disposal: Dispose [ ] Return [ ]

Sampling Date	Sampling Time	Type COMP	Type GRAB	Matrix WATER	Matrix SOIL	Matrix AIR	CLIENT SAMPLE ID (9 CHARACTERS)	# OF CONTAINERS	ANALYSES REQUESTED	REMARKS	LAB 1 ID	LAB 2 ID

LAB TEST CODES

SHADED AREA– FOR LAB USE ONLY

Lab 1 #

Lab 2 #

Quote #

Kit Request #

Project #

No. of Samples

Page of

Login

LIMS Ver

Sampled By & Title (Please sign and print name)	Date/Time	Relinquished By (Please sign and print name)	Date/Time
Received By (Please sign and print name)	Date/Time	Relinquished By (Please sign and print name)	Date/Time
Received By (Please sign and print name)	Date/Time	Relinquished By (Please sign and print name)	Date/Time
Received By (Please sign and print name)	Date/Time	Shipped Via UPS BUS Fed-Ex Hand Other ____	Shipping #
Work Authorized By (Please sign and print name)	Remarks		

QC Level: 1 2 3 Other: ____

COC Rec	ICE
Ana Req	TEMP
Cust Seal	Ph

Instructions and Agreement Provisions on Reverse Side

DISTRIBUTION: Original - LAB, Yellow - LAB, Pink - Client

REV 3/94 FORM 340

Attachment C

Example Custody Seal

CRM HILL

CUSTODY SEAL

Date

Signature

STANDARD OPERATING PROCEDURE

Decontamination of Personnel and Equipment

I. Purpose

To provide general guidelines for the decontamination of personnel, sampling equipment, and monitoring equipment used in potentially contaminated environments.

II. Scope

This is a general description of decontamination procedures.

III. Equipment and Materials

- Demonstrated analyte-free, deionized ("DI") water (specifically, ASTM Type II water or lab-grade DI water)
- Potable water; must be from a municipal water supplier, otherwise an analysis must be run for appropriate volatile and semivolatile organic compounds and inorganic chemicals (e.g., Target Compound List and Target Analyte List chemicals)
- 2.5% (W/W) Liquinox® (or Alconox®) and water solution
- Concentrated (V/V) pesticide grade isopropanol (DO NOT USE ACETONE)
- Large plastic pails or tubs for Liquinox® and water, scrub brushes, squirt bottles for Liquinox® solution, methanol and water, plastic bags and sheets
- DOT approved 55-gallon drum for disposal of waste
- Personal Protective Equipment as specified by the Health and Safety Plan
- Decontamination pad and steam cleaner/high pressure cleaner for large equipment

IV. Procedures and Guidelines

A. PERSONNEL DECONTAMINATION

To be performed after completion of tasks whenever potential for contamination exists, and upon leaving the exclusion zone.

1. Wash boots in Liquinox® solution, then rinse with water. If disposable latex booties are worn over boots in the work area, rinse with Liquinox® solution, remove, and discard into DOT-approved 55-gallon drum.

2. Wash outer gloves in Liquinox® solution, rinse, remove, and discard into DOT-approved 55-gallon drum.

3. Remove disposable coveralls ("Tyveks") and discard into DOT-approved 55-gallon drum.

4. Remove respirator (if worn).

5. Remove inner gloves and discard.

6. At the end of the work day, shower entire body, including hair, either at the work site or at home.

7. Sanitize respirator if worn.

B. SAMPLING EQUIPMENT DECONTAMINATION—GROUNDWATER SAMPLING PUMPS

Sampling pumps are decontaminated after each use as follows.

1. Don phthalate-free gloves.

2. Spread plastic on the ground to keep equipment from touching the ground

3. Turn off pump after sampling. Remove pump from well and remove and dispose of tubing. Place pump in decontamination tube.

4. Turn pump back on and pump 1 gallon of Liquinox® solution through the sampling pump.

5. Rinse with 1 gallon of 10% isopropanol solution pumped through the pump. (DO NOT USE ACETONE). (Optional)

6. Rinse with 1 gallon of tap water.

7. Rinse with 1 gallon of deionized water.

8. Keep decontaminated pump in decontamination tube or remove and wrap in aluminum foil or clean plastic sheeting.

9. Collect all rinsate and dispose of in a DOT-approved 55-gallon drum.

10. Decontamination materials (e.g., plastic sheeting, tubing, etc.) that have come in contact with used decontamination fluids or sampling equipment will be disposed of in either DOT-approved 55-gallon drums or with solid waste in garbage bags, dependent on Facility/project requirements.

C. SAMPLING EQUIPMENT DECONTAMINATION—OTHER EQUIPMENT

Reusable sampling equipment is decontaminated after each use as follows.

1. Don phthalate-free gloves.
2. Before entering the potentially contaminated zone, wrap soil contact points in aluminum foil (shiny side out).
3. Rinse and scrub with potable water.
4. Wash all equipment surfaces that contacted the potentially contaminated soil/water with Liquinox® solution.
5. Rinse with potable water.
6. Rinse with distilled or potable water and isopropanol solution (DO NOT USE ACETONE). (Optional)
7. Air dry.
8. Rinse with deionized water.
9. Completely air dry and wrap exposed areas with aluminum foil (shiny side out) for transport and handling if equipment will not be used immediately.
10. Collect all rinsate and dispose of in a DOT-approved 55-gallon drum.
11. Decontamination materials (e.g., plastic sheeting, tubing, etc.) that have come in contact with used decontamination fluids or sampling equipment will be disposed of in DOT-approved 55-gallon drums or with solid waste in garbage bags, dependent on Facility/project requirements.

D. HEALTH AND SAFETY MONITORING EQUIPMENT DECONTAMINATION

1. Before use, wrap soil contact points in plastic to reduce need for subsequent cleaning.
2. Wipe all surfaces that had possible contact with contaminated materials with a paper towel wet with Liquinox® solution, then a towel wet with methanol solution, and finally three times with a towel wet with distilled water. Dispose of all used paper towels in a DOT-approved 55-gallon drum or with solid waste in garbage bags, dependent on Facility/project requirements.

E. SAMPLE CONTAINER DECONTAMINATION

The outsides of sample bottles or containers filled in the field may need to be decontaminated before being packed for shipment or handled by personnel without hand protection. The procedure is:

1. Wipe container with a paper towel dampened with Liquinox® solution or immerse in the solution AFTER THE CONTAINERS HAVE BEEN SEALED. Repeat the above steps using potable water.

2. Dispose of all used paper towels in a DOT-approved 55-gallon drum or with solid waste in garbage bags, dependent on Facility/project requirements.

F. HEAVY EQUIPMENT AND TOOLS

Heavy equipment such as drilling rigs, drilling rods/tools, and the backhoe will be decontaminated upon arrival at the site and between locations as follows:

1. Set up a decontamination pad in area designated by the Facility

2. Steam clean heavy equipment until no visible signs of dirt are observed. This may require wire or stiff brushes to dislodge dirt from some areas.

V. Attachments

None.

VI. Key Checks and Items

- Clean with solutions of Liquinox®, methanol (optional), and distilled water.
- Do not use acetone for decontamination.
- Drum all contaminated rinsate and materials.
- Decontaminate filled sample bottles before relinquishing them to anyone.

STANDARD OPERATING PROCEDURE

Sampling Contents of Tanks and Drums

I. Scope and Application

This procedure provides an overview approach and guidelines for the routine sampling of drums and tanks. Its purpose is to describe standard procedures and precautions which are applied in sampling drums and tanks. Procedures for opening drums with the individual instruments are included in Attachment D.

The samples obtained may be used to obtain physical chemical or radiological data. The resulting data may be qualitative or quantitative in nature, and are appropriate for use in preliminary surveys as well as confirmatory sampling.

II. Summary of Methods

Drums are generally sampled by means of sampling tubes such as glass sample tubes or COLIWASA samplers. In either case, the sampling tube is manually inserted into the waste material. A sample of the drum contents is withdrawn by the sampling device. Should a drum contain bottom sludge, a glass tube will be used to retrieve a sample of this as well.

Storage tank and tank trailers, because of their greater depths, require sampling devices that can be lowered from the top, filled at a particular depth, then withdrawn. Such devices are a COLIWASA, a Kemmerer depth sampler, or a Bacon Bomb. Where samples of bottom sludge are desired, a gravity corer can be utilized. This heavy tube with a tapered nose piece will penetrate the sludge as it free falls through the tank.

III. Comments

The sampling of tanks, containers, and drums present unique problems not associated with environmental samples. Containers of this sort are generally closed except for small access ports, manways, or hatches on the larger vessels, or taps and bungs on smaller drums. The physical size, shape, construction material, and location of access limit the types of equipment and methods of collection that can be used.

When liquids are contained in sealed vessels, gas vapor pressure can build up, sludges can settle out, and density layerings (stratification) can develop. Bulging drums may be under pressure and extreme caution should be exercised. The potential exists for explosive reactions or the release of noxious gases when containers are opened. All vessels should be opened with extreme caution. Check the HSP for the level of personnel protection to be worn. A preliminary sampling of

any headspace gases is warranted. As a minimum, a preliminary check with a Multi RAE or equivalent may be of aid in selecting a sampling method.

In most cases it is impossible to observe the contents of these sealed or partially sealed vessels. Since some layering or stratification is likely in any solution left undisturbed over time, a sample must be taken that represents the entire depth of the vessel.

IV. Required Equipment and Apparatus

A. **Health and safety equipment/materials**: As listed in the site safety plan.

B. **Sampling equipment**: COLIWASA, glass sample tubes, Kemmerer depth sampler, Bacon Bomb, gravity corer.

C. **Tools**: Rubber mallet, bung wrench, speed wrench with socket, etc., (all non-sparking), paint marker.

D. **Heavy equipment**: Backhoe equipped with explosion shield, drum grappler, and 3-foot copper-beryllium (non-sparking) spike with 6-inch collar (to puncture top of drums for sampling, if necessary).

E. **Sample Containers**: As specified in the field sampling plan.

V. Procedures

A. Drums

NOTE: DO NOT open more than one drum at a time. Each drum must be handled and sampled as a separate entity to reduce vapors in the sampling area.

1. Drums will be sampled on an area-by-area basis. Drums will be sampled after they have been placed in overpack drums but before they are transferred from the excavation to the onsite storage area.

2. Record, in logbook, all pertinent information from visual inspection of drum (e.g., physical condition, leaks, bulges, and labels). Label each drum with a unique identifying number.

3. If possible, stage drums for easy access.

4. If necessary, attach ground strap to drums and grounding point.

5. Remove any standing material (water, etc.) from container top.

6. Using non-sparking tools, carefully remove the bung or lid while monitoring air quality with appropriate instruments. If necessary (and as a last resort), the non-sparking spike affixed to the backhoe can also be used to puncture the drum for sampling. See Attachment D for method of drum opening. Record air-quality monitoring results.

7. When sampling a previously sealed vessel, a check should be made for the presence of bottom sludge. This is accomplished by measuring the depth to apparent bottom, then comparing it to the known interior depth.

8. Agitation to disrupt the layers and rehomogenize the sample is physically difficult and almost always undesirable. If the vessel is greater than 3 feet in depth (say, a 55-gallon drum), the appropriate sampling method is to slowly lower the sampling device (i.e., suction line of peristaltic pump, glass tube) in known increments of length. Discrete samples can be collected from various depths, then combined or analyzed separately. If the depth of the vessel is greater than the lift capacity of the pump, an at-depth water sampler, such as the Kemmerer or Bacon Bomb type, may be required.

9. Extract a representative sample from the drum using a glass rod, COLIWASA, Bacon Bomb, Kemmerer bottle, or gravity corer (See Attachments). Ensure that the entire depth of material is penetrated. Depending on the size of the opening of the drum, three to four takes should be collected from random locations across the drum surface, to ensure a representative sample. Any observed stratification must be recorded in logbook, including number and thickness of the layers and a conceptualized sketch.

10. Record a visual description of the sample (e.g., liquid, solid, color, viscosity, and percent layers).

11. When possible, sampling equipment (like glass tubes) should be expendable and be left inside the drum for disposal with drum contents, once sampling is completed.

12. Place lid, bung, cap, etc., back in place on drum. Tighten hand tight. If necessary, the sampling port can be sealed using a cork.

13. Wipe up spilled material with lab wipes. Wipe off sample containers.

14. Mark the drum with a unique sample identification number and date using a paint marker.

15. Samples will be handled as high hazard samples. Samples will be placed in containers defined according to the analytical needs, wiped clean, and then packed in paint cans for shipping. Packaging, labeling, and preparation for shipment procedures will follow procedures as specified in the field sampling plan.

B. Underground Storage Tanks

1. A sampling team of at least two people is required for sampling—one will collect samples, the other will relay required equipment and implements.

2. Sampling team will locate a sampling port on the tank. Personnel should be wearing appropriate protective clothing at this time and carrying sampling gear.

3. Do not attempt to climb down into tank. Sampling MUST BE accomplished from the top.

4. Collect a sample from the upper, middle, and lower section of the tank contents with one of the recommended sampling devices.

5. If compositing is necessary, ship samples to laboratory in separate containers for laboratory compositing.

6. Samples will be handled as hazardous. Samples will be placed in appropriate containers and packed with ice in a cooler. Packaging, labeling, and preparation for shipment will follow procedures specified in the field sampling plan.

C. Tank Trailers or Above-Ground Storage Tanks

1. A sampling team of two is required. One will collect samples, the other will relay required equipment and implements.

2. Samples will be collected through the manhole (hatch) on top of the tanker or the fill port. Do not open valves at the bottom. Before opening the hatch, check for a pressure gauge or release valve. Open the release valve slowly to bring the tank to atmospheric pressure.

3. If tank pressure is too great, or venting releases large amounts of toxic gas, discontinue venting and sampling immediately. Measure vented gas with organic vapor analyzer and explosimeter.

4. If no release valve exists, slowly loosen hatch cover bolts to relieve pressure in the tank. (Again, stop if pressure is too great.)

5. Once pressure in tank has been relieved, open the hatch and withdraw sample using one of the recommended sampling devices.

6. Sample each trailer compartment.

7. If compositing is necessary, ship samples to laboratory in separate containers for laboratory compositing.

8. Samples will be handled as hazardous. Samples will be placed in appropriate containers and packed with ice in a cooler. Packaging, labeling, and preparation for shipment will follow procedures specified in the field sampling plan.

D. Refer to Attachment B for procedures for sampling with appropriate devices as follows:

<u>Drum</u>

Glass tube — Procedure 1

COLIWASA	–	Procedure 2

Storage Tank and Tank Trailer

COLIWASA	–	Procedure 2
Bacon Bomb	–	Procedure 3
Gravity Corer (for bottom sludge)	–	Procedure 4

VI. Contamination Control

Sampling tools, instruments, and equipment will be protected from sources of contamination prior to use and decontaminated after use as specified in SOP *Decontamination of Personnel and Equipment*. Liquids and materials from decontamination operations will be handled in accordance with the waste management plan. Sample containers will be protected from sources of contamination. Sampling personnel shall wear chemical resistant gloves when handling any samples. Gloves will be decontaminated or disposed of between samples.

VIII. Attachments

A. Collection of Liquid-Containerized Wastes Using Glass Tubes

B. Sampling Containerized Wastes Using the Composite Liquid Waste Sample (COLIWASA)

C. Sampling Containerized Wastes Using the Bacon Bomb Sampler

D. Gravity Corer for sampling Sludges in Large Containers

E. Construction of a Typical COLIWASA

F. Drum Opening Techniques and Equipment

IX. References

A Compendium of Superfund Field Operations Methods, EPA/540/P-87/001, U.S. Environmental Protection Agency, Washington, D.C., 1987.

Data Quality Objectives for Remedial Activities - Development Process, EPA/540/G-87/003, U.S. Environmental Protection Agency, Washington, D.C., 1987.

Annual Book of ASTM Standards, *Standard Recommended Practices for Sampling Industrial Chemicals*, ASTM-E-300, 1986.

Test Method for Evaluating Solid Waste, SW-846, Volume II, Field Methods, Second Edition, U.S. Environmental Protection Agency, Washington, D.C., 1982.

U.S. Environmental Protection Agency, *Characterization of Hazardous Waste Sites — A Method Manual: Volume II, Available Sampling Methods*, USEPA Environmental Monitoring Systems Laboratory, Las Vegas, EPA-600/4-84-076, December, 1984.

Environmental Surveillance Procedures, Quality Control Program, Martin Marietta Energy Systems, ESH/Sub/87-21706/1, Oak Ridge, TN, September 1988.

X. Field Checklist

_____ Sampling Instruments

_____ Tools

_____ Rubber Mallet

_____ Logbook

_____ Safety Glasses or Monogoggles

_____ Safety Shoes

_____ Ice/Cooler, as required

_____ Custody Seals, as required

_____ Chain-of-Custody Forms

_____ Drum Labels, as required

_____ Paint Marker, if drum sampling

_____ Black Indelible Pen

_____ Monitoring Instruments

_____ Labels

_____ Sampling and Analysis Plan

_____ Health and Safety Plan

_____ Decontamination Equipment

_____ Lab Wipes

_____ Lab Spatulas or Stainless Steel Spoons

_____ Chemical Preservatives, as required

_____ Appropriate Containers for Waste and Equipment

_____ Duct Tape

_____ Plastic Sheeting

Attachment A Collection of Liquid-Containerized Wastes Using Glass Tubes

Discussion

Liquid samples from opened containers (i.e., 55-gallon drums) are collected using lengths of glass tubing. The glass tubes are normally 122 centimeters long and 6 to 16 millimeters inside diameter. Larger diameter tubes may be used for more viscous fluids if sampling with the small diameter tube is not adequate. The tubing is broken and discarded in the container after the sample has been collected, eliminating difficult cleanup and disposal problems. This method should not be attempted with less than a two-person sampling team.

Uses

This method provides for a quick, relatively inexpensive means of collecting concentrated containerized wastes. The major disadvantage is from potential sample loss that is especially prevalent when sampling low-viscosity fluids. Splashing can also be a problem and proper protective clothing should always be worn.

Note: A flexible tube with an aspirator attached is an alternative method to the glass tube, and allows various levels to be sampled discretely.

Procedures for Use

1. Remove cover from sample container.
2. Insert glass tubing almost to the bottom of the container. Tubing should be of sufficient length so that at least 30 centimeters extend above the top of the container.
3. Allow the waste in the drum to reach its natural level in the tube.
4. Cap the top of the tube with a safety-gloved thumb or a stopper.
5. Carefully remove the capped tube from the drum. If the tube has passed through more than one layer, the boundary should be apparent in the glass tube.
6. Insert the bottom, uncapped end into the sample container.
7. Partially release the thumb or stopper on the top of the tube and allow the sample to slowly flow into the sample container. If separation of phases is desired, cap off tube before the bottom phase has completely emptied. It may be advisable to have an extra container for "waste," so that the fluid on either side of the phase boundary can be directed into a separate container, allowing collection of pure phase liquids in the sample containers. The liquid remaining after the boundary fluid is removed is collected in yet a third container. NOTE: It is not necessary to put phases in separate containers if analysis of separate phases is not desired.
8. Repeat steps 2 through 6 if more volume is needed to fill the sample container.
9. Remove the tube from the sample container and replace the tube in the drum, breaking it, if necessary, in order to dispose of it in the drum.

Optional Method (if sample of bottom sludge is desired)

1. Remove the cover from the container opening.
2. Insert glass tubing slowly almost to the bottom of the container. Tubing should be of sufficient length so that at least 30 cm extends above the top of the container.
3. Allow the waste in the drum to reach its natural level in the tube.
4. Gently push the tube towards the bottom of the drum into the sludge layer. Do not force it.
5. Cap the top of the tube with a safety-gloved thumb or stopper.
6. Carefully remove the capped tube from the drum and insert the uncapped end into the sample container.
7. Release the thumb or stopper on the top of the tube and allow the sample container to fill to approximately 90 percent of its capacity. If necessary, the sludge plug in the bottom of the tube can be dislodged with the aid of the stainless steel laboratory spatula.
8. Repeat if more volume is needed to fill sample container and recap the tube.

Note:

1. If a reaction is observed when the glass tube is inserted (violent agitation, smoke, light, etc.), the investigators should leave the area immediately.
2. If the glass tube becomes cloudy or smoky after insertion into the drum, the presence of hydrofluoric acid maybe indicated, and a comparable length of rigid plastic tubing should be used to collect the sample.
3. When a solid is encountered in a drum (either layer or bottom sludge) the optional method described above may be used to collect a core of the material, or the material may be collected with a disposable scoop attached to a length of wooden or plastic rod.

Attachment B: Sampling Containerized Wastes using the Composite Liquid Waste Sampler (COLIWASA)

Discussion

The COLIWASA is a much-cited sampler designed to permit representative sampling of multiphase wastes from drums and other containerized wastes. The sampler is commercially available or can be easily fabricated from a variety of materials, including PVC, glass, or Teflon. In its usual configuration it consists of a 152 cm by 4 cm (inside diameter) section of tubing with a neoprene stopper at one end attached by a rod running the length of the tube to a locking mechanism at the other end. Manipulation of the locking mechanism opens and closes the sampler by raising and lowering the neoprene stopper. See Attachment E: Construction of a COLIWASA.

Uses

The COLIWASA is primarily used to sample containerized liquids. The PVC COLIWASA is reported to be able to sample most containerized liquid wastes except for those containing ketones, nitrobenzene, dimethylforamide, mesityloxide, and tetrahydrofuran. A glass COLIWASA is able to handle all wastes unable to be sampled with the plastic unit except strong alkali and hydrofluoric acid solutions. Due to the unknown nature of many containerized wastes, it would therefore be advisable to eliminate the use of PVC materials and use samplers composed of glass or Teflon.

The major drawback associated with using a COLIWASA is concern for decontamination and costs. The sampler is difficult, if not impossible, to decontaminate in the field, and its high cost in relation to alternative procedures (glass tubes) makes it an impractical throwaway item. It still has applications, however, especially in instances where a true representation of a multiphase waste is absolutely necessary.

Procedures for Use

1. Check to make sure the sampler is functioning properly. Adjust the locking mechanism, if present, to make sure the neoprene rubber stopper provides a tight closure.

2. Put the sampler in the open position by placing the stopper rod handle in the T-position and pushing the rod down until the handle sits against the sampler's locking block.

3. Slowly lower the sampler into the liquid waste. Lower the sampler at a rate that permits the levels of the liquid inside and outside the sampler tube to be about the same. If the level of the liquid in the sample tube is lower than that outside the sampler, the sampling rate is too fast and will result in a non-representative sample.

4. When the sampler stopper hits the bottom of the waste container, push the sampler tube downward against the stopper to close the sampler. Lock the sampler in the closed position by turning the T-handle until it is upright and one end rests tightly on the locking block.

5. Slowly withdraw the sampler from the waste container with one hand while wiping the sampler tube with a laboratory wipe with the other hand. A phase boundary, if present, can be observed through the tube.

6. Carefully discharge the sample into a suitable sample container by slowly pulling the lower end of the T-handle away from the locking block while the lower end of the sampler is positioned in a sample container.

7. Unscrew the T-handle of the sampler and disengage the locking block.

Attachment C: Sampling Containerized Wastes using the Bacon Bomb Sampler

Discussion

The Bacon Bomb is designed for the withdrawal of samples from various levels within a storage tank. It consists of a cylindrical body with an internal tapered plunger that acts as a valve to admit the sample. A line attached to the top of the plunger is used to open and close the valve. A removable cover provides a point of attachment for the sample line and has a locking mechanism to keep the plunger closed after sampling. The Bacon Bomb is usually constructed of chrome-plated brass and bronze with a rubber O-ring acting as the plunger-sealing surface. Stainless steel versions are also available. The volumemetric capacity is 8, 16, or 32 oz (237, 473, or 946 ml).

Uses

The Bacon Bomb is a heavy sampler suited best for viscous materials held in large storage tanks or in lagoons. If a more non-reactive sampler is needed, the stainless steel version would be used, or any of the samplers could be coated with Teflon.

Procedures for Use

1. Attach the sample line and the plunger line to the sampler.
2. Measure and then mark the sampling line at the desired depth.
3. Gradually lower the sampler by the sample line until the desired level is reached.
4. When the desired level is reached, pull up on the plunger line and allow the sampler to fill for a sufficient length of time before releasing the plunger line to seal off the sampler.
5. Retrieve the sampler by the sample line, being careful not to pull up on the plunger line, thereby accidentally opening the bottom valve.
6. Wipe off the exterior of the sampler body.
7. Position the sampler over the sample container and release its contents by pulling up on the plunger line.

Attachment D: Gravity Corer for Sampling Sludges in Large Containers

Discussion

A gravity corer is a metal tube with a replaceable tapered nosepiece on the bottom and a ball or other type of check valve on the top. The check valve allows water to pass through the corer on descent but prevents a washout during recovery. The tapered nosepiece facilitates cutting and reduces core disturbance during penetration. Most corers are constructed of brass or steel and many can accept plastic liners and additional weights.

Uses

Corers are capable of collecting samples of most sludges and sediments. They collect essentially undisturbed samples that represent the strata profile that may develop in sediments and sludges during variations in the deposition process. Depending on the density of the substrate and the weight of the corer, penetration to depths of 75 cm (30 in.) can be attained. Exercise care when using gravity corers in vessels or lagoons that have liners because penetration depths could exceed those of the substrate; this could result in damage to the liner material.

Procedures for Use

1. Attach a precleaned corer to the required length of sample line. Solid braided 5-mm (3/16-in.) nylon line is sufficient; however, 20-mm (3/4-in.) nylon is easier to grasp during hand hoisting. An additional weight can be attached to the outside of the corer if necessary.
2. Secure the free end of the line to a fixed support to prevent accidental loss of the corer.
3. Allow corer to free fall through the liquid to the bottom.
4. Retrieve corer with a smooth, continuous, up-lifting motion. Do not bump corer because this may result in some sample loss.
5. Remove nosepiece from corer and slide sample out of corer into stainless steel or Teflon pan (preferred).
6. Transfer sample into appropriate sample bottle with a stainless steel lab spoon or laboratory spatula.

Attachment E: Construction of a Typical COLIWASA

The sampling tube consists of a 1.52-m (5-ft) by 4.13-cm (1-5/8 in) I.D. translucent plastic pipe, usually polyvinyl chloride (PVC) or borosilicate glass plumbing tube. The closure-locking mechanism consists of a short-length, channeled aluminum bar attached to the sampler's stopper rod by an adjustable swivel. The aluminum bar serves both as a T-handle and lock for the samplers' closure system. When the sampler is in the open position, the handle is placed in the T-position and pushed down against the locking block. This manipulation pushes out the neoprene stopper and opens at the sampling tube. In the closed position, the handle is rotated until one leg of the T is squarely perpendicular against the locking block. This tightly seats the neoprene stopper against the bottom opening of he sampling tube and positively locks the sampler in the closed position. The closure tension can be adjusted by shortening or lengthening the stopper rod by screwing it in or out of the T-handle swivel. The closure system of the sampler consists of a sharply tapered neoprene stopper attached to a 0.95-cm (3/8-in) O.D. rod, usually PVC. The upper end of the stopper rod is connected to the swivel of the aluminum T-handle. The sharply tapered neoprene stopper can be fabricated according to specifications by plastic-products manufacturers at an extremely high price, or it can be made in-house by grinding down the inexpensive stopper with a shop grinder.

COLIWASA samplers are typically made out of plastic or glass. The plastic type consists of translucent plastic (usually PVC) sampling tube. The glass COLIWASA uses borosilicate glass plumbing pipe as the sampling tube and a Teflon plastic stopper rod. For purpose of multiphase sampling, clear plastic or glass is desirable in order to observe the profile of the multiphase liquid.

The sampler is assembled as follows:

a. Attach the swivel to the T-handle with the 3.18-cm (1-1/4 in) long bolt and secure with the 0.48-cm (3/16-in) National Coarse (NC) washer and lock nut.

b. Attach the PFTE stopper to one end of the stopper rod and secure with the 0.95-cm (3/8-in) washer and lock nut.

c. Install the stopper and stopper rod assembly in the sampling tube.

d. Secure the locking block sleeve on the block with glue or screw. This block can also be fashioned by shaping a solid plastic rod on a lathe to the required dimension.

e. Position the locking block on top of the sampling tube such that the sleeveless portion of the block fits inside the tube, the sleeve sits against the top end of the tube, and the upper end of the stopper rod slips though the center hole of the block.

f. Attach the upper end of the stopper rod to the swivel of the T-handle.

g. Place the sampler in the close position and adjust the tension on the stopper by screwing the T-handle in or out.

Attachment F: Drum Opening Techniques and Equipment [1]

I. Introduction

The opening of closed drums prior to sampling entails considerable risk if not done with the proper techniques, tools, and safety equipment. The potential for vapor exposure, skin exposure due to splash or spraying, or even explosion resulting from sparks produced by friction of the tools against the drum, necessitate caution when opening any closed container. Both manual drum opening and remote drum opening will be discussed in the following paragraphs. When drums are opened manually risks are greater than when opened remotely; for this reason, the remote opening of drums is advised whenever possible.

Prior to sampling, the drums should be staged to allow easy access. Also, any standing water or other material should be removed from the container top so that the representative nature of the sample is not compromised when the container is opened. There is also the possibility of encountering a water-reactive substance.

II. Manual Drum Opening

A. Bung Wrench

A common method for opening drums manually is using a universal bung wrench. These wrenches have fittings made to remove nearly all commonly encountered bungs. They are usually constructed of cast iron, brass, or a bronze-beryllium (a non-sparking alloy formulated to reduce the likelihood of sparks). The use of bung wrenches marked "NON SPARKING" is encouraged. However, the use of a "NON SPARKING" wrench does not completely eliminate the possibility of spark being produced. Such a wrench only prevents a spark caused by wrench-to-bung friction, but it cannot prevent sparking between the threads on the drum and the bung.

A simple tool to use, the fitting on the bung wrench matching the bung to be removed is inserted into the bung and the tool is turned counterclockwise to remove the bung. Since the contents of some drums may be under pressure (especially, when the ambient temperature is high), the bung should be turned very slowly. If any hissing is heard, the person opening the drum should back off and wait for the hissing to stop. Since drums under pressure can spray out liquids when opened, the wearing of appropriate eye and skin protection in addition to respiratory protection is critical.

B. Drum Deheader

One means by which a drum can be opened manually when a bung is not removable with a bung wrench is by using a drum deheader. This tool is constructed of forged steel with an alloy steel blade and is designed to cut the lid of a drum off or part way

[1] Taken from EPA Training Course: "Sampling for Hazardous Materials," U.S. Environmental Protection Agency, Office of Emergency and Remedial Response Support Division, March 24, 1987.

off by means of a scissors-like cutting action. A limitation of this device is that it can be attached only to closed head drums (i.e., DOT Specification 17E and 17F drums); drums with removable heads must be opened by other means.

Drums are opened with a drum deheader by first positioning the cutting edge just inside the top chime and then tightening the adjustment screw so that the deheader is held against the side of the drum. Moving the handle of the deheader up and down while sliding the deheader along the chime will enable the entire top to be rapidly cut off if so desired. If the top chime of a drum has been damaged or badly dented it may not be possible to cut the entire top off. Since there is always the possibility that a drum may be under pressure, the initial cut should be made very slowly to allow for the gradual release of any built-up pressure. A safer technique would be to employ a remote pressure release method prior to using the deheader.

C. Hand Pick or Spike

When a drum must be opened and neither a bung wrench nor a drum deheader is suitable, then it can be opened for sampling by using a hand pick, pickaxe, or spike. These tools are usually constructed of brass or a non-sparking alloy with a sharpened point that can penetrate the drum lid or head when the tool is swung. The hand picks or pickaxes that are most commonly used are commercially available, whereas the spikes are generally uniquely fabricated 4- foot long poles with a pointed end. Often the drum lid or head must be hit with a great deal of force in order to penetrate it. Because of this, the potential for splash or spraying is greater than with other opening methods and therefore this method of drum opening is not recommended, particularly when opening drums containing liquids. Some spikes used for drum opening have been modified by the addition of a circular splash plate near the penetrating end. This plate acts as a shield and reduces the amount of splash in the direction of the person using the spike. Even with this shield, good splash gear is essential.

Since drums, some of which may be under pressure, cannot be opened slowly with these tools, “sprayers” may result and appropriate safety measures must be taken. The pick or spike should be decontaminated after each drum is opened to avoid cross contamination and/or adverse chemical reaction from incompatible materials.

III. Remote Opening

A. Backhoe Spike

The most common means used to open drums remotely for sampling is the use of a metal spike attached or welded to a backhoe bucket. In addition to being very efficient, this method can greatly reduce the likelihood of personnel exposure.

Drums should be “staged,” or placed in rows with adequate aisle space to allow ease in backhoe maneuvering. Once staged, the drums can be quickly opened by punching a hole in the drum head or lid with the spike.

The spike should be decontaminated after each drum is opened to prevent cross contamination. Even though some splash or spray may occur when this method is

used, the operator of the backhoe can be protected by mounting a large shatter-resistant shield in front of the operator's cage. This, combined with the normal sampling safety gear, should be sufficient to protect the operator. Additional respiratory protection can be afforded by providing the operator with an on-board airline system. The hole in the drum can be sealed with a cork.

B. Hydraulic Devices

Recently, remotely operated hydraulic devices have been fabricated to open drums remotely. One such device is discussed here. This device uses hydraulic pressure to pierce through the wall of a drum. It consists of a manually operated pump that pressurizes oil through a length of hydraulic line. A piercing device with a metal point is attached to the end of this line and is pushed into the drum by the hydraulic pressure. The piercing device can be attached so that a hole for sampling can be made in either the side or the head/lid of the drum. Some of the metal piercers are hollow or tube-like so that they can be left in place, if desired, and serve as a permanent tap or sampling port. The piercer is designed to establish a tight seal after penetrating the container.

C. Pneumatic Devices

Pneumatically-operated devices utilizing compressed air have been designed to remove drum bungs remotely. A pneumatic bung remover consists of a compressed air supply (usually SCBA cylinders) that is controlled by a heavy-duty, 2-stage regulator. A high pressure air line of desired length delivers compressed air to a pneumatic drill that is adapted to turn a bung fitting (preferably, a bronze-beryllium alloy) selected to fit the bung to be removed. An adjustable bracketing system has been designed to position and align the pneumatic drill over the bung. This bracketing system must be attached to the drum before the drill can be operated. Once the bung has been loosened, the bracketing system must be removed before the drum can be sampled. This attachment and removal procedure is time- consuming and is the major drawback of this device. This remote bung opener does not permit the slow venting of the container, and therefore appropriate precautions must be taken. It also requires the container to be upright and relatively level. Bungs that are rusted shut cannot be removed with this device.

IV. Summary

The opening of closed containers is one of the most hazardous site activities. Maximum efforts would be made to ensure the safety of the sampling team. Proper protective equipment and a general wariness of the possible dangers will minimize the risk inherent to sampling operations. Employing proper drum opening techniques and equipment will also safeguard personnel. The use of remote sampling equipment whenever feasible is highly recommended.

STANDARD OPERATING PROCEDURE

Disposal of Waste Fluids and Solids

I. Purpose and Scope

This SOP describes the procedures used to dispose of hazardous fluid and solid materials generated as a result of the site operations. This SOP does not provide guidance on the details of Department of Transportation regulations pertaining to the transport of hazardous wastes; the appropriate Code of Federal Regulations (49 CFR 171 through 177) should be referenced. Also, the site investigation-derived waste management plan should be consulted for additional information and should take precedence over this SOP.

II. Equipment and Materials

A. Fluids

- DOT-approved 55-gallon steel drums or Baker® Tanks
- Tools for securing drum lids
- Funnel for transferring liquid into drum
- Labels
- Paint Pens
- Marking pen for appropriate labels
- Seals for 55-gallon steel drums

B. Solids

- DOT-approved 55-gallon steel drums or rolloffs
- Tools for securing drum lids
- Paint Pens
- Plastic sheets
- Labels
- Marking pen for appropriate labels

III. Procedures and Guidelines

A. Methodology

Clean, empty drums or rolloffs or Baker® Tanks will be brought to the site by the drilling subcontractor for soil and groundwater collection and storage. The empty drums will be located at the field staging area and moved to drilling locations as required. The drums will be filled with the drilling and well installation wastes, capped, sealed, and moved to the onsite drum storage area by the drilling subcontractor. The full drums will separate types of wastes by media. The drums will

be labeled as they are filled in the field and labels indicating that the contents are pending analysis affixed.

The drum contents will be sampled to determine the disposal requirements of the drilling wastes. The drum sampling will be accomplished through the collection and submittal of composite samples, one sample per 10 drums (check with disposal facility to determine sample frequency) containing the same media. Similar compositing will be performed in each rolloff to obtain a representative sample. The compositing of the sample will be accomplished by collecting a specific volume of the material in each drum into a large sample container. When samples from each of the drums being sampled in a single compositing are collected, the sample will be submitted for TCLP, ignitability, corrosivity, and reactivity analysis. The analysis will be used to determine if drilling wastes are covered by land disposal restrictions.

If rolloffs are used, compositing and sampling of soil will comply with applicable state and federal regulations.

B. Labels

Drums and other containers used for storing wastes from drilling operations will be labeled when accumulation in the container begins. Labels will include the following minimum information:

- Container number
- Container contents
- Origin (source area including individuals wells, piezometers, and soil borings)
- Date that accumulation began
- Date that accumulation ended
- Generator Contact Information
- When laboratory results are received, drum labels will be completed or revised to indicate the hazardous waste constituents in compliance with Title 40 of the Code of Federal Regulations, Part 262, Subpart C if the results indicate hazardous waste or labeled as non-hazardous if applicable.

C. Fluids

Drilling fluids generated during soil boring and groundwater discharged during development and purging of the monitoring wells will be collected in 55-gallon, closed-top drums. When a drum is filled, the bung will be secured tightly. Fluids may also be transferred to Baker® Tanks after being temporarily contained in drums to minimize the amount of drums used.

When development and purging is completed, the water will be tested for appropriate hazardous waste constituents. Compositing and sampling of fluids will comply with applicable state and federal regulations.

D. Solids

The soil cuttings from well and boring drilling will constitute a large portion of the solids to be disposed of.

The solid waste stream also will include plastic sheeting used for decontamination pads, Tyveks, disposable sampling materials, and any other disposable material used during the field operations that appears to be contaminated. These materials will be placed in designated drums.

E. Storage and Disposal

The wastes generated at the site at individual locations will be transported to the drum storage area by the drilling services subcontractor. Drums should be stored on pallets on plastic sheeting with a short berm wall (hay bales or 2 x 4 planks or equivalent) to capture small spills.

Waste solid materials that contain hazardous constituents will be disposed of at an offsite location in a manner consistent with applicable solid waste, hazardous waste, and water quality regulations. Transport and disposal will be performed by a commercial firm under subcontract.

The liquid wastes meeting acceptable levels of discharge contamination may be disposed of through the sanitary sewer system at the site. However, prior to disposal to the sanitary sewer system, approval and contract arrangements will be made with the appropriate authorities. Wastes exceeding acceptable levels for disposal through the sanitary sewer system will be disposed of through contract with a commercial transport and disposal firm.

IV. Attachments

None.

V. Key Checks and Preventative Maintenance

- Check that representative samples of the containerized materials are obtained.
- Be sure that all state and federal regulations are considered when classifying waste for disposal.

STANDARD OPERATING PROCEDURE

Global Positioning System

I. Purpose

The procedure describes the calibration, operation, and functions associated with a Trimble® Pro XRS GPS Unit with a TSC-1 Asset Surveyor for datalogging. GPS signal information is differentially corrected to sub-meter accuracy on a continual basis using a second satellite signal broadcast from OmniSTAR satellite subscription service. The procedure applies to all field data collection activities.

II. Scope

This procedure provides information regarding the field operation and general maintenance of a Trimble® Pro XRS GPS Unit with a TSC-1 Asset Surveyor for datalogging. The information contained herein presents the operation procedures for this equipment. Review of the equipment's instruction manual is a necessity for more detailed descriptions pertaining to the operation and maintenance of the equipment.

III. Definitions

GPS: Global Positioning System - A system of 24 satellites developed and operated by the US DOD. Continuous 3D coordinate information is broadcast free of charge on a worldwide basis enabling precise positional location. Three standard categories of positional accuracy are generally used:

1. Uncorrected Signal - accuracy +/-10 meters - a single satellite transmission is used
2. Differentially Corrected Signal - accuracy +/- <1 meter - additional positional transmissions are recorded simultaneously and used to triangulate coordinate position.
3. Carrier Phase Signal- accuracy +/- <1 centimeter - requires a second receiver and additional software. Both receivers need to be equipped to receive Carrier Phase signals.

IV. Procedures and Guidelines

The procedure for calibration, operation, and maintenance of the GPS unit is outlined below. Daily calibration and battery recharging is typical operating procedure; frequencies other than daily shall be noted in the logbook and reason for increased frequency recorded. If using a different instrument, the operation manual supplied by the manufacturer should be consulted for instructions.

The procedures described below include additional features pre-programmed into the GPS datalogger to aid the data collection process.

A. Calibration

1. Check to ensure that the datalogger and antenna cables are properly connected to the receiver and that the batteries are securely connected.
2. Turn the datalogger unit on by pressing the green **On** key in the bottom left corner. The datalogger will perform a self-calibration. Wait to ensure that the antenna is receiving a sufficient number of satellite signals (usually a minimum of 3).
3. Once the datalogger receives a satellite signal then it is ready for operation.

B. Operations for surveying coordinates of a location

1. The datalogger and GPS receiver are ready for use after the initial self-calibration.
2. Field data may be immediately recorded in the datalogger.
3. The first screen view is the 'Main Menu'. Use the round keypad to select 'Data Collection' and press the **Enter** key.
4. Use the round keypad to select either 'Create new file' or 'Open existing file' and press the **Enter** key. It is not necessary to create a new file at each new location; however, it may be useful to create a new file at the beginning of each day.
5. If a new file is created then the GPS unit will automatically assign it a file name. The file name may be changed if desired. Press the enter key after the file name is assigned. If opening an existing file then use the round keypad to scroll through existing file names.
6. The next screen is 'Antenna options'. Press the **Enter** key to move to the next screen.
7. Select the type of activity to be performed. At the beginning of each day 'Sample Site Detail' should be completed. This allows the operator to enter each field team member, weather, objectives, health and safety meetings, etc. Once the 'Sample Site Detail' is completed then data entry activities may begin including well purging, water level elevations, and sample collection
8. The datalogger prompts the operator when a data field is required and by using the round key pad, numeric, alphanumeric, enter, and escape keys, the operator can perform electronic data capture on the GPS datalogger.
9. Once all information pertaining to an individual site has been recorded, press enter to complete data entry. If GPS signal is obstructed (tree canopy, building height, etc) user may choose to remain in same location until satellite transmission clears the obstruction. This usually takes only a few moments. Data may still be captured and recorded electronically even if GPS signal is insufficient for positioning.
10. To shut down, press the **Escape** key to return to the 'Main Menu'. The unit can be turned off by pressing the green key in the left hand corner. The datalogger should only be turned off when the 'Main Menu' screen is displayed.
11. All data from the datalogger should be downloaded into Trimble Pathfinder Office software on a PC a minimum of once daily. It is recommended that data is downloaded twice daily. Data may be viewed and mapped using Pathfinder Office or exported to

other software. Export file formats support standard ASCII text, generic database .dbf and most GIS and CAD software.

C. Operations for locating a point using coordinates/reacquiring a previously surveyed location

1. The datalogger and GPS receiver are ready for use after the initial self-calibration.
2. Use the Trimble Pathfinder software to load the data file containing the coordinates for each desired location ("programmed location").
3. The first screen view is the 'Main Menu'. Use the keypad to select 'Navigation' and press the **Enter** key.
4. Use the round keypad to select 'Open existing file' to open the file loaded in Step 2 above.
5. Select the location to be reacquired from the screen and press the enter key.
6. A circle with an arrow will appear. As you begin walking, the arrow will point in the direction of the programmed location. Walk in the direction indicated by the arrow.
7. Once you are within 10-feet of the location being reacquired, the GPS unit will display a circle (representing the programmed location) and an "X" (representing the GPS unit). Continue to walk in the direction of the circle until the "X" is centered in the circle. Once the "X" is centered, you are standing at the programmed location.
8. To shut down, press the **Escape** key to return to the 'Main Menu'. The unit can be turned off by pressing the green key in the left hand corner. The datalogger should only be turned off when the 'Main Menu' screen is displayed.

D. Preventive Maintenance

The antenna and datalogger are weatherproof. It is recommended that the receiver remain in the provided backpack carrier. Care should be taken not to crease, pinch or bend the antenna cable. Data should be downloaded from the datalogger a minimum of once daily, twice daily is preferred. At the end of each day the receiver batteries should be recharged. For technical assistance call the rental company through which you acquired the Trimble® unit. Guidance is also provided in the manual and at http://www.trimble.com.

STANDARD OPERATING PROCEDURE

Homogenization of Soil and Sediment Samples

I. Purpose

The homogenization of soil and sediment samples is performed to minimize any bias of sample representativeness introduced by the natural stratification of constituents within the sample.

II. Scope

Standard techniques for soil and sediment homogenization and equipment are provided in this SOP. These procedures do not apply to aliquots collected for VOCs or field GC screening; samples for these analyses should NOT be homogenized.

III. Equipment and Materials

Sample containers, stainless steel spoons or spatulas, and stainless steel pans.

IV. Procedures and Guidelines

Soil and sediment samples to be analyzed for semivolatiles, pesticides, PCBs, metals, cyanide, or field XRF screening should be homogenized in the field. After a sample is taken, a stainless steel spatula should be used to remove the sample from the split spoon or other sampling device. The sampler should not use fingers to do this, as gloves may introduce organic interferences into the sample.

Samples for VOCs should be taken immediately upon collection and should not be homogenized.

Prior to homogenizing the soil or sediment sample, any rocks, twigs, leaves, or other debris should be removed from the sample. The sample should be placed in a decontaminated stainless steel pan and thoroughly mixed using a stainless steel spoon. The soil or sediment material in the pan should be scraped from the sides, corners, and bottom, rolled into the middle of the pan, and initially mixed. The sample should then be quartered and moved to the four corners of the pan. Each quarter of the sample should be mixed individually, and then rolled to the center of the pan and mixed with the entire sample again.

All stainless steel spoons, spatulas, and pans must be decontaminated following procedures specified in SOP *Decontamination of Personnel and Equipment* prior to homogenizing the sample. A composite equipment rinse blank of homogenization equipment should be taken each day it is used.

V. Attachments

None.

VI. Key Checks and Items

- Take VOC samples immediately and do not homogenize the soil.
- Homogenize soil for analyses other than VOCs in a clean, stainless steel bowl.

STANDARD OPERATING PROCEDURE

Preparing Field Log Books

I. Purpose

This SOP provides general guidelines for entering field data into log books during site investigation and remediation activities.

II. Scope

This is a general description of data requirements and format for field log books. Log books are needed to properly document all field activities in support of data evaluation and possible legal activities.

III. Equipment and Materials

- Log book
- Indelible pen

IV. Procedures and Guidelines

Properly completed field log books are a requirement for much of the work we perform under the Navy CLEAN contract. Log books are legal documents and, as such, must be prepared following specific procedures and must contain required information to ensure their integrity and legitimacy. This SOP describes the basic requirements for field log book entries.

A. PROCEDURES FOR COMPLETING FIELD LOG BOOKS

1. Field notes commonly are kept in bound, hard-cover logbooks used by surveyors and produced, for example, by Peninsular Publishing Company and Sesco, Inc. Pages should be water-resistant and notes should be taken only with water-proof, non-erasable permanent ink, such as that provided in Sanford Sharpie® permanent markers.
2. On the inside cover of the log book the following information should be included:
    - Company name and address
    - Log-holders name if log book was assigned specifically to that person
    - Activity or location

- Project name
- Project manager's name
- Phone numbers of the company, supervisors, emergency response, etc.

3. All lines of all pages should be used to prevent later additions of text, which could later be questioned. Any line not used should be marked through with a line and initialed and dated. Any pages not used should be marked through with a line, the author's initials, the date, and the note "Intentionally Left Blank."

4. If errors are made in the log book, cross a single line through the error and enter the correct information. All corrections shall be initialed and dated by the personnel performing the correction. If possible, all corrections should be made by the individual who made the error.

5. Daily entries will be made chronologically.

6. Information will be recorded directly in the field log book during the work activity. Information will not be written on a separate sheet and then later transcribed into the log book.

7. Each page of the log book will have the date of the work and the note takers initials.

8. The final page of each day's notes will include the note-takers signature as well as the date.

9. Only information relevant to the subject project will be added to the log book.

10. The field notes will be copied and the copies sent to the Project Manager or designee in a timely manner (at least by the end of each week of work being performed).

B. INFORMATION TO BE INCLUDED IN FIELD LOG BOOKS

1. Entries into the log book should be as detailed and descriptive as possible so that a particular situation can be recalled without reliance on the collector's memory. Entries must be legible and complete.

2. General project information will be recorded at the beginning of each field project. This will include the project title, the project number, and project staff.

3. Scope: Describe the general scope of work to be performed each day.

4. Weather: Record the weather conditions and any significant changes in the weather during the day.

5. Tail Gate Safety Meetings: Record time and location of meeting, who was present, topics discussed, issues/problems/concerns identified,

and corrective actions or adjustments made to address concerns/ problems, and other pertinent information.

6. Standard Health and Safety Procedures: Record level of personal protection being used (e.g., level D PPE), record air monitoring data on a regular basis and note where data were recording (e.g., reading in borehole, reading in breathing zone, etc). Also record other required health and safety procedures as specified in the project specific health and safety plan.

7. Instrument Calibration; Record calibration information for each piece of health and safety and field equipment.

8. Personnel: Record names of all personnel present during field activities and list their roles and their affiliation. Record when personnel and visitors enter and leave a project site and their level of personal protection.

9. Communications: Record communications with project manager, subcontractors, regulators, facility personnel, and others that impact performance of the project.

10. Time: Keep a running time log explaining field activities as they occur chronologically throughout the day.

11. Deviations from the Work Plan: Record any deviations from the work plan and document why these were required and any communications authorizing these deviations.

12. Heath and Safety Incidents: Record any health and safety incidents and immediately report any incidents to the Project Manager.

13. Subcontractor Information: Record name of company, record names and roles of subcontractor personnel, list type of equipment being used and general scope of work. List times of starting and stopping work and quantities of consumable equipment used if it is to be billed to the project.

14. Problems and Corrective Actions: Clearly describe any problems encountered during the field work and the corrective actions taken to address these problems.

15. Technical and Project Information: Describe the details of the work being performed. The technical information recorded will vary significantly between projects. The project work plan will describe the specific activities to be performed and may also list requirements for note taking. Discuss note-taking expectations with the Project Manager prior to beginning the field work.

16. Any conditions that might adversely affect the work or any data obtained (e.g., nearby construction that might have introduced excessive amounts of dust into the air).

17. Sampling Information; Specific information that will be relevant to most sampling jobs includes the following:

- Description of the general sampling area – site name, buildings and streets in the area, etc.
- Station/Location identifier
- Description of the sample location – estimate location in comparison to two fixed points – draw a diagram in the field log book indicating sample location relative to these fixed points – include distances in feet.
- Sample matrix and type
- Sample date and time
- Sample identifier
- Draw a box around the sample ID so that it stands out in the field notes
- Information on how the sample was collected – distinguish between "grab," "composite," and "discrete" samples
- Number and type of sample containers collected
- Record of any field measurements taken (i.e. pH, turbidity, dissolved oxygen, and temperature, and conductivity)
- Parameters to be analyzed for, if appropriate
- Descriptions of soil samples and drilling cuttings can be entered in depth sequence, along with PID readings and other observations. Include any unusual appearances of the samples.

C. SUGGESTED FORMAT FOR RECORDING FIELD DATA

1. Use the left side border to record times and the remainder of the page to record information (see attached example).

2. Use tables to record sampling information and field data from multiple samples.

3. Sketch sampling locations and other pertinent information.

4. Sketch well construction diagrams.

V. Attachments

Example field notes.

0715 ARRIVE ON SITE AT XYZ SITE.
CH2M HILL STAFF:
John Smith: FIELD TEAM LEADER
Bob Builder: SITE SAFETY COORD.
WEATHER: OVERCAST + COOL, 45°F
CHANCE OF LATE SHOWERS
SCOPE: • COLLECT GROUNDWATER SAMPLES for LTM work at SITE 14
• SUPERVISE SURVEY CREW AT SITE 17
0725 BB ~~Con~~ ~~JS~~ (JS) Calibrates PID: 101 ppm/100 ppm ok
PID Model #, SERIAL #
0730 BB Calibrates HORIBA METER
Model #, SERIAL #
→ List calibration Results
0738 Survey CREW ARRIVES on SITE
→ List NAMES
0745 BB Holds H+S TALK on Slips, Trips, Falls, Ticks + AIR MONITORING
JS + SURVEY CREW ATTEND
No H+S ISSUES IDENTIFIED as CONCERNS. All work is in "Level D."
0755 JS Conducts site-WIDE AIR Monitoring
All readings = 0.0 ppm in

JS 5-12-03

SITE 14 LTM
BREATHING ZONE (BZ)
0805 Mobilize to well MW-22 to SAMPLE, surveyors SETTING UP AT SITE 17
0815 PM (PAUL PAPER PUSHER) CALLS AND INFORMS JS to collect GW SAMPLE AT well MW-44 today for 24 hour TAT ANALYSIS OF VOC'S
0820 Purging MW-22
→ RECORD WATER QUALITY DATA
JS 5-12-03
0843 Collect SAMPLE AT MW-22 for total TAL Metals and VOC'S. No Dissolved Metals Needed PER PM.
0905 JS + BB Mobilize to SITE 17 to show surveyors wells to Survey.
0942 Mobilize to well MW-22 to Collect SAMPLE
0950 CAN not ACCESS WELL MW-22 due to BASE OPERATIONS; CONTACT PAUL PAPERPUSHER AND HE STATED he will check on GAINING ACCESS with BASE contact.
0955 Mobilize to well MW-19

JS 5-12-03

STANDARD OPERATING PROCEDURE

Mini RAE Photoionization Detector (PID)

I. Purpose

The purpose of this SOP is to provide general reference information for using the Mini RAE PID in the field. Calibration and operation, along with field maintenance, will be included in this SOP.

II. Scope

This procedure provides information on the field operation and general maintenance of the Mini RAE PID. Review of the information contained herein will ensure that this type of field monitoring equipment will be properly utilized. Review of the owner's instruction manuals is a necessity for more detailed descriptions.

III. Definitions

Volatile Organic Compound (VOC) – Expresses the VOC concentration in ppm

ppm - parts per million: parts of vapor or gas per million parts of air by volume.

IV. Procedures

The Mini RAE utilizes the principle of a detecting sensor. The PID operates on the principle that most organic compounds and some inorganic compounds are ionized when they are bombarded by high-energy ultraviolet light. These compounds absorb the energy of the light, which excites the molecules and results in a loss of electron and the formation of a positively charged ion. The number of ions formed and the ion current produced is directly proportional to mass and concentration. The amount of energy required to displace an electron is called photo ionization potential (PIP). The air sample is drawn into a UV lamp using a pump or a fan. The energy of the lamp determines whether a particular chemical will be ionized. Each chemical compound has a unique ionizing potential. When the UV light energy is greater than the ionization potential of the chemical, ionization will occur. When the sample is ionized, the electrical signal is displayed on an analog or digital output. Although the output does not distinguish between chemicals, it does detect an increase in the ion current. If only one chemical is present in the air, it is possible to use PIDs quantitatively. Chemical structure and lamp intensity affects the sensitivity of the instrument to a given contaminant. All PID readings are relative to the calibration gas, usually isobutylene. It is important to calibrate the PID in the same temperature and elevation that the equipment will be used, and to determine the background concentrations in the field before taking measurements. For environments where background readings are high, factory zero calibration gas should be used.

Note: For volatile and semi-volatile compounds, knowing the PIP is critical in determining the appropriate instrument to use when organic vapor screening. Consult the QAPP and manufacturer's manual to determine that the proper instrument has been selected for the contaminate vapors of interest. If an expected compound at a site has a PIP less than 11.7 eV, it is possible to use a PID. If the ionization potential is greater than 11.7eV, an FID is required.

The following subsections will discuss Mini RAE calibration, operation, and maintenance. These sections, however, do not take the place of the instruction manual.

A. Calibration

These instructions are for the Mini RAE 2000. If using the Mini RAE 3000, please see the operator's manual for instructions.

Start up Instrument

- Press **Mode** button
- Observe displays:

```
On!……..
```

```
Version X.XX
```

```
Model Number
SN XXXX
```

```
Date Time
Temp
```

- After the monitor is turned on and it runs through the startup menus, the display will read "Ready". Press the **[Y/+]** key to start the pump.
- The pump will start, the seconds will count down to zero, and the instrument will be ready for use

Calibration Check and Adjustment

Allow instrument to warm up for 15 minutes.

- Depress the **[N/-]** key first, then while depressing the **[N/-]**, depress the **[Mode]** key also and depress both keys for 5 seconds.
- Display will read:

```
Calibrate
Monitor?
```

- Press the **[Y/+]** key
- Display will read:

```
Fresh Air
Calibration?
```

- Perform the Fresh Air Calibration in an area free of any detectable vapor near your work zone.
- Press the **[Y/+]** key
- Display will read:

```
Zero….
In progress…
```

```
Wait…
```

```
Update data…
```

```
Zeroed…
```

```
Reading = X.X ppm
```

- Press any key and the display will go back to:

```
Fresh Air
Calibration?
```

- Press the **[N/+]** key
- Display will read:

```
Span/Cal?
```

- Press the **[Y/+]** key
- Display will read:

```
Isobutylene = 100 ppm
```

```
Apply Gas Now!
```

- Press the **[Y/+]** key
- Apply calibration gas – use either HAZCO Services Part Number R-SGRAE4 or Rae Systems Part Number 008-3002 – using a .5 LPM regulator and direct tubing.

```
Wait…30
```

- The display will count down showing the number of remaining seconds:

```
Reading = 100
```

Update data, span cal done. Turn off gas!

- Calibration readings between 99 and 102 ppm are within the acceptable range.
- Display will read:

Span/Cal?

- **CALIBRATION IS COMPLETE!**
- Press any key to return to operational mode.

B. Operation

Due to the Mini RAE having many functions in terms of operation, it is recommended that you follow the operational procedures as outlined in the instruction manual from pages 2-5 to 2-14.

C. Site Maintenance

After each use, the meter should be recharged and the outside of the instruments should be wiped clean with a soft cloth.

D. Scheduled Maintenance

Function	Frequency
Check alarm and settings	Monthly/before each use
Clean screens and gaskets around sensors	Monthly
Replace sensors	Biannually or when calibration is unsuccessful

V. Quality Assurance Records

Quality assurance records will be maintained for each air monitoring event. The following information shall be recorded in the field logbook.

- Identification - Site name, date, location, CTO number, activity monitored, (surface water sampling, soil sampling, etc), serial number, time, resulting concentration, comments and identity of air monitoring personnel.
- Field observations - Appearance of sampled media (if definable).
- Additional remarks (e.g, Mini RAE had wide range fluctuations during air monitoring activities.)

VI. References

Mini RAE 2000 Portable VOC PGM-7600, RAE Systems, Revision E, May 2005.

MiniRAE 2000

Portable VOC Monitor
PGM-7600

OPERATION AND MAINTENANCE MANUAL

(Document No.: 011-4001-000)
Revision E, May 2005

RAE SYSTEMS

ISO 9001 CERTIFIED

ATTENTION!

For European Applications

A. CE 0575 Ex II 1G/2G
DEMKO 03 ATEX 0204759X
Eex ia IIC T4

B. **Recharge batteries only in non-hazardous locations.**

C. **Do not connect external cable to serial interface jack in hazardous locations.**

D. **Use RAE Systems Adapter P/N 500-0072 for connection to communication port and charging jack only in a non-hazardous area.**

Table of Contents

1. GENERAL INFORMATION 1-1
1.1 General Specifications 1-2
2. OPERATION OF MINIRAE 2000 2-1
2.1 Physical Description 2-2
2.2 Keys and Display 2-3
2.3 Power On/Off 2-4
2.4 Operation 2-5
2.4.1 Survey Mode 2-6
2.4.2 Hygiene Mode 2-14
2.5 Alarm Signals 2-16
2.6 Preset Alarm Limits and Calibration 2-18
2.7 Integrated Sampling Pump 2-19
2.8 Back Light 2-20
2.9 Datalogging 2-21
3. OPERATION OF ACCESSORIES 3-1
3.1 Standard Kit and Accessories 3-2
3.2 Optional Accessories 3-5
4. PROGRAMMING OF MINIRAE 2000 4-1
4.1 Programming Mode 4-2
4.2 Keys for Programming Mode 4-3
4.3 Entering into Programming Mode 4-4
4.4 Calibrate and Select Gas 4-5
4.4.1 Fresh Air Calibration 4-8
4.4.2 Span Calibration 4-9
4.4.3 Select Cal Memory 4-11
4.4.4 Change Span Value 4-12
4.4.5 Modify Cal Memory 4-13
4.4.6 Change Correction Factor 4-14

4.5 Change Alarm Limits 4-15
4.5.1 Change Low Alarm Limit 4-17
4.5.2 Change STEL Limit 4-18
4.5.3 Change TWA Limit 4-19
4.6 View or Change Datalog 4-20
4.6.1 Reset Peak/Minimum 4-21
4.6.2 Clear Data 4-223
4.6.3 Change Data Period 4-2324
4.6.4 Change Average Type 4-245
4.7 Change Monitor Setup 4-256
4.7.1 Change Operation Mode 4-267
4.7.2 Change Site ID 4-278
4.7.3 Change User ID 4-2829
4.7.4 Change Alarm Mode? 4-290
4.7.5 Change User Mode 4-301
4.7.6 Change Date 4-312
4.7.7 Change Time 4-323
4.7.8 Change Lamp 4-334
4.7.9 Change Unit 4-345
4.7.10 Change Dilution Ratio 4-356
4.7.11 Change Output? 4-367
4.7.12 Change DAC Range? 4-378
4.7.13 Set Temperature Unit? 4-389
4.8 Exit Programming Mode 4-390
5. THEORY OF OPERATION 5-1
6. MAINTENANCE 6-1
6.1 Battery Charging and Replacement 6-2
6.2 PID Sensor & Lamp Cleaning /Replacement 6-4
6.3 Sampling Pump 6-7
6.4 Turning on the UV Lamp 6-9
7. TROUBLESHOOTING 7-1
7.1 Troubleshooting Table 7-2
APPENDIX A. QUICK REFERENCE GUIDE A-2

⚠ WARNING ⚠

- Do NOT proceed before reading -

This manual must be carefully read by all individuals who have or will have the responsibility for using, maintaining, or servicing this product.

The product will perform as designed only if it is used, maintained, and serviced in accordance with the manufacturer's instructions.

CAUTION!!

To reduce the risk of electric shock, turn off power before removing the monitor cover. Disconnect the battery before removing sensor module for service. Never operate the monitor while the cover is removed. Remove monitor cover and sensor module only in an area known to be non-hazardous.

The model PGM-7600 equipment is classified as to intrinsic safety for use in class I, division 1, groups A, B, C, D, or non-hazardous locations only.

Special Notes

-1-

When the MiniRAE 2000 Monitor is taken out from the transport case and turned on for the first time, there may be some residual organic or inorganic vapor trapped inside the detector chamber. The initial PID sensor reading may indicate a few ppm. Enter an area known to be free of any organic vapor and turn on the monitor. After running for several minutes, the residual vapor in the detector chamber will be cleared and the reading should return to zero.

-2-

The battery of the MiniRAE 2000 monitor will discharge slowly even if it is turned off. If the monitor has not been charged for 5-7 days, the battery voltage will be low. Therefore, it is a good practice to always charge the monitor before using it. It is also recommended to fully charge the monitor FOR AT LEAST 10 HOURS before first use. See Section 7 for more information on battery charging and replacement.

WARNINGS

STATIC HAZARD: Clean only with damp cloth.

For safety reasons this equipment must be operated and serviced by qualified personnel only. Read and understand instruction manual completely before operating or servicing.

Use only RAE Systems battery packs, part nos. 012-3050, 012-3051 or 012-3052. This instrument has not been tested in an explosive gas/air atmosphere having an oxygen concentration greater than 21%. Substitution of components may impair intrinsic safety. Recharge batteries only in non-hazardous locations.

The calibration of all newly purchased RAE Systems instruments should be tested by exposing the sensor(s) to known concentration calibration gas before the instrument is put into service.

For maximum safety, the accuracy of the MiniRAE 2000 should be checked by exposing it to a known concentration calibration gas before each day's use.

AVERTISSEMENTS

DANGER RISQUE D'ORIGINE ELECTROSTATIQUE: Nettoyer uniquement avec un chiffon humide.

Pour des raisons de sécurité, cet équipment doit être utilisé, entretenu et réparé uniquement par un personnel qualifié. Étudier le manuel d'instructions en entier avant d'utiliser, d'entretenir ou de réparer l'équipement.

Utiliser seulement l'ensemble de batterie RAE Systems, la reference 012-3050, 012-3051 au 012-3052. Cet instrument n'a pas été essayé dans une atmosphère de gaz/air explosive ayant une concentration d'oxygène plus élevée que 21%. La substitution de composants peut compromettre la sécurité intrinsique. Ne charger les batteries que dans emplacements désignés non-dangereuse.

La calibration de toute instruments de RAE Systems doivent être testé en exposant l'instrument a une concentration de gaz connue par une procédure diétalonnage avant de mettre en service l'instrument pour la première fois.

Pour une securite maximale, la sensibilité du MiniRAE 2000 doit être verifier en exposant l'instrument a une concentration de gaz connue par une procédure diétalonnage avant chaque utilisation journalière.

1. GENERAL INFORMATION

MiniRAE 2000 Portable VOC Monitor (Model PGM 7600) is a compact monitor designed as a broadband VOC gas monitor and datalogger for work in hazardous environments. It monitors Volatile Organic Compounds (VOC) using a Photo-Ionization Detector (PID) with a 9.8 eV, 10.6 eV, or 11.7 eV gas discharge lamp. Features are:

- **Lightweight and Compact**
  -Compact, light weight (19 oz.) and rugged design
  -Built-in sample draw pump

- **Dependable and Accurate**
  - Up to 10 hours of continuous monitoring with rechargeable battery pack
  - Designed to continuously monitor VOC vapor at ppm levels

- **User Friendly**
  -Preset alarm thresholds for STEL, TWA, low and high level peak values. Audio buzzer and flashing LED display are activated when the limits are exceeded.

- **Datalogging Capabilities**
  -15,000 point datalogging storage capacity for data download to PC

MiniRAE 2000 consists of a PID with associated microcomputer and electronic circuit. The unit is housed in a rugged ABS + PC case with a backlit 1 line by 8 character dot matrix LCD and 3 keys to provide easy user interface.

1.1 General Specifications

Table 1.1

Portable VOC Monitor Specification	
Size:	8.2"L x 3.0"W x 2.0"H
Weight:	19.5 oz with battery pack
Detector:	Photo-ionization sensor with 9.8, 10.6, or 11.7 eV UV lamp
Battery:	A 4.8V /1250 mAH Rechargeable Nickel Metal Hydride battery pack (snap in, field replaceable)
Battery Charging:	10 hours charge through built-in charger
Operating Hours:	Up to10 hours continuous operation
Display:	1 line by 8 characters 5x7 dot matrix LCD (0.4" character height) with LED back light automatically in dim light
Range, Resolution & Response time (t_{90}):	
Isobutylene (calibration gas)	
	0-99 ppm 0.1 ppm 2 sec
	100-1,999 ppm 1.0 ppm 2 sec
	2000-10,000 ppm 1.0 ppm 2 sec
Measurement Accuracy (Isobutylene):	
	0 – 2000 ppm: ± 2 ppm or 10% of reading.
	> 2000 ppm: ± 20% of reading
PID Detector:	Easy access to lamp and sensor for cleaning and replacement
Correction Factors:	Built-in 102 VOC gases
Calibration:	Two-point field calibration of zero and standard reference gas
Calibration Memory:	
	Store up to 8 separate calibration, alarm limits and span value
Inlet Probe:	Flexible 5" tubing
Keypad:	1 operation key and 2 programming keys

GENERAL INFORMATION

Direct Readout:	Instantaneous, average, STEL and peak value, battery voltage and elapsed time
Intrinsic Safety:	UL & cUL Class 1, Division I, Group A,B,C,D, Temperature Code T3C (US & Canada); CE 0575 Ex II 1G DEMKO 02 ATEX 0204759 Eex ia IIC T4 (Europe)
EM Interference:	No effect when exposed to 0.43 W/cm^2 RF interference (5 watt transmitter at 12 inches)
Alarm Setting:	Separate alarm limit settings for Low, High, STEL and TWA alarm
Operating Mode:	Survey or Hygiene mode
Alarm:	90 dB buzzer and flashing red LEDs to indicate exceeded preset limits, low battery voltage, or sensor failure.
External Alarm:	Optional plug-in pen-size vibration alarm or remote alarm
Alarm Mode:	Latching or automatic reset
Real-time Clock:	Automatic date and time stamps on data logged information
Datalogging:	15,000 points with time stamp, serial number, user ID, site ID, etc.
Communication:	Upload data to PC and download instrument setup from PC through RS-232 port
Sampling Pump:	Internally integrated. Flow rate: 450-550 cc/min.
Temperature:	0° to 45°C (32° to 113°F)
Humidity:	0 % to 95 % relative humidity (non-condensing)
Housing:	ABS + PC, conductive coating, splash and dust proof, will withstand 1 meter drop test with rubber boot
Attachment:	Wrist strap, rubber boot and belt clip

2. OPERATION OF MINIRAE 2000

The MiniRAE 2000 Portable VOC Monitor is a compact Monitor designed as a broadband VOC gas monitor and datalogger for work in hazardous environments. It gives real time measurements and activates alarm signals whenever the exposure exceeds preset limits. Prior to factory shipment the MiniRAE 2000 is preset with default alarm limits and the sensor is pre-calibrated with standard calibration gas. However, the user should test the instrument and verify the calibration before the first use. After the monitor is fully charged and calibrated, it is ready for immediate operation.

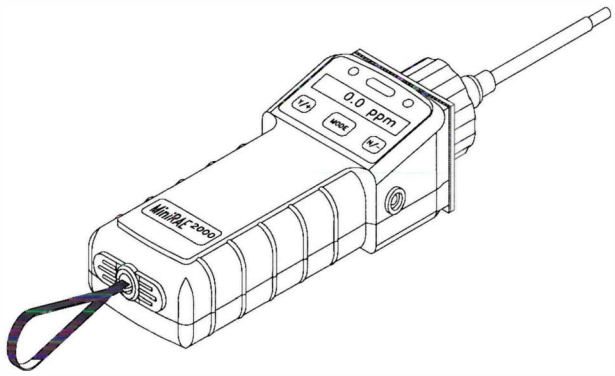

Figure 2-1 MiniRAE 2000

2.1 Physical Description

The main components of the MiniRAE 2000 Portable VOC monitor include:

- Three keys for user to interact with the monitor: 1 operation key and 2 programming keys for normal operation or programming of the monitor
- LCD display with back light for direct readout and calculated measurements
- Buzzer and red LED's for alarm signaling whenever the exposures exceed preset limits
- Wrist strap
- Charge contact for plugging directly to the charging station
- Gas entry and exit ports
- Serial communication port for PC interface
- External alarm and analog output port
- Protective rubber cover

2.2 Keys and Display

Figure 2.2 shows the LCD display and the keypad on the front panel of the monitor. The function of the 3 keys during normal operation are summarized below:

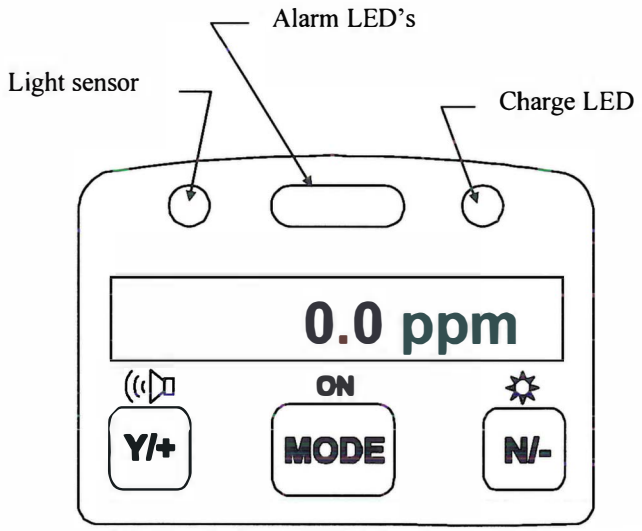

Figure 2-2 LCD Display and Keypad

Key	Function in Normal Operation
[MODE]	-Turn on/off the power* and step through menu items
[N/-]	-Toggle on/off the back light, negative acknowledge, decrease value
[Y/+]	-Start measurement, positive acknowledge, increase value value

* Pressing and holding **[MODE]** key for 5 seconds turns off the power to the monitor. Monitor will beep once per second and display countdown timer during power-down sequence. Press **[MODE]** key momentarily to step through menu items. To save time, press any key during message scrolling to skip to the end of the message.

2.3 Power On/Off

To turn on the MiniRAE 2000 portable VOC monitor, press **[MODE]** key for one second and release. The audio buzzer will beep once and the air pump will turn on. The display will show "ON!.." and then "Ver n.nn" to indicate the unit's current firmware version number. Next displayed are the serial number, the model number, Operating mode, current date and time, unit internal temperature, gas selected, high low, STEL, TWA/AVG alarm limits, battery voltage, and shut off voltage. Also displayed are internal mode settings such as User mode, Alarm mode, datalog time remaining and log periods in the respective order.

To turn off the MiniRAE 2000 portable VOC monitor, press and hold the **[MODE]** key for 5 seconds. The monitor will beep once per second during the power-down sequence with a count down timer showing the number of remaining seconds. The message "Off!.." flashes on the LCD display and the display will go blank indicating that the monitor is turned off.

Data protection during power off

When the monitor is turned off, all the current real time data including last measured value are erased. However, the datalog data is preserved in non-volatile memory. Even if the battery is disconnected, the datalog data will not be lost. While the power is off, the real time clock will continue to operate until the battery is completely drained (usually in 4-5 days without any charging). If the battery is completely drained or is disconnected from the monitor for more than 30 minutes, the real time clock will be lost. In this case, the user needs to enter the real time clock information again, as described in Section 4, or send the PC clock during configuration through the PC communication.

2.4 Operation

The **MiniRAE 2000** VOC monitor has two operation modes: **Survey** and **Hygiene** mode. The **Survey mode** allows the user to manually start and stop the monitoring/measuring operation and display certain exposure values. In the **Hygiene mode,** the monitor runs continuously after the monitor is turned on. Refer to Section 4.7.1 for switching between the two modes.

2.4.1 Survey Mode

After the monitor is turned on, it runs through the start up menu. Then the message "**Ready...**" is displayed (see figure below).

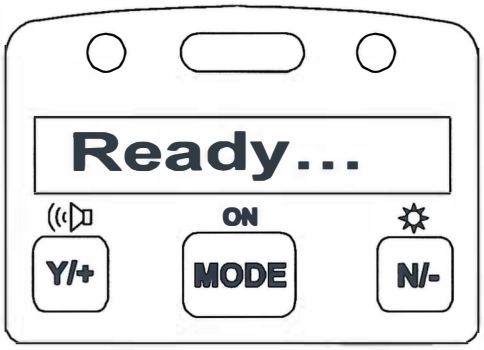

At this point, the user has two options:

1. Step through the Main Menu.
2. Take a measurement.

Press the **[MODE]** button to step through the Main Menu. Press the **[Y/+]** button to proceed to take a measurement.

The Main Menu

Press the **[MODE]** button to enter the Main Menu. Press the **[Y/+], [MODE]** or **[N/-]** as indicated in the flow chart below to step through the Main Menu. The PID sensor and pump are turned off during this time.

The Main Menu functions are:

- **Ready…**
- **Check**
- **Site ID = xxxx**
- **Gas = xxxx**
- **Warm up**
- **X.x ppm**
- **Stop?**
- **TWA/Avg x.x ppm**
- **STEL x.x ppm**
- **Peak x.x ppm**
- **Run time hh:mm**
- **Bat = X.XV**
- **Mm/dd/yy**
- **hh:mm**
- **T = xxxF [date, time and temperature (°C or °F)]**
- **Log On/Off?**
- **PC Comm?**
- **Survey**

These functions are arranged in a "round robin" order. To select a specific function, press the button as shown below until the desired function appears.

Main Menu

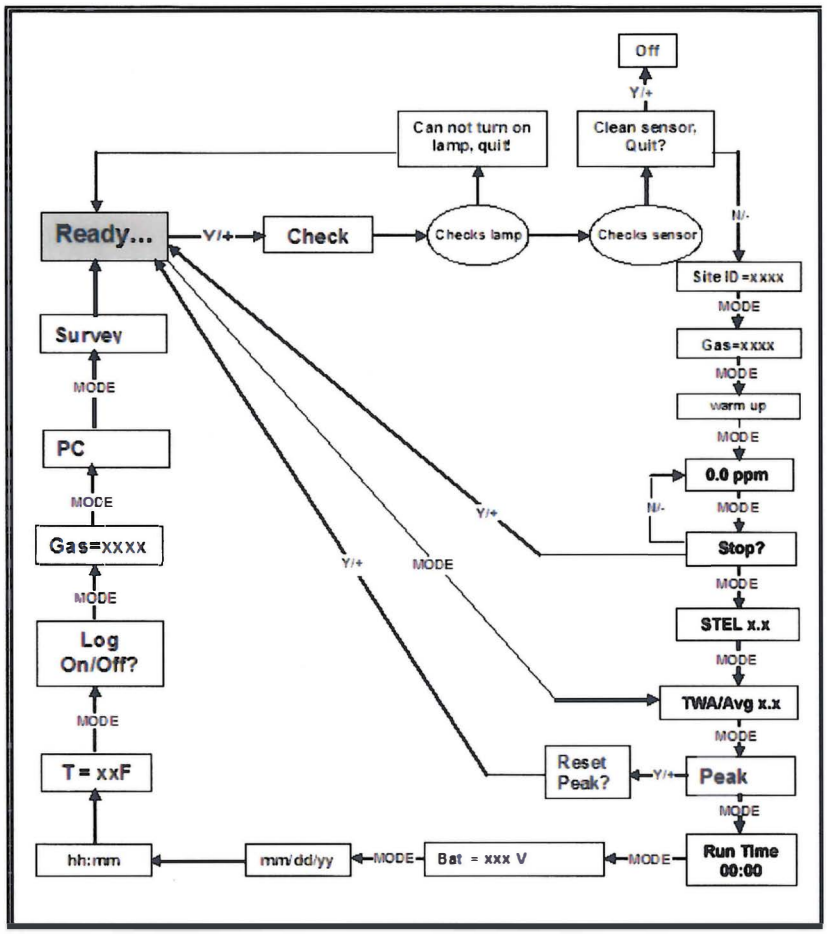

The Main Menu Functions

- **Ready...:** Indicates that the monitor is ready to take a measurement or to step through the Main Menu. Press the **[Y/+]** button to advance to taking a measurement (read "Taking a Measurement" on Page 2-12 for details).

  Note: The **Ready...** screen is skipped if the menu is cycled through while a measurement is running.

- **Check...:** This message displays while the system is checking the lamp and the sensor. If the lamp test succeeds, the system will progress to checking the sensor. If the lamp test does not succeed, the display will read **Can not turn on lamp, quit!**

  - **Can not turn on lamp, quit!:** This message displays when the lamp does not turn on. The system will automatically return to **Ready...** allowing the user to test the lamp again. If the lamp fails a second time, turn the monitor off and refer to Section 7.2 "**PID Sensor & Lamp Cleaning / Replacement**".

  - **Clean Sensor, Quit?:** This message displays when the sensor requires cleaning. Press the **[Y/+]** button to turn the monitor off and clean the sensor. Press the **[N/-]** button and the system will progress to the **Site ID = xx**

- **Site ID = xxxx:** This display shows the Site ID and indicates that the monitor is about to start taking measurements (read "Taking a Measurement" for details)

  Note: This display appears only after a measurement has been started. It does not appear when the user is cyling through the Main Menu and the monitor is idling.

- **Gas = xxxx:** This display identifies the gas to be measured and indicates that the monitor is about to take a measurement (read "Taking a Measurement" for details)

Note: This display appears only after a measurement has been started. It does not appear when the user is cyling through the Main Menu and the monitor is idling.

- **x.x ppm:** (read "Taking a Measurement" for details)

  Note: This display appears only after a measurement has been started. It does not appear when the user is cyling through the Main Menu and the monitor is idling.

- **TWA/Avg:** Displays (in ppm) the Time Weighted Average (TWA) or the Average since the start of the measurement. The average is recalculated every minute.

- **STEL:** Displays the Short Term Exposure Limit.

- **PEAK:** Displays (in ppm) the highest instantaneous reading since the start of the measurement. If **[Y/+]** is pressed while the peak reading is displayed, the unit will ask **Reset Peak?**. If **[Y/+]** is pressed again, the peak value will be cleared and the display will return to the **Ready...** message or instantaneous reading. The peak reading is automatically reset when a new measurement is started by pressing **[Y/+]** from the **Ready...** screen.

- **Run time hh:mm:** The duration of the current measurement period.

- **Bat = X.XV:** The current battery voltage.

  Note: A fully charged battery pack should show 4.8 volts or higher. When the battery voltage falls below 4.4 volts, a flashing **"Bat"** will appear as a warning message. At that point, you have 20-30 minutes of run time remaining. When the battery voltage falls below 4.2 volts the monitor turns off automatically.

- **Mm/dd/yy:** The current date.

- **hh:mm:** The current time (24-hour format)

- **T = xxxF:** The internal unit temperature in degrees Fahrenheit. (see Section 4.7.13 to change temperature units)
- **Log on/Off?:** Allows the user to start datalogging of the current measurement. A superscript "L" flashes in the ppm measurement display when datalogging is on. This screen is not shown when datalogging is disabled or when the monitor is not operating in manual start/stop mode.
- **PC Comm?:** This function enables the user to upload data from the MiniRAE 2000 to a Personal Computer (PC) or send/receive configuration information between a PC and the Mini E 2000. Press **[MODE]** to return to **Ready...** .

  To communicate with a PC, connect the monitor to the serial port of a PC and start the Mini E 2000 application software. Press the **[Y/+]** button and the LCD displays **"pause monitor, ok?"** Press the **[Y/+]** button one more time, and the display shows **"Comm..."** The monitor is now ready to receive commands from the PC.
- **Survey:** This function displays the Current Operating Mode (**Survey** or **Hygiene**).

Taking a Measurement

There are two ways to start a measurement.

1. Operating in Hygiene mode.
2. Manually start and stop measurement in Survey mode.

To start a measurement in Hygiene mode, please refer to Section 4.7.1, "**Change Operation Mode**". To start a measurement in Survey Mode, the Mini E 2000 monitor must first be in the "Ready..." mode. This is the mode to which the monitor normally powers up.

Measurement phases

1. Ready
2. Start measurement
3. Measurement display and datalogging
4. Stop measurement

Ready

The display reads **Ready…** indicating the unit is ready to start a measurement.

Start Measurement

Press the **[Y/+]** button to start the check cycle (see above), and then the measurement cycle.

After completing the **Check** cycle, the display will show the **Site ID** and then the **Gas** selected for measurement. The pump will start and the reading will be displayed. The **Peak** and **Average** values will be automatically reset to zero.

Measurement Display and Datalog

Instantaneous readings of the gas concentration in parts per million (ppm) are updated every second. A flashing superscript **L** is displayed when datalogging is on. Datalog information is saved only after one full datalog period is completed.

Stop Measurement

Press the **[MODE]** button and the display shows Stop? Press **[N/-]** to continue measurement and **[Y/+]** to stop the measurement and datalog event. The pump stops automatically when measurement is stopped. Peak and average values for the current measurement can be read in idle mode until a new measurement is started.

Automatic Increment of Site ID

Every time a measurement is taken, the site ID will be incremented by one automatically in Survey mode.

Variable Alarm Signal

In Survey Mode, if the measurement exceeds the low alarm limit, the buzzer and flashing alarm are activated and will beep/flash once per second. The alarms will increase in frequency as the gas concentration approaches the high alarm limit reaching 8 times per second when the high alarm has been exceeded.

Press **[Y/+]** key to clear if latching alarm.

2.4.2 Hygiene Mode

In Hygiene Mode, the unit will continuously taking measurements, once the power is turned on. After the initial start-up sequence displaying the current monitor settings, the LCD displays the instantaneous readings.

The Hygiene operation menu displays include:

- **Real time readings in ppm**
- **Current TWA/Avg, STEL and Peak values (see Section 4.6.6)**
- **Run time**
- **Current battery voltage**
- **Date, time and temperature**
- **Log on/off?**
- **Gas name**
- **PC communication?**
- **Hygiene**

Detailed description of most of these displays are the same as Section 2.4.1.

HYGIENE MODE MAIN MENU

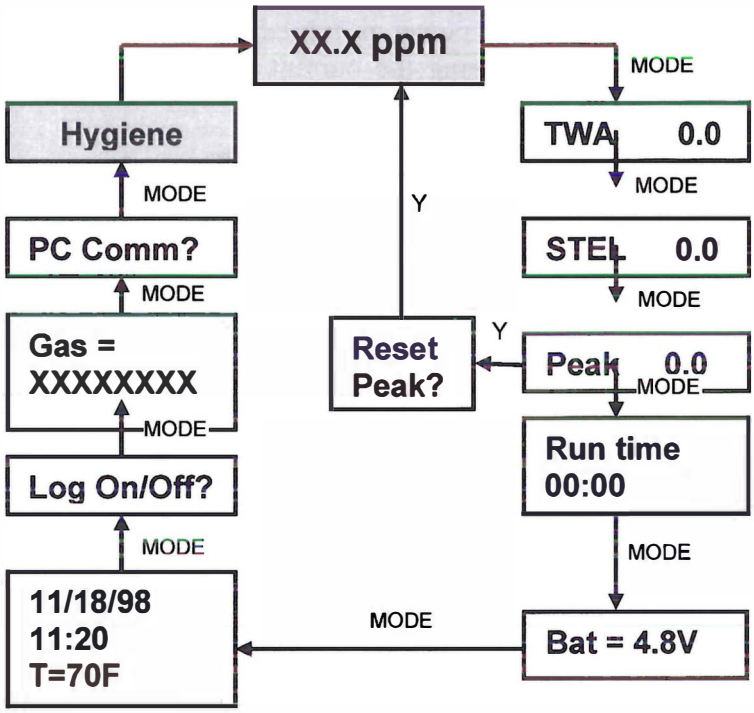

To choose a specific display, press the **[MODE]** key one or more times until the desired display appears, or the **[Y/+]** key where indicated with a Y.

Note: To get back to instantaneous reading from any of the above display, press **[MODE]** key repeatedly until the "XX.X ppm" display appears.

2.5 Alarm Signals

During each measurement period, the gas concentration is compared with the programmed alarm limits (gas concentration alarm limit settings: Low, High, TWA and STEL). If the concentration exceeds any of the preset limits, the loud buzzer and red flashing LED are activated immediately to warn the user of the alarm condition.

In addition, the MiniRAE 2000 will alarm if one of the following conditions occurs: battery voltage falls below a pre-set voltage level (4.4 V), failure of UV lamp, pump stall, or when the datalog memory is full. When the low battery alarm occurs, there will be approximately 20-30 minutes of operating time remaining. When the battery voltage falls below 4.2 V, the monitor will turn off automatically.

Alarm Signal Summary:

Condition	Alarm Signal
Gas exceeds "High Alarm" limit	3 beeps/flashes per second
Gas exceeds "Low Alarm" limit	2 beeps/flashes per second
Gas exceeds "TWA" limit	1 Beeps/flashes per seconds
Gas exceeds "STEL" limit	1 Beeps/flashes per seconds
Pump failure	3 beeps/flashes per second plus "Pump" message on LCD
PID lamp failure	3 beeps/flashes per second plus "Lamp" message on LCD
Low battery	1 flash per second, 1 beep per minute plus "Bat" message on LCD
Memory full	1 flash per second plus "Mem" message on LCD

Alarm Signal Testing:

Under normal non-alarm conditions, it is possible to test the MiniRAE 2000 LED and buzzer in Special Diagnostic Mode (see Section 8 for details).

2.6 Preset Alarm Limits and Calibration

The MiniRAE 2000 portable VOC monitor is factory calibrated with standard calibration gas, and is programmed with default alarm limits. There are 102 gas settings stored in the library. Some examples of calibration and alarm limits are shown below. Refer to Section 4 on programming procedures for selecting a different gas, perform a calibration or set new alarm limits.

Factory Calibration and Preset Alarm Limits

Cal Gas	Cal Span	unit	Low	High	TWA	STEL
Isobutylene	100	ppm	50	100	100	250
Hexane, n-	100	ppm	500	750	500	750
Xylene, m-	100	ppm	100	150	100	150
Benzene	5	ppm	2	5	5	2
Styrene	50	ppm	20	40	20	40
Toluene	100	ppm	50	100	50	100
Vinyl Chloride	10	ppm	5	10	5	10
Custom	100	ppm	50	100	50	100

2.7 Integrated Sampling Pump

The MiniRAE 2000 portable VOC monitor includes an integrated sampling pump. This is a diaphragm type pump that provides a 500-600 cc per minute flow rate. Connecting a Teflon or metal tubing with 1/8 inch inside diameter to the gas inlet port of the MiniRAE 2000, this pump can pull in air samples from 200 feet away horizontally, or 90 feet vertically, at about 3 feet per second flow speed.

The pump turns on when a measurement is started, and turns off when the sample is manually stopped in Survey mode or when the unit is turned off from Hygiene Mode.

If liquid or other objects are pulled into the inlet port filter, the monitor will detect the obstruction and shut down the pump immediately. The alarm will be activated and a flashing error message "Pump" will be also displayed on the LCD display.

The user should acknowledge the pump shut off condition by clearing the obstruction and pressing the **[Y/+]** key to re-start the pump.

The pump stall threshold is set in the special Diagnostic Mode (Section 8).

2.8 Back Light

The LCD display is equipped with an LED back light to assist in reading the display under poor lighting conditions. Pressing and holding the **[N/-]** key for one second in normal operation can turn on the backlight. The backlight can be turned off by pressing **[N/-]** a second time. If the **[N/-]** key is not pressed, the back light will be turned off automatically after a pre-programmed time-out period to save power.

In addition, the ambient light is sensed and the back light will be turned on automatically if the ambient light is below a threshold level. The back light is turned off automatically when the ambient light exceeds the threshold level.

See Section 8 for instructions on how to set the light threshold level.

Note: The LED backlight consumes about 20-30% of the total average current, when the instrument is idle or not taking a measurement.

2.9 Datalogging

During datalogging, the MiniRAE 2000 Portable VOC monitor flashes a superscript "L", on the display to indicate that datalogging is enabled. The monitor stores the time stamp, sample number, and measured gas concentration at the end of every sample period (when data logging is enabled). In addition, the following information are stored: user ID, site ID, serial number, last calibration date, and alarm limits. All data are retained (even after the unit is turned off) in non-volatile memory so that it can be down loaded at a later time to a PC.

Datalogging event

When Datalogging is enabled, measurement readings are being saved. These data are stored in "groups" or "events. A new event is created and stored each time the monitor is turned on, or a configuration parameter is changed, or datalogging is interrupted (e.g. Communication with PC during Hygiene mode). Information, such as start time, user ID, site ID, gas name, serial number, last calibration date, and alarm limits will be recorded.

Datalogging sample

After an event is recorded, the unit records a shorter form of the data. This data contains: the sample number, time (hour/minute) and gas concentration.

3. OPERATION OF ACCESSORIES

The accessories for the MiniRAE 2000 include:

- An AC Adapter (Battery Charger)
- Alkaline battery holder
- Water Trap Filter

Optional Accessories:

- Dilution Fitting
- Calibration adapter
- Calibration regulator and Flow controller
- Organic Vapor Zeroing kit

3.1 Standard Kit and Accessories

1) AC Adapter (Battery Charger)

WARNING

To reduce the risk of ignition of hazardous atmospheres, recharge battery only in area known to be non-hazardous. Remove and replace battery only in area known to be non-hazardous.

Ne charger les batteries que dans emplacements designés non-dangereuses.

A battery charging circuit is built into the MiniRAE 2000 monitor. It only needs a regular AC to 12 V DC adapter (wall mount transformer) to charge the monitor.

To charge the battery inside the MiniRAE 2000 monitor:

1. Power off the Monitor.
2. Connect the AC adapter (or the optional automotive charging adapter) to the DC jack on the MiniRAE 2000 monitor. If the unit was off, it will automatically turn on.
3. The first message displayed will be "Deep discharge?" The unit will ask this question for three times. If the user wants to discharge the battery pack, affirm this query with the [Y/+] key, otherwise the unit will move on to the charge mode directly.

4. While charging, the display message will alternate between "Charging" and "Bat=x.xV" (x.x is the present battery voltage). The LED should be red in color when charging.

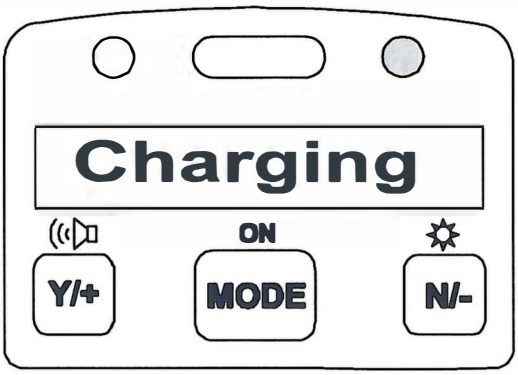

5. When the battery is fully charged, the LED will change from red to green and the message "Fully charged" will appear on the display. After the battery is fully charged, the unit will enter the "trickle charge" mode. In which, the red LED will turn on for several seconds every minute, to maintain the full charge.

A completely discharged MiniRAE 2000 monitor will be charged to full capacity within 10 hours. The battery will be drained slowly even if the monitor is turned off. If the monitor has not been charged for 7-10 days, the battery voltage will be low.

The factory-supplied battery is designed to last for 10 hours of normal operation (no alarm, no back light condition), for a new battery under the best condition. As the battery becomes older or is subject to adverse conditions (such as cold ambient temperature), the battery capacity will be reduced significantly.

2) Alkaline Battery Holder

An alkaline battery holder is supplied with each MiniRAE 2000. It accepts four AA size alkaline batteries and can be used in place of the Ni-MH or Ni-Cd battery pack to provide approximately 12-14 hours of operation. The adapter is intended to be used in emergency situations when there is no time to charge the Ni-Cd or Ni-MH battery pack.

To install the adapter, remove the cover of the battery compartment. Remove the Ni-Cd or Ni-MH battery pack from the battery compartment and replace with the alkaline battery adapter. Replace the battery compartment cover.

The internal charging circuit is designed to prevent damage to alkaline batteries and the charging circuit when alkaline batteries are installed inside the monitor.

***Note*:** The AA Alkaline battery adapter supplied by RAE Systems Inc. is intrinsically safe!

3) Water Trap Filter

The water trap filter is made of PTFE (Teflon®) membrane with a 0.45 micron pore size to prevent water from being sucked into the sensor manifold, which would cause extensive damage to the monitor. It will also remove any dust and other particles from entering the monitor and prolong the operating life of the sensor. To install the water trap, simply insert it to the front of the inlet tube of the MiniRAE 2000 monitor.

3.2 Optional Accessories

1) Dilution Fitting

The user may wish to install a dilution fitting on the inlet to dilute the gas samples. One application for a dilution fitting is to measure organic gas when the concentration exceeds the upper limit of the sensor range.

Make sure to set the dilution ratio in the programming mode (see Section 4.7.9) so that the correct gas reading will be displayed when the dilution fitting is used.

WARNING: To use a dilution fitting, the user must have the monitor located in a clean atmosphere outside the confined space and use a remote access probe or Tygon tubing to measure the gas concentration inside the confined space.

2) Calibration Adapter

The calibration adapter for the MiniRAE 2000 is a simple 6-inch Tygon tubing with a metal adapter on one end. During calibration, simply insert the metal adapter into the regular gas inlet probe of the MiniRAE 2000 and the tubing to the gas regulator on the gas bottle.

3) Calibration Regulator and Flow Controller

The Calibration Regulator and Flow controller is used in the calibration process. It regulates the gas flow rate from the Span gas cylinder into the gas inlet of the MiniR E 2000 monitor during calibration process. The maximum flow rate allowed by the flow controller is about 0.5L/min (500 cc per min.). Alternatively, a Demand-flow Regulator or a Tedlar gas bag may be used to match the pump flow precisely.

4) Organic Vapor Zeroing kit (Charcoal filter)

The Organic Vapor Zeroing Kit is used for filtering organic air contaminants that may affect the zero calibration reading. To use the Organic Vapor Zeroing Kit, simply connect the filter to the inlet port of the MiniR E 2000.

4. PROGRAMMING OF MINIRAE 2000

The MiniRAE 2000 Monitor is built with a microcomputer to provide programming flexibility. Authorized users can re-calibrate the monitor, change the alarm limits, change site ID, user ID, lamp type, and real time clock, etc.

Programming is menu-driven to provide intuitive end-user operation. The display shows the menu options and the key pad used for menu selection and data entry.

4.1 Programming Mode

The programming mode allows the users to change the setups in the monitor, calibrate the monitor, modify the sensor configuration and enter user information, etc. The programming mode has four menu items. Each menu item includes several sub-menus to perform additional programming functions. Appendix A shows a more detailed menu tree structure.

Programming Menu

Calibrate/Select Gas?

Change Alarm Limits?

Change Datalog?

Change Monitor Setup?

Once inside the programming mode, the LCD will display the first menu. Each subsequent menu item can be viewed by pressing the **[N/-]** repeatedly until the desired menu is displayed. To enter the sub-menu of a particular menu, press **[Y/+]** key, the sub-menu will be displayed.

Return to Operation mode: To exit the programming mode and return to operation, press the **[MODE]** key once at any of the programming menu displays.

4.2 Keys for Programming Mode

The three keys perform a different set of functions during the programming mode as summarized below.

Key	Function in Programming Mode
[MODE]:	Exit menu when pressed momentarily or exit data entry mode when pressed and held for 1 second
[Y/+]:	Increase alphanumerical value for data entry or confirm (yes) for a question
[N/-]:	Decrease alphanumerical value for data entry or deny (no) for a question

4.3 Entering into Programming Mode

1. Turn on the MiniRAE 2000 monitor and wait for the **"Ready.."** message or the instantaneous reading display **"0.0 ppm"** message displayed.
2. Press and hold down both **[N/-]** and **[MODE]** keys for three seconds to enter programming mode. This delay is to prevent the user from entering programming mode by accident.
3. The first menu item "Calibrate/select Gas?" will be displayed.
4. Release both **[MODE]** and **[N/-]** keys simultaneously to start the programming mode
5. Press **[N/-]** key to scroll to the next menu item of the programming menu. Press **[Y/+]** key to select the displayed menu item.

The following Sections 4.4 - 4.7 describe the details of each menu options.

4.4 Calibrate and Select Gas

WARNINGS

The calibration of all newly purchased RAE Systems instruments should be tested by exposing the sensor(s) to known concentration calibration gas before the instrument is put into service for the first time.

For maximum safety, the accuracy of the MiniRAE 2000 should be checked by exposing it to known concentration calibration gas before each day's use.

In the first menu of the programming mode, the user can perform functions such as calibration of the MiniRAE 2000 Monitor, select default cal memories, and modify cal memories (see Table 4.4).

Table 4.4

Calibrate/Select Gas Sub-Menu
Fresh Air Cal?
Span Cal?
Select Cal Memory?
Change Span Value?
Modify Cal Memory?
Change Correction Factor?

Calibrating the MiniRAE 2000 monitor is a two-point process using "fresh air " and the standard reference gas (also known as span gas). First a "Fresh air" calibration, which contains no detectable VOC (0.0 ppm), is used to set the zero point for the sensor. Then a standard reference gas that contains a known concentration of a given gas is used to set the second point of reference.

Note: The span value must be set prior to calibrating for fresh air or span.

The user can store calibrations for up to 8 different measurement gases. The default gas selections are as follows:

Cal Memory #0.....Isobutylene

Cal Memory #1.....Hexane

Cal Memory #2.....Xylene

Cal Memory #3.....Benzene

Cal Memory #4.....Styrene

Cal Memory #5.....Toluene

Cal Memory #6.....Vinyl Chloride

Cal Memory #7.....Custom?

Memory #0 functions differently than the other 7 memories. For Memory #0, isobutylene is always the calibration gas. When the gas is changed in Memory #0 to one of 100 other preprogrammed chemicals or to a user-defined custom gas, a correction factor is applied to all the readings. During calibration, the unit requests isobutylene gas and displays the isobutylene concentration immediately following calibration, but when the unit is returned to the normal reading mode, it displays the selected gas and applies the correction factor.

The other 7 cal memories require the same calibration gas as the measurement gas. These memories may also be modified to a preprogrammed chemical or to a user-defined custom gas. In the gas library, only the gases that can be detected by the installed UV lamp will actually be displayed. Note that although the correction factor for the new gas will be displayed and can be modified, this factor is not applied when Memories #1-7 are

used. Therefore the factor will not affect the readings in these memories.

Once each of the memories has been calibrated, the user can switch between the calibrated gases by changing the cal memory without the need to recalibrate. Or the user can switch the measurement gas in Memory #0 and the appropriate correction factor will automatically be applied without the need to recalibrate. If the gas is changed in Memories #1-7, it is necessary to recalibrate.

To change a default gas from the list above to a library or custom gas, first go to Select Cal Memory (Section 4.4.3) and then proceed to Modify Cal Memory (Section 4.4.5) to enter the desired gas. If the desired compound does not appear in the preprogrammed library, the user can use the Custom_VOC entry in the library, or the name and correction factor of any of the existing compounds can be changed as described in Section 4.4.5. A list of some 300 correction factors is given in Technical Note 106, available at the website www.raesystems.com.

4.4.1 Fresh Air Calibration

This procedure determines the zero point of the sensor calibration curve. To perform a fresh air calibration, use the calibration adapter to connect the MiniR E 2000 to a "fresh" air source such as from a cylinder or Tedlar bag (option accessory). The "fresh" air is clean dry air without any organic impurities. If such an air cylinder is not available, any clean ambient air without detectable contaminant or a charcoal filter can be used.

1. The first sub-menu shows: "Fresh air Cal?"
2. Make sure that the MiniRAE 2000 is connected to one of the "fresh" air sources described above.
3. Press the **[Y/+]** key, the display shows "zero in progress" followed by "wait.." and a countdown timer.

After about 15 seconds pause, the display will show the message "update data…zeroed… reading = X.X ppm…" Press any key or wait about 20 seconds, the monitor will return back to "Fresh air Calibration?" submenu.

4.4.2 Span Calibration

This procedure determines the second point of the sensor calibration curve for the sensor. A cylinder of standard reference gas (span gas) fitted with a 500 cc/min. flow-limiting regulator or a flow-matching regulator is the simplest way to perform this procedure. Choose the 500 cc/min. regulator only if the flow rate matches or slightly exceeds the flow rate of the instrument pump. Alternatively, the span gas can first be filled into a Tedlar Bag, or delivered through a demand-flow regulator. Connect the calibration adapter to the inlet port of the MiniRAE 2000 Monitor, and connect the tubing to the regulator or Tedlar bag.

Another alternative is to use a regulator with >500 cc/min flow but allow the excess flow to escape through a T or an open tube. In the latter method, the span gas flows out through an open tube slightly wider than the probe, and the probe is inserted into the calibration tube.

Before executing a span calibration, make sure the span value has been set correctly (see next sub-menu).

1. Make sure the monitor is connected to one of the span gas sources described above.
2. Press the **[Y/+]** key at the "Span Cal?" to start the calibration. The display shows the gas name and the span value of the corresponding gas.
3. The display shows "Apply gas now!" Turn on the valve of the span gas supply.

4. Display shows "wait.... 30" with a count down timer showing the number of remaining seconds while the monitor performs the calibration.
5. To abort the calibration, press any key during the count down. The display shows "Aborted!" and return to "Span Cal?" sub-menu.
6. When the count down timer reaches 0, the display shows the calibrated value.

   Note: The reading should be very close to the span gas value.
7. During calibration, the monitor waits for an increased signal before starting the countdown timer. If a minimal response is not obtained after 35 seconds, the monitor displays "No Gas!" Check the span gas valve is on and for lamp or sensor failure before trying again.
8. The calibration can be started manually by pressing any key while the "Apply gas now!" is displayed.
9. After a span calibration is completed, the display will show the message "Update Data Span Cal Done! Turn Off Gas."
10. Turn off the flow of gas. Disconnect the calibration adapter or Tedlar bag from the MiniRAE 2000 Monitor.
11. Press any key and it returns back to "Span Gas Cal?"

4.4.3 Select Cal Memory

This function allows the user to select one of eight different memories for gas calibration and measurement. For Memories #1-7, the calibration and measurement gas is the same and no correction factor is applied. For Memory #0, the calibration gas is always isobutylene and the measurement gas may be different, in which case the correction factor for that gas is automatically applied. The default gas selections are listed in Section 4.4

1. "Select Cal Memory?" is the third sub-menu item in the Calibration sub-menu. Pressing the **[Y/+]** key, the display will show "Gas =" gas name followed by "Mem # x?"
2. Press **[N/-]** to scroll through all the memory numbers and the gas selections respectively. Press **[Y/+]** to accept the displayed Cal Memory number.
3. After the **[Y/+]** key is pressed, the display shows "Save?" Press **[Y/+]** key to save and proceed. Press **[N/-]** to discard the entry and advance to the next sub-menu.
4. If the gas in a newly selected Cal Memory number is not calibrated, the display shows "CF= x.xx". A correction factor with the value "x.xx" will be applied.
5. If the gas of a newly selected cal memory number has been calibrated previously, the display shows "Last calibrated xx/xx/xx".

4.4.4 Change Span Value

This function allows the user to change the span values of the calibration gases.

1. "Change Span Value?" is the fourth sub-menu item in the Calibration sub-menu
2. Press **[Y/+]**, display shows the gas name and the span value. A cursor will blink at the first digit of the Span value. To modify the span gas value, go to Step 3. Otherwise, press and hold the **[MODE]** key for 1 second to accept the previously stored span gas value and move to the next sub-menu.
3. Starting from the left-most digit of the span gas value, use the **[Y/+]** or **[N/-]** key to change the digit value and press **[MODE]** key momentarily to advance to next digit. Repeat this process until all digits are entered. Press and hold the **[MODE]** for 1 second to exit.
4. The display shows "Save?" To accept the new value, press the **[Y/+]** key. Press the **[N/-]** key or the **[MODE]** key to discard the change and move to the next sub-menu.

4.4.5 Modify Cal Memory

If the current cal memory number selected is not memory 0, users will be prompted whether to modify the settings of the selected cal memory. Press **[Y/+]** to modify the cal memory and **[N/-]** to go to the next sub-menu.

Once **[Y/+]** is pressed the LCD display will show the current memory number, current Gas selected and prompt user for acceptance of current gas selected.

1. Press **[N/-]** to modify the gas selection if desired. Or press **[Y/+]** key to skip the change of gas selection, and proceed to the next sub-menu.
2. After pressing **[N/-]**, display shows "Copy gas from library?" Press **[Y/+]** to accept or **[N/-]** for the next sub-menu, "Enter Custom gas?"
3. In the "Copy gas from library" submenu, use **[Y/+]** and **[N/-]** keys to scroll through the selections in the library. Press **[MODE]** key momentarily to select the gas. The display shows "Save?" Press **[Y/+]** to save or **[N/-]** to discard the changes and proceed to next sub-menu.
4. In the Custom gas sub-menu, the user can enter the gas name. Press the **[Y/+]** or **[N/-]** key to cycle through all 26 letters and 10 numerals. Press the **[MODE]** key momentarily to advance to the next digit. The flashing digit will move to the next digit to the right. Repeat this process until all digits (up to 8 digits) of the custom gas name is entered.

Press and hold the **[MODE]** key for 1 second to exit the name entry mode. The display will show "Save?" Press **[Y/+]** to save the entry, or **[N/-]** to discard the changes.

4.4.6 Change Correction Factor

This function allows the user to change the Correction Factor of the standard calibration gas (only for Cal Memory #0).

1. "Change Correction Factor?" is the sixth sub-menu in the Calibration sub-menu.
2. Press **[Y/+]** key. Display shows the gas name, then the correction factor.

   A cursor blinks at the left-most digit of the correction factor. If user wants to modify the correction factor, go to Step 3. Otherwise, press and hold the **[MODE]** key for 1 second to accept the previously stored correction factor value and return to the first sub-menu of the calibrate/select gas menu.
3. Starting from the left-most digit of the correction factor, use **[Y/+]** or **[N/-]** key to change the digit value and press **[MODE]** key momentarily to advance to the next digit, the cursor will move to the next digit to the right. Repeat this process until all digits are entered. Press and hold the **[MODE]** for 1 second to exit.
4. The display shows "Save?" To confirm the new value, press **[Y/+]** to accept the change. Press **[N/-]** or **[MODE]** to discard the change and return to the first sub-menu, Calibrate and Select Gas.

4.5 Change Alarm Limits

In this menu, the user can change the high and low alarm limits, the STEL limit and the TWA limit (see Table 4.5 below). Press the **[Y/+]** key and the display shows the current gas selected followed by the first sub-menu item below.

Table 4.5

Alarm Limit Sub-Menu
Change High Alarm limit?
Change Low Alarm limit?
Change STEL limit?
Change TWA limit?

1. Scroll through the Alarm Limit sub-menu using the **[N/-]** key until the display shows the desired limit to be changed, e.g.,"High limit?", "STEL limit?", etc.

2. Press the **[Y/+]** key to select the desired limit and the display shows a flashing cursor on the left-most digit of the previously stored alarm limit.

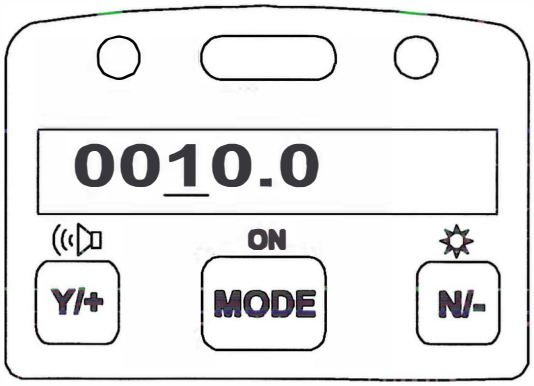

3. To modify this limit value, use the **[Y/+]** or **[N/-]** key to change the digit value and press the **[MODE]** key momentarily to advance to the next digit. The flashing digit will move to the next digit to its right. Repeat this process until the new limit value is entered. Press and hold the **[MODE]** key for 1 second to exit data entry mode.

4. If there is any change to the existing value, the display shows "Save?" Press **[Y/+]** to accept the new value and move to the next sub-menu. Press **[N/-]** to discard the changes and move to the next sub-menu.

4.5.1 Change Low Alarm Limit

The second sub-menu item in the Alarm Limit sub-menu allows the user to change the Low Alarm limit. The LCD displays "Low limit?" To change Low Alarm limit, press **[Y/+]** key, or Press **[N/-]** key advance to next sub-menu in Table 4.5.

1. Press **[Y/+]** and the display will show a flashing cursor on the left-most digit of the previously stored Low alarm limit.
2. To modify this limit value, use the **[Y/+]** or **[N/-]** key to change the digit value and press the **[MODE]** key momentarily to advance to the next digit. The flashing digit will move to the next digit to its right. Repeat this process until the new limit values is entered. Press and hold the **[MODE]** key for 1 second to exit data entry mode.
3. If there is any change to the existing value, the display shows "Save?" Press **[Y/+]** to accept the new value and move to the next sub-menu. Press **[N/-]** to discard the changes and move to the next sub-menu.

4.5.2 Change STEL Limit

This sub-menu item allows the user to change the STEL limit. The display shows "STEL limit?"

1. Press the **[Y/+]** key and the display will show a flashing cursor on the left-most digit of the previously stored STEL limit.
2. To modify this limit value, use the **[Y/+]** or **[N/-]** key to change the digit value and press the **[MODE]** key momentarily to advance to the next digit. The flashing digit will move on to next digit to its right. Repeat this process until the new limit values is entered. Press and hold the **[MODE]** key for 1 second to exit data entry mode.
3. If there is any change to the existing value, the display shows "Save?" Press **[Y/+]** to accept the new value and move to the next sub-menu. Press **[N/-]** to discard the changes and move to the next sub-menu.

4.5.3 Change TWA Limit

This sub-menu item allows the user to change the TWA limit. The LCD displays "TWA limit?"

1. Press **[Y/+]** and the display will show a flashing cursor on the left-most digit of the previously stored TWA limit.
2. To modify this limit value, use the **[Y/+]** or **[N/-]** key to change the digit value and press the **[MODE]** key momentarily to advance to the next digit. The flashing digit will move on to next digit to its right. Repeat this process until the new limit values is entered. Press and hold the **[MODE]** key for 1 second to exit data entry mode.
3. If there is any change to the existing value, the display shows "Save?" Press **[Y/+]** to accept the new value and move to the next sub-menu. Press **[N/-]** to discard the changes and move to the next sub-menu.

4.6 Change Datalog

The MiniRAE 2000 monitor calculates and stores the concentration and ID of each sample taken. In the datalog sub-menu, a user can perform the tasks and functions shown below.

Datalog Sub-Menu

Reset Peak/Minimum?

Clear Data?

Change Data Period?

Change Average Type?

4.6.1 Reset Peak

This function will reset the peak and minimum stored in the data memory. Note: this function will not clear the STEL or TWA data.

1. "Reset Peak?" is the first sub-menu item in the Datalog sub-menu (Table 4.6).
2. Press the **[Y/+]** key to reset the Peak/Minimum Values. The display shows "Are You Sure?"
3. Pressing the **[Y/+]** key again will reset the values. The display shows "Peak/Minimum Cleared" and moves to the next submenu.
4. Press the **[N/-]** or **[MODE]** key to exit without resetting the values and move to the next sub-menu.

4.6.2 Clear Data

This function will erase all data stored in the non-volatile datalog memory. Note: This function does not change STEL, TWA, Peak, Minimum and run time values, which are stored in the regular data memory.

1. "Clear Data?" is the third sub-menu item in the Datalog sub-menu.
2. Press the **[Y/+]** key to clear the datalog memory. The display shows "Are you sure?"
3. Press the **[Y/+]** key again to confirm erasure of all the datalog memory.
4. Press the **[N/-]** or **[MODE]** key to exit without clearing the datalog memory and move to the next datalog sub-menu.

4.6.3 Change Data Period

The datalog period can be programmed from 1 to 3,600 seconds (1 hour).

1. "Change Data Period?" is the fifth sub-menu item in the Datalog sub-menu.
2. Press the **[Y/+]** key and the display shows "Datalog Period = XXXX" with the left-most digit flashing, where "XXXX" is the previously stored data log period.
4. To modify this period, starting from the left-most digit, use the **[Y/+]** or **[N/-]** key to change the digit value and press the **[MODE]** key momentarily to advance to the next digit. The flashing digit will move to the next digit to the right. Repeat this process until all 4 digits of the new period are entered. Press and hold the **[MODE]** key for 1 second to exit data entry mode.
5. If there is any change to the existing value, the display will show "Save?" Press **[Y/+]** to accept the new value or **[N/-]** to discard the changes and move to the next sub-menu.

4.6.4 Change Average Type

The user can select either an 8-hour Time Weighted Average (TWA) or a running Average. The running average is simply the average of all instantaneous (1-second) readings since the measurement was started. This average may increase or decrease with time depending on the readings. The TWA is a cumulative value used to estimate the fraction of the 8-hour limit to which the user has been exposed since the start of the measurement. This value can only increase or remain constant, never decrease. Refer to Technical Note 119 for more information on how TWA is calculated.

1. "Change Average Type?" is the sixth sub-menu in the Datalog sub-menu.
2. Press the **[Y/+]** key to enter the function.
3. The display will show "Run ing Average?" or " Time Weighted Average?" depending on the current average type.
4. Press **[N/-]** key to toggle between the average types. Press **[Y/+]** key to select the displayed average type.
5. If there is any change to the existing setting, the display shows "Save?" Press **[Y/+]** to save the change. Press **[N/-]** or **[MODE]** to discard the change and return to the first sub-menu.

4.7 Change Monitor Setup

Several monitor specific variables can be changed in this menu. The following is a list of configuration data that can be modified by the user.

Monitor Setup Sub-Menu	Diagnostic Mode
Change Operation Mode?	"
Change Site ID?	Change Unit ID?
Change User ID?	Change Host ID?
Change Alarm Mode?	"
Change User Mode?	"
Change Date?	"
Change Time?	"
Change Lamp?	"
Change Pump Duty Cycle?	"
Change Unit?	"
Change Dilution Ratio?	"
Change Output?	"
Change DAC Range?	"
Set Temperature Unit?	"

4.7.1 Change Operation Mode

MiniRAE 2000 supports two operation modes: Survey and Hygiene mode.

Survey mode: Manual start/stop of measurements and display of certain exposure values.

Hygiene mode: Automatic measurements, running and datalogging continuously and calculates additional exposure values.

1. "Change Op Mode?" is the first sub-menu item in the Monitor Setup menu (Table 4.7).
2. Press the **[Y/+]** key and the display shows the current user mode: "Op Mode = *current mode*?"
3. Press the **[Y/+]** key to accept the currently displayed operation (Op) mode. Press **[N/-]** to toggle to the other operation mode. Press **[MODE]** to exit this sub-menu and move to the next monitor setup sub-menu.
4. When changing Op mode from Hygiene to Survey, the display shows the additional message "Warning! Exit Hygiene?" to prevent accidental exit from Hygiene mode. Press the **[Y/+]** key to acknowledge.
5. If there is any change to the existing setting, the display will show "Save?" Press the **[Y/+]** key to accept or the **[N/-]** key to discard and move to the next sub-menu.

Note: If a new Op Mode is saved, the display shows "Op Mode changed!!" when exiting the programming mode.

4.7.2 Change Site ID

The user can enter an 8-digit alphanumeric site ID in the programming mode. This site ID will be included in the datalog report.

1. "Change Site ID?" is the second sub-menu item in the Monitor Setup menu (Table 4.7).
2. Press the **[Y/+]** key and the display shows the current site ID: "Site ID = xxxxxxx" with the left most digit flashing.
3. Press the **[Y/+]** or **[N/-]** key to cycle through all 26 letters and 10 numerals. Press **[MODE]** momentarily to advance to the next digit. The flashing digit will move to the next digit to the right. Repeat this process until all 8 digits of the new site ID are entered.
4. Press and hold the **[MODE]** key for 1 second to exit the data entry mode.
5. If there is any change to the existing site ID, the display shows "Save?" Press the **[Y/+]** key to accept the new site ID. Press the **[N/-]** key to discard the change and move to the next sub-menu.

4.7.3 Change User ID

The user can enter an 8-digit alphanumeric user ID in the programming mode. This user ID will be included in the datalog report.

1. "Change User ID?" is the third sub-menu item the Monitor Setup menu.
2. Press the **[Y/+]** key and the display shows the current user ID: "User ID = xxxxxxxx" with the left most digit flashing.
3. Press the **[Y/+]** or **[N/-]** key to cycle through all 26 letters and 10 numerals. Press **[MODE]** momentarily to advance to the next digit. The flashing digit will move to the next digit to the right. Repeat this process until all 8 digits of the new user ID are entered.
4. Press and hold the **[MODE]** key for 1 second to exit the data entry mode.
5. If there is any change to the existing user ID, the display shows "Save?" Press the **[Y/+]** key to accept the new user ID. Or press the **[N/-]** key to discard the changes and move to the next sub-menu.

4.7.4 Change Alarm Mode?

There are two different alarm modes: **Latched** and **Automatic Reset** (Auto Reset) in the MiniRAE 2000 that can be selected from the programming menu.

1. "Change Alarm Mode?" is the fourth sub-menu item in the Monitor Setup menu.
2. Press the **[Y/+]** key; the display shows the current alarm mode.
3. Press the **[Y/+]** key to accept the currently displayed alarm mode. Press **[N/-]** key to toggle to the other alarm mode. Press **[MODE]** to exit this sub-menu and move to the next monitor setup sub-menu.
4. If there is any change to the existing setting, the display will show "Save?" Press **[Y/+]** to save the change. Press **[N/-]** or **[MODE]** to discard the change and move to the next sub-menu.

4.7.5 Change User Mode

There are two different user modes: **Display** and **Program** that can be selected from the programming menu.

1. "Change User Mode?" is the fifth sub-menu item in the Monitor Setup menu (Table 4.7).
2. Press the **[Y/+]** key; the display shows the current user mode selected.
3. Press the **[Y/+]** key to accept the currently displayed user mode. Press **[N/-]** key to toggle to the alternate user modes. Press **[MODE]** to exit this sub-menu and move to the next monitor setup sub-menu.
4. If there is any change to the existing selection, the display shows messages "Program change" and "Are you sure?" Press **[Y/+]** to confirm the change or press **[N/-]** or **[MODE]** to discard the changes and move to the next sub-menu.

CAUTION: If the user mode is changed to **Display** mode, the user can no longer enter the programming mode. Therefore, the user can not change the user mode back to **Program** mode in normal mode.

To restore the user mode back to **Program** mode, turn the unit off and back on in Diagnostic Mode. Next enter Program mode by holding the **[MODE] and [N/-]** keys for three seconds. Enter the password at the prompt (the default is 0000). Once program mode is entered, go to the "Change Monitor Setup" / "Change User Mode" and change the mode back to **Program.**

An alternative way to change Display mode back to Program mode is through the PC and the ProRAE-Suite software.

4.7.6 Change Date

The MiniRAE 2000 monitor is equipped with a real time clock (RTC). The user can enter the correct date and time (see 4.7.7) for the real time clock.

1. "Change Date?" is the sixth sub-menu item in the Monitor Setup menu.
2. Press **[Y/+]** and the display shows the current date "mm / dd / yy" with the left most digit of the date flashing.
5. To modify this value, use the **[Y/+]** or **[N/-]** key to change the digit value and press the **[MODE]** key momentarily to advance to the next digit. The flashing digit will move on to next digit to its right. Repeat this process until the new date and time values are entered. Press and hold the **[MODE]** key for 1 second to exit data entry mode.
4. If there is any change to the existing value, the display shows "Save?" Press **[Y/+]** to confirm the new value or press **[N/-]** or **[MODE]** to discard the changes and move to the next sub-menu.

4.7.7 Change Time

To change the time in the RTC of the MiniRAE 2000:

1. "Change Time?" is the seventh sub-menu item in the Monitor Setup menu.
2. Press **[Y/+]** and the display shows the current time in the 24-hour format "hh : mm" with the left most digit of the time flashing.
3. To modify this value, use the **[Y/+]** or **[N/-]** key to change the digit value and press the **[MODE]** key momentarily to advance to the next digit. The flashing digit will move on to next digit to its right. Repeat this process until the new date and time values are entered. Press and hold the **[MODE]** key for 1 second to exit data entry mode.
4. If there is any change to the existing value, the display shows "Save?" Press **[Y/+]** to confirm the new value or press **[N/-]** or **[MODE]** to discard the changes and move to the next sub-menu.

4.7.8 Change Lamp

There are three UV lamps with different photon energies available for the PID sensor: **9.8 eV, 10.6 eV** and **11.7 eV**. The user can select any one of the lamps from the programming mode.

1. "Change Lamp Type?" is the eighth sub-menu item in the Monitor Setup menu (Table 4.7).
2. Press the **[Y/+]** key; the display shows the current PID lamp selection.
3. Press the **[Y/+]** key to accept the currently displayed lamp. Press **[N/-]** key to scroll through the sub-menu for other lamp selections. Press **[MODE]** to exit this sub-menu and return to the next sub-menu in Table 4.7.
4. If there is any change to the existing selection, the display will show "Save?" Press **[Y/+]** to save the new selection or press **[N/-]** or **[MODE]** to discard the change and return to the next sub-menu in Table 4.7.

4.7.9 Change Unit

User can change the display and datalog unit from parts per million (ppm) to milli-gram per cubic meter (mg/m^3).

1. "Change Unit?" is the ninth sub-menu item in the Monitor Setup sub-menu.
2. Press the **[Y/+]** key, the display should show the current unit "Display Unit = ppm?" or "Display Unit = mg?"
3. Press **[Y/+]** key to accept the currently displayed unit. Press **[N/-]** key to toggle to the other unit. Press **[MODE]** key to exit this sub-menu.
4. If there is any change to the existing selection, press **[Y/+]** to confirm the new selection or press **[N/-]** or **[MODE]** to discard the changes and move to the next sub-menu.

Caution:

1. **The correction factor in the gas library is calculated based on "ppm" unit. If "mg" unit is selected, the built-in correction factor library is not valid.**
2. **No automatic conversion between "ppm" and "mg/m^3" reading is performed by the monitor.**
3. **When the unit name is changed from "ppm" to "mg", the unit must be recalibrated with the span gas concentration entered in mg/m^3. The converse rule applies when the unit is changed from "mg" to "ppm".**

4.7.10 Change Dilution Ratio

If a dilution system is used upstream of the MiniRAE 2000 inlet port, the user can enter the dilution ratio (from 1 to 10) to compensate the readings. The unit will then display the actual concentration of the gas before dilution. The dilution ratio should be 1 in normal operation where no dilution gas is applied to the sample gas. Dilution improves accuracy and linearity when the concentrations are above a few thousand ppm.

1. "Change Dilution Ratio?" is the tenth sub-menu item in the Monitor Setup menu.
2. Press the **[Y/+]** key; the display shows the current dilution ratio: "Dilution Ratio = xx" with the left most digit flashing.
3. Press the **[Y/+]** or **[N/-]** key to increase or decrease the value of the digit. Press **[MODE]** momentarily to advance to the next digit. The flashing digit will move to the next digit to the right. Repeat this process until both digits of the new dilution ratio are entered.
4. Press and hold the **[MODE]** key for 1 second to exit the data entry mode and move to the next sub-menu.
5. If there is any change to the existing dilution ratio, the display shows "Save?" Press **[Y/+]** to confirm the new value or press **[N/-]** or **[MODE]** to discard the changes and move to the next sub-menu.

4.7.11 Change Output?

There are two different external output options: DAC (Analog output) and Alarm in the MiniRAE 2000 that can be selected from the programming menu. The alarm output can be used to connect to the optional vibration alarm (vibrator) only. The analog output, which is proportional to the gas concentration, can be connected a chart recorder or can be queried by a computer to download data in real time (see Technical Note 141).

1. "Change External Output?" is the eleventh sub-menu item in the Monitor Setup menu.
2. Press the **[Y/+]** key and the display shows the current output option selection: "Output = DAC?"
3. Press the **[Y/+]** key to accept the currently displayed output option. Press **[N/-]** to change to the other external option: "Output = Alarm?" Press **[MODE]** to exit this sub-menu and move to the next monitor setup sub-menu.
4. If there is any change to the existing selection the display will show "Save?" Then, press **[Y/+]** to save the change, press **[N/-]** to go back to Step 2, or press **[MODE]** to exit this sub-menu and move to the next monitor setup sub-menu.

4.7.12 Change DAC Range?

There are four different DAC (Digital-to-Analog Conversion) range values available in the **MiniRAE 2000: 20, 200, 2000** and **10K ppm**. The maximum 2.5V DC analog signal output from the unit will represent the range value chosen. (See for analog signal output connection.)

1. "Change DAC Range?" is the twelfth sub-menu item in the Monitor Setup menu.
2. Press the **[Y/+]** key, the display shows the current DAC Range value: "DAC Range = 2000 ppm?"
3. Press the **[Y/+]** key to accept the currently displayed value. Press **[N/-]** to scroll through the sub-menu for other range values. Press **[MODE]** to exit this sub-menu and return to the first sub-menu in Table 4.7.
4. If there is any change to the existing selection, press the **[Y/+]** key and the display will show "Save?" Press the **[Y/+]** key to save the change or press the **[N/-]** key to discard and return to the first sub-menu in Table 4.7.

4.7.13 Set Temperature Unit?

The temperature display can be switched between Fahrenheit and Celsius units.

1. "Set Temperature Unit?" is the thirteenth sub-menu item in the Monitor Setup menu.
2. Press the **[Y/+]** key, and the display shows the current setting: "Temperature Unit = Fahrenheit?"
3. Press the **[Y/+]** key to accept the currently displayed value. Press **[N/-]** to select the sub-menu "Temperature Unit = Celsius?" Press **[MODE]** to exit this sub-menu and return to the first sub-menu in Table 4.7.
4. If there is any change to the existing selection, press the **[Y/+]** key and the display will show "Save?" Press the **[Y/+]** key to save the change and return to the first sub-menu in Table 4.7 or press the **[N/-]** key to discard and return to Step 3..

4.8 Exit Programming Mode

1. To exit programming mode from the first tier menu level, press the **[MODE]** key once.
2. To exit programming mode from 2nd tier sub-menu, press the **[MODE]** key twice.
3. To return to programming mode, press and hold down both the **[MODE]** and **[N/-]** keys for 3 seconds.

5. THEORY OF OPERATION

The MiniRAE 2000 monitor uses a newly developed electrodeless discharge UV lamp as the high-energy photon source for the PID. As organic vapors pass by the lamp, they are photo-ionized and the ejected electrons are detected as a current. The PID sensor with a standard 10.6 eV lamp detects a broad range of organic vapors. A lamp with high photon energy (e.g. 11.7 eV) will measure the more kinds of compounds, whereas low photon energies (e.g. 9.8 eV) are selective for easily ionizable compounds such as aromatics. In principle, any compound with an ionization energy lower than that of the lamp photons can be measured.

The PID sensor for the MiniRAE 2000 monitor is constructed as a small cavity in front of the UV lamp. A diaphragm pump draws the gas sample into the sensor and then pumps it out through the side of the instrument.

Figure 5-1 MiniRAE 2000 Block Diagram

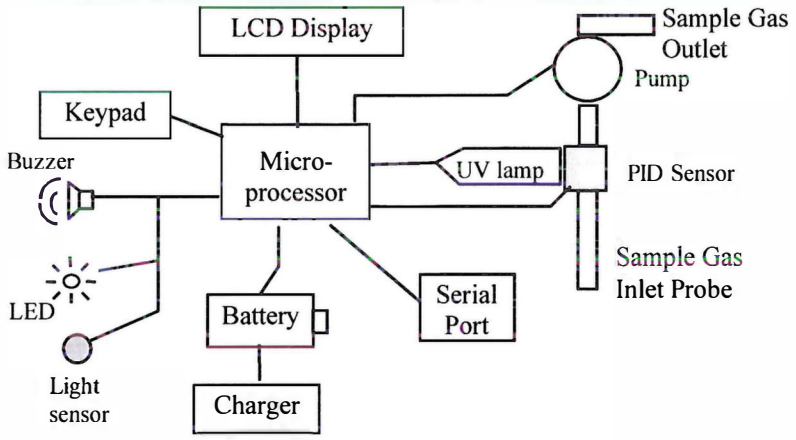

A single chip microcomputer is used to control the operation of the alarm buzzer, LED, pump and light sensor. It measures the sensor readings and calculates the gas concentrations based on calibration to known standard gases. The data are stored in non-volatile memory so that they can be sent to a PC for record keeping. RS-232 transceivers provide a serial interface between the monitor and the serial port of a PC. An LCD display consisting of a single row of eight alpha/numeric characters is used to display the readings. The user interacts with the monitor through three keys on the front panel keypad.

A rechargeable NiMH, NiCd battery, or an alkaline battery pack powers the monitor.

6. MAINTENANCE

The major maintenance items of the MiniRAE 2000 are:

- Battery pack
- Sensor module
- PID lamp
- Sampling pump
- Inlet connectors and filters

Note: Maintenance should be performed by qualified personnel only.

NOTE: The printed circuit board of the monitor is connected to the battery pack even if the power is turned off. Therefore, it is very important to disconnect the battery pack before servicing or replacing any components inside the monitor. Severe damage to the printed circuit board or battery may occur if the battery pack is not disconnected before servicing the unit.

6.1 Battery Charging and Replacement

When the display shows a flashing message "Bat", the battery requires recharging (see Section 3.1 for Battery charging). It is recommended to recharge the MiniRAE 2000 monitor upon returning from fieldwork. A fully charged battery runs a MiniRAE 2000 monitor for 10 hours continuously. The charging time is less than 10 hours for a fully discharged battery. The built-in charging circuit is controlled by the micro-controller to prevent over-charging. The battery may be replaced in the field (in area known to be non-hazardous) if required.

WARNING

To reduce the risk of ignition of hazardous atmospheres, recharge battery only in area known to be non- hazardous. Remove and replace battery only in area known to be non-hazardous.

Replacing Battery Pack

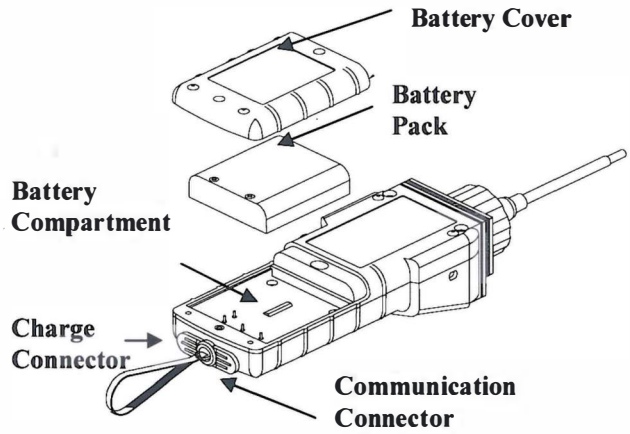

Figure 6-1 Battery Replacement

1.

Turn off the power of the MiniRAE 2000.

2. Unscrew the two battery compartment screws, located on the bottom of the monitor, and remove the cover.
3. Remove the battery pack from the battery compartment.
4. Replace a fully charged spare battery pack inside the battery compartment. Make sure the battery pack is oriented properly inside the compartment
5. Close the battery cover and tighten the two screws.

Replacing Alkaline Battery Adapter

1. Insert four fresh AA size alkaline batteries into the alkaline battery holder. Make sure that the polarity of the batteries is correct.
2. Follow the same procedure as described above to replace the battery holder.

Note: The internal charging circuit is designed to prevent charging to alkaline batteries.

6.2 PID Sensor & Lamp Cleaning/Replacement

The sensor module is made of several components and is attached to the lamp-housing unit as shown in Figure 7-2.

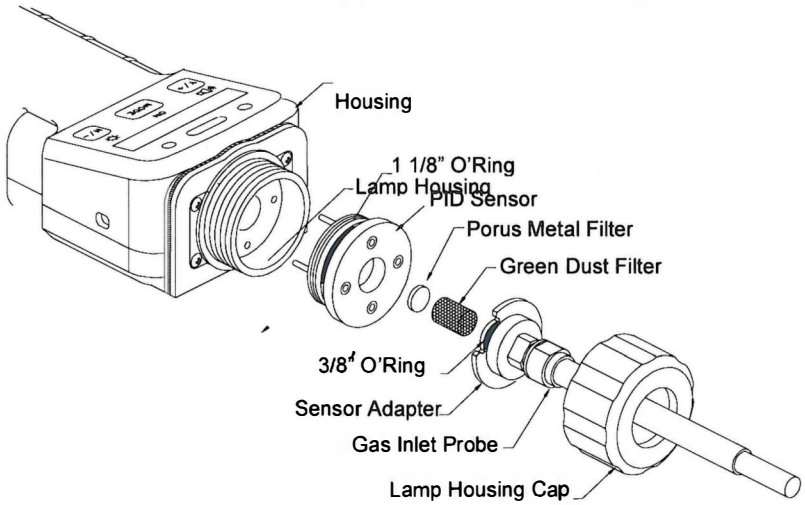

Figure 7-2 Sensor Components

Note: Normally the cleaning procedure is not needed. Clean the PID sensor module, the lamp and the lamp housing only when one of the following happened:

1. The reading is inaccurate even after calibration.
2. The reading is very sensitive to air moisture.
3. A chemical liquid has been sucked into the unit and damaged the unit.

Use of the water trap filter will help prevent contamination and accidentally drawing liquid into the sensor.

To access the sensor components and lamp, gently unscrew the lamp-housing cap, remove the sensor adapter with the gas inlet probe and the metal filter all together. Then hold the PID sensor and pull straight out to avoid bending the electrical pins on the sensor (see Figure 7-2). A slight, gentle rocking motion helps release the sensor.

To clean the PID sensor:

Place the entire PID sensor module into GC grade methanol. It is highly recommended that an ultrasound bath to be used to clean the sensor for at least 15 minutes. Then dry the sensor thoroughly. Never touch the electrodes of the sensor by hand.

Also use a methanol-soaked cotton swab to wipe off the lamp housing where it contacts the sensor when the sensor is installed.

Turn over the sensor so that the pins point up and the sensor cavity is visible. Examine the sensor electrodes for any corrosion, damage, or bending out of alignment. The metal sensor electrode "fingers" should be flat and straight. If necessary, carefully bend the sensor fingers to ensure that they do not touch the Teflon portions and that they are parallel to each other. Make sure that the nuts on the sensor pins are snug but not overtight. If the sensor is corroded or otherwise damaged, it should be replaced.

To clean lamp housing or change the lamp:

To clean lamp housing or change the lamp:

If the lamp does not turn on, the monitor will display an error message to indicate replacement of the lamp may be required.

1. If the lamp is operational, clean the lamp window surface and the lamp housing by wiping it with GC grade methanol using a cotton swab using moderate pressure. After cleaning, hold the lamp up to the light at an angle to detect any remaining film. Repeat the process until the lamp window is clean. Never use water solutions to clean the lamp. Dry the lamp and the lamp housing thoroughly after cleaning.

   CAUTION: Never touch the window surface with the fingers or anything else that may leave a film. Never use acetone or aqueous solutions.

2. If the lamp does not turn on, remove the lamp from the lamp housing. Place the lamp O-ring onto the new lamp. Insert the new lamp, avoiding contact with the flat window surface.
3. Reinstall the PID sensor module.
4. Tighten the Lamp Housing Cap.
5. If the lamp type has been changed, adjust the lamp type setting in the programming mode (Section 4.7.8).

6.3 Sampling Pump

When approaching the end of the specified lifetime of the pump, it will consume higher amount of energy and reduce its sample draw capability significantly. When this occurs, it is necessary to replace or rebuild the pump. When checking the pump flow, make sure that the inlet connector is tight and the inlet tubing is in good condition. Connect a flow meter to the gas inlet probe. The flow rate should be above 450 cc/min when there is no air leakage.

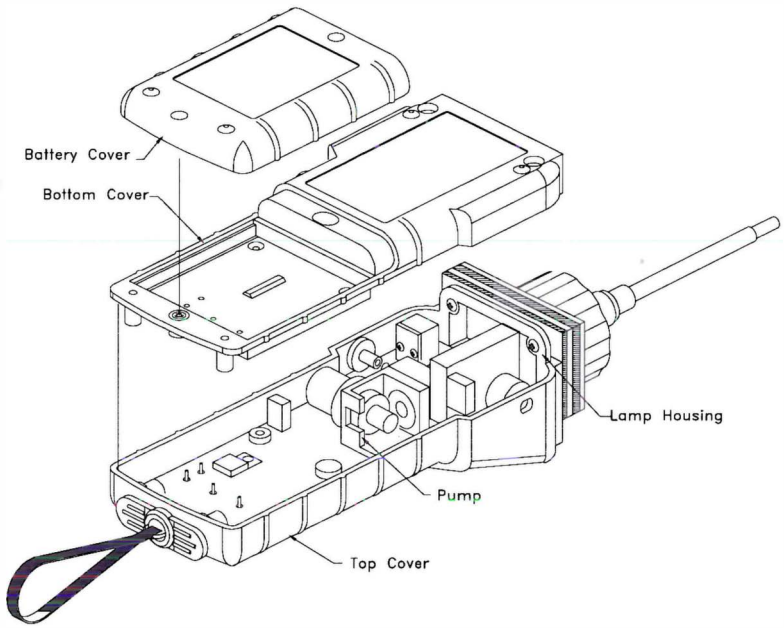

Figure 7-3 Sampling Pump

Pump Replacement

1. Turn off the MiniRAE 2000 power.
2. Open the battery cover, remove the battery pack, and carefully unscrew the six screws to open the bottom cover.
3. Unplug the pump from the PCB. Unscrew the two screws that hold the pump assembly to the PCB. Disconnect the Tygon tubing that connects the pump to the gas inlet port and gas outlet port.
4. Insert a new pump assembly. Connect the Tygon tubing to the gas inlet port. Plug the pump connector back into the PCB and screw down the pump assembly to the board.
5. Replace the bottom cover and tighten the six screws. Reconnect the battery pack. Replace the battery pack and its cover.

6.4 Turning on the UV Lamp

The UV lamp is made of a glass envelope and a UV window (salt crystal) on one end of the envelope. The inside of the lamp is filled with low pressure gases. To turn on the lamp, a high voltage electric field is applied from the outside of the glass envelope. The molecules inside the lamp are ionized and produce a glow discharge that generates the UV light. The MiniRAE 2000 has a built-in sensing mechanism to monitor the status of the UV lamp and display a "Lamp" error message if it is not on.

If the UV lamp has not been used for a long period of time (> 1 month) or is cold, it may become slightly harder to turn on. If such a condition occurs, the "Lamp" message will appear in the monitor display during the power on sequence. This phenomenon is more significant in 0.25" UV lamps used in ToxiRAE and MultiRAE Plus products, because of the relatively small lamp size. To solve this problem, simply turn on and off the monitor a few times and the lamp should turn on. After the UV lamp is turned on for the first time, it should be easier to turn on the UV lamp next time.

It is possible that the UV lamp is actually on when the lamp error message appears. This is because when the lamp becomes old, the internal threshold level to detect lamp failure may have shifted and cause a false alarm. To eliminate such possibility, simply check to see the UV lamp is actually on. This can be done easily by removing the sensor cap and observing the glow light of the UV lamp in a dark place. The user can also feed the monitor with calibration gas and observe if the sensor reading changes. If the reading changes significantly with the gas, the UV lamp is actually on.

A possible failure mechanism for the UV lamp is a leak developed along the seal of the glass envelope. When such condition occurs, the lamp will become very hard or impossible to turn on and will need to be replaced.

7. TROUBLESHOOTING

To aid the user in diagnosing the monitor, a special diagnostic mode can be used displays critical, low level parameters. Section 7.1 describes the operation of the diagnostic mode. Section 7.2 summarizes the frequently encountered problems and suggested solutions. By turning on the MiniRAE 2000 monitor in diagnostic mode and by using the troubleshooting table in Section 7.2, the user can usually correct the problem without having to return the monitor for repair.

WARNING

This function should be used by qualified personnel only! The diagnostic mode allows the user to set several low-level parameters that are very critical to the operation of the monitor. Extra care should be taken when setting these parameters. If the user is not familiar with the function of these parameters and sets them incorrectly, it may cause the monitor to shut down or malfunction.

7.1 Troubleshooting Table

Problem	Possible Reasons & Solutions
Cannot turn on power after charging the battery	**Reasons:** Discharged battery. Defective battery. Microcomputer hang-up. **Solutions:** Charge or replace battery. Disconnect, then connect battery to reset computer.
No LCD back light	**Reasons:** Trigger level too low, the current mode is not user mode, and the mode does not support automatic turn on back light. **Solutions:** Adjust trigger level. Verify the back light can be turned on in user mode. Call authorized service center.
Lost password	**Solutions:** Call Technical Support at +1.408 .752 .0723 or +1. 888 .723 .4800
Reading abnormally High	**Reasons:** Dirty sensor module. Dirty water trap filter. Excessive moisture and water condensation. **Solutions:** Clean sensor module and lamp housing. Replace water trap filter. Blow dry the sensor module.
Buzzer Inoperative	**Reasons:** Bad buzzer. **Solutions:** Call authorized service center.

Inlet flow too low	**Reasons:**	Pump diaphragm damaged or has debris. Flow path leaks.
	Solutions:	Check flow path for leaks; sensor module O-ring, tube connectors, Teflon tube compression fitting. Replace pump or diaphragm.
"Lamp" message during operation	**Reasons:**	Lamp drive circuit. Weak or defective PID lamp, defective.
	Solutions:	Turn the unit off and back on Replace UV lamp
Full scale measurement in humid environment	**Reasons:**	Dirty or wet sensor.
	Solutions:	Clean and dry sensor and lamp housing. Adjust sensor fingers to ensure not touching Teflon. Use water trap filter.
Reading abnormally low	**Reasons:**	Incorrect calibration. Low sensitivity to the specific gas. Weak or dirty lamp. Air leakage.
	Solutions:	Calibrate the monitor. Replace sensor. Clean or replace lamp. Check air leakage.

APPENDIX A. QUICK REFERENCE GUIDE

Press [N/-] and [MODE], simultaneously, for 3 seconds, to enter Programming Mode. Press [MODE] to return to Survey Mode.

PROGRAMMING MODE

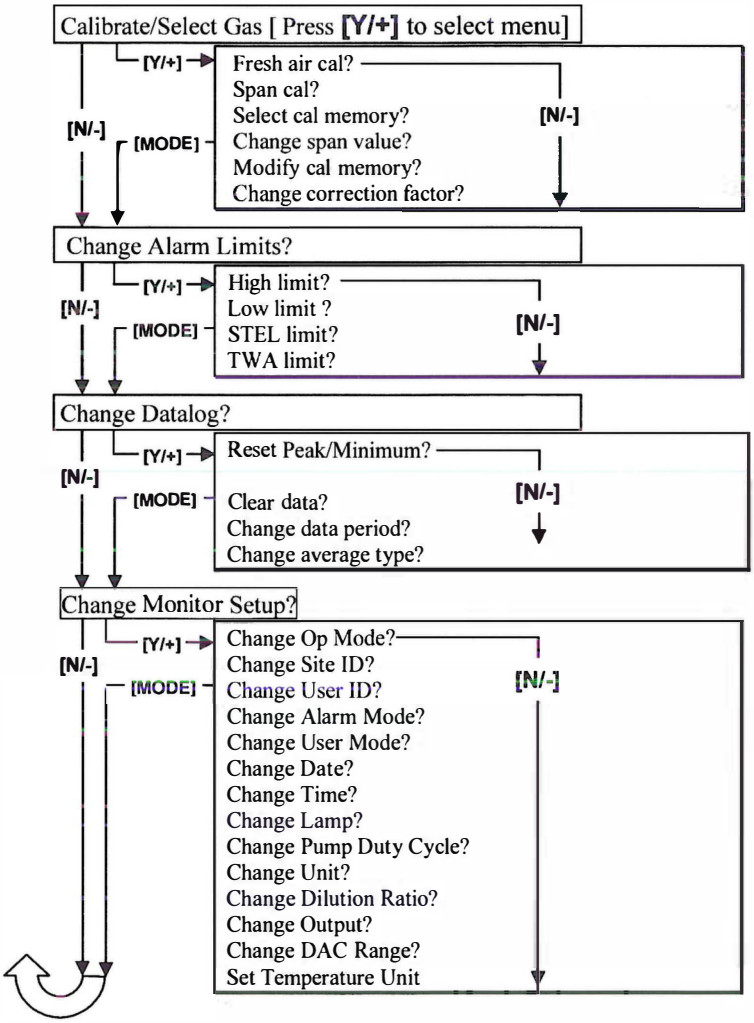

RAE Systems, Inc. Contact Information

Main Office:	3775 N. First St. San Jose, CA 95134-1708 USA
Telephone:	408-952-8200
Fax:	408-952-8480
Instrument Sales:	877-723-2878
Email:	RaeSales@raesystems.com
Website:	www.raesystems.com
Technical Service:	888-723-4800 Tech@raesystems.com

Special Note

If the monitor needs to be serviced, contact either:

1. The RAE Systems distributor from whom the monitor was purchased; they will return the monitor on your behalf.
2. The RAE Systems Technical Service Department. Before returning the monitor for service or repair, obtain a Returned Material Authorization (R A) number for proper tracking of your equipment. This number needs to be on all documentation and posted on the outside of the box in which the monitor is returned for service or upgrade. Packages without RMA Numbers will be refused at the factory.

STANDARD OPERATING PROCEDURE

Logging of Soil Borings

I. Purpose and Scope

This SOP provides guidance to obtain accurate and consistent descriptions of soil characteristics during soil-sampling operations. The characterization is based on visual examination and manual tests, not on laboratory determinations.

II. Equipment and Materials

- Indelible pens
- Tape measure or ruler
- Field logbook
- Spatula
- HCL, 10 percent solution
- Squirt bottle with water
- Rock- or soil-color chart (e.g., Munsell)
- Grain-size chart
- Hand lens
- Unified Soil Classification System (USCS) index charts and tables to help with soil classification (attached)

III. Procedures and Guidelines

This section covers several aspects of soil characterization: instructions for completing the CH2M HILL soil boring log Form D1586 (attached), field classification of soil, and standard penetration test procedures.

A. Instructions for Completing Soil Boring Logs

Soil boring logs will be completed in the field log books or on separate soil boring log sheets. Information collected will be consistent with that required for Form D1586 (attached), a standard CH2M HILL form (attached), or an equivalent form that supplies the same information.

The information collected in the field to perform the soil characterization is described below.

Field personnel should review completed logs for accuracy, clarity, and thoroughness of detail. Samples also should be checked to see that information is correctly recorded on both jar lids and labels and on the log sheets.

B. Heading Information

Boring/Well Number. Enter the boring/well number. A numbering system should be chosen that does not conflict with information recorded for previous exploratory work done at the site. Number the sheets consecutively for each boring.

Location. If station, coordinates, mileposts, or similar project layout information is available, indicate the position of the boring to that system using modifiers such as "approximate" or "estimated" as appropriate.

Elevation. Elevation will be determined at the conclusion of field activities through a survey.

Drilling Contractor. Enter the name of the drilling company and the city and state where the company is based.

Drilling Method and Equipment. Identify the bit size and type, drilling fluid (if used), and method of drilling (e.g., rotary, hollow-stem auger). Information on the drilling equipment (e.g., CME 55, Mobile B61) also is noted.

Water Level and Date. Enter the depth below ground surface to the apparent water level in the borehole. The information should be recorded as a comment. If free water is not encountered during drilling or cannot be detected because of the drilling method, this information should be noted. Record date and time of day (for tides, river stage) of each water level measurement.

Date of Start and Finish. Enter the dates the boring was begun and completed. Time of day should be added if several borings are performed on the same day.

Logger. Enter the first and last name.

C. Technical Data

Depth Below Surface. Use a depth scale that is appropriate for the sample spacing and for the complexity of subsurface conditions.

Sample Interval. Note the depth at the top and bottom of the sample interval.

Sample Type and Number. Enter the sample type and number. SS-1 = split spoon, first sample. Number samples consecutively regardless of type. Enter a sample number even if no material was recovered in the sampler.

Sample Recovery. Enter the length to the nearest 0.1-foot of soil sample recovered from the sampler. Often, there will be some wash or caved material above the sample; do not include the wash material in the measurement. Record soil recovery in feet.

Standard Penetration Test Results. In this column, enter the number of blows required for each 6 inches of sampler penetration and the "N" value, which is the sum of the blows in the middle two 6-inch penetration intervals. A typical standard penetration test involving successive blow counts of 2, 3, 4, and 5 is recorded as 2-3-4-5 and (7). The standard penetration test is terminated if the sampler encounters refusal. Refusal is a penetration of less than 6 inches with a blow count of 50. A

partial penetration of 50 blows for 4 inches is recorded as 50/4 inches. Penetration by the weight of the slide hammer only is recorded as "WOH."

Samples should be collected using a 140-pound hammer and 2-inch diameter split spoons. Samples may be collected using direct push sampling equipment. However, blow counts will not be available. A pocket penetrometer may be used instead to determine relative soil density of fine grained materials (silts and clays).

Sample also may be collected using a 300-pound hammer or 3-inch-diameter split-spoon samples at the site. However, use of either of these sample collection devices invalidates standard penetration test results and should be noted in the comments section of the log. The 300-pound hammer should only be used for collection of 3-inch-diameter split-spoon samples. Blow counts should be recorded for collection of samples using either a 3-inch split-spoon, or a 300-pound hammer. An "N" value need not be calculated.

Soil Description. The soil classification should follow the format described in the "Field Classification of Soil" subsection below.

Comments. Include all pertinent observations (changes in drilling fluid color, rod drops, drilling chatter, rod bounce as in driving on a cobble, damaged Shelby tubes, and equipment malfunctions). In addition, note if casing was used, the sizes and depths installed, and if drilling fluid was added or changed. You should instruct the driller to alert you to any significant changes in drilling (changes in material, occurrence of boulders, and loss of drilling fluid). Such information should be attributed to the driller and recorded in this column.

Specific information might include the following:

- The date and the time drilling began and ended each day
- The depth and size of casing and the method of installation
- The date, time, and depth of water level measurements
- Depth of rod chatter
- Depth and percentage of drilling fluid loss
- Depth of hole caving or heaving
- Depth of change in material
- Health and safety monitoring data
- Drilling interval through a boulder

D. Field Classification of Soil

This section presents the format for the field classification of soil. In general, the approach and format for classifying soils should conform to ASTM D 2488, Visual-Manual Procedure for Description and Identification of Soils (attached).

The Unified Soil Classification System is based on numerical values of certain soil properties that are measured by laboratory tests. It is possible, however, to estimate these values in the field with reasonable accuracy using visual-manual procedures (ASTM D 2488). In addition, some elements of a complete soil

description, such as the presence of cobbles or boulders, changes in strata, and the relative proportions of soil types in a bedded deposit, can be obtained only in the field.

Soil descriptions should be precise and comprehensive without being verbose. The correct overall impression of the soil should not be distorted by excessive emphasis on insignificant details. In general, similarities rather than differences between consecutive samples should be stressed.

Soil descriptions must be recorded for every soil sample collected. The format and order for soil descriptions should be as follows:

1. Soil name (synonymous with ASTM D 2488 Group Name) with appropriate modifiers. Soil name should be in all capitals in the log, for example "POORLY-GRADED SAND."
2. Group symbol, in parentheses, for example, "(SP)."
3. Color, using Munsell color designation
4. Moisture content
5. Relative density or consistency
6. Soil structure, mineralogy, or other descriptors

This order follows, in general, the format described in ASTM D 2488.

E. Soil Name

The basic name of a soil should be the ASTM D 2488 Group Name on the basis of visual estimates of gradation and plasticity. The soil name should be capitalized.

Examples of acceptable soil names are illustrated by the following descriptions:

- A soil sample is visually estimated to contain 15 percent gravel, 55 percent sand, and 30 percent fines (passing No. 200 sieve). The fines are estimated as either low or highly plastic silt. This visual classification is SILTY SAND WITH GRAVEL, with a Group Symbol of (SM).
- Another soil sample has the following visual estimate: 10 percent gravel, 30 percent sand, and 60 percent fines (passing the No. 200 sieve). The fines are estimated as low plastic silt. This visual classification is SANDY SILT. The gravel portion is not included in the soil name because the gravel portion was estimated as less than 15 percent. The Group Symbol is (ML).

The gradation of coarse-grained soil (more than 50 percent retained on No. 200 sieve) is included in the specific soil name in accordance with ASTM D 2488. There is no need to further document the gradation. However, the maximum size and angularity or roundness of gravel and sand-sized particles should be recorded. For fine-grained soil (50 percent or more passing the No. 200 sieve), the name is modified by the appropriate plasticity/elasticity term in accordance with ASTM D 2488.

Interlayered soil should each be described starting with the predominant type. An introductory name, such as "Interlayered Sand and Silt," should be used. In addition, the relative proportion of each soil type should be indicated (see Table 1 for example).

Where helpful, the evaluation of plasticity/elasticity can be justified by describing results from any of the visual-manual procedures for identifying fine-grained soils, such as reaction to shaking, toughness of a soil thread, or dry strength as described in ASTM D 2488.

F. Group Symbol

The appropriate group symbol from ASTM D 2488 must be given after each soil name. The group symbol should be placed in parentheses to indicate that the classification has been estimated.

In accordance with ASTM D 2488, dual symbols (e.g., GP-GM or SW-SC) can be used to indicate that a soil is estimated to have about 10 percent fines. Borderline symbols (e.g., GM/SM or SW/SP) can be used to indicate that a soil sample has been identified as having properties that do not distinctly place the soil into a specific group. Generally, the group name assigned to a soil with a borderline symbol should be the group name for the first symbol. The use of a borderline symbol should not be used indiscriminately. Every effort should be made to first place the soil into a single group.

G. Color

The color of a soil must be given. The color description should be based on the Munsell system. The color name and the hue, value, and chroma should be given.

H. Moisture Content

The degree of moisture present in a soil sample should be defined as dry, moist, or wet. Moisture content can be estimated from the criteria listed on Table 2.

I. Relative Density or Consistency

Relative density of a coarse-grained (cohesionless) soil is based on N-values (ASTM D 1586 [attached]). If the presence of large gravel, disturbance of the sample, or non-standard sample collection makes determination of the in situ relative density or consistency difficult, then this item should be left out of the description and explained in the Comments column of the soil boring log.

Consistency of fine-grained (cohesive) soil is properly based on results of pocket penetrometer or torvane results. In the absence of this information, consistency can be estimated from N-values. Relationships for determining relative density or consistency of soil samples are given in Tables 3 and 4.

J. Soil Structure, Mineralogy, and Other Descriptors

Discontinuities and inclusions are important and should be described. Such features include joints or fissures, slickensides, bedding or laminations, veins, root holes, and wood debris.

Significant mineralogical information such as cementation, abundant mica, or unusual mineralogy should be described.

Other descriptors may include particle size range or percentages, particle angularity or shape, maximum particle size, hardness of large particles, plasticity of fines, dry strength, dilatancy, toughness, reaction to HCl, and staining, as well as other information such as organic debris, odor, or presence of free product.

K. Equipment and Calibration

Before starting the testing, the equipment should be inspected for compliance with the requirements of ASTM D 1586. The split-barrel sampler should measure 2-inch or 3-inch O.D., and should have a split tube at least 18 inches long. The minimum size sampler rod allowed is "A" rod (1-5/8-inch O.D.). A stiffer rod, such as an "N" rod (2-5/8-inch O.D.), is required for depths greater than 50 feet. The drive weight assembly should consist of a 140-pound or 300-pound hammer weight, a drive head, and a hammer guide that permits a free fall of 30 inches.

IV. Attachments

Soil Boring Log (Sample Soil Boring Log.xls)

CH2M HILL Form D1586 and a completed example (Soil_Log_Examp.pdf)

ASTM D 2488 *Standard Practice for Description and Identification of Soils (Visual-Manual Procedures)* (ASTM D2488.pdf)

ASTM 1586 *Standard Test Method for Penetration Test and Split-Barrel Sampling of Soils* (ASTM D1586.pdf)

Tables 1 through 4 (Tables 1-4.pdf)

V. Key Checks and Preventive Maintenance

- Check entries to the soil-boring log and field logbook in the field; because the samples will be disposed of at the end of fieldwork, confirmation and corrections cannot be made later.
- Check that sample numbers and intervals are properly specified.
- Check that drilling and sampling equipment is decontaminated using the procedures defined in SOP *Decontamination of Drilling Rigs and Equipment*.

CH2MHILL

PROJECT NUMBER	BORING NUMBER

SOIL BORING LOG

PROJECT : LOCATION :

ELEVATION : DRILLING CONTRACTOR :

DRILLING METHOD AND EQUIPMENT USED :

ATD WATER LEVEL : START : END : LOGGER :

DEPTH BELOW SURFACE (FT)	INTERVAL (FT)	RECOVERY (FT)	SAMPLE #/TYPE	STANDARD PENETRATION TEST RESULTS 6"-6"-6" (N')	SOIL DESCRIPTION SOIL NAME, USCS GROUP SYMBOL, COLOR, MOISTURE CONTENT, RELATIVE DENSITY, OR CONSISTENCY, SOIL STRUCTURE, MINERALOGY.	USCS	COMMENTS DEPTH OF CASING, DRILLING RATE, DRILLING FLUID LOSS, TESTS, AND INSTRUMENTATION. DRILLING ACTIONS/DRILLER COMMENTS PID Readings: Breathing Zone: Above Hole:

Designation: D 1586 – 08

Standard Test Method for Standard Penetration Test (SPT) and Split-Barrel Sampling of Soils[1]

This standard is issued under the fixed designation D 1586; the number immediately following the designation indicates the year of original adoption or, in the case of revision, the year of last revision. A number in parentheses indicates the year of last reapproval. A superscript epsilon (ε) indicates an editorial change since the last revision or reapproval.

This standard has been approved for use by agencies of the Department of Defense.

1. Scope*

1.1 This test method describes the procedure, generally known as the Standard Penetration Test (SPT), for driving a split-barrel sampler to obtain a representative disturbed soil sample for identification purposes, and measure the resistance of the soil to penetration of the sampler. Another method (Test Method D 3550) to drive a split-barrel sampler to obtain a representative soil sample is available but the hammer energy is not standardized.

1.2 Practice D 6066 gives a guide to determining the normalized penetration resistance of sands for energy adjustments of N-value to a constant energy level for evaluating liquefaction potential.

1.3 Test results and identification information are used to estimate subsurface conditions for foundation design.

1.4 Penetration resistance testing is typically performed at 5-foot depth intervals or when a significant change of materials is observed during drilling, unless otherwise specified.

1.5 This test method is limited to use in nonlithified soils and soils whose maximum particle size is approximately less than one-half of the sampler diameter.

1.6 This test method involves use of rotary drilling equipment (Guide D 5783, Practice D 6151). Other drilling and sampling procedures (Guide D 6286, Guide D 6169) are available and may be more appropriate. Considerations for hand driving or shallow sampling without boreholes are not addressed. Subsurface investigations should be recorded in accordance with Practice D 5434. Samples should be preserved and transported in accordance with Practice D 4220 using Group B. Soil samples should be identified by group name and symbol in accordance with Practice D 2488.

1.7 All observed and calculated values shall conform to the guidelines for significant digits and rounding established in Practice D 6026, unless superseded by this test method.

1.8 The values stated in inch-pound units are to be regarded as standard, except as noted below. The values given in parentheses are mathematical conversions to SI units, which are provided for information only and are not considered standard.

1.8.1 The gravitational system of inch-pound units is used when dealing with inch-pound units. In this system, the pound (lbf) represents a unit of force (weight), while the unit for mass is slugs.

1.9 Penetration resistance measurements often will involve safety planning, administration, and documentation. This test method does not purport to address all aspects of exploration and site safety. *This standard does not purport to address all of the safety concerns, if any, associated with its use. It is the responsibility of the user of this standard to establish appropriate safety and health practices and determine the applicability of regulatory limitations prior to use.* Performance of the test usually involves use of a drill rig; therefore, safety requirements as outlined in applicable safety standards (for example, OSHA regulations,[2] NDA Drilling Safety Guide,[3] drilling safety manuals, and other applicable state and local regulations) must be observed.

2. Referenced Documents

2.1 *ASTM Standards:* [4]

D 653 Terminology Relating to Soil, Rock, and Contained Fluids

D 854 Test Methods for Specific Gravity of Soil Solids by Water Pycnometer

D 1587 Practice for Thin-Walled Tube Sampling of Soils for Geotechnical Purposes

D 2216 Test Methods for Laboratory Determination of Water (Moisture) Content of Soil and Rock by Mass

D 2487 Practice for Classification of Soils for Engineering Purposes (Unified Soil Classification System)

D 2488 Practice for Description and Identification of Soils

[1] This method is under the jurisdiction of ASTM Committee D18 on Soil and Rock and is the direct responsibility of Subcommittee D18.02 on Sampling and Related Field Testing for Soil Evaluations.

Current edition approved Feb. 1, 2008. Published March 2008. Originally approved in 1958. Last previous edition approved in 1999 as D 1586 – 99.

[2] Available from Occupational Safety and Health Administration (OSHA), 200 Constitution Ave., NW, Washington, DC 20210, http://www.osha.gov.

[3] Available from the National Drilling Association, 3511 Center Rd., Suite 8, Brunswick, OH 44212, http://www.nda4u.com.

[4] For referenced ASTM standards, visit the ASTM website, www.astm.org, or contact ASTM Customer Service at service@astm.org. For *Annual Book of ASTM Standards* volume information, refer to the standard's Document Summary page on the ASTM website.

***A Summary of Changes section appears at the end of this standard.**

Copyright © ASTM International, 100 Barr Harbor Drive, PO Box C700, West Conshohocken, PA 19428-2959, United States.

Copyright ASTM International
Provided by IHS under license with ASTM
No reproduction or networking permitted without license from IHS

Licensee=Herndon, VA/5960458008, User=Carter, Lisa
Not for Resale, 04/11/2008 08:08:12 MDT

(Visual-Manual Procedure)

D 3550 Practice for Thick Wall, Ring-Lined, Split Barrel, Drive Sampling of Soils

D 3740 Practice for Minimum Requirements for Agencies Engaged in the Testing and/or Inspection of Soil and Rock as Used in Engineering Design and Construction

D 4220 Practices for Preserving and Transporting Soil Samples

D 4633 Test Method for Energy Measurement for Dynamic Penetrometers

D 5434 Guide for Field Logging of Subsurface Explorations of Soil and Rock

D 5783 Guide for Use of Direct Rotary Drilling with Water-Based Drilling Fluid for Geoenvironmental Exploration and the Installation of Subsurface Water-Quality Monitoring Devices

D 6026 Practice for Using Significant Digits in Geotechnical Data

D 6066 Practice for Determining the Normalized Penetration Resistance of Sands for Evaluation of Liquefaction Potential

D 6151 Practice for Using Hollow-Stem Augers for Geotechnical Exploration and Soil Sampling

D 6169 Guide for Selection of Soil and Rock Sampling Devices Used With Drill Rigs for Environmental Investigations

D 6286 Guide for Selection of Drilling Methods for Environmental Site Characterization

D 6913 Test Methods for Particle-Size Distribution (Gradation) of Soils Using Sieve Analysis

3. Terminology

3.1 *Definitions:* Definitions of terms included in Terminology D 653 specific to this practice are:

3.1.1 *cathead, n*—the rotating drum or windlass in the rope-cathead lift system around which the operator wraps a rope to lift and drop the hammer by successively tightening and loosening the rope turns around the drum.

3.1.2 *drill rods, n*—rods used to transmit downward force and torque to the drill bit while drilling a borehole.

3.1.3 *N-value, n*—the blow count representation of the penetration resistance of the soil. The *N*-value, reported in blows per foot, equals the sum of the number of blows (*N*) required to drive the sampler over the depth interval of 6 to 18 in. (150 to 450 mm) (see 7.3).

3.1.4 *Standard Penetration Test (SPT), n*—a test process in the bottom of the borehole where a split-barrel sampler having an inside diameter of either 1-1/2-in. (38.1 mm) or 1-3/8-in. (34.9 mm) (see Note 2) is driven a given distance of 1.0 ft (0.30 m) after a seating interval of 0.5 ft (0.15 m) using a hammer weighing approximately 140-lbf (623-N) falling 30 ± 1.0 in. (0.76 m ± 0.030 m) for each hammer blow.

3.2 *Definitions of Terms Specific to This Standard:*

3.2.1 *anvil, n*—that portion of the drive-weight assembly which the hammer strikes and through which the hammer energy passes into the drill rods.

3.2.2 *drive weight assembly, n*—an assembly that consists of the hammer, anvil, hammer fall guide system, drill rod attachment system, and any hammer drop system hoisting attachments.

3.2.3 *hammer, n*—that portion of the drive-weight assembly consisting of the 140 ± 2 lbf (623 ± 9 N) impact weight which is successively lifted and dropped to provide the energy that accomplishes the sampling and penetration.

3.2.4 *hammer drop system, n*—that portion of the drive-weight assembly by which the operator or automatic system accomplishes the lifting and dropping of the hammer to produce the blow.

3.2.5 *hammer fall guide, n*—that part of the drive-weight assembly used to guide the fall of the hammer.

3.2.6 *number of rope turns, n*—the total contact angle between the rope and the cathead at the beginning of the operator's rope slackening to drop the hammer, divided by 360° (see Fig. 1).

3.2.7 *sampling rods, n*—rods that connect the drive-weight assembly to the sampler. Drill rods are often used for this purpose.

4. Significance and Use

4.1 This test method provides a disturbed soil sample for moisture content determination, for identification and classification (Practices D 2487 and D 2488) purposes, and for laboratory tests appropriate for soil obtained from a sampler that will produce large shear strain disturbance in the sample such as Test Methods D 854, D 2216, and D 6913. Soil deposits containing gravels, cobbles, or boulders typically result in penetration refusal and damage to the equipment.

4.2 This test method provides a disturbed soil sample for moisture content determination and laboratory identification. Sample quality is generally not suitable for advanced laboratory testing for engineering properties. The process of driving the sampler will cause disturbance of the soil and change the engineering properties. Use of the thin wall tube sampler (Practice D 1587) may result in less disturbance in soft soils. Coring techniques may result in less disturbance than SPT sampling for harder soils, but it is not always the case, that is, some cemented soils may become loosened by water action during coring; see Practice D 6151, and Guide D 6169.

4.3 This test method is used extensively in a great variety of geotechnical exploration projects. Many local correlations and widely published correlations which relate blow count, or *N*-value, and the engineering behavior of earthworks and foundations are available. For evaluating the liquefaction potential of sands during an earthquake event, the *N*-value should be normalized to a standard overburden stress level. Practice D 6066 provides methods to obtain a record of normalized resistance of sands to the penetration of a standard sampler driven by a standard energy. The penetration resistance is adjusted to drill rod energy ratio of 60 % by using a hammer system with either an estimated energy delivery or directly measuring drill rod stress wave energy using Test Method D 4633.

NOTE 1—The reliability of data and interpretations generated by this practice is dependent on the competence of the personnel performing it

yright ASTM International
vided by IHS under license with ASTM
reproduction or networking permitted without license from IHS

Licensee=Herndon, VA/5960458008, User=Carter, Lisa
Not for Resale, 04/11/2008 08:08:12 MDT

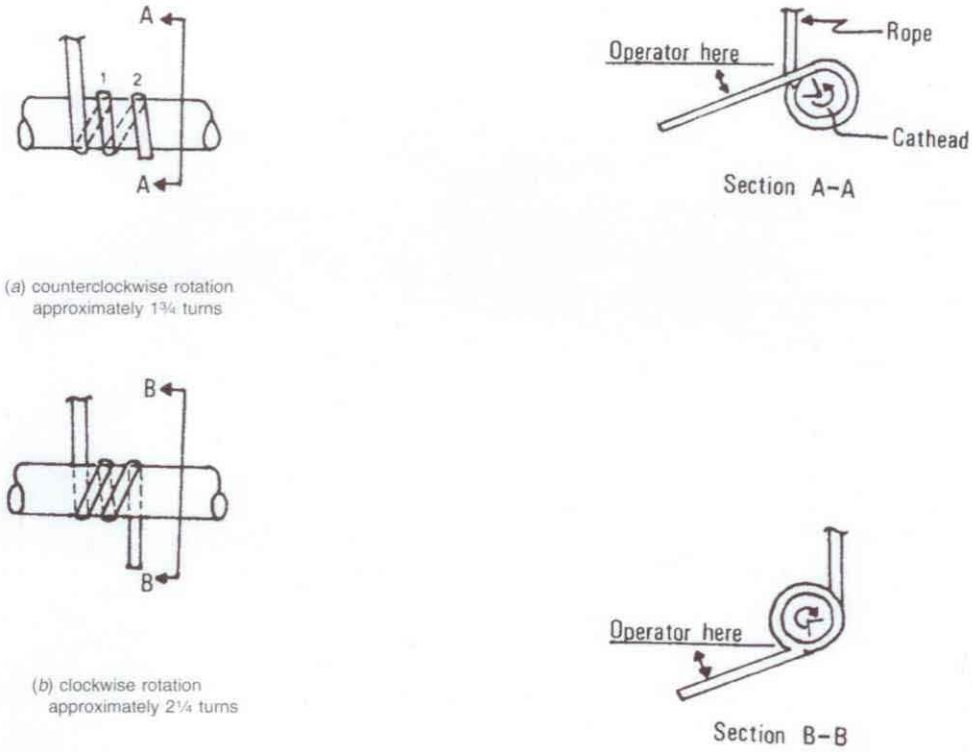

(*a*) counterclockwise rotation approximately 1¾ turns

(*b*) clockwise rotation approximately 2¼ turns

FIG. 1 Definitions of the Number of Rope Turns and the Angle for (*a*) Counterclockwise Rotation and (*b*) Clockwise Rotation of the Cathead

and the suitability of the equipment and facilities used. Agencies that meet the criteria of Practice D 3740 generally are considered capable of competent testing. Users of this practice are cautioned that compliance with Practice D 3740 does not assure reliable testing. Reliable testing depends on several factors and Practice D 3740 provides a means of evaluating some of these factors. Practice D 3740 was developed for agencies engaged in the testing, inspection, or both, of soils and rock. As such, it is not totally applicable to agencies performing this practice. Users of this test method should recognize that the framework of Practice D 3740 is appropriate for evaluating the quality of an agency performing this test method. Currently, there is no known qualifying national authority that inspects agencies that perform this test method.

5. Apparatus

5.1 *Drilling Equipment*—Any drilling equipment that provides at the time of sampling a suitable borehole before insertion of the sampler and ensures that the penetration test is performed on undisturbed soil shall be acceptable. The following pieces of equipment have proven to be suitable for advancing a borehole in some subsurface conditions:

5.1.1 *Drag, Chopping, and Fishtail Bits*, less than 6½ in. (165 mm) and greater than 2¼ in. (57 mm) in diameter may be used in conjunction with open-hole rotary drilling or casing-advancement drilling methods. To avoid disturbance of the underlying soil, bottom discharge bits are not permitted; only side discharge bits are permitted.

5.1.2 *Roller-Cone Bits*, less than 6½ in. (165 mm) and greater than 2¼ in. (57 mm) in diameter may be used in conjunction with open-hole rotary drilling or casing-advancement drilling methods if the drilling fluid discharge is deflected.

5.1.3 *Hollow-Stem Continuous Flight Augers*, with or without a center bit assembly, may be used to drill the borehole. The inside diameter of the hollow-stem augers shall be less than 6½ in. (165 mm) and not less than 2¼ in. (57 mm).

5.1.4 *Solid, Continuous Flight, Bucket and Hand Augers*, less than 6½ in. (165 mm) and not less than 2¼ in. (57 mm) in diameter may be used if the soil on the side of the borehole does not cave onto the sampler or sampling rods during sampling.

5.2 *Sampling Rods*—Flush-joint steel drill rods shall be used to connect the split-barrel sampler to the drive-weight assembly. The sampling rod shall have a stiffness (moment of inertia) equal to or greater than that of parallel wall "A" rod (a steel rod that has an outside diameter of 1-5/8 in. (41.3 mm) and an inside diameter of 1-1/8 in. (28.5 mm).

5.3 *Split-Barrel Sampler*—The standard sampler dimensions are shown in Fig. 2. The sampler has an outside diameter of 2.00 in. (50.8 mm). The inside diameter of the of the split-barrel (dimension D in Fig. 2) can be either 1½-in. (38.1

Copyright ASTM International
Provided by IHS under license with ASTM
No reproduction or networking permitted without license from IHS
Licensee=Herndon, VA/5960458008, User=Carter, Lisa
Not for Resale, 04/11/2008 08:08:12 MDT

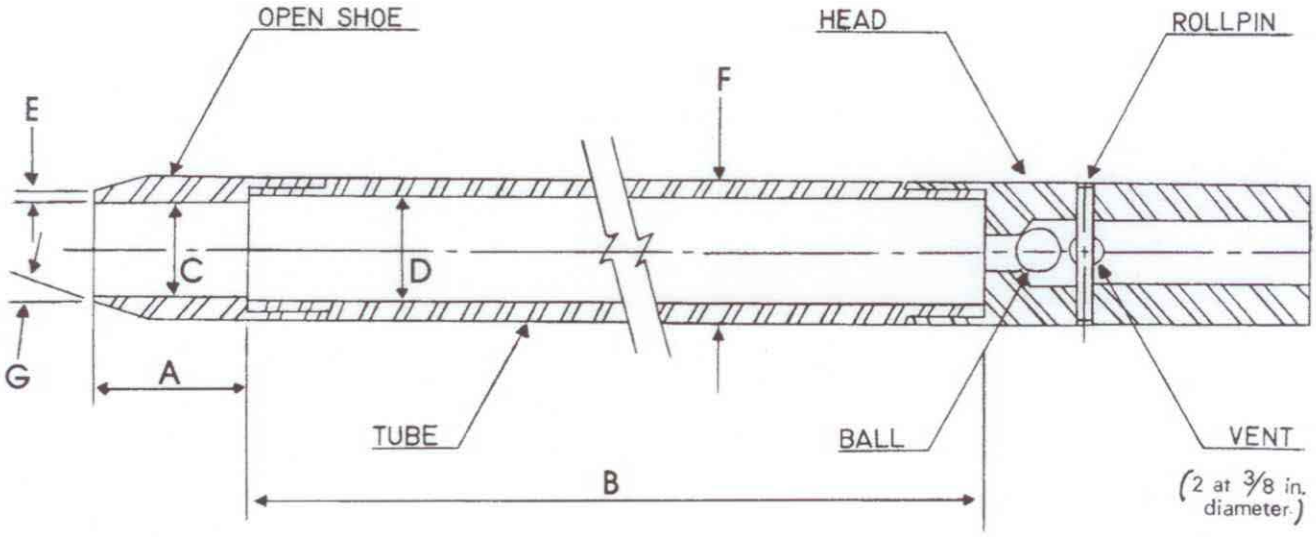

A = 1.0 to 2.0 in. (25 to 50 mm)
B = 18.0 to 30.0 in. (0.457 to 0.762 m)
C = 1.375 ± 0.005 in. (34.93 ± 0.13 mm)
D = 1.50 ± 0.05 – 0.00 in. (38.1 ± 1.3 – 0.0 mm)
E = 0.10 ± 0.02 in. (2.54 ± 0.25 mm)
F = 2.00 ± 0.05 – 0.00 in. (50.8 ± 1.3 – 0.0 mm)
G = 16.0° to 23.0°

FIG. 2 Split-Barrel Sampler

mm) or 1⅜-in. (34.9 mm) (see Note 2). A 16-gauge liner can be used inside the 1½-in. (38.1 mm) split barrel sampler. The driving shoe shall be of hardened steel and shall be replaced or repaired when it becomes dented or distorted. The penetrating end of the drive shoe may be slightly rounded. The split-barrel sampler must be equipped with a ball check and vent. Metal or plastic baskets may be used to retain soil samples.

NOTE 2—Both theory and available test data suggest that *N*-values may differ as much as 10 to 30 % between a constant inside diameter sampler and upset wall sampler. If it is necessary to correct for the upset wall sampler refer to Practice D 6066. In North America, it is now common practice to use an upset wall sampler with an inside diameter of 1½ in. At one time, liners were used but practice evolved to use the upset wall sampler without liners. Use of an upset wall sampler allows for use of retainers if needed, reduces inside friction, and improves recovery. Many other countries still use a constant ID split-barrel sampler, which was the original standard and still acceptable within this standard.

5.4 *Drive-Weight Assembly*:

5.4.1 *Hammer and Anvil*—The hammer shall weigh 140 ± 2 lbf (623 ± 9 N) and shall be a rigid metallic mass. The hammer shall strike the anvil and make steel on steel contact when it is dropped. A hammer fall guide permitting an unimpeded fall shall be used. Fig. 3 shows a schematic of such hammers. Hammers used with the cathead and rope method shall have an unimpeded over lift capacity of at least 4 in. (100 mm). For safety reasons, the use of a hammer assembly with an internal anvil is encouraged as shown in Fig. 3. The total mass of the hammer assembly bearing on the drill rods should not be more than 250 ± 10 lbm (113 ± 5 kg).

NOTE 3—It is suggested that the hammer fall guide be permanently marked to enable the operator or inspector to judge the hammer drop height.

5.4.2 *Hammer Drop System*—Rope-cathead, trip, semi-automatic or automatic hammer drop systems, as shown in Fig. 4 may be used, providing the lifting apparatus will not cause penetration of the sampler while re-engaging and lifting the hammer.

5.5 *Accessory Equipment*—Accessories such as labels, sample containers, data sheets, and groundwater level measuring devices shall be provided in accordance with the requirements of the project and other ASTM standards.

6. Drilling Procedure

6.1 The borehole shall be advanced incrementally to permit intermittent or continuous sampling. Test intervals and locations are normally stipulated by the project engineer or geologist. Typically, the intervals selected are 5 ft (1.5 m) or less in homogeneous strata with test and sampling locations at every change of strata. Record the depth of drilling to the nearest 0.1 ft (0.030 m).

6.2 Any drilling procedure that provides a suitably clean and stable borehole before insertion of the sampler and assures that the penetration test is performed on essentially undisturbed soil shall be acceptable. Each of the following procedures has proven to be acceptable for some subsurface conditions. The subsurface conditions anticipated should be considered when selecting the drilling method to be used.

6.2.1 Open-hole rotary drilling method.

6.2.2 Continuous flight hollow-stem auger method.

6.2.3 Wash boring method.

6.2.4 Continuous flight solid auger method.

6.3 Several drilling methods produce unacceptable boreholes. The process of jetting through an open tube sampler and

Copyright ASTM International
Provided by IHS under license with ASTM
No reproduction or networking permitted without license from IHS

Licensee=Herndon, VA/5960458008, User=Carter, Lisa
Not for Resale, 04/11/2008 08:08:12 MDT

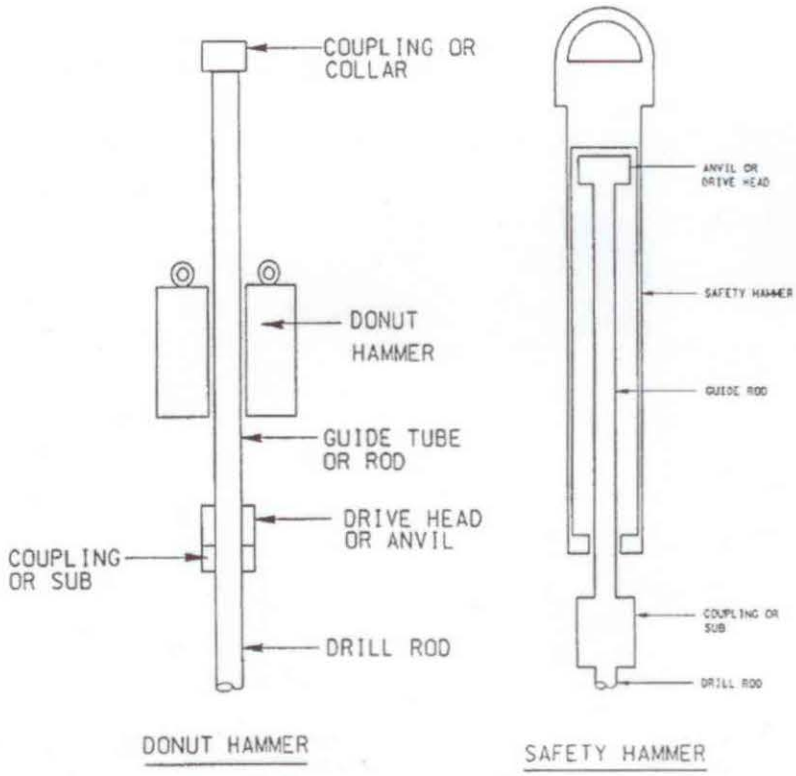

FIG. 3 Schematic Drawing of the Donut Hammer and Safety Hammer

then sampling when the desired depth is reached shall not be permitted. The continuous flight solid auger method shall not be used for advancing the borehole below a water table or below the upper confining bed of a confined non-cohesive stratum that is under artesian pressure. Casing may not be advanced below the sampling elevation prior to sampling. Advancing a borehole with bottom discharge bits is not permissible. It is not permissible to advance the borehole for subsequent insertion of the sampler solely by means of previous sampling with the SPT sampler.

6.4 The drilling fluid level within the borehole or hollow-stem augers shall be maintained at or above the in situ groundwater level at all times during drilling, removal of drill rods, and sampling.

7. Sampling and Testing Procedure

7.1 After the borehole has been advanced to the desired sampling elevation and excessive cuttings have been removed, record the cleanout depth to the nearest 0.1 ft (0.030 m), and prepare for the test with the following sequence of operations:

7.1.1 Attach either split-barrel sampler Type A or B to the sampling rods and lower into the borehole. Do not allow the sampler to drop onto the soil to be sampled.

7.1.2 Position the hammer above and attach the anvil to the top of the sampling rods. This may be done before the sampling rods and sampler are lowered into the borehole.

7.1.3 Rest the dead weight of the sampler, rods, anvil, and drive weight on the bottom of the borehole. Record the sampling start depth to the nearest 0.1 ft (0.030 m). Compare the sampling start depth to the cleanout depth in 7.1. If excessive cuttings are encountered at the bottom of the borehole, remove the sampler and sampling rods from the borehole and remove the cuttings.

7.1.4 Mark the drill rods in three successive 0.5-foot (0.15 m) increments so that the advance of the sampler under the impact of the hammer can be easily observed for each 0.5-foot (0.15 m) increment.

7.2 Drive the sampler with blows from the 140-lbf (623-N) hammer and count the number of blows applied in each 0.5-foot (0.15-m) increment until one of the following occurs:

7.2.1 A total of 50 blows have been applied during any one of the three 0.5-foot (0.15-m) increments described in 7.1.4.

7.2.2 A total of 100 blows have been applied.

7.2.3 There is no observed advance of the sampler during the application of 10 successive blows of the hammer.

7.2.4 The sampler is advanced the complete 1.5 ft. (0.45 m) without the limiting blow counts occurring as described in 7.2.1, 7.2.2, or 7.2.3.

7.2.5 If the sampler sinks under the weight of the hammer, weight of rods, or both, record the length of travel to the nearest 0.1 ft (0.030 m), and drive the sampler through the remainder of the test interval. If the sampler sinks the complete interval, stop the penetration, remove the sampler and sampling rods from the borehole, and advance the borehole through the very soft or very loose materials to the next desired sampling elevation. Record the *N*-value as either weight of hammer, weight of rods, or both.

Copyright ASTM International
Provided by IHS under license with ASTM
No reproduction or networking permitted without license from IHS

Licensee=Herndon, VA/5960458008, User=Carter, Lisa
Not for Resale, 04/11/2008 08:08:12 MDT

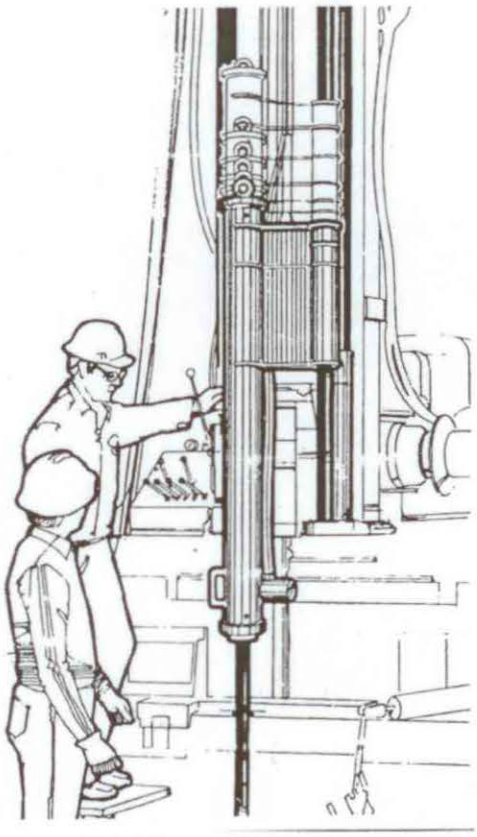

FIG. 4 Automatic Trip Hammer

7.3 Record the number of blows (*N*) required to advance the sampler each 0.5-foot (0.15 m) of penetration or fraction thereof. The first 0.5-foot (0.15 m) is considered to be a seating drive. The sum of the number of blows required for the second and third 0.5-foot (0.15 m) of penetration is termed the "standard penetration resistance," or the "*N*-value." If the sampler is driven less than 1.5 ft (0.45 m), as permitted in 7.2.1, 7.2.2, or 7.2.3, the number of blows per each complete 0.5-foot (0.15 m) increment and per each partial increment shall be recorded on the boring log. For partial increments, the depth of penetration shall be reported to the nearest 0.1 ft (0.030 m) in addition to the number of blows. If the sampler advances below the bottom of the borehole under the static weight of the drill rods or the weight of the drill rods plus the static weight of the hammer, this information should be noted on the boring log.

7.4 The raising and dropping of the 140-lbf (623-N) hammer shall be accomplished using either of the following two methods. Energy delivered to the drill rod by either method can be measured according to procedures in Test Method D 4633.

7.4.1 *Method A*—By using a trip, automatic, or semi-automatic hammer drop system that lifts the 140-lbf (623-N) hammer and allows it to drop 30 ± 1.0 in. (0.76 m ± 0.030 m) with limited unimpedence. Drop heights adjustments for automatic and trip hammers should be checked daily and at first indication of variations in performance. Operation of automatic hammers shall be in strict accordance with operations manuals.

7.4.2 *Method B*—By using a cathead to pull a rope attached to the hammer. When the cathead and rope method is used the system and operation shall conform to the following:

7.4.2.1 The cathead shall be essentially free of rust, oil, or grease and have a diameter in the range of 6 to 10 in. (150 to 250 mm).

7.4.2.2 The cathead should be operated at a minimum speed of rotation of 100 RPM.

7.4.2.3 The operator should generally use either 1-3/4 or 2-1/4 rope turns on the cathead, depending upon whether or not the rope comes off the top (1-3/4 turns for counterclockwise rotation) or the bottom (2-1/4 turns for clockwise rotation) of the cathead during the performance of the penetration test, as shown in Fig. 1. It is generally known and accepted that 2-3/4 or more rope turns considerably impedes the fall of the hammer and should not be used to perform the test. The cathead rope should be stiff, relatively dry, clean, and should be replaced when it becomes excessively frayed, oily, limp, or burned.

7.4.2.4 For each hammer blow, a 30 ± 1.0 in. (0.76 m ± 0.030 m) lift and drop shall be employed by the operator. The operation of pulling and throwing the rope shall be performed rhythmically without holding the rope at the top of the stroke.

NOTE 4—If the hammer drop height is something other than 30 ± 1.0 in. (0.76 m ± 0.030 m), then record the new drop height. For soils other than sands, there is no known data or research that relates to adjusting the *N*-value obtained from different drop heights. Test method D 4633 provides information on making energy measurement for variable drop

Copyright ASTM International
Provided by IHS under license with ASTM
No reproduction or networking permitted without license from IHS

Licensee=Herndon, VA/5960458008, User=Carter, Lisa
Not for Resale, 04/11/2008 08:08:12 MDT

heights and Practice D 6066 provides information on adjustment of *N*-value to a constant energy level (60 % of theoretical, N60). Practice D 6066 allows the hammer drop height to be adjusted to provide 60 % energy.

7.5 Bring the sampler to the surface and open. Record the percent recovery to the nearest 1 % or the length of sample recovered to the nearest 0.01 ft (5 mm). Classify the soil samples recovered as to, in accordance with Practice D 2488, then place one or more representative portions of the sample into sealable moisture-proof containers (jars) without ramming or distorting any apparent stratification. Seal each container to prevent evaporation of soil moisture. Affix labels to the containers bearing job designation, boring number, sample depth, and the blow count per 0.5-foot (0.15-m) increment. Protect the samples against extreme temperature changes. If there is a soil change within the sampler, make a jar for each stratum and note its location in the sampler barrel. Samples should be preserved and transported in accordance with Practice D 4220 using Group B.

8. Data Sheet(s)/Form(s)

8.1 Data obtained in each borehole shall be recorded in accordance with the Subsurface Logging Guide D 5434 as required by the exploration program. An example of a sample data sheet is included in Appendix X1.

8.2 Drilling information shall be recorded in the field and shall include the following:

8.2.1 Name and location of job,

8.2.2 Names of crew,

8.2.3 Type and make of drilling machine,

8.2.4 Weather conditions,

8.2.5 Date and time of start and finish of borehole,

8.2.6 Boring number and location (station and coordinates, if available and applicable),

8.2.7 Surface elevation, if available,

8.2.8 Method of advancing and cleaning the borehole,

8.2.9 Method of keeping borehole open,

8.2.10 Depth of water surface to the nearest 0.1 ft (0.030 m) and drilling depth to the nearest 0.1 ft (0.030 m) at the time of a noted loss of drilling fluid, and time and date when reading or notation was made,

8.2.11 Location of strata changes, to the nearest 0.5 ft (15 cm),

8.2.12 Size of casing, depth of cased portion of borehole to the nearest 0.1 ft (0.030 m),

8.2.13 Equipment and Method A or B of driving sampler,

8.2.14 Sampler length and inside diameter of barrel, and if a sample basket retainer is used,

8.2.15 Size, type, and section length of the sampling rods, and

8.2.16 Remarks.

8.3 Data obtained for each sample shall be recorded in the field and shall include the following:

8.3.1 Top of sample depth to the nearest 0.1 ft (0.030 m) and, if utilized, the sample number,

8.3.2 Description of soil,

8.3.3 Strata changes within sample,

8.3.4 Sampler penetration and recovery lengths to the nearest 0.1 ft (0.030 m), and

8.3.5 Number of blows per 0.5 foot (0.015 m) or partial increment.

9. Precision and Bias

9.1 *Precision*—Test data on precision is not presented due to the nature of this test method. It is either not feasible or too costly at this time to have ten or more agencies participate in an in situ testing program at a given site.

9.1.1 The Subcommittee 18.02 is seeking additional data from the users of this test method that might be used to make a limited statement on precision. Present knowledge indicates the following:

9.1.1.1 Variations in *N*-values of 100 % or more have been observed when using different standard penetration test apparatus and drillers for adjacent boreholes in the same soil formation. Current opinion, based on field experience, indicates that when using the same apparatus and driller, *N*-values in the same soil can be reproduced with a coefficient of variation of about 10 %.

9.1.1.2 The use of faulty equipment, such as an extremely massive or damaged anvil, a rusty cathead, a low speed cathead, an old, oily rope, or massive or poorly lubricated rope sheaves can significantly contribute to differences in *N*-values obtained between operator-drill rig systems.

9.2 *Bias*—There is no accepted reference value for this test method, therefore, bias cannot be determined.

10. Keywords

10.1 blow count; in-situ test; penetration resistance; soil; split-barrel sampling; standard penetration test

Copyright ASTM International
Provided by IHS under license with ASTM
No reproduction or networking permitted without license from IHS

Licensee=Herndon, VA/5960458008, User=Carter, Lisa
Not for Resale, 04/11/2008 08:08:12 MDT

APPENDIX

(Nonmandatory Information)

X1. Example Data Sheet

X1.1 See Fig. 5.

right ASTM International
ded by IHS under license with ASTM
production or networking permitted without license from IHS

Licensee=Herndon, VA/5960458008, User=Carter, Lisa
Not for Resale, 04/11/2008 08:08:12 MDT

DRILLERS BORING LOG

Project: _____ Project No: _____ Boring No: _____

Location: _____ Sheet _____ of _____

Date Started: _____ Date Completed: _____

Drill Crew:

Boring Location
Station _____ Offset _____

Elevation

Strata Depth		Soil Description and Remarks	Sample Type	No.	Depth		Recovery	N-Values		
From	To				From	To		6"	6"	6"

Drill Rig Type _____

Method Of Drilling:

Auger _____ Size _____

Wash _____ Water _____ Mud _____

Hammer Type

Auto _____ Manual _____

Split-Spoon Type

Length _____ Liner Used _____

Boring Size _____ Bit Used _____

Casing Size _____ Length _____

Weather _____

Non-Drilling Time (Hrs.)

Boring Layout _____ Moving _____

Hauling Water _____ Standby _____

Water Level @ _____ Date _____ Time _____

@ _____ Date _____ Time _____

@ _____ Date _____ Time _____

Cave-in Depth

@ _____ Date _____ Time _____

FIG. 5 Example Data Sheet

Copyright ASTM International
Provided by IHS under license with ASTM
No reproduction or networking permitted without license from IHS

Licensee=Herndon, VA/5960458008, User=Carter, Lisa
Not for Resale, 04/11/2008 08:08:12 MDT

SUMMARY OF CHANGES

Committee D18 has identified the location of selected changes to this standard since the last issue (D 1586 – 99) that may impact the use of this standard. (Approved February 1, 2008.)

(*1*) There have been numerous changes to this standard to list them separately. From the most recent main ballot process, additional changes were requested and incorporated into this newest revision. Stated below is a highlight of some of the changes.

(*2*) Scope was completely revised.

(*3*) Referenced Documents updated to include new standards.

(*4*) Terminology: added section on Definitions.

(*5*) Significance and Use: clarified use of the SPT test.

(*6*) Apparatus: general editorial changes.

(*7*) Sampling and Testing Procedure: general editorial changes.

(*8*) Data Sheets/Forms: general editorial changes.

(*9*) Precision and Bias: added Sections 9.1.1.1 and 9.1.1.2.

ASTM International takes no position respecting the validity of any patent rights asserted in connection with any item mentioned in this standard. Users of this standard are expressly advised that determination of the validity of any such patent rights, and the risk of infringement of such rights, are entirely their own responsibility.

This standard is subject to revision at any time by the responsible technical committee and must be reviewed every five years and if not revised, either reapproved or withdrawn. Your comments are invited either for revision of this standard or for additional standards and should be addressed to ASTM International Headquarters. Your comments will receive careful consideration at a meeting of the responsible technical committee, which you may attend. If you feel that your comments have not received a fair hearing you should make your views known to the ASTM Committee on Standards, at the address shown below.

This standard is copyrighted by ASTM International, 100 Barr Harbor Drive, PO Box C700, West Conshohocken, PA 19428-2959, United States. Individual reprints (single or multiple copies) of this standard may be obtained by contacting ASTM at the above address or at 610-832-9585 (phone), 610-832-9555 (fax), or service@astm.org (e-mail); or through the ASTM website (www.astm.org).

Copyright ASTM International
Provided by IHS under license with ASTM
No reproduction or networking permitted without license from IHS

Licensee=Herndon, VA/5960458008, User=Carter, Lisa
Not for Resale, 04/11/2008 08:08:12 MDT

Designation: D 2488 – 00

Standard Practice for Description and Identification of Soils (Visual-Manual Procedure)[1]

This standard is issued under the fixed designation D 2488; the number immediately following the designation indicates the year of original adoption or, in the case of revision, the year of last revision. A number in parentheses indicates the year of last reapproval. A superscript epsilon (ϵ) indicates an editorial change since the last revision or reapproval.

This standard has been approved for use by agencies of the Department of Defense.

1. Scope *

1.1 This practice covers procedures for the description of soils for engineering purposes.

1.2 This practice also describes a procedure for identifying soils, at the option of the user, based on the classification system described in Test Method D 2487. The identification is based on visual examination and manual tests. It must be clearly stated in reporting an identification that it is based on visual-manual procedures.

1.2.1 When precise classification of soils for engineering purposes is required, the procedures prescribed in Test Method D 2487 shall be used.

1.2.2 In this practice, the identification portion assigning a group symbol and name is limited to soil particles smaller than 3 in. (75 mm).

1.2.3 The identification portion of this practice is limited to naturally occurring soils (disturbed and undisturbed).

NOTE 1—This practice may be used as a descriptive system applied to such materials as shale, claystone, shells, crushed rock, etc. (see Appendix X2).

1.3 The descriptive information in this practice may be used with other soil classification systems or for materials other than naturally occurring soils.

1.4 The values stated in inch-pound units are to be regarded as the standard.

1.5 *This standard does not purport to address all of the safety problems, if any, associated with its use. It is the responsibility of the user of this standard to establish appropriate safety and health practices and determine the applicability of regulatory limitations prior to use.* For specific precautionary statements see Section 8.

1.6 *This practice offers a set of instructions for performing one or more specific operations. This document cannot replace education or experience and should be used in conjunction with professional judgment. Not all aspects of this practice may be applicable in all circumstances. This ASTM standard is not intended to represent or replace the standard of care by which the adequacy of a given professional service must be judged, nor should this document be applied without consideration of a project's many unique aspects. The word "Standard" in the title of this document means only that the document has been approved through the ASTM consensus process.*

2. Referenced Documents

2.1 *ASTM Standards:*

D 653 Terminology Relating to Soil, Rock, and Contained Fluids[2]

D 1452 Practice for Soil Investigation and Sampling by Auger Borings[2]

D 1586 Test Method for Penetration Test and Split-Barrel Sampling of Soils[2]

D 1587 Practice for Thin-Walled Tube Sampling of Soils[2]

D 2113 Practice for Diamond Core Drilling for Site Investigation[2]

D 2487 Classification of Soils for Engineering Purposes (Unified Soil Classification System)[2]

D 3740 Practice for Minimum Requirements for Agencies Engaged in the Testing and/or Inspection of Soil and rock as Used in Engineering Design and Construction[3]

D 4083 Practice for Description of Frozen Soils (Visual-Manual Procedure)[2]

3. Terminology

3.1 *Definitions*—Except as listed below, all definitions are in accordance with Terminology D 653.

NOTE 2—For particles retained on a 3-in. (75-mm) US standard sieve, the following definitions are suggested:
Cobbles—particles of rock that will pass a 12-in. (300-mm) square opening and be retained on a 3-in. (75-mm) sieve, and
Boulders—particles of rock that will not pass a 12-in. (300-mm) square opening.

3.1.1 *clay*—soil passing a No. 200 (75-μm) sieve that can be made to exhibit plasticity (putty-like properties) within a range of water contents, and that exhibits considerable strength when air-dry. For classification, a clay is a fine-grained soil, or the fine-grained portion of a soil, with a plasticity index equal to or greater than 4, and the plot of plasticity index versus liquid

[1] This practice is under the jurisdiction of ASTM Committee D-18 on Soil and Rock and is the direct responsibility of Subcommittee D18.07 on Identification and Classification of Soils.

Current edition approved Feb. 10, 2000. Published May 2000. Originally published as D 2488 – 66 T. Last previous edition D 2488 – 93ϵ1.

[2] *Annual Book of ASTM Standards*, Vol 04.08.

[3] *Annual Book of ASTM Standards*, Vol 04.09.

***A Summary of Changes section appears at the end of this standard.**

Copyright © ASTM, 100 Barr Harbor Drive, West Conshohocken, PA 19428-2959, United States.

Copyright ASTM International
Reproduced by IHS under license with ASTM
No reproduction or networking permitted without license from IHS

Licensee=CH2M Hill/5960458001, User=Carter, Lisa
Not for Resale, 08/04/2005 08:22:59 MDT

limit falls on or above the "A" line (see Fig. 3 of Test Method D 2487).

3.1.2 *gravel*—particles of rock that will pass a 3-in. (75-mm) sieve and be retained on a No. 4 (4.75-mm) sieve with the following subdivisions:

coarse—passes a 3-in. (75-mm) sieve and is retained on a ¾-in. (19-mm) sieve.

fine—passes a ¾-in. (19-mm) sieve and is retained on a No. 4 (4.75-mm) sieve.

3.1.3 *organic clay*—a clay with sufficient organic content to influence the soil properties. For classification, an organic clay is a soil that would be classified as a clay, except that its liquid limit value after oven drying is less than 75 % of its liquid limit value before oven drying.

3.1.4 *organic silt*—a silt with sufficient organic content to influence the soil properties. For classification, an organic silt is a soil that would be classified as a silt except that its liquid limit value after oven drying is less than 75 % of its liquid limit value before oven drying.

3.1.5 *peat*—a soil composed primarily of vegetable tissue in various stages of decomposition usually with an organic odor, a dark brown to black color, a spongy consistency, and a texture ranging from fibrous to amorphous.

3.1.6 *sand*—particles of rock that will pass a No. 4 (4.75-mm) sieve and be retained on a No. 200 (75-µm) sieve with the following subdivisions:

coarse—passes a No. 4 (4.75-mm) sieve and is retained on a No. 10 (2.00-mm) sieve.

medium—passes a No. 10 (2.00-mm) sieve and is retained on a No. 40 (425-µm) sieve.

fine—passes a No. 40 (425-µm) sieve and is retained on a No. 200 (75-µm) sieve.

3.1.7 *silt*—soil passing a No. 200 (75-µm) sieve that is nonplastic or very slightly plastic and that exhibits little or no strength when air dry. For classification, a silt is a fine-grained soil, or the fine-grained portion of a soil, with a plasticity index less than 4, or the plot of plasticity index versus liquid limit falls below the "A" line (see Fig. 3 of Test Method D 2487).

4. Summary of Practice

4.1 Using visual examination and simple manual tests, this practice gives standardized criteria and procedures for describing and identifying soils.

4.2 The soil can be given an identification by assigning a group symbol(s) and name. The flow charts, Fig. 1a and Fig. 1b for fine-grained soils, and Fig. 2, for coarse-grained soils, can be used to assign the appropriate group symbol(s) and name. If the soil has properties which do not distinctly place it into a specific group, borderline symbols may be used, see Appendix X3.

NOTE 3—It is suggested that a distinction be made between *dual symbols* and *borderline symbols*.

Dual Symbol—A dual symbol is two symbols separated by a hyphen, for example, GP-GM, SW-SC, CL-ML used to indicate that the soil has been identified as having the properties of a classification in accordance with Test Method D 2487 where two symbols are required. Two symbols are required when the soil has between 5 and 12 % fines or when the liquid limit and plasticity index values plot in the CL-ML area of the plasticity chart.

Borderline Symbol—A borderline symbol is two symbols separated by a slash, for example, CL/CH, GM/SM, CL/ML. A borderline symbol should be used to indicate that the soil has been identified as having properties that do not distinctly place the soil into a specific group (see Appendix X3).

5. Significance and Use

5.1 The descriptive information required in this practice can be used to describe a soil to aid in the evaluation of its significant properties for engineering use.

5.2 The descriptive information required in this practice should be used to supplement the classification of a soil as determined by Test Method D 2487.

5.3 This practice may be used in identifying soils using the classification group symbols and names as prescribed in Test Method D 2487. Since the names and symbols used in this practice to identify the soils are the same as those used in Test Method D 2487, it shall be clearly stated in reports and all other appropriate documents, that the classification symbol and name are based on visual-manual procedures.

5.4 This practice is to be used not only for identification of soils in the field, but also in the office, laboratory, or wherever soil samples are inspected and described.

5.5 This practice has particular value in grouping similar soil samples so that only a minimum number of laboratory tests need be run for positive soil classification.

NOTE 4—The ability to describe and identify soils correctly is learned more readily under the guidance of experienced personnel, but it may also be acquired systematically by comparing numerical laboratory test results for typical soils of each type with their visual and manual characteristics.

5.6 When describing and identifying soil samples from a given boring, test pit, or group of borings or pits, it is not necessary to follow all of the procedures in this practice for every sample. Soils which appear to be similar can be grouped together; one sample completely described and identified with the others referred to as similar based on performing only a few of the descriptive and identification procedures described in this practice.

5.7 This practice may be used in combination with Practice D 4083 when working with frozen soils.

NOTE 5—Notwithstanding the statements on precision and bias contained in this standard: The precision of this test method is dependent on the competence of the personnel performing it and the suitability of the equipment and facilities used. Agencies that meet the criteria of Practice D 3740 are generally considered capable of competent and objective testing. Users of this test method are cautioned that compliance with Practice D 3740 does not in itself assure reliable testing. Reliable testing depends on several factors; Practice D 3740 provides a means for evaluating some of those factors.

6. Apparatus

6.1 *Required Apparatus*:

6.1.1 *Pocket Knife or Small Spatula*.

6.2 *Useful Auxiliary Apparatus*:

6.2.1 *Small Test Tube and Stopper* (or jar with a lid).

6.2.2 *Small Hand Lens*.

7. Reagents

7.1 *Purity of Water*—Unless otherwise indicated, references to water shall be understood to mean water from a city water

Copyright ASTM International
Reproduced by IHS under license with ASTM
No reproduction or networking permitted without license from IHS

Licensee=CH2M Hill/5960458001, User=Carter, Lisa
Not for Resale, 08/04/2005 08:22:59 MDT

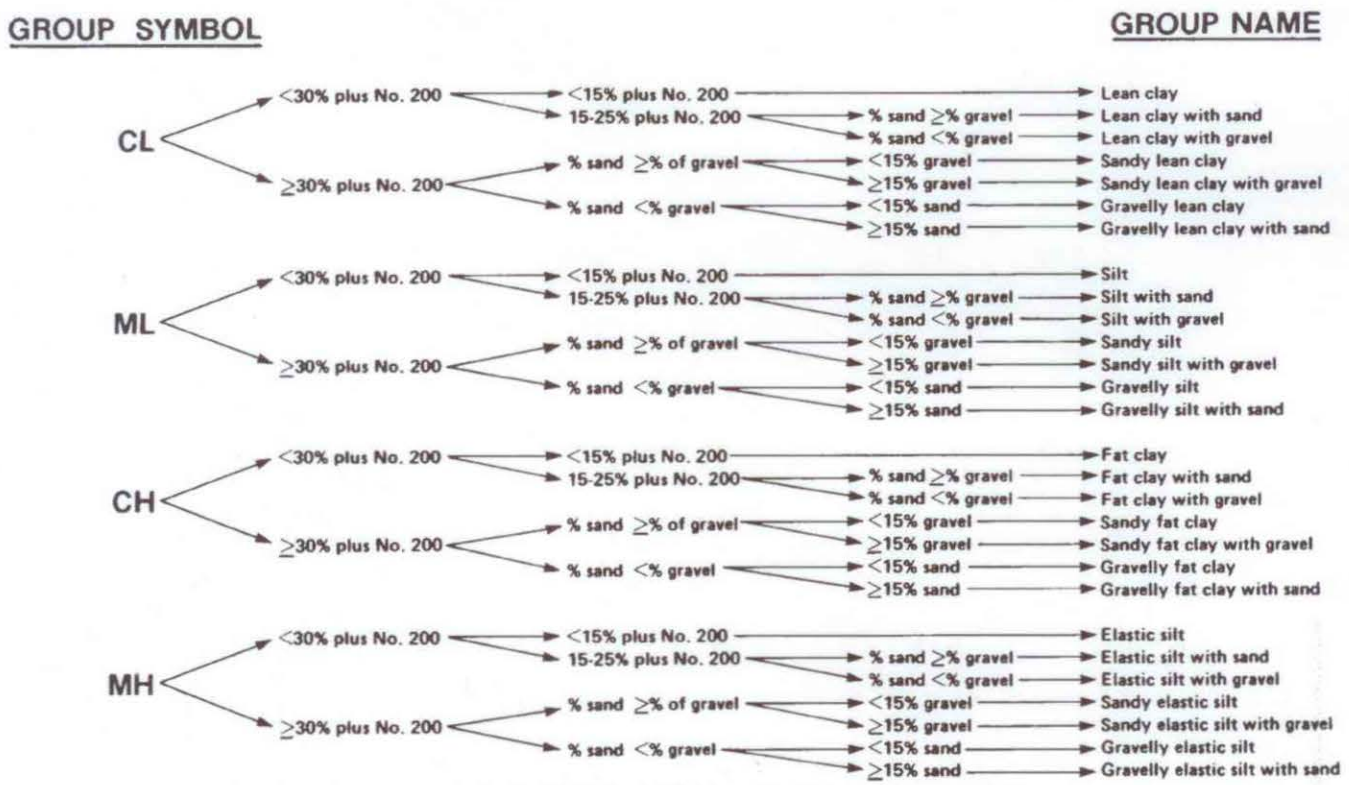

NOTE 1—Percentages are based on estimating amounts of fines, sand, and gravel to the nearest 5 %.

FIG. 1a Flow Chart for Identifying Inorganic Fine-Grained Soil (50 % or more fines)

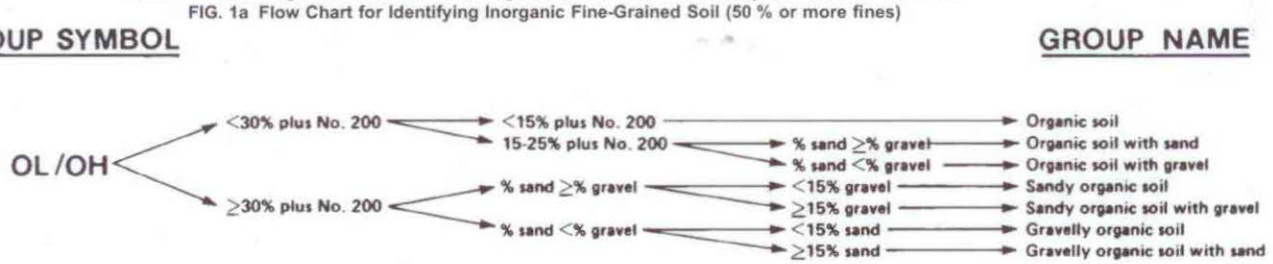

NOTE 1—Percentages are based on estimating amounts of fines, sand, and gravel to the nearest 5 %.

FIG. 1 b Flow Chart for Identifying Organic Fine-Grained Soil (50 % or more fines)

supply or natural source, including non-potable water.

7.2 *Hydrochloric Acid*—A small bottle of dilute hydrochloric acid, HCl, one part HCl (10 *N*) to three parts water (This reagent is optional for use with this practice). See Section 8.

8. Safety Precautions

8.1 When preparing the dilute HCl solution of one part concentrated hydrochloric acid (10 *N*) to three parts of distilled water, slowly add acid into water following necessary safety precautions. Handle with caution and store safely. If solution comes into contact with the skin, rinse thoroughly with water.

8.2 **Caution**—Do not add water to acid.

9. Sampling

9.1 The sample shall be considered to be representative of the stratum from which it was obtained by an appropriate, accepted, or standard procedure.

NOTE 6—Preferably, the sampling procedure should be identified as having been conducted in accordance with Practices D 1452, D 1587, or D 2113, or Test Method D 1586.

9.2 The sample shall be carefully identified as to origin.

NOTE 7—Remarks as to the origin may take the form of a boring number and sample number in conjunction with a job number, a geologic stratum, a pedologic horizon or a location description with respect to a permanent monument, a grid system or a station number and offset with respect to a stated centerline and a depth or elevation.

9.3 For accurate description and identification, the minimum amount of the specimen to be examined shall be in accordance with the following schedule:

Maximum Particle Size, Sieve Opening	Minimum Specimen Size, Dry Weight
4.75 mm (No. 4)	100 g (0.25 lb)
9.5 mm (⅜ in.)	200 g (0.5 lb)
19.0 mm (¾ in.)	1.0 kg (2.2 lb)
38.1 mm (1½ in.)	8.0 kg (18 lb)
75.0 mm (3 in.)	60.0 kg (132 lb)

ight ASTM International
duced by IHS under license with ASTM
production or networking permitted without license from IHS
Licensee=CH2M Hill/5960458001, User=Carter, Lisa
Not for Resale, 08/04/2005 08:22:59 MDT

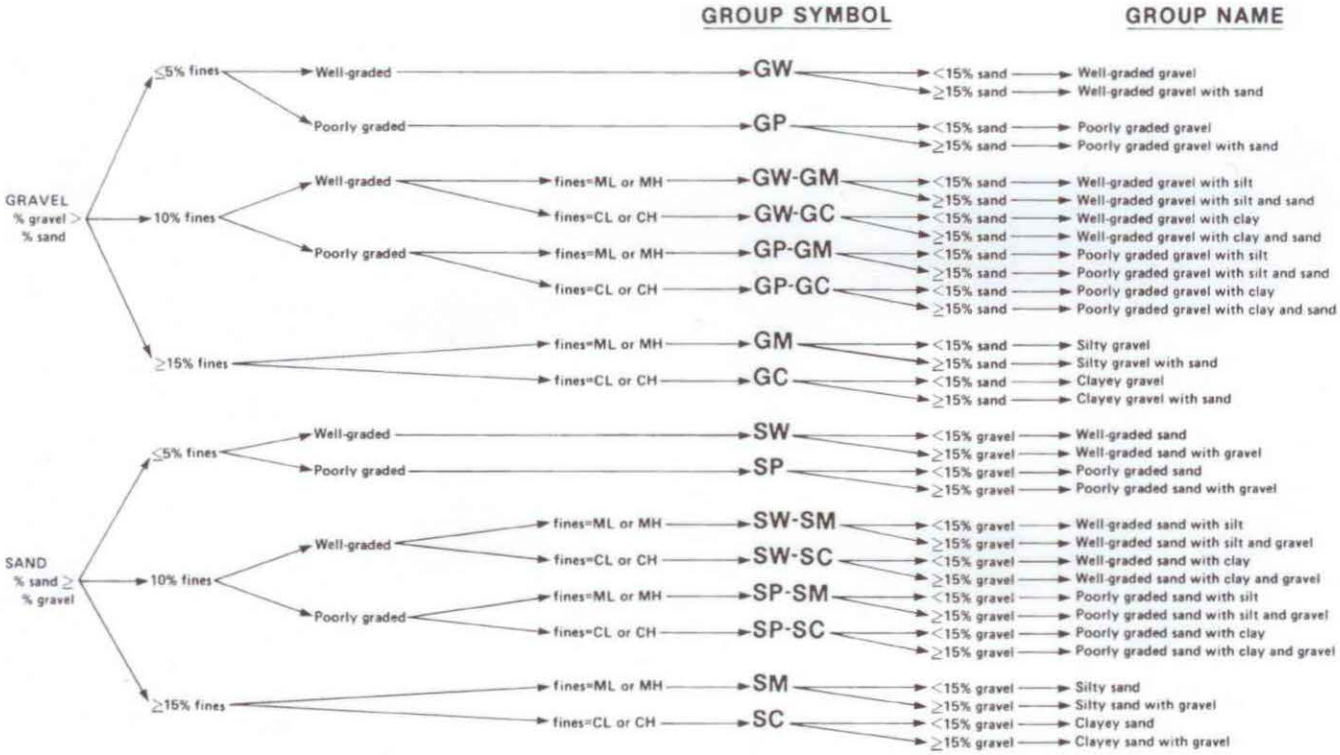

NOTE 1—Percentages are based on estimating amounts of fines, sand, and gravel to the nearest 5 %.

FIG. 2 Flow Chart for Identifying Coarse-Grained Soils (less than 50 % fines)

NOTE 8—If random isolated particles are encountered that are significantly larger than the particles in the soil matrix, the soil matrix can be accurately described and identified in accordance with the preceeding schedule.

9.4 If the field sample or specimen being examined is smaller than the minimum recommended amount, the report shall include an appropriate remark.

10. Descriptive Information for Soils

10.1 *Angularity*—Describe the angularity of the sand (coarse sizes only), gravel, cobbles, and boulders, as angular, subangular, subrounded, or rounded in accordance with the criteria in Table 1 and Fig. 3. A range of angularity may be stated, such as: subrounded to rounded.

10.2 *Shape*—Describe the shape of the gravel, cobbles, and boulders as flat, elongated, or flat and elongated if they meet the criteria in Table 2 and Fig. 4. Otherwise, do not mention the shape. Indicate the fraction of the particles that have the shape, such as: one-third of the gravel particles are flat.

TABLE 1 Criteria for Describing Angularity of Coarse-Grained Particles (see Fig. 3)

Description	Criteria
Angular	Particles have sharp edges and relatively plane sides with unpolished surfaces
Subangular	Particles are similar to angular description but have rounded edges
Subrounded	Particles have nearly plane sides but have well-rounded corners and edges
Rounded	Particles have smoothly curved sides and no edges

10.3 *Color*—Describe the color. Color is an important property in identifying organic soils, and within a given locality it may also be useful in identifying materials of similar geologic origin. If the sample contains layers or patches of varying colors, this shall be noted and all representative colors shall be described. The color shall be described for moist samples. If the color represents a dry condition, this shall be stated in the report.

10.4 *Odor*—Describe the odor if organic or unusual. Soils containing a significant amount of organic material usually have a distinctive odor of decaying vegetation. This is especially apparent in fresh samples, but if the samples are dried, the odor may often be revived by heating a moistened sample. If the odor is unusual (petroleum product, chemical, and the like), it shall be described.

10.5 *Moisture Condition*—Describe the moisture condition as dry, moist, or wet, in accordance with the criteria in Table 3.

10.6 *HCl Reaction*—Describe the reaction with HCl as none, weak, or strong, in accordance with the critera in Table 4. Since calcium carbonate is a common cementing agent, a report of its presence on the basis of the reaction with dilute hydrochloric acid is important.

10.7 *Consistency*—For intact fine-grained soil, describe the consistency as very soft, soft, firm, hard, or very hard, in accordance with the criteria in Table 5. This observation is inappropriate for soils with significant amounts of gravel.

10.8 *Cementation*—Describe the cementation of intact coarse-grained soils as weak, moderate, or strong, in accordance with the criteria in Table 6.

Copyright ASTM International
Reproduced by IHS under license with ASTM
No reproduction or networking permitted without license from IHS

Licensee=CH2M Hill/5960458001, User=Carter, Lisa
Not for Resale, 08/04/2005 08:22:59 MDT

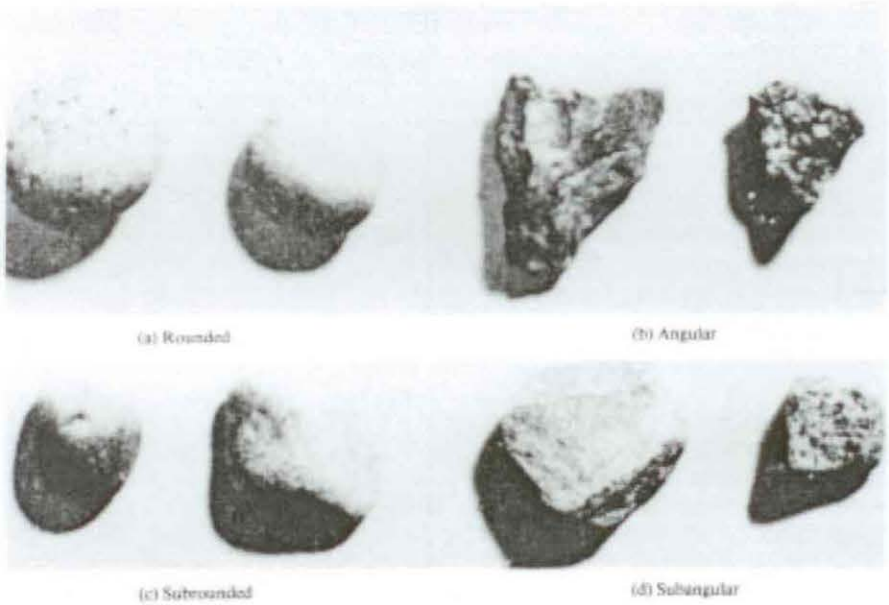

FIG. 3 Typical Angularity of Bulky Grains

TABLE 2 Criteria for Describing Particle Shape (see Fig. 4)

The particle shape shall be described as follows where length, width, and thickness refer to the greatest, intermediate, and least dimensions of a particle, respectively.

Flat	Particles with width/thickness > 3
Elongated	Particles with length/width > 3
Flat and elongated	Particles meet criteria for both flat and elongated

10.9 *Structure*—Describe the structure of intact soils in accordance with the criteria in Table 7.

10.10 *Range of Particle Sizes*—For gravel and sand components, describe the range of particle sizes within each component as defined in 3.1.2 and 3.1.6. For example, about 20 % fine to coarse gravel, about 40 % fine to coarse sand.

10.11 *Maximum Particle Size*—Describe the maximum particle size found in the sample in accordance with the following information:

10.11.1 *Sand Size*—If the maximum particle size is a sand size, describe as fine, medium, or coarse as defined in 3.1.6. For example: maximum particle size, medium sand.

10.11.2 *Gravel Size*—If the maximum particle size is a gravel size, describe the maximum particle size as the smallest sieve opening that the particle will pass. For example, maximum particle size, 1½ in. (will pass a 1½-in. square opening but not a ¾-in. square opening).

10.11.3 *Cobble or Boulder Size*—If the maximum particle size is a cobble or boulder size, describe the maximum dimension of the largest particle. For example: maximum dimension, 18 in. (450 mm).

10.12 *Hardness*—Describe the hardness of coarse sand and larger particles as hard, or state what happens when the particles are hit by a hammer, for example, gravel-size particles fracture with considerable hammer blow, some gravel-size particles crumble with hammer blow. "Hard" means particles do not crack, fracture, or crumble under a hammer blow.

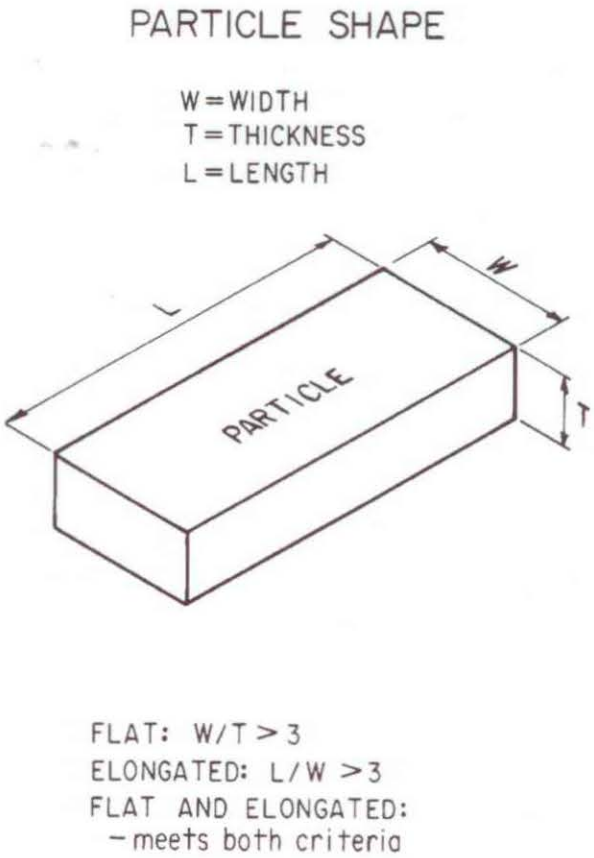

FIG. 4 Criteria for Particle Shape

10.13 Additional comments shall be noted, such as the presence of roots or root holes, difficulty in drilling or augering

Copyright ASTM International
Reproduced by IHS under license with ASTM
No reproduction or networking permitted without license from IHS

Licensee=CH2M Hill/5960458001, User=Carter, Lisa
Not for Resale, 08/04/2005 08:22:59 MDT

TABLE 3 Criteria for Describing Moisture Condition

Description	Criteria
Dry	Absence of moisture, dusty, dry to the touch
Moist	Damp but no visible water
Wet	Visible free water, usually soil is below water table

TABLE 4 Criteria for Describing the Reaction With HCl

Description	Criteria
None	No visible reaction
Weak	Some reaction, with bubbles forming slowly
Strong	Violent reaction, with bubbles forming immediately

TABLE 5 Criteria for Describing Dilatancy

Description	Criteria
Very soft	Thumb will penetrate soil more than 1 in. (25 mm)
Soft	Thumb will penetrate soil about 1 in. (25 mm)
Firm	Thumb will indent soil about ¼in. (6 mm)
Hard	Thumb will not indent soil but readily indented with thumbnail
Very hard	Thumbnail will not indent soil

TABLE 6 Criteria for Describing Toughness

Description	Criteria
Weak	Crumbles or breaks with handling or little finger pressure
Moderate	Crumbles or breaks with considerable finger pressure
Strong	Will not crumble or break with finger pressure

TABLE 7 Criteria for Describing Dilatancy

Description	Criteria
Stratified	Alternating layers of varying material or color with layers at least 6 mm thick; note thickness
Laminated	Alternating layers of varying material or color with the layers less than 6 mm thick; note thickness
Fissured	Breaks along definite planes of fracture with little resistance to fracturing
Slickensided	Fracture planes appear polished or glossy, sometimes striated
Blocky	Cohesive soil that can be broken down into small angular lumps which resist further breakdown
Lensed	Inclusion of small pockets of different soils, such as small lenses of sand scattered through a mass of clay; note thickness
Homogeneous	Same color and appearance throughout

hole, caving of trench or hole, or the presence of mica.

10.14 A local or commercial name or a geologic interpretation of the soil, or both, may be added if identified as such.

10.15 A classification or identification of the soil in accordance with other classification systems may be added if identified as such.

11. Identification of Peat

11.1 A sample composed primarily of vegetable tissue in various stages of decomposition that has a fibrous to amorphous texture, usually a dark brown to black color, and an organic odor, shall be designated as a highly organic soil and shall be identified as peat, PT, and not subjected to the identification procedures described hereafter.

12. Preparation for Identification

12.1 The soil identification portion of this practice is based on the portion of the soil sample that will pass a 3-in. (75-mm) sieve. The larger than 3-in. (75-mm) particles must be removed, manually, for a loose sample, or mentally, for an intact sample before classifying the soil.

12.2 Estimate and note the percentage of cobbles and the percentage of boulders. Performed visually, these estimates will be on the basis of volume percentage.

NOTE 9—Since the percentages of the particle-size distribution in Test Method D 2487 are by dry weight, and the estimates of percentages for gravel, sand, and fines in this practice are by dry weight, it is recommended that the report state that the percentages of cobbles and boulders are by volume.

12.3 Of the fraction of the soil smaller than 3 in. (75 mm), estimate and note the percentage, by dry weight, of the gravel, sand, and fines (see Appendix X4 for suggested procedures).

NOTE 10—Since the particle-size components appear visually on the basis of volume, considerable experience is required to estimate the percentages on the basis of dry weight. Frequent comparisons with laboratory particle-size analyses should be made.

12.3.1 The percentages shall be estimated to the closest 5 %. The percentages of gravel, sand, and fines must add up to 100 %.

12.3.2 If one of the components is present but not in sufficient quantity to be considered 5 % of the smaller than 3-in. (75-mm) portion, indicate its presence by the term *trace*, for example, trace of fines. A trace is not to be considered in the total of 100 % for the components.

13. Preliminary Identification

13.1 The soil is *fine grained* if it contains 50 % or more fines. Follow the procedures for identifying fine-grained soils of Section 14.

13.2 The soil is *coarse grained* if it contains less than 50 % fines. Follow the procedures for identifying coarse-grained soils of Section 15.

14. Procedure for Identifying Fine-Grained Soils

14.1 Select a representative sample of the material for examination. Remove particles larger than the No. 40 sieve (medium sand and larger) until a specimen equivalent to about a handful of material is available. Use this specimen for performing the dry strength, dilatancy, and toughness tests.

14.2 *Dry Strength*:

14.2.1 From the specimen, select enough material to mold into a ball about 1 in. (25 mm) in diameter. Mold the material until it has the consistency of putty, adding water if necessary.

14.2.2 From the molded material, make at least three test specimens. A test specimen shall be a ball of material about ½ in. (12 mm) in diameter. Allow the test specimens to dry in air, or sun, or by artificial means, as long as the temperature does not exceed 60°C.

14.2.3 If the test specimen contains natural dry lumps, those that are about ½ in. (12 mm) in diameter may be used in place of the molded balls.

NOTE 11—The process of molding and drying usually produces higher strengths than are found in natural dry lumps of soil.

14.2.4 Test the strength of the dry balls or lumps by crushing between the fingers. Note the strength as none, low,

Copyright ASTM International
Reproduced by IHS under license with ASTM
No reproduction or networking permitted without license from IHS

Licensee=CH2M Hill/5960458001, User=Carter, Lisa
Not for Resale, 08/04/2005 08:22:59 MDT

medium, high, or very high in accorance with the criteria in Table 8. If natural dry lumps are used, do not use the results of any of the lumps that are found to contain particles of coarse sand.

14.2.5 The presence of high-strength water-soluble cementing materials, such as calcium carbonate, may cause exceptionally high dry strengths. The presence of calcium carbonate can usually be detected from the intensity of the reaction with dilute hydrochloric acid (see 10.6).

14.3 *Dilatancy*:

14.3.1 From the specimen, select enough material to mold into a ball about ½ in. (12 mm) in diameter. Mold the material, adding water if necessary, until it has a soft, but not sticky, consistency.

14.3.2 Smooth the soil ball in the palm of one hand with the blade of a knife or small spatula. Shake horizontally, striking the side of the hand vigorously against the other hand several times. Note the reaction of water appearing on the surface of the soil. Squeeze the sample by closing the hand or pinching the soil between the fingers, and note the reaction as none, slow, or rapid in accordance with the criteria in Table 9. The reaction is the speed with which water appears while shaking, and disappears while squeezing.

14.4 *Toughness*:

14.4.1 Following the completion of the dilatancy test, the test specimen is shaped into an elongated pat and rolled by hand on a smooth surface or between the palms into a thread about ⅛ in. (3 mm) in diameter. (If the sample is too wet to roll easily, it should be spread into a thin layer and allowed to lose some water by evaporation.) Fold the sample threads and reroll repeatedly until the thread crumbles at a diameter of about ⅛ in. The thread will crumble at a diameter of ⅛ in. when the soil is near the plastic limit. Note the pressure required to roll the thread near the plastic limit. Also, note the strength of the thread. After the thread crumbles, the pieces should be lumped together and kneaded until the lump crumbles. Note the toughness of the material during kneading.

14.4.2 Describe the toughness of the thread and lump as low, medium, or high in accordance with the criteria in Table 10.

14.5 *Plasticity*—On the basis of observations made during the toughness test, describe the plasticity of the material in accordance with the criteria given in Table 11.

14.6 Decide whether the soil is an *inorganic* or an *organic* fine-grained soil (see 14.8). If inorganic, follow the steps given in 14.7.

TABLE 8 Criteria for Describing Toughness

Description	Criteria
None	The dry specimen crumbles into powder with mere pressure of handling
Low	The dry specimen crumbles into powder with some finger pressure
Medium	The dry specimen breaks into pieces or crumbles with considerable finger pressure
High	The dry specimen cannot be broken with finger pressure. Specimen will break into pieces between thumb and a hard surface
Very high	The dry specimen cannot be broken between the thumb and a hard surface

TABLE 9 Criteria for Describing Dilatancy

Description	Criteria
None	No visible change in the specimen
Slow	Water appears slowly on the surface of the specimen during shaking and does not disappear or disappears slowly upon squeezing
Rapid	Water appears quickly on the surface of the specimen during shaking and disappears quickly upon squeezing

TABLE 10 Criteria for Describing Toughness

Description	Criteria
Low	Only slight pressure is required to roll the thread near the plastic limit. The thread and the lump are weak and soft
Medium	Medium pressure is required to roll the thread to near the plastic limit. The thread and the lump have medium stiffness
High	Considerable pressure is required to roll the thread to near the plastic limit. The thread and the lump have very high stiffness

TABLE 11 Criteria for Describing Plasticity

Description	Criteria
Nonplastic	A ⅛-in. (3-mm) thread cannot be rolled at any water content
Low	The thread can barely be rolled and the lump cannot be formed when drier than the plastic limit
Medium	The thread is easy to roll and not much time is required to reach the plastic limit. The thread cannot be rerolled after reaching the plastic limit. The lump crumbles when drier than the plastic limit
High	It takes considerable time rolling and kneading to reach the plastic limit. The thread can be rerolled several times after reaching the plastic limit. The lump can be formed without crumbling when drier than the plastic limit

14.7 *Identification of Inorganic Fine-Grained Soils*:

14.7.1 Identify the soil as a *lean clay*, CL, if the soil has medium to high dry strength, no or slow dilatancy, and medium toughness and plasticity (see Table 12).

14.7.2 Identify the soil as a *fat clay*, CH, if the soil has high to very high dry strength, no dilatancy, and high toughness and plasticity (see Table 12).

14.7.3 Identify the soil as a *silt*, ML, if the soil has no to low dry strength, slow to rapid dilatancy, and low toughness and plasticity, or is nonplastic (see Table 12).

14.7.4 Identify the soil as an *elastic silt*, MH, if the soil has low to medium dry strength, no to slow dilatancy, and low to medium toughness and plasticity (see Table 12).

NOTE 12—These properties are similar to those for a lean clay. However, the silt will dry quickly on the hand and have a smooth, silky feel when dry. Some soils that would classify as MH in accordance with the criteria in Test Method D 2487 are visually difficult to distinguish from lean clays, CL. It may be necessary to perform laboratory testing for proper identification.

TABLE 12 Identification of Inorganic Fine-Grained Soils from Manual Tests

Soil Symbol	Dry Strength	Dilatancy	Toughness
ML	None to low	Slow to rapid	Low or thread cannot be formed
CL	Medium to high	None to slow	Medium
MH	Low to medium	None to slow	Low to medium
CH	High to very high	None	High

Copyright ASTM International
Reproduced by IHS under license with ASTM
No reproduction or networking permitted without license from IHS

Licensee=CH2M Hill/5960458001, User=Carter, Lisa
Not for Resale, 08/04/2005 08:22:59 MDT

14.8 *Identification of Organic Fine-Grained Soils*:

14.8.1 Identify the soil as an *organic soil*, OL/OH, if the soil contains enough organic particles to influence the soil properties. Organic soils usually have a dark brown to black color and may have an organic odor. Often, organic soils will change color, for example, black to brown, when exposed to the air. Some organic soils will lighten in color significantly when air dried. Organic soils normally will not have a high toughness or plasticity. The thread for the toughness test will be spongy.

NOTE 13—In some cases, through practice and experience, it may be possible to further identify the organic soils as organic silts or organic clays, OL or OH. Correlations between the dilatancy, dry strength, toughness tests, and laboratory tests can be made to identify organic soils in certain deposits of similar materials of known geologic origin.

14.9 If the soil is estimated to have 15 to 25 % sand or gravel, or both, the words "with sand" or "with gravel" (whichever is more predominant) shall be added to the group name. For example: "lean clay with sand, CL" or "silt with gravel, ML" (see Fig. 1a and Fig. 1b). If the percentage of sand is equal to the percentage of gravel, use "with sand."

14.10 If the soil is estimated to have 30 % or more sand or gravel, or both, the words "sandy" or "gravelly" shall be added to the group name. Add the word "sandy" if there appears to be more sand than gravel. Add the word "gravelly" if there appears to be more gravel than sand. For example: "sandy lean clay, CL", "gravelly fat clay, CH", or "sandy silt, ML" (see Fig. 1a and Fig. 1b). If the percentage of sand is equal to the percent of gravel, use "sandy."

15. Procedure for Identifying Coarse-Grained Soils

(Contains less than 50 % fines)

15.1 The soil is a *gravel* if the percentage of gravel is estimated to be more than the percentage of sand.

15.2 The soil is a *sand* if the percentage of gravel is estimated to be equal to or less than the percentage of sand.

15.3 The soil is a *clean gravel* or *clean sand* if the percentage of fines is estimated to be 5 % or less.

15.3.1 Identify the soil as a *well-graded gravel*, GW, or as a *well-graded sand*, SW, if it has a wide range of particle sizes and substantial amounts of the intermediate particle sizes.

15.3.2 Identify the soil as a *poorly graded gravel*, GP, or as a *poorly graded sand*, SP, if it consists predominantly of one size (uniformly graded), or it has a wide range of sizes with some intermediate sizes obviously missing (gap or skip graded).

15.4 The soil is either a *gravel with fines* or a *sand with fines* if the percentage of fines is estimated to be 15 % or more.

15.4.1 Identify the soil as a *clayey gravel*, GC, or a *clayey sand*, SC, if the fines are clayey as determined by the procedures in Section 14.

15.4.2 Identify the soil as a *silty gravel*, GM, or a *silty sand*, SM, if the fines are silty as determined by the procedures in Section 14.

15.5 If the soil is estimated to contain 10 % fines, give the soil a dual identification using two group symbols.

15.5.1 The first group symbol shall correspond to a clean gravel or sand (GW, GP, SW, SP) and the second symbol shall correspond to a gravel or sand with fines (GC, GM, SC, SM).

15.5.2 The group name shall correspond to the first group symbol plus the words "with clay" or "with silt" to indicate the plasticity characteristics of the fines. For example: "well-graded gravel with clay, GW-GC" or "poorly graded sand with silt, SP-SM" (see Fig. 2).

15.6 If the specimen is predominantly sand or gravel but contains an estimated 15 % or more of the other coarse-grained constituent, the words "with gravel" or "with sand" shall be added to the group name. For example: "poorly graded gravel with sand, GP" or "clayey sand with gravel, SC" (see Fig. 2).

15.7 If the field sample contains any cobbles or boulders, or both, the words "with cobbles" or "with cobbles and boulders" shall be added to the group name. For example: "silty gravel with cobbles, GM."

16. Report

16.1 The report shall include the information as to origin, and the items indicated in Table 13.

NOTE 14—*Example: Clayey Gravel with Sand and Cobbles, GC*—About 50 % fine to coarse, subrounded to subangular gravel; about 30 % fine to coarse, subrounded sand; about 20 % fines with medium plasticity, high dry strength, no dilatancy, medium toughness; weak reaction with HCl; original field sample had about 5 % (by volume) subrounded cobbles, maximum dimension, 150 mm.

In-Place Conditions—Firm, homogeneous, dry, brown

Geologic Interpretation—Alluvial fan

NOTE 15—Other examples of soil descriptions and identification are given in Appendix X1 and Appendix X2.

NOTE 16—If desired, the percentages of gravel, sand, and fines may be stated in terms indicating a range of percentages, as follows:

Trace—Particles are present but estimated to be less than 5 %
Few—5 to 10 %
Little—15 to 25 %
Some—30 to 45 %
Mostly—50 to 100 %

TABLE 13 Checklist for Description of Soils

1. Group name
2. Group symbol
3. Percent of cobbles or boulders, or both (by volume)
4. Percent of gravel, sand, or fines, or all three (by dry weight)
5. Particle-size range:
   Gravel—fine, coarse
   Sand—fine, medium, coarse
6. Particle angularity: angular, subangular, subrounded, rounded
7. Particle shape: (if appropriate) flat, elongated, flat and elongated
8. Maximum particle size or dimension
9. Hardness of coarse sand and larger particles
10. Plasticity of fines: nonplastic, low, medium, high
11. Dry strength: none, low, medium, high, very high
12. Dilatancy: none, slow, rapid
13. Toughness: low, medium, high
14. Color (in moist condition)
15. Odor (mention only if organic or unusual)
16. Moisture: dry, moist, wet
17. Reaction with HCl: none, weak, strong

For intact samples:

18. Consistency (fine-grained soils only): very soft, soft, firm, hard, very hard
19. Structure: stratified, laminated, fissured, slickensided, lensed, homogeneous
20. Cementation: weak, moderate, strong
21. Local name
22. Geologic interpretation
23. Additional comments: presence of roots or root holes, presence of mica, gypsum, etc., surface coatings on coarse-grained particles, caving or sloughing of auger hole or trench sides, difficulty in augering or excavating, etc.

Copyright ASTM International
Reproduced by IHS under license with ASTM
No reproduction or networking permitted without license from IHS

Licensee=CH2M Hill/5960458001, User=Carter, Lisa
Not for Resale, 08/04/2005 08:22:59 MDT

16.2 If, in the soil description, the soil is identified using a classification group symbol and name as described in Test Method D 2487, it must be distinctly and clearly stated in log forms, summary tables, reports, and the like, that the symbol and name are based on visual-manual procedures.

17. Precision and Bias

17.1 This practice provides qualitative information only, therefore, a precision and bias statement is not applicable.

18. Keywords

18.1 classification; clay; gravel; organic soils; sand; silt; soil classification; soil description; visual classification

APPENDIXES

(Nonmandatory Information)

X1. EXAMPLES OF VISUAL SOIL DESCRIPTIONS

X1.1 The following examples show how the information required in 16.1 can be reported. The information that is included in descriptions should be based on individual circumstances and need.

X1.1.1 *Well-Graded Gravel with Sand (GW)*—About 75 % fine to coarse, hard, subangular gravel; about 25 % fine to coarse, hard, subangular sand; trace of fines; maximum size, 75 mm, brown, dry; no reaction with HCl.

X1.1.2 *Silty Sand with Gravel (SM)*—About 60 % predominantly fine sand; about 25 % silty fines with low plasticity, low dry strength, rapid dilatancy, and low toughness; about 15 % fine, hard, subrounded gravel, a few gravel-size particles fractured with hammer blow; maximum size, 25 mm; no reaction with HCl (Note—Field sample size smaller than recommended).

In-Place Conditions—Firm, stratified and contains lenses of silt 1 to 2 in. (25 to 50 mm) thick, moist, brown to gray; in-place density 106 lb/ft^3; in-place moisture 9 %.

X1.1.3 *Organic Soil (OL/OH)*—About 100 % fines with low plasticity, slow dilatancy, low dry strength, and low toughness; wet, dark brown, organic odor; weak reaction with HCl.

X1.1.4 *Silty Sand with Organic Fines (SM)*—About 75 % fine to coarse, hard, subangular reddish sand; about 25 % organic and silty dark brown nonplastic fines with no dry strength and slow dilatancy; wet; maximum size, coarse sand; weak reaction with HCl.

X1.1.5 *Poorly Graded Gravel with Silt, Sand, Cobbles and Boulders (GP-GM)*—About 75 % fine to coarse, hard, subrounded to subangular gravel; about 15 % fine, hard, subrounded to subangular sand; about 10 % silty nonplastic fines; moist, brown; no reaction with HCl; original field sample had about 5 % (by volume) hard, subrounded cobbles and a trace of hard, subrounded boulders, with a maximum dimension of 18 in. (450 mm).

X2. USING THE IDENTIFICATION PROCEDURE AS A DESCRIPTIVE SYSTEM FOR SHALE, CLAYSTONE, SHELLS, SLAG, CRUSHED ROCK, AND THE LIKE

X2.1 The identification procedure may be used as a descriptive system applied to materials that exist in-situ as shale, claystone, sandstone, siltstone, mudstone, etc., but convert to soils after field or laboratory processing (crushing, slaking, and the like).

X2.2 Materials such as shells, crushed rock, slag, and the like, should be identified as such. However, the procedures used in this practice for describing the particle size and plasticity characteristics may be used in the description of the material. If desired, an identification using a group name and symbol according to this practice may be assigned to aid in describing the material.

X2.3 The group symbol(s) and group names should be placed in quotation marks or noted with some type of distinguishing symbol. See examples.

X2.4 Examples of how group names and symbols can be incororated into a descriptive system for materials that are not naturally occurring soils are as follows:

X2.4.1 *Shale Chunks*—Retrieved as 2 to 4-in. (50 to 100-mm) pieces of shale from power auger hole, dry, brown, no reaction with HCl. After slaking in water for 24 h, material identified as "Sandy Lean Clay (CL)"; about 60 % fines with medium plasticity, high dry strength, no dilatancy, and medium toughness; about 35 % fine to medium, hard sand; about 5 % gravel-size pieces of shale.

X2.4.2 *Crushed Sandstone*—Product of commercial crushing operation; "Poorly Graded Sand with Silt (SP-SM)"; about 90 % fine to medium sand; about 10 % nonplastic fines; dry, reddish-brown, strong reaction with HCl.

X2.4.3 *Broken Shells*—About 60 % gravel-size broken shells; about 30 % sand and sand-size shell pieces; about 10 % fines; "Poorly Graded Gravel with Sand (GP)."

X2.4.4 *Crushed Rock*—Processed from gravel and cobbles in Pit No. 7; "Poorly Graded Gravel (GP)"; about 90 % fine, hard, angular gravel-size particles; about 10 % coarse, hard,

ight ASTM International
duced by IHS under license with ASTM
production or networking permitted without license from IHS

Licensee=CH2M Hill/5960458001, User=Carter, Lisa
Not for Resale, 08/04/2005 08:22:59 MDT

angular sand-size particles; dry, tan; no reaction with HCl.

X3. SUGGESTED PROCEDURE FOR USING A BORDERLINE SYMBOL FOR SOILS WITH TWO POSSIBLE IDENTIFICATIONS.

X3.1 Since this practice is based on estimates of particle size distribution and plasticity characteristics, it may be difficult to clearly identify the soil as belonging to one category. To indicate that the soil may fall into one of two possible basic groups, a borderline symbol may be used with the two symbols separated by a slash. For example: SC/CL or CL/CH.

X3.1.1 A borderline symbol may be used when the percentage of fines is estimated to be between 45 and 55 %. One symbol should be for a coarse-grained soil with fines and the other for a fine-grained soil. For example: GM/ML or CL/SC.

X3.1.2 A borderline symbol may be used when the percentage of sand and the percentage of gravel are estimated to be about the same. For example: GP/SP, SC/GC, GM/SM. It is practically impossible to have a soil that would have a borderline symbol of GW/SW.

X3.1.3 A borderline symbol may be used when the soil could be either well graded or poorly graded. For example: GW/GP, SW/SP.

X3.1.4 A borderline symbol may be used when the soil could either be a silt or a clay. For example: CL/ML, CH/MH, SC/SM.

X3.1.5 A borderline symbol may be used when a fine-grained soil has properties that indicate that it is at the boundary between a soil of low compressibility and a soil of high compressibility. For example: CL/CH, MH/ML.

X3.2 The order of the borderline symbols should reflect similarity to surrounding or adjacent soils. For example: soils in a borrow area have been identified as CH. One sample is considered to have a borderline symbol of CL and CH. To show similarity, the borderline symbol should be CH/CL.

X3.3 The group name for a soil with a borderline symbol should be the group name for the first symbol, except for:

CL/CH lean to fat clay
ML/CL clayey silt
CL/ML silty clay

X3.4 The use of a borderline symbol should not be used indiscriminately. Every effort shall be made to first place the soil into a single group.

X4. SUGGESTED PROCEDURES FOR ESTIMATING THE PERCENTAGES OF GRAVEL, SAND, AND FINES IN A SOIL SAMPLE

X4.1 *Jar Method*—The relative percentage of coarse- and fine-grained material may be estimated by thoroughly shaking a mixture of soil and water in a test tube or jar, and then allowing the mixture to settle. The coarse particles will fall to the bottom and successively finer particles will be deposited with increasing time; the sand sizes will fall out of suspension in 20 to 30 s. The relative proportions can be estimated from the relative volume of each size separate. This method should be correlated to particle-size laboratory determinations.

X4.2 *Visual Method*—Mentally visualize the gravel size particles placed in a sack (or other container) or sacks. Then, do the same with the sand size particles and the fines. Then, mentally compare the number of sacks to estimate the percentage of plus No. 4 sieve size and minus No. 4 sieve size present. The percentages of sand and fines in the minus sieve size No. 4 material can then be estimated from the wash test (X4.3).

X4.3 *Wash Test (for relative percentages of sand and fines)*—Select and moisten enough minus No. 4 sieve size material to form a 1-in (25-mm) cube of soil. Cut the cube in half, set one-half to the side, and place the other half in a small dish. Wash and decant the fines out of the material in the dish until the wash water is clear and then compare the two samples and estimate the percentage of sand and fines. Remember that the percentage is based on weight, not volume. However, the volume comparison will provide a reasonable indication of grain size percentages.

X4.3.1 While washing, it may be necessary to break down lumps of fines with the finger to get the correct percentages.

X5. ABBREVIATED SOIL CLASSIFICATION SYMBOLS

X5.1 In some cases, because of lack of space, an abbreviated system may be useful to indicate the soil classification symbol and name. Examples of such cases would be graphical logs, databases, tables, etc.

X5.2 This abbreviated system is not a substitute for the full name and descriptive information but can be used in supplementary presentations when the complete description is referenced.

X5.3 The abbreviated system should consist of the soil classification symbol based on this standard with appropriate lower case letter prefixes and suffixes as:

Prefix: Suffix:

Copyright ASTM International
Reproduced by IHS under license with ASTM
No reproduction or networking permitted without license from IHS

Licensee=CH2M Hill/5960458001, User=Carter, Lisa
Not for Resale, 08/04/2005 08:22:59 MDT

s = sandy	s = with sand
g = gravelly	g = with gravel
	c = with cobbles
	b = with boulders

X5.4 The soil classification symbol is to be enclosed in parenthesis. Some examples would be:

Group Symbol and Full Name	Abbreviated
CL, Sandy lean clay	s(CL)
SP-SM, Poorly graded sand with silt and gravel	(SP-SM)g
GP, poorly graded gravel with sand, cobbles, and boulders	(GP)scb
ML, gravelly silt with sand and cobbles	g(ML)sc

SUMMARY OF CHANGES

In accordance with Committee D18 policy, this section identifies the location of changes to this standard since the last edition (1993$^{\epsilon 1}$) that may impact the use of this standard.

(1) Added Practice D 3740 to Section 2.

(2) Added Note 5 under 5.7 and renumbered subsequent notes.

The American Society for Testing and Materials takes no position respecting the validity of any patent rights asserted in connection with any item mentioned in this standard. Users of this standard are expressly advised that determination of the validity of any such patent rights, and the risk of infringement of such rights, are entirely their own responsibility.

This standard is subject to revision at any time by the responsible technical committee and must be reviewed every five years and if not revised, either reapproved or withdrawn. Your comments are invited either for revision of this standard or for additional standards and should be addressed to ASTM Headquarters. Your comments will receive careful consideration at a meeting of the responsible technical committee, which you may attend. If you feel that your comments have not received a fair hearing you should make your views known to the ASTM Committee on Standards, at the address shown below.

This standard is copyrighted by ASTM, 100 Barr Harbor Drive, PO Box C700, West Conshohocken, PA 19428-2959, United States. Individual reprints (single or multiple copies) of this standard may be obtained by contacting ASTM at the above address or at 610-832-9585 (phone), 610-832-9555 (fax), or service@astm.org (e-mail); or through the ASTM website (www.astm.org).

Copyright ASTM International
Reproduced by IHS under license with ASTM
No reproduction or networking permitted without license from IHS

Licensee=CH2M Hill/5960458001, User=Carter, Lisa
Not for Resale, 08/04/2005 08:22:59 MDT

Table 1
EXAMPLE SOIL DESCRIPTIONS

POORLY GRADED SAND (SP), light brown, moist, loose, fine sand size

FAT CLAY (CH), dark gray, moist, stiff

SILT (ML), light greenish gray, wet, very loose, some mica, lacustrine

WELL-GRADED SAND WITH GRAVEL (SM), reddish brown, moist, dense, subangular gravel to 0.6 inches max

POORLY GRADED SAND WITH SILT (SP-SM), white, wet, medium dense

ORGANIC SOIL WITH SAND (OH), dark brown to black, wet, firm to stiff but spongy undisturbed, becomes soft and sticky when remolded, many fine roots, trace of mica

SILTY GRAVEL WITH SAND (GM), brownish red, moist, very dense, subrounded gravel to 1.2 inches max

INTERLAYERED SILT (60 percent) AND CLAY (40 percent): SILT WITH SAND (ML), medium greenish gray, nonplastic, sudden reaction to shaking, layers mostly 1.5 to 8.3 inches thick; LEAN CLAY (CL), dark gray, firm and brittle undisturbed, becomes very soft and sticky when remolded, layers 0.2 to 1.2 inches thick

SILTY SAND WITH GRAVEL (SM), light yellowish brown, moist, medium dense, weak gravel to 1.0 inches max, very few small particles of coal, fill

SANDY ELASTIC SILT (MH), very light gray to white, wet, stiff, weak calcareous cementation

LEAN CLAY WITH SAND (CL/MH), dark brownish gray, moist, stiff

WELL-GRADED GRAVEL WITH SILT (GW-GM), brown, moist, very dense, rounded gravel to 1.0 inches max

Table 2
CRITERIA FOR DESCRIBING MOISTURE CONDITION

Description	Criteria
Dry	Absence of moisture, dusty, dry to the touch
Moist	Damp, but no visible water
Wet	Visible free water, usually soil is below water table

Table 3
RELATIVE DENSITY OF COARSE-GRAINED SOIL
(Developed from Sowers, 1979)

Blows/Ft	Relative Density	Field Test
0-4	Very loose	Easily penetrated with ½-in. steel rod pushed by hand
5-10	Loose	Easily penetrated with ½-in. steel rod pushed by hand
11-30	Medium	Easily penetrated with ½-in. steel rod driven with 5-lb hammer
31-50	Dense	Penetrated a foot with ½-in. steel rod driven with 5-lb hammer
>50	Very dense	Penetrated only a few inches with ½-in. steel rod driven with 5-lb hammer

Table 4
CONSISTENCY OF FINE-GRAINED SOIL
(Developed from Sowers, 1979)

Blows/Ft	Consistency	Pocket Penetrometer (TSF)	Torvane (TSF)	Field Test
<2	Very soft	<0.25	<0.12	Easily penetrated several inches by fist
2-4	Soft	0.25-0.50	0.12-0.25	Easily penetrated several inches by thumb
5-8	Firm	0.50-1.0	0.25-0.5	Can be penetrated several inches by thumb with moderate effort
9-15	Stiff	1.0-2.0	0.5-1.0	Readily indented by thumb, but penetrated only with great effort
16-30	Very stiff	2.0-4.0	1.0-2.0	Readily indented by thumbnail
>30	Hard	>4.0	>2.0	Indented with difficulty by thumbnail

STANDARD OPERATING PROCEDURE

Packaging and Shipping Procedures for Low-Concentration Samples

I. Purpose and Scope

The purpose of this guideline is to describe the packaging and shipping of low-concentration samples of various media to a laboratory for analysis.

II. Scope

The guideline only discusses the packaging and shipping of samples that are anticipated to have low concentrations of chemical constituents. Whether or not samples should be classified as low-concentration or otherwise will depend upon the site history, observation of the samples in the field, odor, and photoionization-detector readings.

If the site is known to have produced high-concentration samples in the past or the sampler suspects that high concentrations of contaminants might be present in the samples, then the sampler should conservatively assume that the samples cannot be classified as low-concentration. Samples that are anticipated to have medium to high concentrations of constituents should be packaged and shipped accordingly.

If warranted, procedures for dangerous-goods shipping may be implemented. Dangerous goods and hazardous materials pose an unreasonable risk to health, safety, or property during transportation without special handling. As a result only employees who are trained under CH2M HILL Dangerous Goods Shipping course may ship or transport dangerous goods. Employees should utilize the HAZMAT ShipRight tool on the Virtual Office and/or contact a designated CH2M HILL HazMat advisor with questions.

III. Equipment and Materials

- Coolers
- Clear tape
- “This Side Up” labels
- “Fragile” labels
- Vermiculite
- Ziplock bags or bubble wrap
- Ice
- Chain-of-Custody form (completed)
- Custody seals

IV. Procedures and Guidelines

Low-Concentration Samples

A. Prepare coolers for shipment:

- Tape drains shut.
- Affix "This Side Up" labels on all four sides and "Fragile" labels on at least two sides of each cooler.
- Place mailing label with laboratory address on top of coolers.
- Fill bottom of coolers with about 3 inches of vermiculite or absorbent pads.

B. Arrange decontaminated sample containers in groups by sample number. Consolidate VOC samples into one cooler to minimize the need for trip blanks.

C. Affix appropriate adhesive sample labels to each container. Protect with clear label protection tape.

D. Seal each sample bottle within a separate ziplock plastic bag or bubble wrap, if available. Tape the bag around bottle. Sample label should be visible through the bag.

E. Arrange sample bottles in coolers so that they do not touch.

F. If ice is required to preserve the samples, cubes should be repackaged in zip-lock bags and placed on and around the containers.

G. Fill remaining spaces with vermiculite or absorbent pads.

H. Complete and sign chain-of-custody form (or obtain signature) and indicate the time and date it was relinquished to Federal Express or the courier.

J Close lid and latch.

K. Carefully peel custody seals from backings and place intact over lid openings (right front and left back). Cover seals with clear protection tape.

L. Tape cooler shut on both ends, making several complete revolutions with strapping tape. Cover custody seals with tape to avoid seals being able to be peeled from the cooler.

M. Relinquish to Federal Express or to a courier arranged with the laboratory. Place airbill receipt inside the mailing envelope and send to the sample documentation coordinator along with the other documentation.

Medium- and High-Concentration Samples:

Medium- and high-concentration samples are packaged using the same techniques used to package low-concentration samples, with potential additional restrictions. If applicable, the sample handler must refer to instructions associated with the shipping of dangerous goods for the necessary procedures for shipping by Federal Express or other overnight carrier. If warranted, procedures for dangerous-goods shipping may be implemented. Dangerous goods and hazardous materials pose an unreasonable risk to health, safety, or property during transportation without special handling. As a result only employees who are trained under CH2M HILL Dangerous Goods Shipping course may ship or transport dangerous goods. Employees should utilize the HAZMAT ShipRight tool on the Virtual Office and/or contact a designated CH2M HILL HazMat advisor with questions.

V. Attachments

None.

VI. Key Checks and Items

- Be sure laboratory address is correct on the mailing label
- Pack sample bottles carefully, with adequate vermiculite or other packaging and without allowing bottles to touch
- Be sure there is adequate ice
- Include chain-of-custody form
- Include custody seals

STANDARD OPERATING PROCEDURE

Soil Sampling During Excavations

I. Purpose and Scope

The purpose of this procedure is to provide guidelines for obtaining samples of subsurface soils during excavations, soil stockpiles, and import fill sources using hand tools or heavy equipment.

II. Equipment and Materials

- Stainless-steel trowel, shovel, disposable plastic scoop, coring device, hand auger, or other appropriate hand tool
- Excavator with bucket
- Stainless-steel pan or bowl or disposable sealable bags
- Sample bottles

III. Procedures and Guidelines

Before sampling begins, equipment will be decontaminated using the procedures described in SOP *Decontamination of Drilling Rigs and Equipment*. The sampling point is located and recorded in the field logbook. Debris should be cleared from the sampling location.

A. Surface and Shallow Subsurface Sampling by Hand Methods

Either a shovel, post-hole digger, or trowel, will be used to remove soil immediately above the interval to be sampled. Once the desired sample interval is exposed, a decontaminated sampling tool (shovel, post-hole digger, trowel, disposable plastic scoop, etc) will be used to collect the sample. Soil that will be analyzed for semi-volatile organic compounds (SVOC) and inorganic analyses will be placed in a stainless steel sample bowl or disposable plastic scoop and will be homogenized using a stainless steel spoon or plastic disposable scoop. Procedures detailing the homogenization process are provided in SOP *Homogenization of Soil and Sediment Samples*. Note that during homogenization, pieces of gravel, asphalt, and metal should be removed as they do not make up the soil fraction of the sample and may produce erroneous results following chemical analysis. The homogenized sample will then be placed in the sample containers for chemical analysis. Soil samples that will be analyzed for volatile organic compounds (VOC) will not be composited, but will be placed directly into the sample containers for chemical analysis.

During sample collection, sampling personnel will also record the following

information in a bound field notebook:

- Lithology of the material encountered (including soil type, color, grain-size, moisture content, and a record of any foreign material encountered (concrete, asphalt, metal, plastic, etc.)
- Sampling interval,
- Date and time the sample was collected
- Results of screening measurements (i.e., photo ionization detector, etc.)
- Presence of odors or staining

Logbook entry procedures are described in detail in SOP *Preparing Field Log Books*.

B. Sampling Using Excavator Bucket

The following procedures will be used when collecting soil samples from the bucket of an excavator:

- Using an excavator bucket, scoop a volume of soil from the sampling location which is large enough to collect sample soil that did not come into direct contact with the surfaces of the bucket.
- Once the soil is removed, use a decontaminated trowel or shovel to remove the upper few inches of soil in the center of the bucket to expose a "fresh" sample. Once exposed use a decontaminated trowel, spoon, disposable plastic scoop, or shovel to collect a soil sample for chemical analysis. Samples collected for volatiles analysis should be placed directly into the sample containers. Material for samples for all other parameters should be removed to a decontaminated stainless steel bowl, tray, or disposable sealable bag. Samples that will be analyzed for SVOCs and inorganic will be homogenized as previously described in Section A above, and follow the procedures provided in SOP *Homogenization of Soil and Sediment Samples*.

Additionally, the logbook entry procedures summarized in Section A above and detailed in SOP *Preparing Field Log Books* will be followed during sample collection.

C. Stockpile and Import Fill Sampling

Procedure for Collecting Volatile Fractions

Using an auger, split spoon, or other device, retrieve a core from the stockpile or borrow source area to be sampled. Remove the core from the auger, split spoon, or other device and place the sample into a pre-preserved VOA vial or direct sample container such as an **En Core**® sampler or **Terra Core®** Sampler and seal the cap tightly. Ideally, the operation should be completed in one minute. After filling the required VOA vials, fill a 4-ounce jar with the remaining core sample. (This will be used by the laboratory to determine percent moisture.)

Label the vials and place on ice for shipment to the laboratory.

Procedure for Collecting Non-Volatile Samples

From five randomly selected sample locations, use a stainless steel spoon to collect equal amounts of soil for the required samples and place the soils into a stainless steel bowl or tray. The volume of soil collected should be sufficient to completely fill all sample containers requested by the laboratory. Homogenize the five samples by following the procedures provided in SOP *Homogenization of Soil and Sediment Samples*. Fill each required sample container with the required volume of homogenized soils. Complete the sample labels and place the sample containers on ice for shipment to the laboratory.

IV. Attachments

None

V. Key Checks and Preventative Maintenance

- Check that decontamination of equipment is thorough

Standard Operating Procedure

Locating and Clearing Underground Utilities

I. Purpose

The purpose of this SOP is to provide general guidelines and specific procedures that must be followed on Navy CLEAN projects for locating underground utilities and clearing dig locations in order to maximize our ability to avoid hitting underground utilities and to minimize liabilities to CH2M HILL and its subcontractors and health and safety risks to our project staff.

This SOP shall be used by Activity Managers and Project Managers to, in-turn, develop Activity-specific and project-specific utility location procedures. The activity and project-specific procedures will become part of work plans and project instructions and will be used to prepare scopes of work (SOWs) for the procurement of utility location subcontractors to meet the needs of individual projects.

This SOP also identifies the types of utility locating services that are available from subcontractors and the various tools that are used to locate utilities, and discusses when each type of service and tool may or may not be applicable.

II. Scope

Depending on the Navy/Marine Activity we typically find ourselves in one of two scenarios:

Scenario 1

The Activity provides utility locating (or dig clearance) services through the public works department or similar organization, or has a contract with an outside utility clearance service. Some of these services are provided in the form of dig permits which are required before you can dig or drill. In other cases no official permit is required and the process is somewhat vague.

Scenario 2

The Activity does not get involved in any utility locating processes aside from possibly providing the most recent utility maps, and relies on CH2M HILL to clear the dig locations.

Table 1 provides an up to date summary of which scenarios apply to the various primary Activities served under the Navy CLEAN program.

Scenario 1 is preferred because under this scenario the Navy tends to assume the responsibility if the location is improperly cleared, a utility is struck, and property damage results. However, our experience has been that the clearance services provided

by the Navy do not meet the standards that we consider to be adequate, in that they often simply rely on available base maps to mark utilities and do not verify locations using field geophysics. And if they do use locating tools, they do not provide adequate documentation or marking to confirm that a location has been cleared. So while the Navy's process may protect us from liability for property damage, it does not adequately protect our staff and subcontractors from health risks nor does it compensate us for down time, should a utility be hit.

Therefore, regardless of what services the Navy provides, in most cases we still need to supplement this effort with clearance services from our own third party utility location subcontractor following the procedures and guideline outlined in Section IV of this SOP. The cost implications of providing this service will range from $500 to several $1,000 depending on the size of the project.

The scope of services that we ask our subcontractors to provide can involve utility marking/mapping or the clearing of individual dig locations. In the former we ask our subs to mark all utilities within a "site" and often ask them to prepare a map based on their work. In the later, we ask them to clear (identify if there are any utilities within) a certain radius of a proposed dig/drill location.

The appropriate requested scope of services for a project will depend on the project. Clearing individual boreholes is often less expensive and allows the sub to concentrate their efforts on a limited area. However if the scope of the investigation is fluid (all borehole locations are not predetermined) it may be best to mark and map an entire site or keep the subcontractor on call.

Clearance of individual dig locations should be done to a minimum 20 foot radius around the location.

An example SOW for a utility subcontractor procurement is provided in Attachment A.

III. Services and Equipment

This section provides a general description of the services available to help us locate subsurface utilities and describes the types of equipment that these services may (or may not) use to perform their work. It identifies the capabilities of each type of equipment to help the PM specify what they should require from our utility location subs.

Services

The services that are available to us for identifying and marking underground utilities are:

- The local public/private utility-run service such as Miss Utility
- Utility location subcontractors (hired by us)

Attachment B provides a detailed description of each type of organization. It also provides contact numbers and web sites for the various Miss-Utility-type organizations in the areas where we do work for the Navy and contacts and services provided by several subcontractors that we have used or spoken to in the past.

Equipment

Attachment C provides a summary of the various types of equipment used for subsurface utility location. It describes the capabilities and limitations of each in order to help the PM determine if the equipment being used by a subcontractor is adequate.

It is important to make the potential subcontractors aware of the possible types of utilities (and utility materials) that are at the site, and to have them explain in their bid what types of equipment they will use to locate utilities /clear dig locations, and what the limitations of these equipment are.

A list of in-house experts that can be used to help you evaluate bids or answer questions you may have is provided in **Appendix C.**

IV. Procedures and Guidelines

This section presents specific procedures to be followed for the utility location work to be conducted by CH2M HILL and our subcontractors. In addition, a PM will have to follow the procedures required by the Activity to obtain their approvals, clearances and dig permits where necessary. These "dig permit" requirements vary by Activity and must be added to the project-specific SOP, or project instructions. It is preferable that the Activity perform their clearance processes before we follow up with our clearance work.

Activity Notification and Dig Permit Procedures

Identify Activity-specific permit and/or procedural requirements for excavation and drilling activities. Contact the Base Civil Engineer and obtain the appropriate form to begin the clearance process.

Activity Specific: To be provided by Activity or Project Manager

CH2M HILL Utility Clearance Procedures

Do not begin subsurface construction activities (e.g., trenching, excavation, drilling, etc.) until a check for underground utilities and similar obstructions has been conducted by CH2M HILL as a follow-up to the services provided by the Navy. The use of as-built drawings and utility company searches must be supplemented with a geophysical or other survey by a qualified, independent survey contractor (subcontracted to CH2M HILL) to identify additional and undiscovered buried utilities.

Examples of the type of geophysical technologies include (these are further described in Attachment C):

- **Ground Penetrating Radar (GPR),** which can detect pipes, including gas pipes, tanks, conduits, cables etc, both metallic and non-metallic at depths up to 30 feet depending on equipment. Sensitivity for both minimum object size and maximum depth detectable depends on equipment selected, soil conditions, etc.
- **Radio Frequency (RF),** involves inducing an RF signal in the pipe or cable and using a receiver to trace it. Some electric and telephone lines emit RF naturally and can be

detected without an induced signal. This method requires knowing where the conductive utility can be accessed to induce RF field if necessary.

- **Dual RF**, a modified version of RF detection using multiple frequencies to enhance sensitivity but with similar limitations to RF
- **Ferromagnetic Detectors**, are metal detectors that will detect ferrous and non-ferrous utilities. Sensitivity is limited, e.g. a 100 mm iron disk to a depth of about one meter or a 25 mm steel paper clip to a depth of about 20 cm.
- **Electronic markers,** are emerging technologies that impart a unique electronic signature to materials such as polyethylene pipe to facilitate location and tracing after installation. Promising for future installations but not of help for most existing utilities already in place.

The following procedures shall be used to identify and mark underground utilities during subsurface construction activities on the project:

- Contact utility companies or the state/regional utility protection service (such as Miss Utility) at least two (2) working days prior to intrusive activities to advise of the proposed work, and ask them to establish the location of the utility underground installations prior to the start of actual excavation: this is a law. These services will only mark the location of public-utility-owned lines and not Navy-owned utilities. In many cases there will not be any public-utility-owned lines on the Activity. There may also be Base-access issues to overcome.
- Procure and schedule the independent survey.
- The survey contractor shall determine the most appropriate geophysical technique or combinations of techniques to identify the buried utilities on the project site, based on the survey contractor's experience and expertise, types of utilities anticipated to be present and specific site conditions. ***The types of utilities must be provided to the bidding subcontractors in the SOW and procedures to be used must be specified by the bidder in their bid. It is extremely helpful to provide the sub with utility maps, with the caveat that all utilities are not necessarily depicted.***
- The survey subcontractor shall employ the same geophysical techniques used to identify the buried utilities, to survey the proposed path of subsurface investigation/construction work to confirm no buried utilities are present.
- Obtain utility clearances for subsurface work on both public and private property.
- Clearances provided by both the "Miss Utility" service and the CH2M HILL-subcontracted service are to be in writing, signed by the party conducting the clearance. The Miss Utility service will have standard notification forms/letters which typically simply state that they have been to the site and have done their work. The CH2M HILL subcontractor shall be required to fill out the form provided in Attachment D (this can be modified for a particular project) indicating that each dig/drill location has been addressed. ***This documentation requirement (with a copy of the form) needs to be provided in the subcontractor SOW.***

- Marking shall be done using the color coding presented in Attachment E. The type of material used for marking must be approved by the Activity prior to marking. Some base commanders have particular issues with persistent spray paint on their sidewalks and streets. ***Any particular marking requirements need to be provided in the subcontractor SOW.***
- Protect and preserve the markings of approximate locations of facilities until the markings are no longer required for safe and proper excavations. If the markings of utility locations are destroyed or removed before excavation commences or is completed, the Project Manager must notify the utility company or utility protection service to inform them that the markings have been destroyed.
- Perform a field check prior to drilling/digging (preferably while the utility location sub is still at the site) to see if field utility markings coincide with locations on utility maps. Look for fire hydrants, valves, manholes, light poles, lighted signs, etc to see if they coincide with utilities identified by the subcontractor.
- Underground utility locations must be physically verified (or dig locations must be physically cleared) by hand digging using wood or fiberglass-handled tools, air knifing, or by some other acceptable means approved by CH2M HILL, when the dig location (e.g. mechanical drilling, excavating) is expected to be within 5 feet of a marked underground system. Hand clearance shall be done to a depth of four feet unless a utility cross-section is available that indicates the utility is at a greater depth. In that event, the hand clearance shall proceed until the documented depth of the utility is reached.
- Conduct a site briefing for employees at the start of the intrusive work regarding the hazards associated with working near the utilities and the means by which the operation will maintain a safe working environment. Detail the method used to isolate the utility and the hazards presented by breaching the isolation.
- Monitor for signs of utilities during advancement of intrusive work (e.g., sudden change in advancement of auger or split spoon during drilling or change in color, texture or density during excavation that could indicate the ground has been previously disturbed).

IV. Attachments

A- Example SOW for Utility Location Subcontractor Procurement
B - Services Available for Identifying and Marking Underground Utilities
C – Equipment Used for Identifying Underground Utilities
D – Utility Clearance Documentation Form
E – Utility Marking Color Codes

Attachment A – Example SOW for Subcontracting Underground Utilities Locating Services

CTO-XXX

Scope of Work

Subsurface Utility Locating

Site XX

Navy Activity

City, State

A licensed and insured utility locator will be subcontracted to identify and mark out subsurface utilities for an environmental investigation/remediation project at Site XX of <<insert name of base, city, and state>>. The subcontractor will need to be available beginning at <<insert time>> on <<insert date>>. It is estimated that the work can be completed within XX days.

Proposed Scope of Work

The subcontractor will identify and mark all subsurface utilities (CHOOSE 1) that lie within a radius of 20 feet of each of XX sampling locations at Site XX shown on the attached Figure 1; (OR) that lie within the bounds of Site XX as delineated on the attached Figure 1. (If multiple sites are to be cleared, provide maps of each site with sample locations or clearance boundaries clearly delineated and a scale provided.)

Utilities will be identified using all reasonably available as-built drawings, electronic locating devices, and any other means necessary to maintain the safety of drilling and sampling personnel and the protection of the base infrastructure. The location of utilities identified from as-built drawings or other maps must be verified in the field prior to marking.

Base utility drawings for the Site(s) (CHOOSE 1) can be found at <<insert specific department and address or phone number on the base>> and should be reviewed by the subcontractor and referenced as part of the utility locating. (OR), will be provided to the subcontractor by CH2M HILL upon the award of the subcontract. (OR), are not available. Utility drawings shall not be considered definitive and must be field verified.

Field verification will include detection using nonintrusive subsurface detection equipment (magnetometers, GPR, etc) as well as opening manhole covers to verify pipe directions. As part of the bid, the Subcontractor shall provide a list of the various subsurface investigation tools they propose to have available and use at the site and what the limitations are of each tool.

A CH2M HILL representative shall be present to coordinate utility clearance activities and identify points and features to be cleared.

Field Marking and Documentation

All utilities located within **(CHOOSE 1)** ***a 20-ft radius of the XX proposed soil boring locations*** **(OR)** ***within the boundary of the site(s)*** as identified on the attached figure(s) will be marked using **paint** ***(some Bases such as the WNY may have restrictions on the use of permanent paint)*** and/or pin flags color coded to indicate electricity, gas, water, steam, telephone, TV cable, fiber optic, sewer, etc. The color coding shall match the industry standard as described on the attached form. In addition, the ***Buried Utility Location Tracking Form*** (attached) will be completed by the Subcontractor based upon what is identified in the field during the utility locating and submitted back to CH2M HILL (field staff or project manager) within 24 hours of completing the utility locating activities.

(OPTIONAL) ***The subcontractor shall also provide a map (or hand sketch) of the identified utilities to the Engineer within XX days of field demobilization. The map shall include coordinates or ties from fixed surface features to each identified subsurface utility.***

Bid Sheet/Payment Units

The subcontractor will bid on a time and materials basis for time spent on site and researching utility maps. Mobilization (including daily travel to the site) should be bid as a lump sum, as well as the preparation of the AHA and any required mapping. The per diem line item should be used if the field crew will require overnight accommodations at the project site.

Health and Safety Requirements

The utility locating subcontractor is to provide and assume responsibility for an adequate corporate Health and Safety Plan for onsite personnel. Standard personal safety equipment including: hard hat, safety glasses, steel-toed boots, gloves are recommended for all project activities. Specific health and safety requirements will be established by the Subcontractor for each project. The health and safety requirements will be subject to the review of CH2M HILL.

The subcontractor shall also prepare and provide to the Engineer, at least 48 hours prior to mobilization, an acceptable Activity Hazard Analysis (AHA) using the attached AHA form or similar.

It is also required that all subcontractor personnel who will be on site attend the daily 15-minute health and safety tailgate meeting at the start of each day in the field.

Subcontractor personnel showing indications of being under the influence of alcohol or illegal drugs will be sent off the job site and their employers will be notified. Subcontractor personnel under the influence of prescription or over-the-counter medication that may impair their ability to operate equipment will not be permitted to do so. It is expected that the subcontractor will assign them other work and provide a capable replacement (if necessary) to operate the equipment to continue work.

Security

The work will be performed on US Navy property. CH2M HILL will identify the Subcontractor personnel who will perform the work to the appropriate Navy facility point-of-contact, and will identify the Navy point-of-contact to the Subcontractor crew. The Subcontractor bears final responsibility for coordinating access of his personnel onto Navy property to perform required work. This responsibility includes arranging logistics and providing to CH2M HILL, in advance or at time of entry as specified, any required identification information for the Subcontractor personnel. Specifically, the following information should be submitted with the bid package for all personnel that will perform the work in question (this information is required to obtain a base pass):

- Name
- Birth Place
- Birth Date
- Social Security Number
- Drivers License State and Number
- Citizenship

Please be advised that no weapons, alcohol, or drugs will be permitted on the Navy facility at any time. If any such items are found, they will be confiscated, and the Subcontractor will be dismissed.

Quality Assurance

The Subcontractor will be licensed and insured to operate in the State of <<state>> and will comply with all applicable federal, state, county and local laws and regulations. The subcontractor will maintain, calibrate, and operate all electronic locating instruments in accordance with the manufacturer's recommendations. Additionally, the Subcontractor shall make all reasonable efforts to review as-built engineering drawings maintained by Base personnel, and shall notify the CH2M HILL Project Manager in writing (email is acceptable) whenever such documentation was not available or could not be reviewed.

Subcontractor Standby Time

At certain periods during the utility locating activities, the Subcontractor's personnel may be asked to stop work and standby when work may normally occur. During such times, the Subcontractor will cease activities until directed by the CH2M HILL representative to resume operations. Subcontractor standby time also will include potential delays caused by the CH2M HILL representative not arriving at the site by the agreed-upon meeting time for start of the work day. Standby will be paid to the

Subcontractor at the hourly rate specified in the Subcontractor's Bid Form attached to these specifications.

Cumulative Subcontractor standby will be accrued in increments no shorter than 15 minutes (i.e., an individual standby episode of less than 15 minutes is not chargeable).

During periods for which standby time is paid, the surveying equipment will not be demobilized and the team will remain at the site. At the conclusion of each day, the daily logs for the Subcontractor and CH2M HILL representative will indicate the amount of standby time incurred by the Subcontractor, if any. Payment will be made only for standby time recorded on CH2M HILL's daily logs.

Down Time

Should equipment furnished by the Subcontractor malfunction, preventing the effective and efficient prosecution of the work, or inclement weather conditions prevent safe and effective work from occurring, down time will be indicated in the Subcontractor's and CH2M Hill representative's daily logs. No payment will be made for down time.

Schedule

It is anticipated that the subsurface utility locating activities will occur on <<insert date>>. It is estimated that the above scope will be completed within XXX days.

Attachment B - Services Available for Identifying and Marking Underground Utilities

The services that are available to us for identifying and marking underground utilities are:

- The Activity's PWC (or similar organization)
- The local public/private utility -run service such as Miss Utility
- Utility location subcontractors (hired by CH2M HILL)

Each are discussed below.

Navy Public Works Department

A Public Works Department (PWD) is usually present at each Activity. The PWD is responsible for maintaining the public works at the base including management of utilities. In many cases, the PWD has a written permit process in place to identify and mark-out the locations of Navy-owned utilities [Note: The PWD is usually NOT responsible for the locations/mark-outs of non-Navy owned, public utilities (e.g., Washington Gas, Virginia Power, municipal water and sewer, etc.). Therefore, it is likely that we will have to contact other organizations besides the PWD in order to identify non-Navy owned, public utilities].

At some Activities, there may not be a PWD, the PWD may not have a written permit process in place, or the PWD may not take responsibility for utility locating and mark-outs. In these cases, the PWD should still be contacted since it is likely that they will have the best understanding of the utility locations at the Activity (i.e., engineering drawings, institutional knowledge, etc.). Subsequently, the PWD should be brought into a cooperative arrangement (if possible) with the other services employed in utility locating and mark-out in order to have the most comprehensive assessment performed.

At all Activities we should have a contact (name and phone number), and preferably an established relationship, with PWD, either directly or through the NAVFAC Atlantic, Midlant, or Washington NTR or Activity Environmental Office that we can work with and contact in the event of problems.

Miss Utility or "One Call" Services for Public Utility Mark-outs

Miss Utility or "One Call" service centers are information exchange centers for excavators, contractors and property owners planning any kind of excavation or digging. The "One Call" center notifies participating public utilities of the upcoming excavation work so they can locate and mark their underground utilities in advance to prevent possible damage to underground utility lines, injury, property damage and service outages. In some instances, such with southeastern Virginia bases, the Navy has entered into agreement with Ms. Utilities and is part of the response process for Miss

Utilities. Generally, a minimum of 48 hours is required for the public utility mark-outs to be performed. The "One Call" services are free to the public. Note that the "One Call" centers only coordinate with participating public utilities. There may be some public utilities that do NOT participate in the "One Call" center which may need to be contacted separately. For example, in Washington, DC, the Miss Utility "One Call" center does not locate and mark public sewer and water lines. Therefore, the municipal water and sewer authority must be contacted separately to have the sewer and water lines marked out. The AM should contact the appropriate one-call center to determine their scope of services.

For the Mid-Atlantic region, the following "One Call" service centers are available.

Name	Phone	Website	Comments
Miss Utility of DELMARVA	800-257-7777	www.missutility.net	Public utility mark-outs in Delaware, Maryland, Washington, DC, and Northern Virginia
Miss Utility of Southern Virginia (One Call)	800-552-7001	not available	Public utility mark-outs in Southern Virginia
Miss Utility of Virginia	800-257-7777 800-552-7007	www.missutilityofvirginia.com	General information on public utility mark-outs in Virginia, with links to Miss Utility of DELMARVA and Miss Utility of Southern Virginia (One Call)
Miss Utility of West Virginia, Inc	800-245-4848	none	Call to determine what utilities they work with in West Virginia
North Carolina One Call Center	800-632-4949	www.ncocc.org/ncocc/default.htm	Public Utility Markouts in North Carolina

Private Subcontractors

1. Utility-locating support is required at some level for most all CH2M HILL field projects in "clearing" proposed subsurface boring locations on the project site. Utility location and sample clearance can include a comprehensive effort of GIS map interpretation, professional land surveying, field locating, and geophysical surveying. Since we can usually provide our own GIS-related services for projects and our professional land surveying services are normally procured separately, utility-locating subcontractors will normally only be required for some level of geophysical surveying support in the field. This level of geophysical surveying support can range widely from a simple electromagnetic (EM) survey over a known utility line, to a blind geophysical effort, including a ground-penetrating radar (GPR) survey and/or a comprehensive EM survey to delineate and characterize all unknown subsurface anomalies.

   The level of service required from the subcontractor will vary depending on the nature of the site. At sites where utility locations are well defined on the maps and recent construction is limited, CH2M HILL may be confident with a limited effort from a traditional utility-locating subcontractor providing a simple EM survey. At

sites where utility locations are not well defined, where recent constructions may have altered utility locations, or the nature of the site makes utility location difficult, CH2M HILL will require the services of a comprehensive geophysical surveying subcontractor, with a wide range of GPR and EM services available for use on an "as-needed" basis. Typical costs for geophysical surveying subcontractors will range from approximately $200 per day for a simple EM effort (usually one crew member and one instrument) to approximately $1,500 per day for a comprehensive geophysical surveying effort (usually a two-person crew and multiple instruments). Comprehensive geophysical surveying efforts may also include field data interpretation (and subsequent report preparation) and non-destructive excavation to field-verify utility depths and locations.

The following table provides a list of recommended geophysical surveying support subcontractors that can be used for utility-locating services:

Company Name and Address	Contact Name and Phone Number	Equipment[1]					Other Services[2]		
		1	2	3	4	5	A	B	C
US Radar, Inc.* PO Box 319 Matawan, NJ 07747	Ron LaBarca 732-566-2035			4					
Utilities Search, Inc.*	Jim Davis 703-369-5758	4				4	4	4	4
So Deep, Inc.* 8397 Euclid Avenue Manassas Park, VA 20111	703-361-6005	4					4	4	4
Accurate Locating, Inc. 1327 Ashton Rd., Suite 101 Hanover, MD 21076	Ken Shipley 410-850-0280	4	4						
NAEVA Geophysics, Inc. P.O. Box 7325 Charlottesville, VA 22906	Alan Mazurowski 434-978-3187	4	4	4	4	4	4	4	4
Earth Resources Technology. Inc. 8106 Stayton Rd. Jessup, MD 20794	Peter Li 240-554-0161	4	4	4	4	4	4	4	
Geophex, Ltd 605 Mercury Street Raleigh, NC 27603	I. J. Won 919-839-8515	4	4	4	4	4	4	4	4

Notes:

*Companies denoted with an asterisk have demonstrated reluctance to assume responsibility for damage to underground utilities or an inability to accommodate the insurance requirements that CH2M HILL requests for this type of work at many Navy sites.

[1]Equipment types are:

1. Simple electromagnetic instruments, usually hand-held
2. Other, more innovative, electromagnetic instruments, including larger instruments for more area coverage
3. Ground-penetrating radar systems of all kinds
4. Audio-frequency detectors of all kinds
5. Radio-frequency detectors of all kinds

[2]Other services include:

A. Data interpretation and/or report preparation to provide a permanent record of the geophysical survey results and a professional interpretation of the findings, including expected accuracy and precision.

B. Non-destructive excavation to field-verify the depths, locations, and types of subsurface utilities.

C. Concrete/asphalt coring and pavement/surface restoration.

Attachment C – Equipment Used for Identifying Underground Utilities

This attachment provides a summary of the various types of equipment used for subsurface utility location. It describes the capabilities and limitations of each in order to help the AM and PM determine if the equipment being proposed by a subcontractor or Navy is adequate. A list of in-house experts that can be used to answer questions you may have is provided below.

CH2M HILL In-house Utility Location Experts

Tamir Klaff/WDC

Home Office Phone – 703-669-9611

Electromagnetic Induction (EMI) Methods

EMI instruments, in general, induce an electromagnetic field into the ground (the primary field) and then record the response (the secondary field), if any. Lateral changes in subsurface conductivity, such as caused by the presence of buried metal or by significant soil variations, cause changes in the secondary field recorded by the instrument and thus enable detection and mapping of the subsurface features. It should be noted that EMI only works for electrically conductive materials--plastic or PVC pipes are generally not detected with EMI. Water and gas lines are commonly plastic, although most new lines include a copper "locator" strip on the top of the PVC to allow for detection with EMI.

EMI technology encompasses a wide range of instruments, each with inherent strengths and weaknesses for particular applications. One major division of EMI is between "time-domain" and "frequency-domain" instruments that differ in the aspect of the secondary field they detect. Another difference in EMI instruments is the operating frequency they use to transmit the primary field. Audio- and radio-frequencies are often used for utility detection, although other frequencies are also used. Consideration of the type of utility expected, surface features that could interfere with detection, and the "congestion" of utilities in an area, should be made when choosing a particular EMI instrument for a particular site.

One common EMI tool used for utility location is a handheld unit that can be used to quickly scan an area for utilities and allows for marking locations in "real time". This method is most commonly used by "dig-safe" contractors marking out known utilities prior to excavation. It should be noted that this method works best when a signal (the primary field) can be placed directly onto the line (i.e., by clamping or otherwise connecting to the end of the line visible at the surface, or for larger utilities such as sewers, by running a transmitter through the utility). These types of tools also have a limited capability to scan an area for unknown utilities. Usually this requires having enough area to separate a hand held transmitter at least a hundred feet from the

receiver. Whether hunting for unknown, or confirming known, utilities, this method will only detect continuous lengths of metallic conductors.

In addition to the handheld EMI units, larger, more powerful EMI tools are available that provide more comprehensive detection and mapping of subsurface features. Generally, data with these methods are collected on a regular grid in the investigation area, and are then analyzed to locate linear anomalies that can be interpreted as utilities. These methods will usually detect *all* subsurface metal (above a minimum size), including pieces of abandoned utilities. In addition, in some situations, backfill can be detected against native soils giving information on trenching and possible utility location. Drawbacks to these methods are that the secondary signals from utilities are often swamped (i.e., undetectable) close to buildings and other cultural features, and that the subsurface at heavily built-up sites may be too complicated to confidently interpret completely.

Hand-held metal detectors (treasure-finders) are usually based on EMI technology. They can be used to locate shallow buried metal associated with utilities (e.g., junctions, manholes, metallic locators). Advantages of these tools is the ease of use and real-time marking of anomalies. Drawbacks include limited depths of investigations and no data storage capacity.

Ground Penetrating Radar (GPR)

GPR systems transmit radio and microwave frequency (e.g., 80 megaHertz to 1,000 megaHertz) waves into the ground and then record reflections of those waves coming back to the surface. Reflections of the radar waves typically occur at lithologic changes, subsurface discontinuities, and subsurface structures. Plastic and PVC pipes can sometimes be detected in GPR data, especially if they are shallow, large, and full of a contrasting material such as air in a wet soil, or water in a dry soil. GPR data are usually collected in regular patterns over an area and then analyzed for linear anomalies that can be interpreted as utilities. GPR is usually very accurate in x-y location of utilities, and can be calibrated at a site to give very accurate depth information as well. A significant drawback to GPR is that depth of investigation is highly dependant on background soil conductivity, and it will not work on all sites. It is not uncommon to get only 1-2 feet of penetration with the signal in damp, clayey environments. Another drawback to GPR is that sites containing significant fill material (e.g., concrete rubble, scrap metal, garbage) will result in complicated anomalies that are difficult or impossible to interpret.

Magnetic Field Methods

Magnetic field methods rely on detecting changes to the earth's magnetic field caused by ferrous metal objects. This method is usually more sensitive to magnetic metal (i.e., deeper detection) than EMI methods. A drawback to this method is it is more susceptible to being swamped by surface features such as fences and cars. In addition, procedures must usually be implemented that account for natural variations in the earth's background field as it changes throughout the day. One common use of the method is to measure and analyze the gradient of the magnetic field, which eliminates most of the drawbacks to the method. It should be noted this method only detects

ferrous metal, primarily iron and steel for utility location applications. Some utility detector combine magnetic and EMI methods into a single hand-held unit.

Optical Methods

Down the hole cameras may be useful in visually reviewing a pipe for empty conduits and/or vaults.

Attachment D – Utility Clearance Documentation Form

Attachment E – Utility Marking Color Codes

The following is the standard color code used by industry to mark various types of utilities and other features at a construction site.

White – Proposed excavations and borings

Pink – Temporary survey markings

Red – Electrical power lines, cables, conduits and lighting cables

Yellow – Gas, oil, steam, petroleum or gaseous materials

Orange – Communication, alarm or signal lines, cables, or conduits

Blue – Potable water

Purple – Reclaimed water, irrigation and slurry lines

Green – Sewer and storm drain lines

Buried Utility Location Tracking Form

(Submit to CH2M HILL PM within 24 hrs of location activities)

Project Location:
CH2M HILL Project No.:
CH2M HILL Project Manager: Name/Phone:
Fax:
Email:
CH2M HILL Field Team Leader: Name/Phone:

CH2M HILL Purchase Order:

Utility Location Subcontractor:
Subcontractor POC:

Dates of location activities:

Check each box using an "X" if a buried utility is present within 5 feet of a marked Station ID. If color of the flag or paint differs from listed color, note change in color on the form.

Station ID	Gas (Yellow)	Electric (Red)	Fiber optic (Orange)	Cable (Orange)	Water (Blue)	San. Sewer (Green)	Storm Sewer (Green)	Steam (Yellow)	Petroleum (Yellow)	Compressed air (Yellow)	Other ___	Other ___	Other ___	Other ___	Date completed	Technician initials	Notes (methods/tools used

The findings of the buried utility location activities summarized herein were conducted in strict accordance with the CH2M HILL scope of work.

Subcontractor's _____ Date _____

Signature

PMS 219

PMS 1795*

PMS 108

PMS 144*

13.5 parts process
2.5 parts reflex

PMS 253

PMS 3415

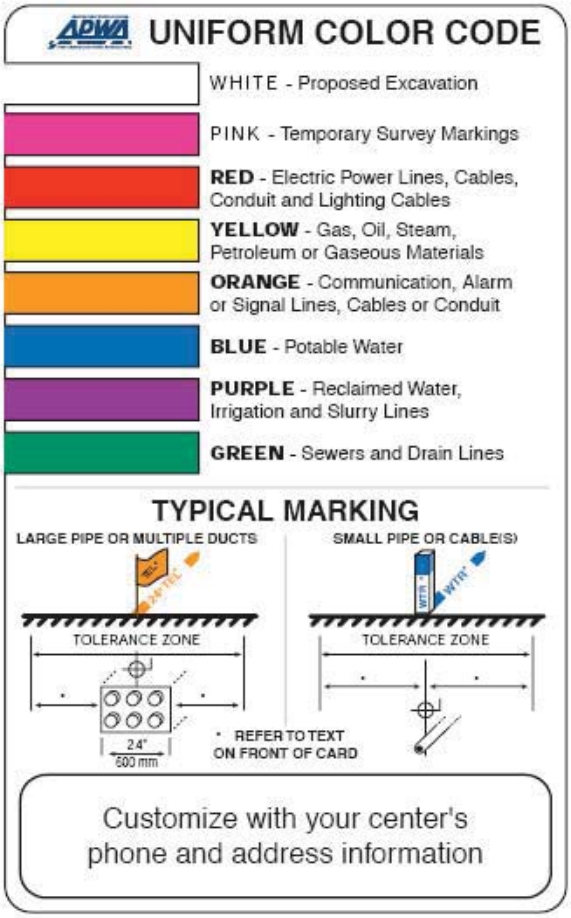

GUIDELINES FOR UNIFORM TEMPORARY MARKING OF UNDERGROUND FACILITIES

This marking guide provides for universal use and understanding of the temporary marking of subsurface facilities to prevent accidents and damage or service interruption by contractors, excavators, utility companies, municipalities or any others working on or near underground facilities.

ONE-CALL SYSTEMS
The One-Call damage prevention system shall be contacted prior to excavation.

PROPOSED EXCAVATION
Use white marks to show the location, route or boundary of proposed excavation. Surface marks on roadways do not exceed 1.5" by 18" (40 mm by 450 mm). The facility color and facility owner identity may be added to white flags or stakes.

USE OF TEMPORARY MARKING
Use color-coded surface marks (i.e., paint or chalk) to indicate the location or route of active and out-of-service buried lines. To increase visibility, color coded vertical markers (i.e., stakes or flags) should supplement surface marks. Marks and markers indicate the name, initials or logo of the company that owns or operates the line, and width of the facility if it is greater than 2" (50 mm). Marks placed by other than line owner/operator or its agent indicate the identity of the designating firm. Multiple lines in joint trench are marked in tandem. If the surface over the buried line is to be removed, supplementary offset markings are used. Offset markings are on a uniform alignment and clearly indicate the actual facility is a specific distance away.

TOLERANCE ZONE
Any excavation within the tolerance zone is performed with non-powered hand tools or non-invasive method until the marked facility is exposed. The width of the tolerance zone may be specified in law or code. If not, a tolerance zone including the width of the facility plus 18" (450 mm) measured horizontally from each side of the facility is recommended.

ADOPT UNIFORM COLOR CODE
The American Public Works Association encourages public agencies, utilities, contractors, other associations, manufacturers and all others involved in excavation to adopt the APWA Uniform Color Code, using ANSI standard Z535.1 Safety Colors for temporary marking and facility identification.

Rev. 4/99

Appendix B
Laboratory DoD ELAP Certifications

LABORATORY ACCREDITATION BUREAU®

Certificate of Accreditation

ISO/IEC 17025:2005 **Certificate Number L2223**

Katahdin Analytical Services, Inc.

600 Technology Way
Scarborough ME 04074

has met the requirements set forth in L-A-B's policies and procedures, all requirements of ISO/IEC 17025:2005 "General Requirements for the competence of Testing and Calibration Laboratories" and the U.S. Department of Defense Environmental Laboratory Accreditation Program (DoD ELAP).*

The accredited lab has demonstrated technical competence to a defined "Scope of Accreditation" and the operation of a laboratory quality management system (refer to joint ISO-ILAC-IAF Communiqué dated 8 January 2009).

Accreditation valid through: February 1, 2016

R. Douglas Leonard, Jr., President, COO
Laboratory Accreditation Bureau
Presented the 1st of February 2013

*See the laboratory's Scope of Accreditation for details of accredited parameters
**Laboratory Accreditation Bureau is found to be in compliance with ISO/IEC 17011:2004 and recognized by ILAC (International Laboratory Accreditation Cooperation) and NACLA (National Cooperation for Laboratory Accreditation).

LABORATORY ACCREDITATION BUREAU

Certificate # L2223

Scope of Accreditation For Katahdin Analytical Services, Inc.

600 Technology Way
Scarborough, ME 04074
Leslie Dimond
207-874-2400

In recognition of a successful assessment to ISO/IEC 17025:2005 and the requirements of the DoD Environmental Laboratory Accreditation Program (DoD ELAP) as detailed in the DoD Quality Systems Manual for Environmental Laboratories (DoD QSM v4.2) based on the National Environmental Laboratory Accreditation Conference Chapter 5 Quality Systems Standard (NELAC Voted Revision June 5, 2003), accreditation is granted to Katahdin Analytical Services to perform the following tests:

Accreditation granted through: February 1, 2016

Testing - Environmental

Non-Potable Water		
Technology	**Method**	**Analyte**
GC/ECD	EPA 8081B	2, 4`-DDD
GC/ECD	EPA 8081B	2, 4`-DDE
GC/ECD	EPA 8081B	2, 4`-DDT
GC/ECD	EPA 608; EPA 8081B	4, 4`-DDD
GC/ECD	EPA 608; EPA 8081B	4, 4`-DDE
GC/ECD	EPA 608; EPA 8081B	4, 4`-DDT
GC/ECD	EPA 608; EPA 8081B	Aldrin
GC/ECD	EPA 608; EPA 8081B	alpha-BHC (alpha-Hexachlorocyclohexane)
GC/ECD	EPA 8081B	Alpha-Chlordane
GC/ECD	EPA 608; EPA 8081B	beta-BHC (beta-Hexachlorocyclohexane)
GC/ECD	EPA 8081B	Cis-Nonaclor
GC/ECD	EPA 608; EPA 8081B	Chlordane (tech.)
GC/ECD	EPA 608; EPA 8081B	delta-BHC
GC/ECD	EPA 608; EPA 8081B	Dieldrin
GC/ECD	EPA 608; EPA 8081B	Endosulfan I
GC/ECD	EPA 608; EPA 8081B	Endosulfan II

Non-Potable Water		
Technology	**Method**	**Analyte**
GC/ECD	EPA 608; EPA 8081B	Endosulfan sulfate
GC/ECD	EPA 608; EPA 8081B	Endrin
GC/ECD	EPA 608; EPA 8081B	Endrin aldehyde
GC/ECD	EPA 8081B	Endrin Ketone
GC/ECD	EPA 8081B	gamma-BHC (Lindane gamma-Hexachlorocyclohexane)
GC/ECD	EPA 8081B	gamma-Chlordane
GC/ECD	EPA 608; EPA 8081B	Heptachlor
GC/ECD	EPA 608; EPA 8081B	Heptachlor epoxide
GC/ECD	EPA 8081B	Hexachlorobenzene
GC/ECD	EPA 8081B	Methoxychlor
GC/ECD	EPA 8081B	Mirex
GC/ECD	EPA 8081B	Oxychlordane
GC/ECD	EPA 608; EPA 8081B	Toxaphene (Chlorinated camphene)
GC/ECD	EPA 8081B	trans-Nonachlor
GC/ECD	EPA 608; EPA 8082A	Aroclor-1016 (PCB-1016)
GC/ECD	EPA 608; EPA 8082A	Aroclor-1221 (PCB-1221)
GC/ECD	EPA 608; EPA 8082A	Aroclor-1232 (PCB-1232)
GC/ECD	EPA 608; EPA 8082A	Aroclor-1242 (PCB-1242)
GC/ECD	EPA 608; EPA 8082A	Aroclor-1248 (PCB-1248)
GC/ECD	EPA 608; EPA 8082A	Aroclor-1254 (PCB-1254)
GC/ECD	EPA 608; EPA 8082A	Aroclor-1260 (PCB-1260)
GC/ECD	EPA 8082A MOD	Aroclor-1262 (PCB-1262)
GC/ECD	EPA 8082A MOD	Aroclor-1268 (PCB-1268)
GC/ECD	EPA 8082A	2,2',3,3',4,4',5,5',6-Nonachlorobiphenyl (BZ 206)
GC/ECD	EPA 8082A	2,2',3,3',4,4',5,6-Octachlorobiphenyl (BZ 195)
GC/ECD	EPA 8082A	2,2',3,3',4,4',5-Heptachlorobiphenyl (BZ 170)
GC/ECD	EPA 8082A	2,2',3,3',4,4'-Hexachlorobiphenyl (BZ 128)
GC/ECD	EPA 8082A	2, 2', 3, 4, 4', 5, 5'-Heptachlorobiphenyl (BZ 180)
GC/ECD	EPA 8082A	2, 2', 3, 4, 4', 5', 6-Heptachlorobiphenyl (BZ 183)
GC/ECD	EPA 8082A	2, 2', 3, 4, 4', 5-Hexachlorobiphenyl (BZ 138)
GC/ECD	EPA 8082A	2, 2', 3, 4, 4', 6, 6'-Heptachlorobiphenyl (BZ 184)

Non-Potable Water		
Technology	**Method**	**Analyte**
GC/ECD	EPA 8082A	2, 2', 3, 4', 5, 5', 6-Heptachlorobiphenyl (BZ 187)
GC/ECD	EPA 8082A	2, 2', 3, 4, 5'-Pentachlorobiphenyl (BZ 87)
GC/ECD	EPA 8082A	2, 2', 3, 5'-Tetrachlorobiphenyl (BZ 44)
GC/ECD	EPA 8082A	2, 2', 4, 4', 5, 5'-Hexachlorobiphenyl (BZ 153)
GC/ECD	EPA 8082A	2, 2', 4, 5, 5'-Pentachlorobiphenyl (BZ 101)
GC/ECD	EPA 8082A	2, 2', 4, 5-Tetrachlorobiphenyl (BZ 48)
GC/ECD	EPA 8082A	2, 2', 4, 5'-Tetrachlorobiphenyl (BZ 49)
GC/ECD	EPA 8082A	2, 2', 5, 5'-Tetrachlorobiphenyl (BZ 52)
GC/ECD	EPA 8082A	2, 2', 5-Trichlorobiphenyl (BZ 18)
GC/ECD	EPA 8082A	2, 3, 3', 4, 4', 5-Hexachlorobiphenyl (BZ 156)
GC/ECD	EPA 8082A	2, 3, 3', 4, 4', 5'-Hexachlorobiphenyl (BZ 157)
GC/ECD	EPA 8082A	2, 3, 3', 4, 4'-Pentachlorobiphenyl (BZ 105)
GC/ECD	EPA 8082A	2, 3, 3', 4, 4', 5, 5'-Heptachlorobiphenyl (BZ 189)
GC/ECD	EPA 8082A	2, 3', 4, 4', 5, 5'-Hexachlorobiphenyl (BZ 167)
GC/ECD	EPA 8082A	2, 3', 4, 4', 5-Pentachlorobiphenyl (BZ 118)
GC/ECD	EPA 8082A	2, 3', 4, 4',5'-Pentachlorobiphenyl (BZ 123)
GC/ECD	EPA 8082A	2, 3', 4, 4'-Tetrachlorobiphenyl (BZ 66)
GC/ECD	EPA 8082A	2, 3, 4, 4', 5-Pentachlorobiphenyl (BZ 114)
GC/ECD	EPA 8082A	2, 4, 4'-Trichlorobiphenyl (BZ 28)
GC/ECD	EPA 8082A	2, 4'-Dichlorobiphenyl (BZ 8)
GC/ECD	EPA 8082A	3, 3', 4, 4', 5, 5'-Hexachlorobiphenyl (BZ 169)
GC/ECD	EPA 8082A	3, 3', 4, 4', 5-Pentachlorobiphenyl (BZ 126)
GC/ECD	EPA 8082A	3, 3', 4, 4'-Tetrachlorobiphenyl (BZ 77)
GC/ECD	EPA 8082A	3, 4, 4', 5-Tetrachlorobiphenyl (BZ 81)
GC/ECD	EPA 8082A	Decachlorobiphenyl (BZ 209)
GC/ECD	EPA 8151A	2, 4, 5-T
GC/ECD	EPA 8151A	2, 4-D
GC/ECD	EPA 8151A	2, 4-DB
GC/ECD	EPA 8151A	Dalapon
GC/ECD	EPA 8151A	Dicamba
GC/ECD	EPA 8151A	Dichloroprop

Non-Potable Water		
Technology	**Method**	**Analyte**
GC/ECD	EPA 8151A	Dinoseb
GC/ECD	EPA 8151A	MCPA
GC/ECD	EPA 8151A	MCPP
GC/ECD	EPA 8151A	Pentachlorophenol
GC/ECD	EPA 8151A	Silvex (2, 4, 5-TP)
GC/FID	EPA 8015C/D MOD	Diesel range organics (DRO)
GC/FID	EPA 8015C/D MOD	Total Petroleum Hydrocarbon (TPH)
GC/FID	EPA 8015C/D MOD	Gasoline range organics (GRO)
GC/FID/PID	MA DEP VPH	Volatile Organic Hydrocarbons
GC/FID	MA DEP EPH	Extractable Petroleum Hydrocarbons
GC/FID	CT ETPH	Total Petroleum Hydrocarbons
GC/FID	TNRCC Method 1005	Total Petroleum Hydrocarbons
GC/FID	FL-PRO	Petroleum Range Organics
GC/ECD	EPA 8011; EPA 504	1, 2-Dibromoethane (EDB)
GC/ECD	EPA 8011; EPA 504	1, 2-Dibromo-3-chloropropane
GC/FID	RSK-175	Methane Ethane Ethene
GC/MS	EPA 8260B/C; EPA 524.2	1, 1, 1, 2-Tetrachloroethane
GC/MS	EPA 624; EPA 8260B/C; EPA 524.2	1, 1, 1-Trichloroethane
GC/MS	EPA 624; 8260B/C; EPA 524.2	1, 1, 2, 2-Tetrachloroethane
GC/MS	EPA 8260B/C	1,1,2-Trichloro-1,2,2-trifluoroethane
GC/MS	EPA 624; EPA 8260B/C; EPA 524.2	1, 1, 2-Trichloroethane
GC/MS	EPA 624; EPA 8260B/C; EPA 524.2	1, 1-Dichloroethane
GC/MS	EPA 624; EPA 8260B/C; EPA 524.2	1, 1-Dichloroethene
GC/MS	EPA 8260B/C; EPA 524.2	1, 1-Dichloropropene
GC/MS	EPA 8260B/C; EPA 524.2	1, 2, 3-Trichlorobenzene
GC/MS	EPA 8260B/C; EPA 524.2	1, 2, 3-Trichloropropane
GC/MS	EPA 8260B/C	1,2,3-Trimethylbenzene
GC/MS	EPA 8260B/C; EPA 524.2	1, 2, 4-Trichlorobenzene
GC/MS	EPA 8260B/C; EPA 524.2	1, 2, 4-Trimethylbenzene

Non-Potable Water		
Technology	**Method**	**Analyte**
GC/MS	EPA 8260B/C; EPA 524.2	1, 2-Dibromo-3-chloropropane
GC/MS	EPA 8260B/C; EPA 524.2	1, 2-Dibromoethane (EDB)
GC/MS	EPA 624; EPA 8260B/C; EPA 524.2	1, 2-Dichlorobenzene
GC/MS	EPA 624; EPA 8260B/C; EPA 524.2	1, 2-Dichloroethane
GC/MS	EPA 624; EPA 8260B/C; EPA 524.2	1, 2-Dichloropropane
GC/MS	EPA 8260B/C	1,3,5-Trichlorobenzene
GC/MS	EPA 8260B/C; EPA 524.2	1, 3, 5-Trimethylbenzene
GC/MS	EPA 624; EPA 8260B/C; EPA 524.2	1, 3-Dichlorobenzene
GC/MS	EPA 8260B/C; EPA 524.2	1, 3-Dichloropropane
GC/MS	EPA 624; EPA 8260B/C; EPA 524.2	1, 4-Dichlorobenzene
GC/MS	EPA 8260B/C	1, 4-Dioxane
GC/MS	EPA 8260B/C	1-Chlorohexane
GC/MS	EPA 8260B/C; EPA 524.2	2, 2-Dichloropropane
GC/MS	EPA 8260B/C; EPA 524.2	2-Butanone
GC/MS	EPA 624; EPA 8260B/C	2-Chloroethyl vinyl ether
GC/MS	EPA 8260B/C; EPA 524.2	2-Chlorotoluene
GC/MS	EPA 8260B/C; EPA 524.2	2-Hexanone
GC/MS	EPA 8260B/C; EPA 524.2	4-Chlorotoluene
GC/MS	EPA 8260B/C; EPA 524.2	4-Methyl-2-pentanone
GC/MS	EPA 8260B/C; EPA 524.2	Acetone
GC/MS	EPA 8260B/C	Acetonitrile
GC/MS	EPA 624; EPA 8260B/C	Acrolein
GC/MS	EPA 624; EPA 8260B/C; EPA 524.2	Acrylonitrile
GC/MS	EPA 8260B/C; EPA 524.2	Allyl chloride
GC/MS	EPA 624; EPA 8260B/C; EPA 524.2	Benzene
GC/MS	EPA 8260B/C	Benzyl chloride
GC/MS	EPA 8260B/C; EPA 524.2	Bromobenzene
GC/MS	EPA 8260B/C; EPA 524.2	Bromochloromethane

Non-Potable Water		
Technology	**Method**	**Analyte**
GC/MS	EPA 624; EPA 8260B/C; EPA 524.2	Bromodichloromethane
GC/MS	EPA 624; EPA 8260B/C; EPA 524.2	Bromoform
GC/MS	EPA 8260B/C; EPA 524.2	Carbon disulfide
GC/MS	EPA 624; EPA 8260B/C; EPA 524.2	Carbon tetrachloride
GC/MS	EPA 624; EPA 8260B/C; EPA 524.2	Chlorobenzene
GC/MS	EPA 624; EPA 8260B/C; EPA 524.2	Chloroethane
GC/MS	EPA 624; EPA 8260B/C; EPA 524.2	Chloroform
GC/MS	EPA 8260B/C	Chloroprene
GC/MS	EPA 8260B/C; EPA 524.2	cis-1, 2-Dichloroethene
GC/MS	EPA 624; EPA 8260B/C; EPA 524.2	cis-1, 3-Dichloropropene
GC/MS	EPA 8260B/C	Cis-1,4-Dichloro-2-butene
GC/MS	EPA 8260B/C	Cyclohexane
GC/MS	EPA 624; EPA 8260B/C; EPA 524.2	Dibromochloromethane
GC/MS	EPA 8260B/C; EPA 524.2	Dibromomethane
GC/MS	EPA 624; EPA 8260B/C; EPA 524.2	Dichlorodifluoromethane
GC/MS	EPA 8260B/C; EPA 524.2	Diethyl ether
GC/MS	EPA 8260B/C	Di-isopropylether
GC/MS	EPA 8260B/C; EPA 524.2	Ethyl methacrylate
GC/MS	EPA 624; EPA 8260B/C; EPA 524.2	Ethylbenzene
GC/MS	EPA 8260B/C	Ethyl-t-butylether
GC/MS	EPA 8260B/C; EPA 524.2	Hexachlorobutadiene
GC/MS	EPA 8260B/C	Iodomethane
GC/MS	EPA 8260B/C	Isobutyl alcohol
GC/MS	EPA 8260B/C	Isopropyl alcohol
GC/MS	EPA 8260B/C; EPA 524.2	Isopropyl benzene
GC/MS	EPA 8260B/C; EPA 524.2	m p-xylenes
GC/MS	EPA 8260B/C	Methyl acetate

Non-Potable Water		
Technology	**Method**	**Analyte**
GC/MS	EPA 8260B/C; EPA 524.2	Methacrylonitrile
GC/MS	EPA 624 / 8260B,C	Methyl bromide (Bromomethane)
GC/MS	EPA 624; EPA 8260B/C; EPA 524.2	Methyl chloride (Chloromethane)
GC/MS	EPA 8260B/C; EPA 524.2	Methyl methacrylate
GC/MS	EPA 8260B/C; EPA 524.2	Methyl tert-butyl ether
GC/MS	EPA 8260B/C	Methylcyclohexane
GC/MS	EPA 624; EPA 8260B/C; EPA 524.2	Methylene chloride
GC/MS	EPA 8260B/C; EPA 524.2	Naphthalene
GC/MS	EPA 8260B/C; EPA 524.2	n-Butylbenzene
GC/MS	EPA 8260B/C; EPA 524.2	n-Propylbenzene
GC/MS	EPA 8260B/C; EPA 524.2	o-Xylene
GC/MS	EPA 8260B/C	Pentachloroethane
GC/MS	EPA 8260B/C; EPA 524.2	p-Isopropyltoluene
GC/MS	EPA 8260B/C; EPA 524.2	Propionitrile
GC/MS	EPA 8260B/C; EPA 524.2	sec-butylbenzene
GC/MS	EPA 8260B/C; EPA 524.2	Styrene
GC/MS	EPA 8260B/C	t-Amylmethylether
GC/MS	EPA 8260B/C; EPA 524.2	tert-Butyl alcohol
GC/MS	EPA 8260B/C	tert-Butylbenzene
GC/MS	EPA 624; EPA 8260B/C; EPA 524.2	Tetrachloroethene (Perchloroethylene)
GC/MS	EPA 8260B/C; EPA 524.2	Tetrahydrofuran
GC/MS	EPA 624; EPA 8260B/C; EPA 524.2	Toluene
GC/MS	EPA 624; EPA 8260B/C; EPA 524.2	trans-1, 2-Dichloroethylene
GC/MS	EPA 624; EPA 8260B/C; EPA 524.2	trans-1, 3-Dichloropropylene
GC/MS	EPA 8260B/C; EPA 524.2	trans-1, 4-Dichloro-2-butuene
GC/MS	EPA 624; EPA 8260B/C; EPA 524.2	Trichloroethene (Trichloroethylene)
GC/MS	EPA 624; EPA 8260B/C; EPA 524.2	Trichlorofluoromethane
GC/MS	EPA 8260B/C	Vinyl acetate

Non-Potable Water		
Technology	**Method**	**Analyte**
GC/MS	EPA 624; EPA 8260B/C; EPA 524.2	Vinyl chloride
GC/MS	EPA 624 / 8260B,C	Xylene
GC/MS	EPA 8260B/C SIM	1,1,1,2-Tetrachloroethane
GC/MS	8260B, C SIM	1,1,1-Trichloroethane
GC/MS	EPA 8260B/C SIM	1,1,2,2-Tetrachloroethane
GC/MS	EPA 8260B/C SIM	1, 1, 2-Trichloroethane
GC/MS	EPA 8260B/C SIM	1,2,3-Trichloropropane
GC/MS	EPA 8260B/C SIM	1,1-Dichloroethane
GC/MS	EPA 8260B/C SIM	1,1-Dichloroethene
GC/MS	EPA 8260B/C SIM	1,2,4-Trichlorobenzene
GC/MS	EPA 8260B/C SIM	1,2,4-Trimethylbenzene
GC/MS	EPA 8260B/C SIM	1,2-Dibromo-3-chloropropane
GC/MS	EPA 8260B/C SIM	1,2-Dibromoethane
GC/MS	EPA 8260B/C SIM	1,2-Dichlorobenzene
GC/MS	EPA 8260B/C SIM	1,2-Dichloroethane
GC/MS	EPA 8260B/C SIM	1,2-Dichloropropane
GC/MS	EPA 8260B/C SIM	1,3-Dichlorobenzene
GC/MS	EPA 8260B/C SIM	1,3-Dichloropropane
GC/MS	EPA 8260B/C SIM	1,4-Dichlorobenzene
GC/MS	EPA 8260B/C SIM	2-Hexanone
GC/MS	EPA 8260B/C SIM	4-Methyl-2-pentanone
GC/MS	EPA 8260B/C SIM	Benzene
GC/MS	EPA 8260B/C SIM	Bromodichloromethane
GC/MS	EPA 8260B/C SIM	Carbon Tetrachloride
GC/MS	EPA 8260B/C SIM	Chloroform
GC/MS	EPA 8260B/C SIM	Chloromethane
GC/MS	EPA 8260B/C SIM	cis-1,2-Dichloroethene
GC/MS	EPA 8260B/C SIM	cis-1,3-Dichloropropene
GC/MS	EPA 8260B/C SIM	Dibromochloromethane
GC/MS	EPA 8260B/C SIM	Ethylbenzene
GC/MS	EPA 8260B/C SIM	Isopropylbenzene

Non-Potable Water		
Technology	**Method**	**Analyte**
GC/MS	EPA 8260B/C SIM	Hexachlorobutadiene
GC/MS	EPA 8260B/C SIM	Methylcyclohexane
GC/MS	EPA 8260B/C SIM	m,p-Xylene
GC/MS	EPA 8260B/C SIM	o-Xylene
GC/MS	EPA 8260B/C SIM	Tetrachloroethene
GC/MS	EPA 8260B/C SIM	trans-1,2-Dichloroethene
GC/MS	EPA 8260B/C SIM	Trans-1,3-Dichloropropene
GC/MS	EPA 8260B/C SIM	Trichloroethene
GC/MS	EPA 8260B/C SIM	Trichlorofluoromethane
GC/MS	EPA 8260B/C SIM	Vinyl Chloride
GC/MS	EPA 8260B/C SIM	Xylenes (total)
GC/MS	EPA 8270C/D	1, 2, 4, 5-Tetrachlorobenzene
GC/MS	EPA 625; EPA 8270C/D	1, 2, 4-Trichlorobenzene
GC/MS	EPA 625; EPA 8270C/D	1, 2-Dichlorobenzene
GC/MS	EPA 8270C/D	1, 2-Diphenylhydrazine
GC/MS	EPA 8270C/D	1, 3, 5-Trinitrobenzene
GC/MS	EPA 625; EPA 8270C/D	1, 3-Dichlorobenzene
GC/MS	EPA 8270C/D	1, 3-Dinitrobenzene
GC/MS	EPA 625; EPA 8270C/D	1, 4-Dichlorobenzene
GC/MS	EPA 8270C/D	1, 4-Dioxane
GC/MS	EPA 8270C/D	1, 4-Naphthoquinone
GC/MS	EPA 8270C/D	1, 4-Phenylenediamine
GC/MS	EPA 8270C/D	1-Chloronaphthalene
GC/MS	EPA 8270C/D	1-Methylnaphthalene
GC/MS	EPA 8270C/D	1-Naphthylamine
GC/MS	EPA 8270C/D	2, 3, 4, 6-Tetrachlorophenol
GC/MS	EPA 8270C/D	2, 4, 5-Trochlorophenol
GC/MS	EPA 625; EPA 8270C/D	2, 4, 6-Trichlorophenol
GC/MS	EPA 625; EPA 8270C/D	2, 4-Dichlorophenol
GC/MS	EPA 625; EPA 8270C/D	2, 4-Dimethylphenol
GC/MS	EPA 625; EPA 8270C/D	2, 4-Dinitrophenol

Non-Potable Water		
Technology	**Method**	**Analyte**
GC/MS	EPA 625; EPA 8270C/D	2, 4-Dinitrotoluene (2, 4-DNT)
GC/MS	EPA 8270C/D	2, 6-Dichlorophenol
GC/MS	EPA 625; EPA 8270C/D	2, 6-Dinitrotoluene (2, 6-DNT)
GC/MS	EPA 8270C/D	2-Acetylaminofluorene
GC/MS	EPA 625; EPA 8270C/D	2-Chloronaphthalene
GC/MS	EPA 625; EPA 8270C/D	2-Chlorophenol
GC/MS	EPA 625; EPA 8270C/D	2-Methyl-4 6-dinitrophenol
GC/MS	EPA 8270C/D	2-Methylnaphthalene
GC/MS	EPA 8270C/D	2-Methylphenol
GC/MS	EPA 8270C/D	2-Naphthylamine
GC/MS	EPA 8270C/D	2-Nitroaniline
GC/MS	EPA 625; EPA 8270C/D	2-Nitrophenol
GC/MS	EPA 8270C/D	2-Picoline
GC/MS	EPA 8270C/D	3-Methylcholanthrene
GC/MS	EPA 8270C/D	3-Nitroaniline
GC/MS	EPA 8270C/D	4-Aminobiphenyl
GC/MS	EPA 625; EPA 8270C/D	4-Bromophenyl phenyl ether
GC/MS	EPA 625; EPA 8270C/D	4-Chloro-3-methylphenol
GC/MS	EPA 8270C/D	4-Chloroaniline
GC/MS	EPA 625; EPA 8270C/D	4-Chlorophenyl phenylether
GC/MS	EPA 8270C/D	4-Dimethyl aminoazobenzene
GC/MS	EPA 8270C/D	3, 4-Methylphenol
GC/MS	EPA 8270C/D	4-Nitroaniline
GC/MS	EPA 625; EPA 8270C/D	4-Nitrophenol
GC/MS	EPA 8270C/D	4-Nitroquinoline-1-oxide
GC/MS	EPA 8270C/D	5-Nitro-o-toluidine
GC/MS	EPA 8270C/D	7, 12-Dimethylbenz(a)anthracene
GC/MS	EPA 8270C/D	a a-Dimethylphenethylamine
GC/MS	EPA 625; EPA 8270C/D	Acenaphthene
GC/MS	EPA 625; EPA 8270C/D	Acenaphthylene
GC/MS	EPA 8270C/D	Acetophenone

Non-Potable Water		
Technology	**Method**	**Analyte**
GC/MS	EPA 8270C/D	Aniline
GC/MS	EPA 625; EPA 8270C/D	Anthracene
GC/MS	EPA 8270C/D	Aramite
GC/MS	EPA 8270C/D	Atrazine
GC/MS	EPA 8270C/D	Azobenzene
GC/MS	EPA 8270C/D	Benzaldehyde
GC/MS	EPA 625; EPA 8270C/D	Benzidine
GC/MS	EPA 625; EPA 8270C/D	Benzo(a)anthracene
GC/MS	EPA 625; EPA 8270C/D	Benzo(a)pyrene
GC/MS	EPA 625; EPA 8270C/D	Benzo(b)fluoranthene
GC/MS	EPA 625; EPA 8270C/D	Benzo(g h i)perylene
GC/MS	EPA 625; EPA 8270C/D	Benzo(k)fluoranthene
GC/MS	EPA 8270C/D	Benzoic Acid
GC/MS	EPA 8270C/D	Benzyl alcohol
GC/MS	EPA 8270C/D	1,1-Biphenyl
GC/MS	EPA 625; EPA 8270C/D	bis(2-Chloroethoxy)methane
GC/MS	EPA 625; EPA 8270C/D	bis(2-Chloroethyl) ether
GC/MS	EPA 625; EPA 8270C/D	bis(2-Chloroisopropyl) ether (2, 2`-Oxybis(1-chloropropane)
GC/MS	EPA 625; EPA 8270C/D	bis(2-Ethylhexyl)adipate
GC/MS	EPA 625; EPA 8270C/D	bis(2-Ethylhexyl) phthalate (DEHP)
GC/MS	EPA 625; EPA 8270C/D	Butyl benzyl phthalate
GC/MS	EPA 8270C/D	Caprolactam
GC/MS	EPA 8270C/D	Carbazole
GC/MS	EPA 8270C/D	Chlorobenzilate
GC/MS	EPA 625; EPA 8270C/D	Chrysene
GC/MS	EPA 8270C/D	Diallate
GC/MS	EPA 8270C/D	Dibenzo(a,j)acridine
GC/MS	EPA 625; EPA 8270C/D	Dibenz(a h)anthracene
GC/MS	EPA 8270C/D	Dibenzofuran
GC/MS	EPA 8270C/D	Diethyladipate
GC/MS	EPA 625; EPA 8270C/D	Diethyl phthalate

Non-Potable Water

Technology	Method	Analyte
GC/MS	EPA 8270C/D	Dimethoate
GC/MS	EPA 625; EPA 8270C/D	Dimethyl phthalate
GC/MS	EPA 625; EPA 8270C/D	Di-n-butyl phthalate
GC/MS	EPA 625; EPA 8270C/D	Di-n-octyl phthalate
GC/MS	EPA 8270C/D	Dinoseb
GC/MS	EPA 8270C/D	Disulfoton
GC/MS	EPA 8270C/D	Ethyl methanesulfonate
GC/MS	EPA 8270C/D	Ethyl parathion
GC/MS	EPA 8270C/D	Ethyl methacrylate
GC/MS	EPA 8270C/D	Famfur
GC/MS	EPA 625; EPA 8270C/D	Fluoranthene
GC/MS	EPA 625; EPA 8270C/D	Fluorene
GC/MS	EPA 625; EPA 8270C/D	Hexachlorobenzene
GC/MS	EPA 625; EPA 8270C/D	Hexachlorobutadiene
GC/MS	EPA 625; EPA 8270C/D	Hexachlorocyclopentadiene
GC/MS	EPA 625; EPA 8270C/D	Hexachloroethane
GC/MS	EPA 8270C/D	Hexachlorophene
GC/MS	EPA 8270C/D	Hexachloropropene
GC/MS	EPA 625; EPA 8270C/D	Indeno(1, 2, 3-cd)pyrene
GC/MS	EPA 8270C/D	Isodrin
GC/MS	EPA 625; EPA 8270C/D	Isophorone
GC/MS	EPA 8270C/D	Isosafrole
GC/MS	EPA 8270C/D	Kepone
GC/MS	EPA 8270C/D	Methapyriline
GC/MS	EPA 8270C/D	Methy methanesulfonate
GC/MS	EPA 8270C/D	Methyl parathion
GC/MS	EPA 625; EPA 8270C/D	Naphthalene
GC/MS	EPA 625; EPA 8270C/D	Nitrobenzene
GC/MS	EPA 8270C/D	Nitroquinoline-1-oxide
GC/MS	EPA 8270C/D	n-Nitrosodiethylamine
GC/MS	EPA 625; EPA 8270C/D	n-Nitrosodimethylamine

Non-Potable Water		
Technology	**Method**	**Analyte**
GC/MS	EPA 8270C/D	n-Nitroso-di-n-butylamine
GC/MS	EPA 625; EPA 8270C/D	n-Nitrosodi-n-propylamine
GC/MS	EPA 625; EPA 8270C/D	n-Nitrosodiphenylamine
GC/MS	EPA 8270C/D	n-Nitrosomethylethylamine
GC/MS	EPA 8270C/D	n-Nitrosomorpholine
GC/MS	EPA 8270C/D	n-Nitrosopiperidine
GC/MS	EPA 8270C/D	n-Nitrosopyrrolidine
GC/MS	EPA 8270C/D	O,O,O-Triethyl phosphorothioate
GC/MS	EPA 8270C/D	o,o-Diethyl o-2pyrazinyl phosphorothioate
GC/MS	EPA 8270C/D	o-Toluidine
GC/MS	EPA 8270C/D	Pentachlorobenzene
GC/MS	EPA 8270C/D	Pentachloronitrobenzene
GC/MS	EPA 625; EPA 8270C/D	Pentachlorophenol
GC/MS	EPA 8270C/D	Phenacetin
GC/MS	EPA 625; EPA 8270C/D	Phenanthrene
GC/MS	EPA 625; EPA 8270C/D	Phenol
GC/MS	EPA 8270C/D	Phorate
GC/MS	EPA 8270C/D	Pronamide
GC/MS	EPA 625; EPA 8270C/D	Pyrene
GC/MS	EPA 8270C/D	Pyridine
GC/MS	EPA 8270C/D	Safrole
GC/MS	EPA 8270C/D	Sulfotepp
GC/MS	EPA 8270C/D	Thionazin
GC/MS	EPA 625; EPA 8270C/D	3, 3'-Dichlorobenzidine
GC/MS	EPA 8270C/D	3, 3'-Dimethylbenzidine
GC/MS	EPA 8270C/D SIM	1,1'-Biphenyl
GC/MS	EPA 8270C/D SIM	1,2,4,5-Tetrachlorobenzene
GC/MS	EPA 8270C/D SIM	1,4-Dioxane
GC/MS	EPA 8270C/D SIM	1-Methylnaphthalene
GC/MS	EPA 8270C/D SIM	2,2'-Oxybis(1-chloropropane
GC/MS	EPA 8270C/D SIM	2,3,4,6-Tetrachlorophenol

Non-Potable Water		
Technology	**Method**	**Analyte**
GC/MS	EPA 8270C/D SIM	2,4,5-Trichlorophenol
GC/MS	EPA 8270C/D SIM	2,4,6-Trichlorophenol
GC/MS	EPA 8270C/D SIM	2,4-Dichlorophenol
GC/MS	EPA 8270C/D SIM	2,4-Dimethylphenol
GC/MS	EPA 8270C/D SIM	2,4-Dinitrophenol
GC/MS	EPA 8270C/D SIM	2,4-Dinitrotoluene
GC/MS	EPA 8270C/D SIM	2,6-Dinitrotoluene
GC/MS	EPA 8270C/D SIM	2-Chloronaphthalene
GC/MS	EPA 8270C/D SIM	2-Chlorophenol
GC/MS	EPA 8270C/D SIM	2-Methylnaphthalene
GC/MS	EPA 8270C/D SIM	2-Methylphenol
GC/MS	EPA 8270C/D SIM	2-Nitroaniline
GC/MS	EPA 8270C/D SIM	2-Nitrophenol
GC/MS	EPA 8270C/D SIM	3&4-Methylphenol
GC/MS	EPA 8270C/D SIM	3,3'-Dichlorobenzidine
GC/MS	EPA 8270C/D SIM	3-Nitroaniline
GC/MS	EPA 8270C/D SIM	4,6-Dinitro-2-methylphenol
GC/MS	EPA 8270C/D SIM	4-Bromophenyl-phenylether
GC/MS	EPA 8270C/D SIM	4-Chloro-3-methylphenol
GC/MS	EPA 8270C/D SIM	4-Chloroaniline
GC/MS	EPA 8270C/D SIM	4-Chlorophenyl-phenylether
GC/MS	EPA 8270C/D SIM	4-Nitroaniline
GC/MS	EPA 8270C/D SIM	4-Nitrophenol
GC/MS	EPA 8270C/D SIM	Acenaphthene
GC/MS	EPA 8270C/D SIM	Acenaphthylene
GC/MS	EPA 8270C/D SIM	Acetophenone
GC/MS	EPA 8270C/D SIM	Anthracene
GC/MS	EPA 8270C/D SIM	Atrazine
GC/MS	EPA 8270C/D SIM	Benzaldehyde
GC/MS	EPA 8270C/D SIM	Benzo(a)anthracene
GC/MS	EPA 8270C/D SIM	Benzo(a)pyrene

Non-Potable Water		
Technology	**Method**	**Analyte**
GC/MS	EPA 8270C/D SIM	Benzo(b)fluoranthene
GC/MS	EPA 8270C/D SIM	Benzo(g,h,i)perylene
GC/MS	EPA 8270C/D SIM	Benzo(k)fluoranthene
GC/MS	EPA 8270C/D SIM	Bis(2-chloroethoxy)methane
GC/MS	EPA 8270C/D SIM	Bis(2-chloroethyl)ether
GC/MS	EPA 8270C/D SIM	Bis(2-ethylhexyl)phthalate
GC/MS	EPA 8270C/D SIM	Butylbenzylphthalate
GC/MS	EPA 8270C/D SIM	Caprolactam
GC/MS	EPA 8270C/D SIM	Carbazole
GC/MS	EPA 8270C/D SIM	Chrysene
GC/MS	EPA 8270C/D SIM	Dibenzo(a,h)anthracene
GC/MS	EPA 8270C/D SIM	Dibenzofuran
GC/MS	EPA 8270C/D SIM	Diethylphthalate
GC/MS	EPA 8270C/D SIM	Dimethyl phthalate
GC/MS	EPA 8270C/D SIM	Di-n-butylphthalate
GC/MS	EPA 8270C/D SIM	Di-n-octylphthalate
GC/MS	EPA 8270C/D SIM	Fluoranthene
GC/MS	EPA 8270C/D SIM	Fluorene
GC/MS	EPA 8270C/D SIM	Hexachlorobenzene
GC/MS	EPA 8270C/D SIM	Hexachlorobutadiene
GC/MS	EPA 8270C/D SIM	Hexachlorocyclopentadiene
GC/MS	EPA 8270C/D SIM	Hexachloroethane
GC/MS	EPA 8270C/D SIM	Indeno(1,2,3-cd)pyrene
GC/MS	EPA 8270C/D SIM	Isophorone
GC/MS	EPA 8270C/D SIM	Naphthalene
GC/MS	EPA 8270C/D SIM	Nitrobenzene
GC/MS	EPA 8270C/D SIM	n-Nitroso-di-n-propylamine
GC/MS	EPA 8270C/D SIM	n-Nitrosodiphenylamine
GC/MS	EPA 8270C/D SIM	Pentachlorophenol
GC/MS	EPA 8270C/D SIM	Phenanthrene
GC/MS	EPA 8270C/D SIM	Phenol

Non-Potable Water		
Technology	**Method**	**Analyte**
GC/MS	EPA 8270C/D SIM	Pyrene
HPLC/UV	EPA 8330A/B	1, 3, 5-Trinitrobenzene
HPLC/UV	EPA 8330A/B	1, 3-Dinitrobenzene
HPLC/UV	EPA 8330A/B	2, 4, 6-Trinitrotoluene
HPLC/UV	EPA 8330A/B	2, 4-Dinitrotoluene
HPLC/UV	EPA 8330A/B	2, 6-Dinitrotoluene
HPLC/UV	EPA 8330A/B	2-Amino-4, 6 -Dinitrotoluene
HPLC/UV	EPA 8330A/B	2-Nitrotoluene
HPLC/UV	EPA 8330A/B	3-Nitrotoluene
HPLC/UV	EPA 8330A/B	3,5-Dinitroaniline
HPLC/UV	EPA 8330A/B	4-Amino-2, 6-Dinitrotoluene
HPLC/UV	EPA 8330A/B	4-Nitrotoluene
HPLC/UV	EPA 8330A/B	Ethylene glycol dinitrate (EGDN)
HPLC/UV	EPA 8330A/B	Hexahydro-1, 3, 5-trinitro-1, 3, 5-triazine (RDX)
HPLC/UV	EPA 8330A/B	Nitrobenzene
HPLC/UV	EPA 8330A MOD	Nitroglycerin
HPLC/UV	EPA 8330B	Nitroglycerin
HPLC/UV	EPA 8330A/B	Octahydro-1, 3, 5, 7-tetrazocine (HMX)
HPLC/UV	EPA 8330A/B	Pentaerythritol Tetranitrate (PETN)
HPLC/UV	EPA 8330A/B	Tetryl
CVAA	EPA 245.1; EPA 7470A	Mercury
CVAF	EPA 1631E	Low Level Mercury
ICP/AES	EPA 200.7; EPA 6010B/C	Aluminum
ICP/AES	EPA 200.7; EPA 6010B/C	Antimony
ICP/AES	EPA 200.7; EPA 6010B/C	Arsenic
ICP/AES	EPA 200.7; EPA 6010B/C	Barium
ICP/AES	EPA 200.7; EPA 6010B/C	Beryllium
ICP/AES	EPA 200.7; EPA 6010B/C	Boron
ICP/AES	EPA 200.7; EPA 6010B/C	Cadmium
ICP/AES	EPA 200.7; EPA 6010B/C	Calcium
ICP/AES	EPA 200.7; EPA 6010B/C	Chromium

Non-Potable Water		
Technology	**Method**	**Analyte**
ICP/AES	EPA 200.7; EPA 6010B/C	Cobalt
ICP/AES	EPA 200.7; EPA 6010B/C	Copper
ICP/AES	EPA 200.7; EPA 6010B/C	Iron
ICP/AES	EPA 200.7; EPA 6010B/C	Lead
ICP/AES	EPA 200.7; EPA 6010B/C	Magnesium
ICP/AES	EPA 200.7; EPA 6010B/C	Manganese
ICP/AES	EPA 200.7; EPA 6010B/C	Molybdenum
ICP/AES	EPA 200.7; EPA 6010B/C	Nickel
ICP/AES	EPA 200.7; EPA 6010B/C	Potassium
ICP/AES	EPA 200.7; EPA 6010B/C	Selenium
ICP/AES	EPA 200.7; EPA 6010B/C	Silicon
ICP/AES	EPA 200.7; EPA 6010B/C	Silver
ICP/AES	EPA 200.7; EPA 6010B/C	Sodium
ICP/AES	EPA 6010B/C	Strontium
ICP/AES	EPA 200.7; EPA 6010B/C	Thallium
ICP/AES	EPA 200.7; EPA 6010B/C	Tin
ICP/AES	EPA 200.7; EPA 6010B/C	Titanium
ICP/AES	EPA 200.7; EPA 6010B/C	Vanadium
ICP/AES	EPA 200.7; EPA 6010B/C	Zinc
ICP/MS	EPA 200.8; EPA 6020A	Aluminum
ICP/MS	EPA 200.8; EPA 6020A	Antimony
ICP/MS	EPA 200.8; EPA 6020A	Arsenic
ICP/MS	EPA 200.8; EPA 6020A	Barium
ICP/MS	EPA 200.8; EPA 6020A	Beryllium
ICP/MS	EPA 200.8; EPA 6020A	Boron
ICP/MS	EPA 200.8; EPA 6020A	Cadmium
ICP/MS	EPA 200.8; EPA 6020A	Calcium
ICP/MS	EPA 200.8; EPA 6020A	Chromium
ICP/MS	EPA 200.8; EPA 6020A	Cobalt
ICP/MS	EPA 200.8; EPA 6020A	Copper
ICP/MS	EPA 200.8; EPA 6020A	Iron

Non-Potable Water		
Technology	**Method**	**Analyte**
ICP/MS	EPA 200.8; EPA 6020A	Lead
ICP/MS	EPA 200.8; EPA 6020A	Magnesium
ICP/MS	EPA 200.8; EPA 6020A	Manganese
ICP/MS	EPA 200.8; EPA 6020A	Molybdenum
ICP/MS	EPA 200.8; EPA 6020A	Nickel
ICP/MS	EPA 200.8; EPA 6020A	Potassium
ICP/MS	EPA 200.8; EPA 6020A	Selenium
ICP/MS	EPA 200.8; EPA 6020A	Silicon
ICP/MS	EPA 200.8; EPA 6020A	Silver
ICP/MS	EPA 200.8; EPA 6020A	Sodium
ICP/MS	EPA 6020A	Strontium
ICP/MS	EPA 200.8; EPA 6020A	Thallium
ICP/MS	EPA 200.8; EPA 6020A	Tin
ICP/MS	EPA 200.8; EPA 6020A	Titanium
ICP/MS	EPA 200.8; EPA 6020A	Tungsten
ICP/MS	EPA 200.8	Uranium
ICP/MS	EPA 200.8; EPA 6020A	Vanadium
ICP/MS	EPA 200.8; EPA 6020A	Zinc
IC	EPA 300.0; EPA 9056A	Chloride
IC	EPA 300.0; EPA 9056A	Fluoride
IC	EPA 300.0; EPA 9056A	Nitrate as N
IC	EPA 300.0; EPA 9056A	Nitrite as N
IC	EPA 300.0; EPA 9056A	Nitrate + Nitrite
IC	EPA 300.0; EPA 9056A	Orthophosphate as P
IC	EPA 300.0; EPA 9056A	Sulfate
IC	SOP CA-776	Lactic Acid
IC	SOP CA-776	Acetic Acid
IC	SOP CA-776	Propionic Acid
IC	SOP CA-776	Formic Acid
IC	SOP CA-776	Butyric Acid
IC	SOP CA-776	Pyruvic Acid

Non-Potable Water		
Technology	**Method**	**Analyte**
IC	SOP CA-776	i-Pentanoic Acid
IC	SOP CA-776	Pentanoic Acid
IC	SOP CA-776	i-Hexanoic Acid
IC	SOP CA-776	Hexanoic Acid
Titration	EPA 310.1; SM 2320B	Alkalinity
Caculation	SM 2340B	Hardness
Gravimetric	EPA 1664A; EPA 9070A	Oil and Grease, Oil and Grease with SGT
Gravimetric	SM 2540B/C/D	Solids
ISE	EPA 120.1; SM 2510B	Conductivity
ISE	SM 2520B	Practical Salinity
ISE	SM 4500F- C	Fluoride
ISE	SM 4500H+ B	pH
ISE	SM 5210B	TBOD / CBOD
Physical	EPA 1010A	Ignitability
Physical	EPA 9040C	pH
Titration	SM 2340C	Hardness
Titration	SM 4500SO_3 B	Sulfite
Titration	EPA 9034; SM 4500S^{2-} F	Sulfide
Titration	EPA SW-846 Chapter 7.3.4	Reactive Sulfide
IR	EPA 9060A; SM 5310B	Total organic carbon
Turbidimetric	EPA 180.1; SM 2130B	Turbidity
Turbidimetric	EPA 9038; ASTM 516-02	Sulfate
UV/VIS	EPA 335.4; EPA 9012B; SM 4500-CN G	Amenable cyanide
UV/VIS	EPA 350.1; SM 4500NH3 H	Ammonia as N
UV/VIS	SM 3500Fe D	Ferrous Iron
UV/VIS	EPA 351.2	Kjeldahl nitrogen - total
UV/VIS	EPA 353.2; SM 4500NO3 F	Nitrate + Nitrite
UV/VIS	EPA 353.2; SM 4500NO3 F	Nitrate as N
UV/VIS	EPA 353.2; SM 4500NO3 F	Nitrite as N
UV/VIS	EPA 365.2; SM 4500P E	Orthophosphate as P
UV/VIS	EPA 365.4	Phosphorus total

Non-Potable Water		
Technology	**Method**	**Analyte**
UV/VIS	EPA 821/R-91-100	AVS-SEM
UV/VIS	EPA 410.4	COD
UV/VIS	EPA 420.1; EPA 9065	Total Phenolics
UV/VIS	SM 4500Cl G	Total Residual Chlorine
UV/VIS	SM 5540C	MBAS
UV/VIS	EPA 7196A; SM 3500-Cr D	Chromium VI
UV/VIS	EPA 9012B; EPA 335.4	Total Cyanide
UV/VIS	EPA 9251; SM 4500Cl E	Chloride
UV/VIS	EPA SW-846 Chapter 7.3.4	Reactive Cyanide

Preparation	Method	Type
Cleanup Methods	EPA 3640A	Gel Permeation Clean-up
Cleanup Methods	EPA 3630C	Silica Gel
Cleanup Methods	EPA 3660B	Sulfur Clean-Up
Cleanup Methods	EPA 3665A	Sulfuric Acid Clean-Up
Organic Preparation	EPA 3510C	Separatory Funnel Extraction
Organic Preparation	EPA 3520C	Continuous Liquid-Liquid Extraction
Inorganic Preparation	EPA 3010A	Hotblock
Volatile Organic Preparation	EPA 5030C	Purge and Trap

Solid and Chemical Waste		
Technology	**Method**	**Analyte**
GC/ECD	EPA 8081B	2,4`-DDD
GC/ECD	EPA 8081B	2,4`-DDE
GC/ECD	EPA 8081B	2,4`-DDT
GC/ECD	EPA 8081B	4, 4`-DDD
GC/ECD	EPA 8081B	4, 4`-DDE
GC/ECD	EPA 8081B	4, 4`-DDT
GC/ECD	EPA 8081B	Aldrin
GC/ECD	EPA 8081B	alpha-BHC (alpha-Hexachlorocyclohexane)

Solid and Chemical Waste		
Technology	**Method**	**Analyte**
GC/ECD	EPA 8081B	Alpha-Chlordane
GC/ECD	EPA 8081B	beta-BHC (beta-Hexachlorocyclohexane)
GC/ECD	EPA 608; EPA 8081B	Chlordane (tech.)
GC/ECD	EPA 8081B	Cis-Nonachlor
GC/ECD	EPA 8081B	delta-BHC
GC/ECD	EPA 8081B	Dieldrin
GC/ECD	EPA 8081B	Endosulfan I
GC/ECD	EPA 8081B	Endosulfan II
GC/ECD	EPA 8081B	Endosulfan sulfate
GC/ECD	EPA 8081B	Endrin
GC/ECD	EPA 8081B	Endrin aldehyde
GC/ECD	EPA 8081B	Endrin Ketone
GC/ECD	EPA 8081B	gamma-BHC (Lindane gamma-Hexachlorocyclohexane)
GC/ECD	EPA 8081B	gamma-Chlordane
GC/ECD	EPA 8081B	Heptachlor
GC/ECD	EPA 8081B	Heptachlor epoxide
GC/ECD	EPA 8081B	Hexachlorobenzene
GC/ECD	EPA 8081B	Methoxychlor
GC/ECD	EPA 8081B	Mirex
GC/ECD	EPA 8081B	Oxychlordane
GC/ECD	EPA 8081B	Toxaphene (Chlorinated camphene)
GC/ECD	EPA 8081B	Trans-Nonachlor
GC/ECD	EPA 8082A	Aroclor-1016 (PCB-1016)
GC/ECD	EPA 8082A	Aroclor-1221 (PCB-1221)
GC/ECD	EPA 8082A	Aroclor-1232 (PCB-1232)
GC/ECD	EPA 8082A	Aroclor-1242 (PCB-1242)
GC/ECD	EPA 8082A	Aroclor-1248 (PCB-1248)
GC/ECD	EPA 8082A	Aroclor-1254 (PCB-1254)
GC/ECD	EPA 8082A	Aroclor-1260 (PCB-1260)
GC/ECD	EPA 8082A MOD	Aroclor-1262 (PCB-1262)
GC/ECD	EPA 8082A MOD	Aroclor-1268 (PCB-1268)

Solid and Chemical Waste		
Technology	**Method**	**Analyte**
GC/ECD	EPA 8082A	2, 2', 3, 3', 4, 4', 5, 5', 6-Nonachlorobiphenyl (BZ 206)
GC/ECD	EPA 8082A	2, 2', 3, 3', 4, 4', 5, 6-Octachlorobiphenyl (BZ 195)
GC/ECD	EPA 8082A	2, 2', 3, 3', 4, 4', 5-Heptachlorobiphenyl (BZ 170)
GC/ECD	EPA 8082A	2, 2', 3, 3', 4, 4'-Hexachlorobiphenyl (BZ 128)
GC/ECD	EPA 8082A	2, 2', 3, 4, 4', 5, 5'-Heptachlorobiphenyl (BZ 180)
GC/ECD	EPA 8082A	2, 2', 3, 4, 4', 5', 6-Heptachlorobiphenyl (BZ 183)
GC/ECD	EPA 8082A	2, 2', 3, 4, 4', 5-Hexachlorobiphenyl (BZ 138)
GC/ECD	EPA 8082A	2, 2', 3, 4, 4', 6, 6'-Heptachlorobiphenyl (BZ 184)
GC/ECD	EPA 8082A	2, 2', 3, 4', 5, 5', 6-Heptachlorobiphenyl (BZ 187)
GC/ECD	EPA 8082A	2, 2', 3, 4, 5'-Pentachlorobiphenyl (BZ 87)
GC/ECD	EPA 8082A	2, 2', 3, 5'-Tetrachlorobiphenyl (BZ 44)
GC/ECD	EPA 8082A	2, 2', 4, 4', 5, 5'-Hexachlorobiphenyl (BZ 153)
GC/ECD	EPA 8082A	2, 2', 4, 5, 5'-Pentachlorobiphenyl (BZ 101)
GC/ECD	EPA 8082A	2, 2', 4, 5-Tetrachlorobiphenyl (BZ 48)
GC/ECD	EPA 8082A	2, 2', 4, 5'-Tetrachlorobiphenyl (BZ 49)
GC/ECD	EPA 8082A	2, 2', 5, 5'-Tetrachlorobiphenyl (BZ 52)
GC/ECD	EPA 8082A	2, 2', 5-Trichlorobiphenyl (BZ 18)
GC/ECD	EPA 8082A	2, 3, 3', 4, 4', 5-Hexachlorobiphenyl (BZ 156)
GC/ECD	EPA 8082A	2, 3, 3', 4, 4', 5'-Hexachlorobiphenyl (BZ 157)
GC/ECD	EPA 8082A	2, 3, 3', 4, 4'-Pentachlorobiphenyl (BZ 105)
GC/ECD	EPA 8082A	2, 3, 3', 4, 4', 5, 5'-Heptachlorobiphenyl (BZ 189)
GC/ECD	EPA 8082A	2, 3', 4, 4', 5, 5'-Hexachlorobiphenyl (BZ 167)
GC/ECD	EPA 8082A	2, 3', 4, 4', 5-Pentachlorobiphenyl (BZ 118)
GC/ECD	EPA 8082A	2, 3', 4, 4',5'-Pentachlorobiphenyl (BZ 123)
GC/ECD	EPA 8082A	2, 3', 4, 4'-Tetrachlorobiphenyl (BZ 66)
GC/ECD	EPA 8082A	2, 3, 4, 4', 5-Pentachlorobiphenyl (BZ 114)
GC/ECD	EPA 8082A	2, 4, 4'-Trichlorobiphenyl (BZ 28)
GC/ECD	EPA 8082A	2, 4'-Dichlorobiphenyl (BZ 8)
GC/ECD	EPA 8082A	3, 3', 4, 4', 5, 5'-Hexachlorobiphenyl (BZ 169)
GC/ECD	EPA 8082A	3, 3', 4, 4', 5-Pentachlorobiphenyl (BZ 126)
GC/ECD	EPA 8082A	3, 3', 4, 4'-Tetrachlorobiphenyl (BZ 77)

Solid and Chemical Waste		
Technology	**Method**	**Analyte**
GC/ECD	EPA 8082A	3, 4, 4', 5-Tetrachlorobiphenyl (BZ 81)
GC/ECD	EPA 8082A	Decachlorobiphenyl (BZ 209)
GC/ECD	EPA 8151A	2, 4, 5-T
GC/ECD	EPA 8151A	2, 4-D
GC/ECD	EPA 8151A	2, 4-DB
GC/ECD	EPA 8151A	Dalapon
GC/ECD	EPA 8151A	Dicamba
GC/ECD	EPA 8151A	Dichloroprop
GC/ECD	EPA 8151A	Dinoseb
GC/ECD	EPA 8151A	MCPA
GC/ECD	EPA 8151A	MCPP
GC/ECD	EPA 8151A	Pentachlorophenol
GC/ECD	EPA 8151A	Silvex (2, 4, 5-TP)
GC/FID	EPA 8015C/D	Diesel range organics (DRO)
GC/FID	EPA 8015C/D	Total Petroleum Hydrocarbons (TPH)
GC/FID	EPA 8015C/D	Gasoline range organics (GRO)
GC/FID/PID	MA DEP VPH	Volatile Organic Hydrocarbons
GC/FID	MA DEP EPH	Extractable Petroleum Hydrocarbons
GC/FID	MA DEP EPH EPA 3546	Extractable Petroleum Hydrocarbons Microwave Extraction Preparation
GC/FID	CT-ETPH	Total Petroleum Hydrocarbons
GC/FID	TNRCC Method 1005	Total Petroleum Hydrocarbons
GC/FID	FL-PRO	Petroleum Range Organics
GC/ECD	EPA 8011	1, 2-Dibromoethane (EDB)
GC/ECD	EPA 8011	1, 2-Dibromo-3-chloropropane
GC/MS	EPA 8260B/C	1, 1, 1, 2-Tetrachloroethane
GC/MS	EPA 8260B/C	1,1,2-Trichloro-1,2,2-trifluoroethane
GC/MS	EPA 8260B/C	1, 1, 1-Trichloroethane
GC/MS	EPA 8260B/C	1, 1, 2, 2-Tetrachloroethane
GC/MS	EPA 8260B/C	1, 1, 2-Trichloroethane
GC/MS	EPA 8260B/C	1, 1-Dichloroethane
GC/MS	EPA 8260B/C	1, 1-Dichloroethylene

Solid and Chemical Waste		
Technology	**Method**	**Analyte**
GC/MS	EPA 8260B/C	1, 1-Dichloropropene
GC/MS	EPA 8260B/C	1, 2, 3-Trichlorobenzene
GC/MS	EPA 8260B/C	1, 2, 3-Trichloropropane
GC/MS	EPA 8260B/C	1,2,3-Trimethylbenzene
GC/MS	EPA 8260B/C	1, 2, 4-Trichlorobenzene
GC/MS	EPA 8260B/C	1, 2, 4-Trimethylbenzene
GC/MS	EPA 8260B/C	1, 2-Dibromo-3-chloropropane
GC/MS	EPA 8260B/C	1, 2-Dibromoethane
GC/MS	EPA 8260B/C	1, 2-Dichlorobenzene
GC/MS	EPA 8260B/C	1, 2-Dichloroethane
GC/MS	EPA 8260B/C	1, 2-Dichloropropane
GC/MS	EPA 8260B/C	1,3,5-Trichlorobenzene
GC/MS	EPA 8260B/C	1, 3, 5-Trimethylbenzene
GC/MS	EPA 8260B/C	1, 3-Dichlorobenzene
GC/MS	EPA 8260B/C	1, 3-Dichloropropane
GC/MS	EPA 8260B/C	1, 4-Dichlorobenzene
GC/MS	EPA 8260B/C	1, 4-Dioxane
GC/MS	EPA 8260B/C	1-Chlorohexane
GC/MS	EPA 8260B/C	2, 2-Dichloropropane
GC/MS	EPA 8260B/C	2-Butanone
GC/MS	EPA 8260B/C	2-Chloroethyl vinyl ether
GC/MS	EPA 8260B/C	2-Chlorotoluene
GC/MS	EPA 8260B/C	2-Hexanone
GC/MS	EPA 8260B/C	4-Chlorotoluene
GC/MS	EPA 8260B/C	4-Methyl-2-pentanone
GC/MS	EPA 8260B/C	Acetone
GC/MS	EPA 8260B/C	Acetonitrile
GC/MS	EPA 8260B/C	Acrolein
GC/MS	EPA 8260B/C	Acrylonitrile
GC/MS	EPA 8260B/C	Allyl chloride
GC/MS	EPA 8260B/C	Benzene

Solid and Chemical Waste		
Technology	**Method**	**Analyte**
GC/MS	EPA 8260B/C	Benzyl chloride
GC/MS	EPA 8260B/C	Bromobenzene
GC/MS	EPA 8260B/C	Bromochloromethane
GC/MS	EPA 8260B/C	Bromodichloromethane
GC/MS	EPA 8260B/C	Bromoform
GC/MS	EPA 8260B/C	Carbon disulfide
GC/MS	EPA 8260B/C	Carbon tetrachloride
GC/MS	EPA 8260B/C	Chlorobenzene
GC/MS	EPA 8260B/C	Chloroethane
GC/MS	EPA 8260B/C	Chloroform
GC/MS	EPA 8260B/C	Chloroprene
GC/MS	EPA 8260B/C	cis-1, 2-Dichloroethene
GC/MS	EPA 8260B/C	cis-1, 3-Dichloropropene
GC/MS	EPA 8260B/C	cis-1,3-Dichloro-2-butene
GC/MS	EPA 8260B/C	Cyclohexane
GC/MS	EPA 8260B/C	Dibromochloromethane
GC/MS	EPA 8260B/C	Dibromomethane
GC/MS	EPA 8260B/C	Dichlorodifluoromethane
GC/MS	EPA 8260B/C	Diethyl ether
GC/MS	EPA 8260B/C	Di-isopropylether
GC/MS	EPA 8260B/C	1,2-Dibromoethane (EDB)
GC/MS	EPA 8260B/C	Ethyl methacrylate
GC/MS	EPA 8260B/C	Ethylbenzene
GC/MS	EPA 8260B/C	Ethyl-t-butylether
GC/MS	EPA 8260B/C	Hexachlorobutadiene
GC/MS	EPA 8260B/C	Iodomethane
GC/MS	EPA 8260B/C	Isobutyl alcohol
GC/MS	EPA 8260B/C	Isopropyl alcohol
GC/MS	EPA 8260B/C	Isopropyl benzene
GC/MS	EPA 8260B/C	m p-xylenes
GC/MS	EPA 8260B, C	Methyl acetate

Solid and Chemical Waste		
Technology	**Method**	**Analyte**
GC/MS	EPA 8260B/C	Methacrylonitrile
GC/MS	EPA 8260B/C	Methyl bromide (Bromomethane)
GC/MS	EPA 8260B/C	Methyl chloride (Chloromethane)
GC/MS	EPA 8260B/C	Methyl methacrylate
GC/MS	EPA 8260B/C	Methyl tert-butyl ether
GC/MS	EPA 8260B/C	Methylcyclohexane
GC/MS	EPA 8260B/C	Methylene chloride
GC/MS	EPA 8260B/C	Naphthalene
GC/MS	EPA 8260B/C	n-Butylbenzene
GC/MS	EPA 8260B/C	n-proplybenzene
GC/MS	EPA 8260B/C	o-Xylene
GC/MS	EPA 8260B/C	pentachloroethane
GC/MS	EPA 8260B/C	p-Isopropyltoluene
GC/MS	EPA 8260B/C	Propionitrile
GC/MS	EPA 8260B/C	sec-butylbenzene
GC/MS	EPA 8260B/C	Styrene
GC/MS	EPA 8260B/C	t-Amylmethylether
GC/MS	EPA 8260B/C	tert-Butyl alcohol
GC/MS	EPA 8260B/C	tert-Butylbenzene
GC/MS	EPA 8260B/C	Tetrachloroethylene (Perchloroethylene)
GC/MS	EPA 8260B/C	Tetrahydrofuran
GC/MS	EPA 8260B/C	Toluene
GC/MS	EPA 8260B/C	trans-1, 2-Dichloroethylene
GC/MS	EPA 8260B/C	trans-1, 3-Dichloropropylene
GC/MS	EPA 8260B/C	Trans-1, 4-Dichloro-2-butuene
GC/MS	EPA 8260B/C	Trichloroethene (Trichloroethylene)
GC/MS	EPA 8260B/C	Trichlorofluoromethane
GC/MS	EPA 8260B/C	Vinyl acetate
GC/MS	EPA 8260B/C	Vinyl chloride
GC/MS	EPA 8260B/C	Xylene
GC/MS	EPA 8260B/C SIM	1,1,1,2-Tetrachloroethane

Solid and Chemical Waste		
Technology	**Method**	**Analyte**
GC/MS	EPA 8260B/C SIM	1,1,1-Trichloroethane
GC/MS	EPA 8260B/C SIM	1,1,2,2-Tetrachloroethane
GC/MS	EPA 8260B/C SIM	1, 1, 2-Trichloroethane
GC/MS	EPA 8260B/C SIM	1,2,3-Trichloropropane
GC/MS	EPA 8260B/C SIM	1,1-Dichloroethane
GC/MS	EPA 8260B/C SIM	1,1-Dichloroethene
GC/MS	EPA 8260B/C SIM	1,2,4-Trichlorobenzene
GC/MS	EPA 8260B/C SIM	1,2,4-Trimethylbenzene
GC/MS	EPA 8260B/C SIM	1,2-Dibromo-3-chloropropane
GC/MS	EPA 8260B/C SIM	1,2-Dibromoethane
GC/MS	EPA 8260B/C SIM	1,2-Dichlorobenzene
GC/MS	EPA 8260B/C SIM	1,2-Dichloroethane
GC/MS	EPA 8260B/C SIM	1,2-Dichloropropane
GC/MS	EPA 8260B/C SIM	1,3-Dichlorobenzene
GC/MS	EPA 8260B/C SIM	1,3-Dichloropropane
GC/MS	EPA 8260B/C SIM	1,4-Dichlorobenzene
GC/MS	EPA 8260B/C SIM	2-Hexanone
GC/MS	EPA 8260B/C SIM	4-Methyl-2-pentanone
GC/MS	EPA 8260B/C SIM	Benzene
GC/MS	EPA 8260B/C SIM	Bromodichloromethane
GC/MS	EPA 8260B/C SIM	Carbon Tetrachloride
GC/MS	EPA 8260B/C SIM	Chloroform
GC/MS	EPA 8260B/C SIM	Chloromethane
GC/MS	EPA 8260B/C SIM	cis-1,2-Dichloroethene
GC/MS	EPA 8260B/C SIM	cis-1,3-Dichloropropene
GC/MS	EPA 8260B/C SIM	Dibromochloromethane
GC/MS	EPA 8260B/C SIM	Ethylbenzene
GC/MS	EPA 8260B/C SIM	Isopropylbenzene
GC/MS	EPA 8260B/C SIM	Hexachlorobutadiene
GC/MS	EPA 8260B/C SIM	Methylcyclohexane
GC/MS	EPA 8260B/C SIM	m,p-Xylene

Solid and Chemical Waste		
Technology	**Method**	**Analyte**
GC/MS	EPA 8260B/C SIM	o-Xylene
GC/MS	EPA 8260B/C SIM	Tetrachloroethene
GC/MS	EPA 8260B/C SIM	trans-1,2-Dichloroethene
GC/MS	EPA 8260B/C SIM	Trans-1,3-Dichloropropene
GC/MS	EPA 8260B/C SIM	Trichloroethene
GC/MS	EPA 8260B/C SIM	Trichlorofluoromethane
GC/MS	EPA 8260B/C SIM	Vinyl Chloride
GC/MS	EPA 8260B/C SIM	Xylenes (total)
GC/MS	EPA 8270C/D	1, 2, 4, 5-Tetrachlorobenzene
GC/MS	EPA 8270C/D	1, 2, 4-Trichlorobenzene
GC/MS	EPA 8270C/D	1, 2-Dichlorobenzene
GC/MS	EPA 8270C/D	1, 2-Diphenylhydrazine
GC/MS	EPA 8270C/D	1, 3, 5-Trinitrobenzene
GC/MS	EPA 8270C/D	1, 3-Dichlorobenzene
GC/MS	EPA 8270C/D	1, 3-Dinitrobenzene
GC/MS	EPA 8270C/D	1, 4-Dichlorobenzene
GC/MS	EPA 8270C/D	1, 4-Dioxane
GC/MS	EPA 8270C/D	1, 4-Naphthoquinone
GC/MS	EPA 8270C/D	1, 4-Phenylenediamine
GC/MS	EPA 8270C/D	1,1-Biphenyl
GC/MS	EPA 8270C/D	1-Chloronaphthalene
GC/MS	EPA 8270C/D	1-Methylnaphthalene
GC/MS	EPA 8270C/D	1-Naphthylamine
GC/MS	EPA 8270C/D	2, 3, 4, 6-Tetrachlorophenol
GC/MS	EPA 8270C/D	2, 4, 5-Trochlorophenol
GC/MS	EPA 8270C/D	2, 4, 6-Trichlorophenol
GC/MS	EPA 8270C/D	2, 4-Dichlorophenol
GC/MS	EPA 8270C/D	2, 4-Dimethylphenol
GC/MS	EPA 8270C/D	2, 4-Dinitrophenol
GC/MS	EPA 8270C/D	2, 4-Dinitrotoluene (2 4-DNT)
GC/MS	EPA 8270C/D	2, 6-Dichlorophenol

Solid and Chemical Waste		
Technology	**Method**	**Analyte**
GC/MS	EPA 8270C/D	2, 6-Dinitrotoluene (2 6-DNT)
GC/MS	EPA 8270C/D	2-Acetylaminofluorene
GC/MS	EPA 8270C/D	2-Chloronaphthalene
GC/MS	EPA 8270C/D	2-Chlorophenol
GC/MS	EPA 8270C/D	2-Methyl-4, 6-dinitrophenol
GC/MS	EPA 8270C/D	2-Methylnaphthalene
GC/MS	EPA 8270C/D	2-Methylphenol
GC/MS	EPA 8270C/D	2-Naphthylamine
GC/MS	EPA 8270C/D	2-Nitroaniline
GC/MS	EPA 8270C/D	2-Nitrophenol
GC/MS	EPA 8270C/D	2-Picoline
GC/MS	EPA 8270C/D	3, 3`-Dichlorobenzidine
GC/MS	EPA 8270C/D	3, 3'-Dimethylbenzidine
GC/MS	EPA 8270C/D	3,4-Methylphenol
GC/MS	EPA 8270C/D	3-Methylcholanthrene
GC/MS	EPA 8270C/D	3-Nitroaniline
GC/MS	EPA 8270C/D	4-Aminobiphenyl
GC/MS	EPA 8270C/D	4-Bromophenyl phenyl ether
GC/MS	EPA 8270C/D	4-Chloro-3-methylphenol
GC/MS	EPA 8270C/D	4-Chloroaniline
GC/MS	EPA 8270C/D	4-Chlorophenyl phenylether
GC/MS	EPA 8270C/D	4-Dimethyl aminoazobenzene
GC/MS	EPA 8270C/D	4-Nitroaniline
GC/MS	EPA 8270C/D	4-Nitrophenol
GC/MS	EPA 8270C/D	4-Nitroquinoline-1-oxide
GC/MS	EPA 8270C/D	5-Nitro-o-toluidine
GC/MS	EPA 8270C/D	7,12-Dimethylbenz(a)anthracene
GC/MS	EPA 8270C/D	a a-Dimethylphenethylamine
GC/MS	EPA 8270C/D	Acenaphthene
GC/MS	EPA 8270C/D	Acenaphthylene
GC/MS	EPA 8270C/D	Acetophenone

Solid and Chemical Waste		
Technology	**Method**	**Analyte**
GC/MS	EPA 8270C/D	Aniline
GC/MS	EPA 8270C/D	Anthracene
GC/MS	EPA 8270C/D	Aramite
GC/MS	EPA 8270C/D	Atrazine
GC/MS	EPA 8270C/D	Azobenzene
GC/MS	EPA 8270C/D	Benzaldehyde
GC/MS	EPA 8270C/D	Benzidine
GC/MS	EPA 8270C/D	Benzo(a)anthracene
GC/MS	EPA 8270C/D	Benzo(a)pyrene
GC/MS	EPA 8270C/D	Benzo(b)fluoranthene
GC/MS	EPA 8270C/D	Benzo(g h i)perylene
GC/MS	EPA 8270C/D	Benzo(k)fluoranthene
GC/MS	EPA 8270C/D	Benzoic Acid
GC/MS	EPA 8270C/D	Benzyl alcohol
GC/MS	EPA 8270C/D	bis(2-Chloroethoxy)methane
GC/MS	EPA 8270C/D	bis(2-Chloroethyl) ether
GC/MS	EPA 8270C/D	bis(2-Chloroisopropyl) ether (2, 2`-Oxybis(1-chloropropane))
GC/MS	EPA 8270C/D	bis(2-Ethylhexyl) phthalate (DEHP)
GC/MS	EPA 8270C/D	Bis(2-Ethylhexyl)adipate
GC/MS	EPA 8270C/D	Butyl benzyl phthalate
GC/MS	EPA 8270C/D	Caprolactam
GC/MS	EPA 8270C/D	Carbazole
GC/MS	EPA 8270C/D	Chlorobenzilate
GC/MS	EPA 8270C/D	Chrysene
GC/MS	EPA 8270C/D	Diallate
GC/MS	EPA 8270C/D	Dibenz(a h)anthracene
GC/MS	EPA 8270C/D	Dibenzo(a,j)acridine
GC/MS	EPA 8270C/D	Dibenzofuran
GC/MS	EPA 8270C/D	Diethyl phthalate
GC/MS	EPA 8270C/D	Diethyladipate
GC/MS	EPA 8270C/D	Dimethoate

Solid and Chemical Waste		
Technology	**Method**	**Analyte**
GC/MS	EPA 8270C/D	Dimethyl phthalate
GC/MS	EPA 8270C/D	Di-n-butyl phthalate
GC/MS	EPA 8270C/D	Di-n-octyl phthalate
GC/MS	EPA 8270C/D	Dinoseb
GC/MS	EPA 8270C/D	Disulfoton
GC/MS	EPA 8270C/D	Ethyl methacrylate
GC/MS	EPA 8270C/D	Ethyl methanesulfonate
GC/MS	EPA 8270C/D	Ethyl parathion
GC/MS	EPA 8270C/D	Famfur
GC/MS	EPA 8270C/D	Fluoranthene
GC/MS	EPA 8270C/D	Fluorene
GC/MS	EPA 8270C/D	Hexachlorobenzene
GC/MS	EPA 8270C/D	Hexachlorobutadiene
GC/MS	EPA 8270C/D	Hexachlorocyclopentadiene
GC/MS	EPA 8270C/D	Hexachloroethane
GC/MS	EPA 8270C/D	Hexachlorophene
GC/MS	EPA 8270C/D	Hexachloropropene
GC/MS	EPA 8270C/D	Indeno(1, 2, 3-cd)pyrene
GC/MS	EPA 8270C/D	Isodrin
GC/MS	EPA 8270C/D	Isophorone
GC/MS	EPA 8270C/D	Isosafrole
GC/MS	EPA 8270C/D	Kepone
GC/MS	EPA 8270C/D	Methapyriline
GC/MS	EPA 8270C/D	Methyl methanesulfonate
GC/MS	EPA 8270C/D	Methyl parathion
GC/MS	EPA 8270C/D	Naphthalene
GC/MS	EPA 8270C/D	Nitrobenzene
GC/MS	EPA 8270C/D	n-Nitrosodiethylamine
GC/MS	EPA 8270C/D	n-Nitrosodimethylamine
GC/MS	EPA 8270C/D	n-Nitroso-di-n-butylamine
GC/MS	EPA 8270C/D	n-Nitrosodi-n-propylamine

Solid and Chemical Waste		
Technology	**Method**	**Analyte**
GC/MS	EPA 8270C/D	n-Nitrosodiphenylamine
GC/MS	EPA 8270C/D	n-Nitrosomethylethylamine
GC/MS	EPA 8270C/D	n-Nitrosomorpholine
GC/MS	EPA 8270C/D	n-Nitrosopiperidine
GC/MS	EPA 8270C/D	n-Nitrosopyrrolidine
GC/MS	EPA 8270C/D	O, O, O-Triethyl phosphorothioate
GC/MS	EPA 8270C/D	o,o-Diethyl o-2-pyrazinyl phosphorothioate
GC/MS	EPA 8270C/D	o-Toluidine
GC/MS	EPA 8270C/D	Pentachlorobenzene
GC/MS	EPA 8270C/D	Pentachloronitrobenzene
GC/MS	EPA 8270C/D	Pentachlorophenol
GC/MS	EPA 8270C/D	Phenacetin
GC/MS	EPA 8270C/D	Phenanthrene
GC/MS	EPA 8270C/D	Phenol
GC/MS	EPA 8270C/D	Phorate
GC/MS	EPA 8270C/D	Pronamide
GC/MS	EPA 8270C/D	Pyrene
GC/MS	EPA 8270C/D	Pyridine
GC/MS	EPA 8270C/D	Safrole
GC/MS	EPA 8270C/D	Sulfotepp
GC/MS	EPA 8270C/D	Thionazin
GC/MS	EPA 8270C/D SIM	1,1'-Biphenyl
GC/MS	EPA 8270C/D SIM	1,2,4,5-Tetrachlorobenzene
GC/MS	EPA 8270C/D SIM	1,4-Dioxane
GC/MS	EPA 8270C/D SIM	1-Methylnaphthalene
GC/MS	EPA 8270C/D SIM	2,2'-Oxybis(1-chloropropane
GC/MS	EPA 8270C/D SIM	2,3,4,6-Tetrachlorophenol
GC/MS	EPA 8270C/D SIM	2,4,5-Trichlorophenol
GC/MS	EPA 8270C/D SIM	2,4,6-Trichlorophenol
GC/MS	EPA 8270C/D SIM	2,4-Dichlorophenol
GC/MS	EPA 8270C/D SIM	2,4-Dimethylphenol

Solid and Chemical Waste		
Technology	**Method**	**Analyte**
GC/MS	EPA 8270C/D SIM	2,4-Dinitrophenol
GC/MS	EPA 8270C/D SIM	2,4-Dinitrotoluene
GC/MS	EPA 8270C/D SIM	2,6-Dinitrotoluene
GC/MS	EPA 8270C/D SIM	2-Chloronaphthalene
GC/MS	EPA 8270C/D SIM	2-Chlorophenol
GC/MS	EPA 8270C/D SIM	2-Methylnaphthalene
GC/MS	EPA 8270C/D SIM	2-Methylphenol
GC/MS	EPA 8270C/D SIM	2-Nitroaniline
GC/MS	EPA 8270C/D SIM	2-Nitrophenol
GC/MS	EPA 8270C/D SIM	3&4-Methylphenol
GC/MS	EPA 8270C/D SIM	3,3'-Dichlorobenzidine
GC/MS	EPA 8270C/D SIM	3-Nitroaniline
GC/MS	EPA 8270C/D SIM	4,6-Dinitro-2-methylphenol
GC/MS	EPA 8270C/D SIM	4-Bromophenyl-phenylether
GC/MS	EPA 8270C/D SIM	4-Chloro-3-methylphenol
GC/MS	EPA 8270C/D SIM	4-Chloroaniline
GC/MS	EPA 8270C/D SIM	4-Chlorophenyl-phenylether
GC/MS	EPA 8270C/D SIM	4-Nitroaniline
GC/MS	EPA 8270C/D SIM	4-Nitrophenol
GC/MS	EPA 8270C/D SIM	Acenaphthene
GC/MS	EPA 8270C/D SIM	Acenaphthylene
GC/MS	EPA 8270C/D SIM	Acetophenone
GC/MS	EPA 8270C/D SIM	Anthracene
GC/MS	EPA 8270C/D SIM	Atrazine
GC/MS	EPA 8270C/D SIM	Benzaldehyde
GC/MS	EPA 8270C/D SIM	Benzo(a)anthracene
GC/MS	EPA 8270C/D SIM	Benzo(a)pyrene
GC/MS	EPA 8270C/D SIM	Benzo(b)fluoranthene
GC/MS	EPA 8270C/D SIM	Benzo(g,h,i)perylene
GC/MS	EPA 8270C/D SIM	Benzo(k)fluoranthene
GC/MS	EPA 8270C/D SIM	Bis(2-chloroethoxy)methane

Solid and Chemical Waste		
Technology	**Method**	**Analyte**
GC/MS	EPA 8270C/D SIM	Bis(2-chloroethyl)ether
GC/MS	EPA 8270C/D SIM	Bis(2-ethylhexyl)phthalate
GC/MS	EPA 8270C/D SIM	Butylbenzylphthalate
GC/MS	EPA 8270C/D SIM	Caprolactam
GC/MS	EPA 8270C/D SIM	Carbazole
GC/MS	EPA 8270C/D SIM	Chrysene
GC/MS	EPA 8270C/D SIM	Dibenzo(a,h)anthracene
GC/MS	EPA 8270C/D SIM	Dibenzofuran
GC/MS	EPA 8270C/D SIM	Diethylphthalate
GC/MS	EPA 8270C/D SIM	Dimethyl phthalate
GC/MS	EPA 8270C/D SIM	Di-n-butylphthalate
GC/MS	EPA 8270C/D SIM	Di-n-octylphthalate
GC/MS	EPA 8270C/D SIM	Fluoranthene
GC/MS	EPA 8270C/D SIM	Fluorene
GC/MS	EPA 8270C/D SIM	Hexachlorobenzene
GC/MS	EPA 8270C/D SIM	Hexachlorobutadiene
GC/MS	EPA 8270C/D SIM	Hexachlorocyclopentadiene
GC/MS	EPA 8270C/D SIM	Hexachloroethane
GC/MS	EPA 8270C/D SIM	Indeno(1,2,3-cd)pyrene
GC/MS	EPA 8270C/D SIM	Isophorone
GC/MS	EPA 8270C/D SIM	Naphthalene
GC/MS	EPA 8270C/D SIM	Nitrobenzene
GC/MS	EPA 8270C/D SIM	n-Nitroso-di-n-propylamine
GC/MS	EPA 8270C/D SIM	n-Nitrosodiphenylamine
GC/MS	EPA 8270C/D SIM	Pentachlorophenol
GC/MS	EPA 8270C/D SIM	Phenanthrene
GC/MS	EPA 8270C/D SIM	Phenol
GC/MS	EPA 8270C/D SIM	Pyrene
HPLC/UV	EPA 8330A	1 ,3, 5-Trinitrobenzene
HPLC/UV	EPA 8330A	1, 3-Dinitrobenzene
HPLC/UV	EPA 8330A	2, 4, 6-Trinitrotoluene

Solid and Chemical Waste		
Technology	**Method**	**Analyte**
HPLC/UV	EPA 8330A	2, 4-Dinitrotoluene
HPLC/UV	EPA 8330A	2, 6-Dinitrotoluene
HPLC/UV	EPA 8330A	2-Amino-4, 6-dinitrotoluene
HPLC/UV	EPA 8330A	2-Nitrotoluene
HPLC/UV	EPA 8330A	3-Nitrotoluene
HPLC/UV	EPA 8330A	3,5-Dinitroaniline
HPLC/UV	EPA 8330A	4-Amino-2,6-dinitrotoluene
HPLC/UV	EPA 8330A	4-Nitrotoluene
HPLC/UV	EPA 8330A	Ethylene glycol dinitrate (EGDN)
HPLC/UV	EPA 8330A	Hexahydr-1, 3, 5-trinitro-1, 3, 5-triazine (RDX)
HPLC/UV	EPA 8330A	Nitrobenzene
HPLC/UV	EPA 8330A MOD	Nitroglycerin
HPLC/UV	EPA 8330A	Octahydro-1, 3, 5, 7-tetrazocine (HMX)
HPLC/UV	EPA 8330A	Pentaerythritol Tetranitrate (PETN)
HPLC/UV	EPA 8330A	Tetryl
HPLC/UV	8330B (W/O Soil Grinding)	1, 3, 5-Trinitrobenzene
HPLC/UV	8330B (W/O Soil Grinding)	1, 3-Dinitrobenzene
HPLC/UV	8330B (W/O Soil Grinding)	2, 4, 6-Trinitrotoluene
HPLC/UV	8330B (W/O Soil Grinding)	2, 4-Dinitrotoluene
HPLC/UV	8330B (W/O Soil Grinding)	2, 6-Dinitrotoluene
HPLC/UV	8330B (W/O Soil Grinding)	2-Amino-4, 6 –Dinitrotoluene
HPLC/UV	8330B (W/O Soil Grinding)	2-Nitrotoluene
HPLC/UV	8330B (W/O Soil Grinding)	3-Nitrotoluene
HPLC/UV	8330B (W/O Soil Grinding)	3,5-Dinitroaniline
HPLC/UV	8330B (W/O Soil Grinding)	4-Amino-2,3-Dinitrotoluene
HPLC/UV	8330B (W/O Soil Grinding)	4-Nitrotoluene
HPLC/UV	8330B (W/O Soil Grinding)	Ethylene glycol dinitrate (EGDN)
HPLC/UV	8330B (W/O Soil Grinding)	Hexahydr-1, 3, 5-trinitro-1, 3, 5-triazine (RDX)
HPLC/UV	8330B (W/O Soil Grinding)	Nitrobenzene
HPLC/UV	8330B (W/O Soil Grinding)	Nitroglycerin
HPLC/UV	8330B (W/O Soil Grinding)	Octahydro-1, 3, 5, 7-tetrazocine (HMX)

Solid and Chemical Waste		
Technology	**Method**	**Analyte**
HPLC/UV	8330B (W/O Soil Grinding)	Pentaerythritol Tetranitrate (PETN)
HPLC/UV	8330B (W/O Soil Grinding)	Tetryl
CVAA	EPA 7471B	Mercury
CVAF	EPA 1631E	Low Level Mercury
ICP/AES	EPA 6010B/C	Aluminum
ICP/AES	EPA 6010B/C	Antimony
ICP/AES	EPA 6010B/C	Arsenic
ICP/AES	EPA 6010B/C	Barium
ICP/AES	EPA 6010B/C	Beryllium
ICP/AES	EPA 6010B/C	Boron
ICP/AES	EPA 6010B/C	Cadmium
ICP/AES	EPA 6010B/C	Calcium
ICP/AES	EPA 6010B/C	Chromium
ICP/AES	EPA 6010B/C	Cobalt
ICP/AES	EPA 6010B/C	Copper
ICP/AES	EPA 6010B/C	Iron
ICP/AES	EPA 6010B/C	Lead
ICP/AES	EPA 6010B/C	Magnesium
ICP/AES	EPA 6010B/C	Manganese
ICP/AES	EPA 6010B/C	Molybdenum
ICP/AES	EPA 6010B/C	Nickel
ICP/AES	EPA 6010B/C	Potassium
ICP/AES	EPA 6010B/C	Selenium
ICP/AES	EPA 6010B/C	Silicon
ICP/AES	EPA 6010B/C	Silver
ICP/AES	EPA 6010B/C	Sodium
ICP/AES	EPA 6010B/C	Strontium
ICP/AES	EPA 6010B/C	Thallium
ICP/AES	EPA 6010B/C	Tin
ICP/AES	EPA 6010B/C	Titanium
ICP/AES	EPA 6010B/C	Vanadium

Solid and Chemical Waste		
Technology	**Method**	**Analyte**
ICP/AES	EPA 6010B/C	Zinc
ICP/MS	EPA 6020A	Aluminum
ICP/MS	EPA 6020A	Antimony
ICP/MS	EPA 6020A	Arsenic
ICP/MS	EPA 6020A	Barium
ICP/MS	EPA 6020A	Beryllium
ICP/MS	EPA 6020A	Boron
ICP/MS	EPA 6020A	Cadmium
ICP/MS	EPA 6020A	Calcium
ICP/MS	EPA 6020A	Chromium
ICP/MS	EPA 6020A	Cobalt
ICP/MS	EPA 6020A	Copper
ICP/MS	EPA 6020A	Iron
ICP/MS	EPA 6020A	Lead
ICP/MS	EPA 6020A	Magnesium
ICP/MS	EPA 6020A	Manganese
ICP/MS	EPA 6020A	Molybdenum
ICP/MS	EPA 6020A	Nickel
ICP/MS	EPA 6020A	Potassium
ICP/MS	EPA 6020A	Selenium
ICP/MS	EPA 6020A	Silver
ICP/MS	EPA 6020A	Sodium
ICP/MS	EPA 6020A	Strontium
ICP/MS	EPA 6020A	Thallium
ICP/MS	EPA 6020A	Tin
ICP/MS	EPA 6020A	Titanium
ICP/MS	EPA 6020A	Tungsten
ICP/MS	EPA 6020A	Vanadium
ICP/MS	EPA 6020A	Zinc
IC	EPA 9056A	Chloride
IC	EPA 9056A	Fluoride

Solid and Chemical Waste		
Technology	**Method**	**Analyte**
IC	EPA 9056A	Nitrate as N
IC	EPA 9056A	Nitrite as N
IC	EPA 9056A	Orthophosphate
IC	EPA 9056A	Sulfate
Gravimetric	EPA 9071A; EPA 9071B	Oil and Grease, Oil and Grease with SGT
Physical	EPA 1010A	Ignitability
Physical	EPA 9045D	pH
Titration	EPA SW-846 Chapter 7.3.4	Reactive Sulfide
Titration	Walkley-Black	Total Organic Carbon
IR	Lloyd Kahn	Total organic carbon
Turbidimetric	EPA 9038; ASTM 516-02	Sulfate
UV/VIS	EPA 350.1; SM 4500NH3 H	Ammonia as N
UV/VIS	EPA 9251; SM 4500Cl E	Chloride
UV/VIS	EPA SW-846 Chapter 7.3.4	Reactive Cyanide
UV/VIS	EPA 821/R-91-100	AVS-SEM
UV/VIS	SM 3500Fe D	Ferrous Iron
Cleanup Methods	EPA 3630C	Silica Gel
UV/VIS	EPA 7196	Chromium VI
UV/VIS	EPA 7196A	Chromium VI
UV/VIS	EPA 9012B	Total cyanide
Preparation	**Method**	**Type**
Preparation	EPA 1311	Toxicity Characteristic Leaching Procedure
Preparation	EPA 1312	Synthetic Precipitation Leaching Procedure
Cleanup Methods	EPA 3660B	Sulfur Clean-up
Cleanup Methods	EPA 3620C	Florsil Clean-up
Cleanup Methods	EPA 3630C	Silica Gel Clean-up
Cleanup Methods	EPA 3640A	GPC Clean-up
Organic Preparation	EPA 3540C	Soxhlet Extraction
Organic Preparation	EPA 3545A	Pressurized Fluid Extraction
Organic Preparation	EPA 3546	Microwave Extraction Preparation for EPA 8082A, 8081B and 8270C, D

Solid and Chemical Waste		
Technology	**Method**	**Analyte**
Organic Preparation	EPA 3550C	Sonication
Inorganics Preparation	EPA 3050B	Hotblock
Inorganics Preparation	EPA 3060A	Alkaline Digestion
Volatile Organics Preparation	EPA 5035/5035A	Closed System Purge and Trap

Air		
Technology	**Method**	**Analyte**
GC/MS	EPA TO-15	Propene
GC/MS	EPA TO-15	1, 1, 1-Trichloroethane
GC/MS	EPA TO-15	1, 1, 2, 2-Tetrachloroethane
GC/MS	EPA TO-15	1, 1, 2-Trichloroethane
GC/MS	EPA TO-15	1, 1-Dichloroethane
GC/MS	EPA TO-15	1, 1-Dichloroethylene
GC/MS	EPA TO-15	1, 2, 4-Trichlorobenzene
GC/MS	EPA TO-15	1, 2, 4-Trimethylbenzene
GC/MS	EPA TO-15	1, 2-Dibromoethane (EDB)
GC/MS	EPA TO-15	1,2-Dichloro-1,1,2,2-tetrafluoroethane (Freon 114)
GC/MS	EPA TO-15	1, 2-Dichlorobenzene
GC/MS	EPA TO-15	1, 2-Dichloroethane
GC/MS	EPA TO-15	1, 2-Dichloroethenes (Total)
GC/MS	EPA TO-15	1, 2-Dichloropropane
GC/MS	EPA TO-15	1, 3, 5-Trimethylbenzene
GC/MS	EPA TO-15	1, 3-Butadiene
GC/MS	EPA TO-15	1, 3-Dichlorobenzene
GC/MS	EPA TO-15	1, 4-Dichlorobenzene
GC/MS	EPA TO-15	1,4-Difluorobenzene
GC/MS	EPA TO-15	1, 4-Dioxane
GC/MS	EPA TO-15	2-Butanone
GC/MS	EPA TO-15	2-Hexanone
GC/MS	EPA TO-15	2-Propanol

Air		
Technology	**Method**	**Analyte**
GC/MS	EPA TO-15	4-Ethyltoluene
GC/MS	EPA TO-15	4-Methyl-2-pentanone
GC/MS	EPA TO-15	Acetone
GC/MS	EPA TO-15	Acrolein
GC/MS	EPA TO-15	Benzene
GC/MS	EPA TO-15	Benzyl chloride
GC/MS	EPA TO-15	Bromochloromethane
GC/MS	EPA TO-15	Bromodichloromethane
GC/MS	EPA TO-15	Bromoform
GC/MS	EPA TO-15	Carbon disulfide
GC/MS	EPA TO-15	Carbon tetrachloride
GC/MS	EPA TO-15	Chlorobenzene
GC/MS	EPA TO-15	Chloroethane
GC/MS	EPA TO-15	Chloroform
GC/MS	EPA TO-15	Cis-1, 2-Dichloroethene
GC/MS	EPA TO-15	Cis-1, 3-Dichloropropene
GC/MS	EPA TO-15	Cyclohexane
GC/MS	EPA TO-15	Dibromochloromethane
GC/MS	EPA TO-15	Dichlorodifluoromethane (Freon 12)
GC/MS	EPA TO-15	Ethanol
GC/MS	EPA TO-15	Ethyl acetate
GC/MS	EPA TO-15	Ethylbenzene
GC/MS	EPA TO-15	Hexachlorobutadiene
GC/MS	EPA TO-15	Isopropyl alcohol
GC/MS	EPA TO-15	m, p-Xylene
GC/MS	EPA TO-15	Methyl bromide (Bromomethane)
GC/MS	EPA TO-15	Methyl chloride (Chloromethane)
GC/MS	EPA TO-15	Methyl methacrylate
GC/MS	EPA TO-15	Methyl tert-butyl ether
GC/MS	EPA TO-15	Methylene chloride
GC/MS	EPA TO-15	Naphthalene

Air		
Technology	**Method**	**Analyte**
GC/MS	EPA TO-15	n-Heptane
GC/MS	EPA TO-15	n-Hexane
GC/MS	EPA TO-15	o-Xylene
GC/MS	EPA TO-15	Styrene
GC/MS	EPA TO-15	Tetrachloroethylene (Perchloroethylene)
GC/MS	EPA TO-15	Tetrahydrofuran
GC/MS	EPA TO-15	Toluene
GC/MS	EPA TO-15	trans-1, 2-Dichloroethylene
GC/MS	EPA TO-15	trans-1, 3-Dichloropropylene
GC/MS	EPA TO-15	Trichloroethene (Trichloroethylene)
GC/MS	EPA TO-15	Trichlorofluoromethane (Freon 11)
GC/MS	EPA TO-15	1,1,2-Trichloro1,2,2-trifluoroethane (Freon 113)
GC/MS	EPA TO-15	Vinyl acetate
GC/MS	EPA TO-15	Vinyl chloride
GC/MS	EPA TO-15	Xylenes (Total)
GC/MS	MA DEP APH	Aliphatic C5-C8 range
GC/MS	MA DEP APH	Aliphatic C9-C12 range
GC/MS	MA DEP APH	Aromatic C9-C10 range
GC/MS	MA DEP APH	1,3-Butadiene
GC/MS	MA DEP APH	Benzene
GC/MS	MA DEP APH	Ethylbenzene
GC/MS	MA DEP APH	m+p-Xylene
GC/MS	MA DEP APH	Methyl tert-butyl ether
GC/MS	MA DEP APH	Naphthalene
GC/MS	MA DEP APH	o-Xylene
GC/MS	MA DEP APH	Toluene

LABORATORY ACCREDITATION BUREAU

Certificate # L2223

Notes:

1) This laboratory offers commercial testing service.

Approved by: _____

R. Douglas Leonard
Chief Technical Officer

Date: November 19, 2013

Re-issued: 2/1/13 Revised: 3/13/13 Revised: 11/19/13

Declaration of Conformance to the Department of Defense Quality Systems Manual for Environmental Laboratories Version 4.2 (DoD QSM)

Environmental laboratories performing services for the Department of Defense must possess any required state or host nation certification and/or be accredited for each applicable test method by a nationally recognized laboratory accreditation body (e.g. NELAP) compliant with ISO/IEC 17011:2004. The laboratory must demonstrate the ability to generate acceptable results from the analysis of proficiency-testing (PT) sample(s), subject to availability, using each applicable method in the specified matrix. Upon request, laboratories must make available, to the Department of Defense, the results of all PT samples analyzed by the laboratory during the contract-specified period of performance. Laboratories must have an established and documented laboratory quality system that conforms to ISO/IEC 17025 as implemented by the *DoD Quality Systems Manual for Environmental Laboratories*,[insert appropriate version number. [This document may be downloaded free of charge at https://www.denix.osd.mil/denix/Public/Library/Compliance/EDQW/admin.html. The laboratory must declare conformance to the DoD QSM using this form and must submit a copy of its laboratory quality manual (however named) to an authorized representative of the Department of Defense. All laboratories are subject to on-site assessments by authorized representatives of the Department of Defense. The laboratory must notify the Department of Defense, in writing, of any change in laboratory certification or accreditation status within 30 calendar days of the change.

Laboratory Information

Laboratory Name:	Katahdin Analytical Services
Address:	600 Technology Way Scarborough, Maine 04074

Point of Contact:	Ms. Leslie Dimond
Title:	Quality Assurance Officer
Email:	ldimond@katahdinlab.com
Phone:	(207)874-2400
Fax:	(207)775-4029

Title, date of laboratory quality manual

Quality Assurance Manual, Revision 10, August 2011.

List analytes/analyte groups, matrices, methods for which this declaration applies:

Please refer to the attached bid sheet.

Identify laboratory standard operating procedures (SOPs) for which this declaration applies (include number, title and date of last revision):

Please refer to the attached SOP list.

1. Quality System
    a. Does the laboratory quality manual meet the requirements of DoD QSM Sections 4.2.2, 4.2.3, and 4.2.4? Yes

    b. Do laboratory SOPs meet the requirements of DoD QSM Section 5.4.1? Yes

    c. Are laboratory records controlled in accordance with the requirements of DoD QSM Section 4.12? Yes

    d. Do your laboratory personnel structure and lines of responsibility meet the requirements of DoD QSM Section 4.1.5? Yes

    e. Does your laboratory Quality Manager meet requirements of DoD QSM Section 4.1.5(i)? Yes

    f. Does your laboratory perform internal audits, management reviews, and corrective action in accordance with DoD QSM Sections 4.13, 4.14, and 4.10? Yes

2. Training and Ethics
    a. Does your laboratory's technical training program meet the requirements of DoD QSM Section 5.2.6? Yes

    b. Does your laboratory ethics program comply with the requirements of DoD QSM Section 5.2.7? Yes

3. Proficiency Testing
    a. List all proficiency testing programs (e.g. UST, DMRQA) in which your laboratory participates that are relevant to the analytes/analyte groups, matrices, and methods included in the scope of this declaration: WS, WP, S/HW, and UST PT studies.

4. Resources
    a. Does your laboratory have adequate personnel, facilities, equipment, instrumentation, and other resources available, as required in DoD QSM Sections 5.2.1, 5.3.1, and 5.5, to perform the tests specified in this declaration? Yes.

5. Please list any concerns/comments regarding conformance to the DoD QSM: Katahdin will make every effort to meet our clients' data quality objectives.

The undersigned acknowledge the accuracy and correctness of this declaration. The undersigned acknowledge that laboratory engagement in any prohibited practice identified in Attachment 3a will be considered material non-compliance, which may result in contract termination or other remedies as appropriate.

Laboratory Quality Manager: Leslie Dimond
Signature: Leslie Dimond
Date: 01.09.12

Laboratory's Authorized Contract Representative: Deborah J. Nadeau
Signature: Deborah J. Nadeau
Date: 01.09.12

Attachment 1a
Prohibited Practices (Involving Environmental Sampling and Testing Activities)

The following prohibited practices will be considered material non-compliance, which may result in contract termination or other remedies as appropriate.

- Fabrication, falsification, or misrepresentation of data
  - Creating data for an analysis that was not performed
  - Creating information for a sample that was not collected
  - Using external analysts, equipment and/or laboratories to perform analyses when not allowed by contract
- Improper clock setting (time traveling) or improper date/time recording
  - Resetting the internal clock on an instrument to make it appear that a sample was analyzed within holding time when in fact it was not
  - Changing the actual time or recording a false time to make it appear that holding times were met, or changing the times for sample collection, extractions or other steps to make it appear that holding times were met
- Unwarranted manipulation of samples, software, or analytical conditions
  - Unjustified dilution of samples
  - Manipulating GC/MS tuning data to produce an ion abundance result that appears to meet specific QC criteria
  - Changing the instrument conditions for sample analysis from the conditions used for standard analysis (e.g., changing EM voltage)
  - Unwarranted manipulation of computer software, e.g. forcing calibration or QC data to meet criteria, removing computer operational codes such as the "M" flag, inappropriately subtracting background, or improperly manipulating the chromatographic baseline
  - Turning off, or otherwise disabling, electronic instrument audit/tracking functions
- Misrepresenting or misreporting QC samples
  - Representing spiked samples as being digested or extracted when this has not been done
  - Substituting previously generated runs for a non-compliant calibration or QC run to make it appear that an acceptable run was performed
  - Failing to prepare or analyze method blanks and LCS in the same manner that samples were prepared or analyzed
  - Tampering with QC samples and results, including over spiking and adding surrogates after sample extraction
  - Performing multiple calibrations or QC runs (including CCVs, LCSs, spikes, duplicates and blanks) until one meets criteria, rather than taking needed corrective action, and not documenting or retaining data for the other unacceptable data
  - Deleting or failing to record non-compliant QC data to conceal the fact that calibration or other QC analyses were non-compliant
- Improper calibrations
  - Discarding points in the initial calibration to force the calibration to be acceptable
  - Discarding points from an MDL study to force the calculated MDL to be higher or lower than the actual value
  - Using an initial calibration that does not correspond to the actual run sequence to make continuing calibration data look acceptable when in fact it was not
  - Performing improper manual integrations, including peak shaving, peak enhancing, or baseline manipulation to achieve QC criteria or to avoid corrective action
- Concealing a known analytical or sample problem
- Concealing a known improper or unethical behavior or action
- Failing to report the occurrence of a prohibited practice or known improper or unethical act to the appropriate laboratory or contract representative, or to an appropriate government official.

COMMONWEALTH OF VIRGINIA
DEPARTMENT OF GENERAL SERVICES
DIVISION OF CONSOLIDATED LABORATORY SERVICES

Certifies that

VA Laboratory ID#: 460179
KATAHDIN ANALYTICAL SERVICES, INC.

600 TECHNOLOGY WAY
SCARBOROUGH, ME 04074

Owner: MS. DAPHNE WARREN
Operator: MS. DEBORAH NADEAU
Responsible Official: MS. DAPHNE WARRER

Having met the requirements of 1 VAC 30-46
and the National Environmental Laboratory Accreditation Conference 2003 Standard

is hereby approved as an

Accredited Laboratory

As more fully described in the attached Scope of Accreditation

Effective Date: **September 15, 2013**
Expiration Date: **September 14, 2014**
Certificate # 2457

Thomas L. York, Ph.D., HCLD
DGS Deputy Director for Laboratories

Continued accreditation status depends on successful ongoing participation in the program.
Certificate to be conspicuously displayed at the laboratory.
Not valid unless accompanied by a valid Virginia Environmental Laboratory Accreditation Program (VELAP) Scope of Accreditation.
Customers are urged to verify the laboratory's current accreditation status.

Certificate Not Transferable

Surrender Upon Revocation

Commonwealth of Virginia

Department of General Services
Division of Consolidated Laboratory Services

Scope of Accreditation

VELAP Certificate No.: 2457

KATAHDIN ANALYTICAL SERVICES, INC.
600 TECHNOLOGY WAY
SCARBOROUGH, ME 04074

Virginia Laboratory ID: 460179
Effective Date: September 15, 2013
Expiration Date: September 14, 2014

NON-POTABLE WATER

METHOD	ANALYTE	PRIMARY	METHOD	ANALYTE	PRIMARY
ASTM D516-90,02	SULFATE	NH	EPA 1010 (9/86)	FLASHPOINT	NH
EPA 120.1 1982	CONDUCTIVITY	NH	EPA 160.4 1971	RESIDUE-VOLATILE	NH
EPA 1631 E 2002	MERCURY	NH	EPA 1664 A 1999	OIL & GREASE	NH
EPA 180.1 (AS HACH 8195)	TURBIDITY	NH	EPA 200.7 1994 4.4	ALUMINUM	NH
EPA 200.7 1994 4.4	ANTIMONY	NH	EPA 200.7 1994 4.4	ARSENIC	NH
EPA 200.7 1994 4.4	BARIUM	NH	EPA 200.7 1994 4.4	BERYLLIUM	NH
EPA 200.7 1994 4.4	BORON	NH	EPA 200.7 1994 4.4	CADMIUM	NH
EPA 200.7 1994 4.4	CALCIUM	NH	EPA 200.7 1994 4.4	CHROMIUM	NH
EPA 200.7 1994 4.4	COBALT	NH	EPA 200.7 1994 4.4	COPPER	NH
EPA 200.7 1994 4.4	IRON	NH	EPA 200.7 1994 4.4	LEAD	NH
EPA 200.7 1994 4.4	MAGNESIUM	NH	EPA 200.7 1994 4.4	MANGANESE	NH
EPA 200.7 1994 4.4	MOLYBDENUM	NH	EPA 200.7 1994 4.4	NICKEL	NH
EPA 200.7 1994 4.4	POTASSIUM	NH	EPA 200.7 1994 4.4	SELENIUM	NH
EPA 200.7 1994 4.4	SILICA AS SIO2	NH	EPA 200.7 1994 4.4	SILVER	NH
EPA 200.7 1994 4.4	SODIUM	NH	EPA 200.7 1994 4.4	THALLIUM	NH
EPA 200.7 1994 4.4	TIN	NH	EPA 200.7 1994 4.4	TOTAL HARDNESS AS CACO3	NH
EPA 200.7 1994 4.4	VANADIUM	NH	EPA 200.7 1994 4.4	ZINC	NH
EPA 200.8 1994 5.4	ALUMINUM	NH	EPA 200.8 1994 5.4	ANTIMONY	NH
EPA 200.8 1994 5.4	ARSENIC	NH	EPA 200.8 1994 5.4	BARIUM	NH
EPA 200.8 1994 5.4	BERYLLIUM	NH	EPA 200.8 1994 5.4	CADMIUM	NH
EPA 200.8 1994 5.4	CHROMIUM	NH	EPA 200.8 1994 5.4	COBALT	NH
EPA 200.8 1994 5.4	COPPER	NH	EPA 200.8 1994 5.4	LEAD	NH
EPA 200.8 1994 5.4	MANGANESE	NH	EPA 200.8 1994 5.4	MOLYBDENUM	NH
EPA 200.8 1994 5.4	NICKEL	NH	EPA 200.8 1994 5.4	SELENIUM	NH
EPA 200.8 1994 5.4	SILVER	NH	EPA 200.8 1994 5.4	THALLIUM	NH
EPA 200.8 1994 5.4	VANADIUM	NH	EPA 200.8 1994 5.4	ZINC	NH
EPA 200.8 - EXTENDED 1994 5.4	BORON	NH	EPA 200.8 - EXTENDED 1994 5.4	TIN	NH
EPA 245.1 1994 3	MERCURY	NH	EPA 300.0 1993 2.1	BROMIDE	NH
EPA 300.0 1993 2.1	CHLORIDE	NH	EPA 300.0 1993 2.1	NITRATE AS N	NH
EPA 300.0 1993 2.1	NITRATE/NITRITE	NH	EPA 300.0 1993 2.1	NITRITE AS N	NH
EPA 300.0 1993 2.1	ORTHOPHOSPHATE AS P	NH	EPA 300.0 1993 2.1	SULFATE	NH
EPA 335.4 1993	CYANIDE	NH	EPA 350.1 1993 2	AMMONIA AS N	NH
EPA 351.1 1978	KJELDAHL NITROGEN - TOTAL	NH	EPA 353.2 1993 2	NITRATE AS N	NH
EPA 353.2 1993 2	NITRATE/NITRITE	NH	EPA 353.2 1993 2	NITRITE AS N	NH
EPA 365.1 1993 2	ORTHOPHOSPHATE AS P	NH	EPA 365.4 1974	PHOSPHORUS, TOTAL	NH
EPA 410.4 1993 2	CHEMICAL OXYGEN DEMAND	NH	EPA 420.1 1978	TOTAL PHENOLICS	NH
EPA 6010 B 1996	ALUMINUM	NH	EPA 6010 B 1996	ANTIMONY	NH

Commonwealth of Virginia

Department of General Services
Division of Consolidated Laboratory Services

Scope of Accreditation

VELAP Certificate No.: 2457

KATAHDIN ANALYTICAL SERVICES, INC.
600 TECHNOLOGY WAY
SCARBOROUGH, ME 04074

Virginia Laboratory ID: 460179
Effective Date: September 15, 2013
Expiration Date: September 14, 2014

NON-POTABLE WATER

METHOD	ANALYTE	PRIMARY	METHOD	ANALYTE	PRIMARY
EPA 6010 B 1996	ARSENIC	NH	EPA 6010 B 1996	BARIUM	NH
EPA 6010 B 1996	BERYLLIUM	NH	EPA 6010 B 1996	BORON	NH
EPA 6010 B 1996	CADMIUM	NH	EPA 6010 B 1996	CALCIUM	NH
EPA 6010 B 1996	CHROMIUM	NH	EPA 6010 B 1996	COBALT	NH
EPA 6010 B 1996	COPPER	NH	EPA 6010 B 1996	IRON	NH
EPA 6010 B 1996	LEAD	NH	EPA 6010 B 1996	MAGNESIUM	NH
EPA 6010 B 1996	MANGANESE	NH	EPA 6010 B 1996	MOLYBDENUM	NH
EPA 6010 B 1996	NICKEL	NH	EPA 6010 B 1996	POTASSIUM	NH
EPA 6010 B 1996	SELENIUM	NH	EPA 6010 B 1996	SILVER	NH
EPA 6010 B 1996	SODIUM	NH	EPA 6010 B 1996	THALLIUM	NH
EPA 6010 B 1996	TIN	NH	EPA 6010 B 1996	VANADIUM	NH
EPA 6010 B 1996	ZINC	NH	EPA 6010 C 2007	ALUMINUM	NH
EPA 6010 C 2007	ANTIMONY	NH	EPA 6010 C 2007	ARSENIC	NH
EPA 6010 C 2007	BARIUM	NH	EPA 6010 C 2007	BERYLLIUM	NH
EPA 6010 C 2007	BORON	NH	EPA 6010 C 2007	CALCIUM	NH
EPA 6010 C 2007	CHROMIUM	NH	EPA 6010 C 2007	COBALT	NH
EPA 6010 C 2007	COPPER	NH	EPA 6010 C 2007	IRON	NH
EPA 6010 C 2007	LEAD	NH	EPA 6010 C 2007	MAGNESIUM	NH
EPA 6010 C 2007	MANGANESE	NH	EPA 6010 C 2007	MOLYBDENUM	NH
EPA 6010 C 2007	NICKEL	NH	EPA 6010 C 2007	POTASSIUM	NH
EPA 6010 C 2007	SELENIUM	NH	EPA 6010 C 2007	SILVER	NH
EPA 6010 C 2007	SODIUM	NH	EPA 6010 C 2007	THALLIUM	NH
EPA 6010 C 2007	TIN	NH	EPA 6010 C 2007	VANADIUM	NH
EPA 6010 C 2007	ZINC	NH	EPA 6020 A (2/07)	ALUMINUM	NH
EPA 6020 A (2/07)	ANTIMONY	NH	EPA 6020 A (2/07)	ARSENIC	NH
EPA 6020 A (2/07)	BARIUM	NH	EPA 6020 A (2/07)	BERYLLIUM	NH
EPA 6020 A (2/07)	CADMIUM	NH	EPA 6020 A (2/07)	CALCIUM	NH
EPA 6020 A (2/07)	CHROMIUM	NH	EPA 6020 A (2/07)	COBALT	NH
EPA 6020 A (2/07)	COPPER	NH	EPA 6020 A (2/07)	LEAD	NH
EPA 6020 A (2/07)	MANGANESE	NH	EPA 6020 A (2/07)	NICKEL	NH
EPA 6020 A (2/07)	SELENIUM	NH	EPA 6020 A (2/07)	SILVER	NH
EPA 6020 A (2/07)	THALLIUM	NH	EPA 6020 A (2/07)	VANADIUM	NH
EPA 6020 A (2/07)	ZINC	NH	EPA 6020 A - EXTENDED (2/07)	MOLYBDENUM	NH
EPA 608	4,4'-DDD	NH	EPA 608	4,4'-DDE	NH
EPA 608	4,4'-DDT	NH	EPA 608	ALDRIN	NH
EPA 608	ALPHA-BHC (ALPHA-HEXACHLOROCYCLOHEXANE)	NH	EPA 608	AROCLOR-1016 (PCB-1016)	NH
EPA 608	AROCLOR-1221 (PCB-1221)	NH	EPA 608	AROCLOR-1232 (PCB-1232)	NH

Commonwealth of Virginia

Department of General Services
Division of Consolidated Laboratory Services

Scope of Accreditation

VELAP Certificate No.: 2457

KATAHDIN ANALYTICAL SERVICES, INC.
600 TECHNOLOGY WAY
SCARBOROUGH, ME 04074

Virginia Laboratory ID: 460179
Effective Date: September 15, 2013
Expiration Date: September 14, 2014

NON-POTABLE WATER

METHOD	ANALYTE	PRIMARY	METHOD	ANALYTE	PRIMARY
EPA 608	AROCLOR-1242 (PCB-1242)	NH	EPA 608	AROCLOR-1248 (PCB-1248)	NH
EPA 608	AROCLOR-1254 (PCB-1254)	NH	EPA 608	AROCLOR-1260 (PCB-1260)	NH
EPA 608	BETA-BHC (BETA-HEXACHLOROCYCLOHEXANE)	NH	EPA 608	CHLORDANE (TECH.)	NH
EPA 608	DELTA-BHC	NH	EPA 608	DIELDRIN	NH
EPA 608	ENDOSULFAN I	NH	EPA 608	ENDOSULFAN II	NH
EPA 608	ENDOSULFAN SULFATE	NH	EPA 608	ENDRIN	NH
EPA 608	ENDRIN ALDEHYDE	NH	EPA 608	GAMMA-BHC (LINDANE, GAMMA-HEXACHLOROCYCLOHEXANE)	NH
EPA 608	HEPTACHLOR	NH	EPA 608	HEPTACHLOR EPOXIDE	NH
EPA 608	TOXAPHENE (CHLORINATED CAMPHENE)	NH	EPA 624	1,1,1-TRICHLOROETHANE	NH
EPA 624	1,1,2,2-TETRACHLOROETHANE	NH	EPA 624	1,1,2-TRICHLOROETHANE	NH
EPA 624	1,1-DICHLOROETHANE	NH	EPA 624	1,2-DICHLOROBENZENE	NH
EPA 624	1,2-DICHLOROETHANE (ETHYLENE DICHLORIDE)	NH	EPA 624	1,2-DICHLOROPROPANE	NH
EPA 624	1,3-DICHLOROBENZENE	NH	EPA 624	1,4-DICHLOROBENZENE	NH
EPA 624	2-CHLOROETHYL VINYL ETHER	NH	EPA 624	ACROLEIN (PROPENAL)	NH
EPA 624	ACRYLONITRILE	NH	EPA 624	BENZENE	NH
EPA 624	BROMODICHLOROMETHANE	NH	EPA 624	BROMOFORM	NH
EPA 624	CARBON TETRACHLORIDE	NH	EPA 624	CHLOROBENZENE	NH
EPA 624	CHLORODIBROMOMETHANE	NH	EPA 624	CHLOROETHANE (ETHYL CHLORIDE)	NH
EPA 624	CHLOROFORM	NH	EPA 624	CIS-1,3-DICHLOROPROPENE	NH
EPA 624	ETHYLBENZENE	NH	EPA 624	METHYL BROMIDE (BROMOMETHANE)	NH
EPA 624	METHYL CHLORIDE (CHLOROMETHANE)	NH	EPA 624	METHYLENE CHLORIDE (DICHLOROMETHANE)	NH
EPA 624	TETRACHLOROETHENE (PERCHLOROETHENE)	NH	EPA 624	TOLUENE	NH
EPA 624	TRANS-1,2-DICHLOROETHENE	NH	EPA 624	TRANS-1,3-DICHLOROPROPENE	NH
EPA 624	TRICHLOROETHENE (TRICHLOROETHYLENE)	NH	EPA 624	TRICHLOROFLUOROMETHANE (FLUOROTRICHLOROMETHANE, FREON 11)	NH
EPA 624	VINYL CHLORIDE	NH	EPA 624 - EXTENDED	1,1-DICHLOROETHYLENE	NH
EPA 625 1982	1,2,4-TRICHLOROBENZENE	NH	EPA 625 1982	2,4,6-TRICHLOROPHENOL	NH
EPA 625 1982	2,4-DICHLOROPHENOL	NH	EPA 625 1982	2,4-DIMETHYLPHENOL	NH
EPA 625 1982	2,4-DINITROPHENOL	NH	EPA 625 1982	2,4-DINITROTOLUENE (2,4-DNT)	NH
EPA 625 1982	2,6-DINITROTOLUENE (2,6-DNT)	NH	EPA 625 1982	2-CHLORONAPHTHALENE	NH
EPA 625 1982	2-CHLOROPHENOL	NH	EPA 625 1982	2-METHYL-4,6-DINITROPHENOL (4,6-DINITRO-2-METHYLPHENOL)	NH
EPA 625 1982	2-NITROPHENOL	NH	EPA 625 1982	3,3'-DICHLOROBENZIDINE	NH

Commonwealth of Virginia

Department of General Services
Division of Consolidated Laboratory Services

Scope of Accreditation

VELAP Certificate No.: 2457

KATAHDIN ANALYTICAL SERVICES, INC.
600 TECHNOLOGY WAY
SCARBOROUGH, ME 04074

Virginia Laboratory ID: 460179
Effective Date: September 15, 2013
Expiration Date: September 14, 2014

NON-POTABLE WATER

METHOD	ANALYTE	PRIMARY
EPA 625 1982	4-CHLORO-3-METHYLPHENOL	NH
EPA 625 1982	4-NITROPHENOL	NH
EPA 625 1982	ACENAPHTHYLENE	NH
EPA 625 1982	BENZIDINE	NH
EPA 625 1982	BENZO(A)PYRENE	NH
EPA 625 1982	BENZO(K)FLUORANTHENE	NH
EPA 625 1982	BIS(2-CHLOROETHOXY)METHANE	NH
EPA 625 1982	BIS(2-CHLOROISOPROPYL) ETHER	NH
EPA 625 1982	BUTYL BENZYL PHTHALATE	NH
EPA 625 1982	DI-N-BUTYL PHTHALATE	NH
EPA 625 1982	DIBENZO(A,H) ANTHRACENE	NH
EPA 625 1982	DIMETHYL PHTHALATE	NH
EPA 625 1982	FLUORENE	NH
EPA 625 1982	HEXACHLOROBUTADIENE (1,3-HEXACHLOROBUTADIENE)	NH
EPA 625 1982	HEXACHLOROETHANE	NH
EPA 625 1982	ISOPHORONE	NH
EPA 625 1982	N-NITROSODIMETHYLAMINE	NH
EPA 625 1982	NAPHTHALENE	NH
EPA 625 1982	PENTACHLOROPHENOL	NH
EPA 625 1982	PHENOL	NH
EPA 625 - EXTENDED 1982	4-METHYLPHENOL (P-CRESOL)	NH
EPA 7470 A 1994	MERCURY	NH
EPA 8011 (7/92)	1,2-DIBROMOETHANE (EDB, ETHYLENE DIBROMIDE)	NH
EPA 8015 C 2000	ETHANOL	NH
EPA 8015 C 2000	GASOLINE RANGE ORGANICS (GRO)	NH
EPA 8015 C 2000	ISOPROPYL ALCOHOL (2-PROPANOL, ISOPROPANOL)	NH
EPA 8015 C 2000	N-PROPANOL (1-PROPANOL)	NH
EPA 8081 B (2/07)	4,4'-DDE	NH
EPA 8081 B (2/07)	ALDRIN	NH
EPA 8081 B (2/07)	ALPHA-CHLORDANE [CIS-CHLORDANE]	NH
EPA 8081 B (2/07)	CHLORDANE (TECH.)	NH

METHOD	ANALYTE	PRIMARY
EPA 625 1982	4-CHLOROPHENYL PHENYLETHER	NH
EPA 625 1982	ACENAPHTHENE	NH
EPA 625 1982	ANTHRACENE	NH
EPA 625 1982	BENZO(A)ANTHRACENE	NH
EPA 625 1982	BENZO(G,H,I)PERYLENE	NH
EPA 625 1982	BENZO[B]FLUORANTHENE	NH
EPA 625 1982	BIS(2-CHLOROETHYL) ETHER	NH
EPA 625 1982	BIS(2-ETHYLHEXYL) PHTHALATE (DI(2-ETHYLHEXYL)PHTHALATE), (DEHP)	NH
EPA 625 1982	CHRYSENE	NH
EPA 625 1982	DI-N-OCTYL PHTHALATE	NH
EPA 625 1982	DIETHYL PHTHALATE	NH
EPA 625 1982	FLUORANTHENE	NH
EPA 625 1982	HEXACHLOROBENZENE	NH
EPA 625 1982	HEXACHLOROCYCLOPENTADIENE	NH
EPA 625 1982	INDENO(1,2,3-CD) PYRENE	NH
EPA 625 1982	N-NITROSODI-N-PROPYLAMINE	NH
EPA 625 1982	N-NITROSODIPHENYLAMINE	NH
EPA 625 1982	NITROBENZENE	NH
EPA 625 1982	PHENANTHRENE	NH
EPA 625 1982	PYRENE	NH
EPA 7196 A 1992	CHROMIUM VI	NH
EPA 8011 (7/92)	1,2-DIBROMO-3-CHLOROPROPANE (DBCP)	NH
EPA 8015 C 2000	DIESEL RANGE ORGANICS (DRO)	NH
EPA 8015 C 2000	ETHYLENE GLYCOL	NH
EPA 8015 C 2000	ISOBUTYL ALCOHOL (2-METHYL-1-PROPANOL)	NH
EPA 8015 C 2000	METHANOL	NH
EPA 8081 B (2/07)	4,4'-DDD	NH
EPA 8081 B (2/07)	4,4'-DDT	NH
EPA 8081 B (2/07)	ALPHA-BHC (ALPHA-HEXACHLOROCYCLOHEXANE)	NH
EPA 8081 B (2/07)	BETA-BHC (BETA-HEXACHLOROCYCLOHEXANE)	NH
EPA 8081 B (2/07)	DELTA-BHC	NH

Commonwealth of Virginia

Department of General Services
Division of Consolidated Laboratory Services

Scope of Accreditation

VELAP Certificate No.: 2457

KATAHDIN ANALYTICAL SERVICES, INC.
600 TECHNOLOGY WAY
SCARBOROUGH, ME 04074

Virginia Laboratory ID: 460179
Effective Date: September 15, 2013
Expiration Date: September 14, 2014

NON-POTABLE WATER

METHOD	ANALYTE	PRIMARY
EPA 8081 B (2/07)	DIELDRIN	NH
EPA 8081 B (2/07)	ENDOSULFAN II	NH
EPA 8081 B (2/07)	ENDRIN	NH
EPA 8081 B (2/07)	ENDRIN KETONE	NH
EPA 8081 B (2/07)	GAMMA-CHLORDANE [BETA-CHLORDANE, TRANS-CHLORDANE]	NH
EPA 8081 B (2/07)	HEPTACHLOR EPOXIDE	NH
EPA 8081 B (2/07)	TOXAPHENE (CHLORINATED CAMPHENE)	NH
EPA 8082 A (2/07)	2,2',3,3',4,4',5-HEPTACHLOROBIPHENYL (BZ-170)	NH
EPA 8082 A (2/07)	2,2',3,4,4',5',6-HEPTACHLOROBIPHENYL (BZ-183)	NH
EPA 8082 A (2/07)	2,2',3,4,4',5,5'-HEPTACHLOROBIPHENYL (BZ-180)	NH
EPA 8082 A (2/07)	2,2',3,5'-TETRACHLOROBIPHENYL (BZ-44)	NH
EPA 8082 A (2/07)	2,2',4,5,5'-PENTACHLOROBIPHENYL (BZ-101)	NH
EPA 8082 A (2/07)	2,2',5-TRICHLOROBIPHENYL (BZ-18)	NH
EPA 8082 A (2/07)	AROCLOR-1016 (PCB-1016)	NH
EPA 8082 A (2/07)	AROCLOR-1232 (PCB-1232)	NH
EPA 8082 A (2/07)	AROCLOR-1248 (PCB-1248)	NH
EPA 8082 A (2/07)	AROCLOR-1260 (PCB-1260)	NH
EPA 8151 A (12/96)	2,4,5-T	NH
EPA 8151 A (12/96)	2,4-DB	NH
EPA 8151 A (12/96)	DICAMBA	NH
EPA 8151 A (12/96)	DINOSEB (2-SEC-BUTYL-4,6-DINITROPHENOL, DNBP)	NH
EPA 8151 A (12/96)	MCPP	NH
EPA 8260 B 1996	1,1,1,2-TETRACHLOROETHANE	NH
EPA 8260 B 1996	1,1,2,2-TETRACHLOROETHANE	NH
EPA 8260 B 1996	1,1-DICHLOROETHANE	NH
EPA 8260 B 1996	1,1-DICHLOROPROPENE	NH
EPA 8260 B 1996	1,2,3-TRICHLOROPROPANE	NH
EPA 8260 B 1996	1,2,4-TRIMETHYLBENZENE	NH
EPA 8260 B 1996	1,2-DIBROMOETHANE (EDB, ETHYLENE DIBROMIDE)	NH

METHOD	ANALYTE	PRIMARY
EPA 8081 B (2/07)	ENDOSULFAN I	NH
EPA 8081 B (2/07)	ENDOSULFAN SULFATE	NH
EPA 8081 B (2/07)	ENDRIN ALDEHYDE	NH
EPA 8081 B (2/07)	GAMMA-BHC (LINDANE, GAMMA-HEXACHLOROCYCLOHEXANE)	NH
EPA 8081 B (2/07)	HEPTACHLOR	NH
EPA 8081 B (2/07)	METHOXYCHLOR	NH
EPA 8082 A (2/07)	2,2',3,3',4,4',5,5',6-NONACHLOROBIPHENYL (BZ-206)	NH
EPA 8082 A (2/07)	2,2',3,4',5,5',6-HEPTACHLOROBIPHENYL (BZ-187)	NH
EPA 8082 A (2/07)	2,2',3,4,4',5'-HEXACHLOROBIPHENYL (BZ-138)	NH
EPA 8082 A (2/07)	2,2',3,4,5'-PENTACHLOROBIPHENYL (BZ-87)	NH
EPA 8082 A (2/07)	2,2',4,4',5,5'-HEXACHLOROBIPHENYL (BZ-153)	NH
EPA 8082 A (2/07)	2,2',5,5'-TETRACHLOROBIPHENYL (BZ-52)	NH
EPA 8082 A (2/07)	2,3',4,4'-TETRACHLOROBIPHENYL (BZ-66)	NH
EPA 8082 A (2/07)	AROCLOR-1221 (PCB-1221)	NH
EPA 8082 A (2/07)	AROCLOR-1242 (PCB-1242)	NH
EPA 8082 A (2/07)	AROCLOR-1254 (PCB-1254)	NH
EPA 8082 A - EXTENDED (2/07)	DECACHLOROBIPHENYL (BZ-209)	NH
EPA 8151 A (12/96)	2,4-D	NH
EPA 8151 A (12/96)	DALAPON	NH
EPA 8151 A (12/96)	DICHLOROPROP (DICHLORPROP)	NH
EPA 8151 A (12/96)	MCPA	NH
EPA 8151 A (12/96)	SILVEX (2,4,5-TP)	NH
EPA 8260 B 1996	1,1,1-TRICHLOROETHANE	NH
EPA 8260 B 1996	1,1,2-TRICHLOROETHANE	NH
EPA 8260 B 1996	1,1-DICHLOROETHYLENE	NH
EPA 8260 B 1996	1,2,3-TRICHLOROBENZENE	NH
EPA 8260 B 1996	1,2,4-TRICHLOROBENZENE	NH
EPA 8260 B 1996	1,2-DIBROMO-3-CHLOROPROPANE (DBCP)	NH
EPA 8260 B 1996	1,2-DICHLOROBENZENE	NH

Commonwealth of Virginia

Department of General Services
Division of Consolidated Laboratory Services

Scope of Accreditation

VELAP Certificate No.: 2457

KATAHDIN ANALYTICAL SERVICES, INC.
600 TECHNOLOGY WAY
SCARBOROUGH, ME 04074

Virginia Laboratory ID: 460179
Effective Date: September 15, 2013
Expiration Date: September 14, 2014

NON-POTABLE WATER

METHOD	ANALYTE	PRIMARY
EPA 8260 B 1996	1,2-DICHLOROETHANE (ETHYLENE DICHLORIDE)	NH
EPA 8260 B 1996	1,3,5-TRIMETHYLBENZENE	NH
EPA 8260 B 1996	1,3-DICHLOROPROPANE	NH
EPA 8260 B 1996	1,4-DIOXANE (1,4-DIETHYLENEOXIDE)	NH
EPA 8260 B 1996	2-BUTANONE (METHYL ETHYL KETONE, MEK)	NH
EPA 8260 B 1996	2-CHLOROTOLUENE	NH
EPA 8260 B 1996	4-CHLOROTOLUENE	NH
EPA 8260 B 1996	4-METHYL-2-PENTANONE (MIBK)	NH
EPA 8260 B 1996	ACETONITRILE	NH
EPA 8260 B 1996	ACRYLONITRILE	NH
EPA 8260 B 1996	BENZENE	NH
EPA 8260 B 1996	BROMOCHLOROMETHANE	NH
EPA 8260 B 1996	BROMOFORM	NH
EPA 8260 B 1996	CARBON TETRACHLORIDE	NH
EPA 8260 B 1996	CHLORODIBROMOMETHANE	NH
EPA 8260 B 1996	CHLOROFORM	NH
EPA 8260 B 1996	CIS-1,3-DICHLOROPROPENE	NH
EPA 8260 B 1996	DICHLORODIFLUOROMETHANE (FREON-12)	NH
EPA 8260 B 1996	ETHYL METHACRYLATE	NH
EPA 8260 B 1996	ETHYLBENZENE	NH
EPA 8260 B 1996	IODOMETHANE (METHYL IODIDE)	NH
EPA 8260 B 1996	METHACRYLONITRILE	NH
EPA 8260 B 1996	METHYL CHLORIDE (CHLOROMETHANE)	NH
EPA 8260 B 1996	METHYL TERT-BUTYL ETHER (MTBE)	NH
EPA 8260 B 1996	N-BUTYLBENZENE	NH
EPA 8260 B 1996	NAPHTHALENE	NH
EPA 8260 B 1996	PROPIONITRILE (ETHYL CYANIDE)	NH
EPA 8260 B 1996	STYRENE	NH
EPA 8260 B 1996	TERT-BUTYLBENZENE	NH
EPA 8260 B 1996	TOLUENE	NH

METHOD	ANALYTE	PRIMARY
EPA 8260 B 1996	1,2-DICHLOROPROPANE	NH
EPA 8260 B 1996	1,3-DICHLOROBENZENE	NH
EPA 8260 B 1996	1,4-DICHLOROBENZENE	NH
EPA 8260 B 1996	2,2-DICHLOROPROPANE	NH
EPA 8260 B 1996	2-CHLOROETHYL VINYL ETHER	NH
EPA 8260 B 1996	2-HEXANONE	NH
EPA 8260 B 1996	4-ISOPROPYLTOLUENE (P-CYMENE)	NH
EPA 8260 B 1996	ACETONE	NH
EPA 8260 B 1996	ACROLEIN (PROPENAL)	NH
EPA 8260 B 1996	ALLYL CHLORIDE (3-CHLOROPROPENE)	NH
EPA 8260 B 1996	BROMOBENZENE	NH
EPA 8260 B 1996	BROMODICHLOROMETHANE	NH
EPA 8260 B 1996	CARBON DISULFIDE	NH
EPA 8260 B 1996	CHLOROBENZENE	NH
EPA 8260 B 1996	CHLOROETHANE (ETHYL CHLORIDE)	NH
EPA 8260 B 1996	CIS-1,2-DICHLOROETHYLENE	NH
EPA 8260 B 1996	DIBROMOMETHANE (METHYLENE BROMIDE)	NH
EPA 8260 B 1996	DIETHYL ETHER	NH
EPA 8260 B 1996	ETHYL-T-BUTYLETHER (2-ETHOXY-2-METHYLPROPANE, ETBE)	NH
EPA 8260 B 1996	HEXACHLOROBUTADIENE (1,3-HEXACHLOROBUTADIENE)	NH
EPA 8260 B 1996	ISOBUTYL ALCOHOL (2-METHYL-1-PROPANOL)	NH
EPA 8260 B 1996	METHYL BROMIDE (BROMOMETHANE)	NH
EPA 8260 B 1996	METHYL METHACRYLATE	NH
EPA 8260 B 1996	METHYLENE CHLORIDE (DICHLOROMETHANE)	NH
EPA 8260 B 1996	N-PROPYLBENZENE	NH
EPA 8260 B 1996	PENTACHLOROETHANE	NH
EPA 8260 B 1996	SEC-BUTYLBENZENE	NH
EPA 8260 B 1996	TERT-BUTYL ALCOHOL	NH
EPA 8260 B 1996	TETRACHLOROETHENE (PERCHLOROETHENE)	NH

Commonwealth of Virginia

Department of General Services
Division of Consolidated Laboratory Services

Scope of Accreditation

VELAP Certificate No.: 2457

KATAHDIN ANALYTICAL SERVICES, INC.
600 TECHNOLOGY WAY
SCARBOROUGH, ME 04074

Virginia Laboratory ID: 460179
Effective Date: September 15, 2013
Expiration Date: September 14, 2014

NON-POTABLE WATER

METHOD	ANALYTE	PRIMARY
EPA 8260 B 1996	TRANS-1,2-DICHLOROETHENE	NH
EPA 8260 B 1996	TRANS-1,4-DICHLORO-2-BUTENE	NH
EPA 8260 B 1996	TRICHLOROFLUOROMETHANE (FLUOROTRICHLOROMETHANE, FREON 11)	NH
EPA 8260 B 1996	VINYL CHLORIDE	NH
EPA 8260 B - EXTENDED 1996	1,1,2-TRICHLORO-1,2,2-TRIFLUOR OETHANE (FREON 113)	NH
EPA 8260 B - EXTENDED 1996	T-AMYLMETHYLETHER (TAME)	NH
EPA 8260 C 2006	1,1,1-TRICHLOROETHANE	NH
EPA 8260 C 2006	1,1,2-TRICHLOROETHANE	NH
EPA 8260 C 2006	1,1-DICHLOROETHYLENE	NH
EPA 8260 C 2006	1,2,3-TRICHLOROBENZENE	NH
EPA 8260 C 2006	1,2,4-TRIMETHYLBENZENE	NH
EPA 8260 C 2006	1,2-DIBROMOETHANE (EDB, ETHYLENE DIBROMIDE)	NH
EPA 8260 C 2006	1,2-DICHLOROETHANE (ETHYLENE DICHLORIDE)	NH
EPA 8260 C 2006	1,3,5-TRIMETHYLBENZENE	NH
EPA 8260 C 2006	1,3-DICHLOROPROPANE	NH
EPA 8260 C 2006	1,4-DIOXANE (1,4-DIETHYLENEOXIDE)	NH
EPA 8260 C 2006	2-BUTANONE (METHYL ETHYL KETONE, MEK)	NH
EPA 8260 C 2006	2-CHLOROTOLUENE	NH
EPA 8260 C 2006	4-CHLOROTOLUENE	NH
EPA 8260 C 2006	4-METHYL-2-PENTANONE (MIBK)	NH
EPA 8260 C 2006	ACETONITRILE	NH
EPA 8260 C 2006	ACRYLONITRILE	NH
EPA 8260 C 2006	BENZENE	NH
EPA 8260 C 2006	BROMOCHLOROMETHANE	NH
EPA 8260 C 2006	BROMOFORM	NH
EPA 8260 C 2006	CARBON TETRACHLORIDE	NH
EPA 8260 C 2006	CHLORODIBROMOMETHANE	NH
EPA 8260 C 2006	CHLOROFORM	NH
EPA 8260 C 2006	CIS-1,3-DICHLOROPROPENE	NH
EPA 8260 C 2006	DICHLORODIFLUOROMETHANE (FREON-12)	NH
EPA 8260 C 2006	ETHYL METHACRYLATE	NH

METHOD	ANALYTE	PRIMARY
EPA 8260 B 1996	TRANS-1,3-DICHLOROPROPENE	NH
EPA 8260 B 1996	TRICHLOROETHENE (TRICHLOROETHYLENE)	NH
EPA 8260 B 1996	VINYL ACETATE	NH
EPA 8260 B 1996	XYLENE (TOTAL)	NH
EPA 8260 B - EXTENDED 1996	DI-ISOPROPYLETHER (DIPE, ISOPROPYL ETHER)	NH
EPA 8260 C 2006	1,1,1,2-TETRACHLOROETHANE	NH
EPA 8260 C 2006	1,1,2,2-TETRACHLOROETHANE	NH
EPA 8260 C 2006	1,1-DICHLOROETHANE	NH
EPA 8260 C 2006	1,1-DICHLOROPROPENE	NH
EPA 8260 C 2006	1,2,3-TRICHLOROPROPANE	NH
EPA 8260 C 2006	1,2-DIBROMO-3-CHLOROPROPAN E (DBCP)	NH
EPA 8260 C 2006	1,2-DICHLOROBENZENE	NH
EPA 8260 C 2006	1,2-DICHLOROPROPANE	NH
EPA 8260 C 2006	1,3-DICHLOROBENZENE	NH
EPA 8260 C 2006	1,4-DICHLOROBENZENE	NH
EPA 8260 C 2006	2,2-DICHLOROPROPANE	NH
EPA 8260 C 2006	2-CHLOROETHYL VINYL ETHER	NH
EPA 8260 C 2006	2-HEXANONE	NH
EPA 8260 C 2006	4-ISOPROPYLTOLUENE (P-CYMENE)	NH
EPA 8260 C 2006	ACETONE	NH
EPA 8260 C 2006	ACROLEIN (PROPENAL)	NH
EPA 8260 C 2006	ALLYL CHLORIDE (3-CHLOROPROPENE)	NH
EPA 8260 C 2006	BROMOBENZENE	NH
EPA 8260 C 2006	BROMODICHLOROMETHANE	NH
EPA 8260 C 2006	CARBON DISULFIDE	NH
EPA 8260 C 2006	CHLOROBENZENE	NH
EPA 8260 C 2006	CHLOROETHANE (ETHYL CHLORIDE)	NH
EPA 8260 C 2006	CIS-1,2-DICHLOROETHYLENE	NH
EPA 8260 C 2006	DIBROMOMETHANE (METHYLENE BROMIDE)	NH
EPA 8260 C 2006	DIETHYL ETHER	NH

Commonwealth of Virginia

Department of General Services
Division of Consolidated Laboratory Services

Scope of Accreditation

VELAP Certificate No.: 2457

KATAHDIN ANALYTICAL SERVICES, INC.
600 TECHNOLOGY WAY
SCARBOROUGH, ME 04074

Virginia Laboratory ID: 460179
Effective Date: September 15, 2013
Expiration Date: September 14, 2014

NON-POTABLE WATER

METHOD	ANALYTE	PRIMARY
EPA 8260 C 2006	ETHYL-T-BUTYLETHER (2-ETHOXY-2-METHYLPROPANE, ETBE)	NH
EPA 8260 C 2006	HEXACHLOROBUTADIENE (1,3-HEXACHLOROBUTADIENE)	NH
EPA 8260 C 2006	ISOBUTYL ALCOHOL (2-METHYL-1-PROPANOL)	NH
EPA 8260 C 2006	METHACRYLONITRILE	NH
EPA 8260 C 2006	METHYL CHLORIDE (CHLOROMETHANE)	NH
EPA 8260 C 2006	METHYL TERT-BUTYL ETHER (MTBE)	NH
EPA 8260 C 2006	METHYLENE CHLORIDE (DICHLOROMETHANE)	NH
EPA 8260 C 2006	N-PROPYLBENZENE	NH
EPA 8260 C 2006	PENTACHLOROETHANE	NH
EPA 8260 C 2006	SEC-BUTYLBENZENE	NH
EPA 8260 C 2006	T-AMYLMETHYLETHER (TAME)	NH
EPA 8260 C 2006	TERT-BUTYLBENZENE	NH
EPA 8260 C 2006	TOLUENE	NH
EPA 8260 C 2006	TRANS-1,3-DICHLOROPROPENE	NH
EPA 8260 C 2006	TRICHLOROETHENE (TRICHLOROETHYLENE)	NH
EPA 8260 C 2006	VINYL ACETATE	NH
EPA 8260 C 2006	XYLENE (TOTAL)	NH
EPA 8260 C - EXTENDED 2006	DI-ISOPROPYLETHER (DIPE, ISOPROPYL ETHER)	NH
EPA 8270 C 1996	1,2,4-TRICHLOROBENZENE	NH
EPA 8270 C 1996	1,2-DIPHENYLHYDRAZINE	NH
EPA 8270 C 1996	1,3-DICHLOROBENZENE	NH
EPA 8270 C 1996	1,4-DICHLOROBENZENE	NH
EPA 8270 C 1996	1,4-PHENYLENEDIAMINE	NH
EPA 8270 C 1996	2,4,6-TRICHLOROPHENOL	NH
EPA 8270 C 1996	2,4-DIMETHYLPHENOL	NH
EPA 8270 C 1996	2,4-DINITROTOLUENE (2,4-DNT)	NH
EPA 8270 C 1996	2,6-DINITROTOLUENE (2,6-DNT)	NH
EPA 8270 C 1996	2-CHLOROPHENOL	NH
EPA 8270 C 1996	2-METHYLNAPHTHALENE	NH
EPA 8270 C 1996	2-NAPHTHYLAMINE	NH

METHOD	ANALYTE	PRIMARY
EPA 8260 C 2006	ETHYLBENZENE	NH
EPA 8260 C 2006	IODOMETHANE (METHYL IODIDE)	NH
EPA 8260 C 2006	ISOPROPYLBENZENE	NH
EPA 8260 C 2006	METHYL BROMIDE (BROMOMETHANE)	NH
EPA 8260 C 2006	METHYL METHACRYLATE	NH
EPA 8260 C 2006	METHYLCYCLOHEXANE	NH
EPA 8260 C 2006	N-BUTYLBENZENE	NH
EPA 8260 C 2006	NAPHTHALENE	NH
EPA 8260 C 2006	PROPIONITRILE (ETHYL CYANIDE)	NH
EPA 8260 C 2006	STYRENE	NH
EPA 8260 C 2006	TERT-BUTYL ALCOHOL	NH
EPA 8260 C 2006	TETRACHLOROETHENE (PERCHLOROETHENE)	NH
EPA 8260 C 2006	TRANS-1,2-DICHLOROETHENE	NH
EPA 8260 C 2006	TRANS-1,4-DICHLORO-2-BUTENE	NH
EPA 8260 C 2006	TRICHLOROFLUOROMETHANE (FLUOROTRICHLOROMETHANE, FREON 11)	NH
EPA 8260 C 2006	VINYL CHLORIDE	NH
EPA 8260 C - EXTENDED 2006	1,1,2-TRICHLORO-1,2,2-TRIFLUOR OETHANE (FREON 113)	NH
EPA 8270 C 1996	1,2,4,5-TETRACHLOROBENZENE	NH
EPA 8270 C 1996	1,2-DICHLOROBENZENE	NH
EPA 8270 C 1996	1,3,5-TRINITROBENZENE (1,3,5-TNB)	NH
EPA 8270 C 1996	1,3-DINITROBENZENE (1,3-DNB)	NH
EPA 8270 C 1996	1,4-NAPHTHOQUINONE	NH
EPA 8270 C 1996	2,4,5-TRICHLOROPHENOL	NH
EPA 8270 C 1996	2,4-DICHLOROPHENOL	NH
EPA 8270 C 1996	2,4-DINITROPHENOL	NH
EPA 8270 C 1996	2,6-DICHLOROPHENOL	NH
EPA 8270 C 1996	2-CHLORONAPHTHALENE	NH
EPA 8270 C 1996	2-METHYL-4,6-DINITROPHENOL (4,6-DINITRO-2-METHYLPHENOL)	NH
EPA 8270 C 1996	2-METHYLPHENOL (O-CRESOL)	NH
EPA 8270 C 1996	2-NITROANILINE	NH

KATAHDIN ANALYTICAL SERVICES, INC.
600 TECHNOLOGY WAY
SCARBOROUGH, ME 04074

Virginia Laboratory ID: 460179
Effective Date: September 15, 2013
Expiration Date: September 14, 2014

NON-POTABLE WATER

METHOD	ANALYTE	PRIMARY
EPA 8270 C 1996	2-NITROPHENOL	NH
EPA 8270 C 1996	3,3'-DICHLOROBENZIDINE	NH
EPA 8270 C 1996	3-METHYLCHOLANTHRENE	NH
EPA 8270 C 1996	4-AMINOBIPHENYL	NH
EPA 8270 C 1996	4-CHLORO-3-METHYLPHENOL	NH
EPA 8270 C 1996	4-CHLOROPHENYL PHENYLETHER	NH
EPA 8270 C 1996	4-METHYLPHENOL (P-CRESOL)	NH
EPA 8270 C 1996	4-NITROPHENOL	NH
EPA 8270 C 1996	7,12-DIMETHYLBENZ(A) ANTHRACENE	NH
EPA 8270 C 1996	ACENAPHTHYLENE	NH
EPA 8270 C 1996	ANILINE	NH
EPA 8270 C 1996	ARAMITE	NH
EPA 8270 C 1996	BENZO(A)ANTHRACENE	NH
EPA 8270 C 1996	BENZO(G,H,I)PERYLENE	NH
EPA 8270 C 1996	BENZO[B]FLUORANTHENE	NH
EPA 8270 C 1996	BIS(2-CHLOROETHOXY)METHANE	NH
EPA 8270 C 1996	BIS(2-CHLOROISOPROPYL) ETHER	NH
EPA 8270 C 1996	BUTYL BENZYL PHTHALATE	NH
EPA 8270 C 1996	CHRYSENE	NH
EPA 8270 C 1996	DI-N-OCTYL PHTHALATE	NH
EPA 8270 C 1996	DIBENZO(A,H) ANTHRACENE	NH
EPA 8270 C 1996	DIETHYL PHTHALATE	NH
EPA 8270 C 1996	DIMETHYL PHTHALATE	NH
EPA 8270 C 1996	ETHYL METHANESULFONATE	NH
EPA 8270 C 1996	FLUORANTHENE	NH
EPA 8270 C 1996	HEXACHLOROBENZENE	NH
EPA 8270 C 1996	HEXACHLOROCYCLOPENTADIENE	NH
EPA 8270 C 1996	HEXACHLOROPROPENE	NH
EPA 8270 C 1996	ISODRIN	NH
EPA 8270 C 1996	ISOSAFROLE	NH
EPA 8270 C 1996	METHYL METHANESULFONATE	NH
EPA 8270 C 1996	N-NITROSO-DI-N-BUTYLAMINE	NH
EPA 8270 C 1996	N-NITROSODIETHYLAMINE	NH

METHOD	ANALYTE	PRIMARY
EPA 8270 C 1996	2-PICOLINE (2-METHYLPYRIDINE)	NH
EPA 8270 C 1996	3,3'-DIMETHYLBENZIDINE	NH
EPA 8270 C 1996	3-NITROANILINE	NH
EPA 8270 C 1996	4-BROMOPHENYL PHENYL ETHER	NH
EPA 8270 C 1996	4-CHLOROANILINE	NH
EPA 8270 C 1996	4-DIMETHYL AMINOAZOBENZENE	NH
EPA 8270 C 1996	4-NITROANILINE	NH
EPA 8270 C 1996	5-NITRO-O-TOLUIDINE	NH
EPA 8270 C 1996	ACENAPHTHENE	NH
EPA 8270 C 1996	ACETOPHENONE	NH
EPA 8270 C 1996	ANTHRACENE	NH
EPA 8270 C 1996	BENZIDINE	NH
EPA 8270 C 1996	BENZO(A)PYRENE	NH
EPA 8270 C 1996	BENZO(K)FLUORANTHENE	NH
EPA 8270 C 1996	BENZYL ALCOHOL	NH
EPA 8270 C 1996	BIS(2-CHLOROETHYL) ETHER	NH
EPA 8270 C 1996	BIS(2-ETHYLHEXYL) PHTHALATE (DI(2-ETHYLHEXYL)PHTHALATE), (DEHP)	NH
EPA 8270 C 1996	CHLOROBENZILATE	NH
EPA 8270 C 1996	DI-N-BUTYL PHTHALATE	NH
EPA 8270 C 1996	DIALLATE	NH
EPA 8270 C 1996	DIBENZOFURAN	NH
EPA 8270 C 1996	DIMETHOATE	NH
EPA 8270 C 1996	DINOSEB (2-SEC-BUTYL-4,6-DINITROPHENOL, DNBP)	NH
EPA 8270 C 1996	FAMPHUR	NH
EPA 8270 C 1996	FLUORENE	NH
EPA 8270 C 1996	HEXACHLOROBUTADIENE (1,3-HEXACHLOROBUTADIENE)	NH
EPA 8270 C 1996	HEXACHLOROETHANE	NH
EPA 8270 C 1996	INDENO(1,2,3-CD) PYRENE	NH
EPA 8270 C 1996	ISOPHORONE	NH
EPA 8270 C 1996	KEPONE	NH
EPA 8270 C 1996	METHYL PARATHION (PARATHION, METHYL)	NH
EPA 8270 C 1996	N-NITROSODI-N-PROPYLAMINE	NH
EPA 8270 C 1996	N-NITROSODIMETHYLAMINE	NH

KATAHDIN ANALYTICAL SERVICES, INC.
600 TECHNOLOGY WAY
SCARBOROUGH, ME 04074

Virginia Laboratory ID: 460179
Effective Date: September 15, 2013
Expiration Date: September 14, 2014

NON-POTABLE WATER

METHOD	ANALYTE	PRIMARY
EPA 8270 C 1996	N-NITROSODIPHENYLAMINE	NH
EPA 8270 C 1996	N-NITROSOMORPHOLINE	NH
EPA 8270 C 1996	N-NITROSOPYRROLIDINE	NH
EPA 8270 C 1996	NITROBENZENE	NH
EPA 8270 C 1996	O,O,O-TRIETHYL PHOSPHOROTHIOATE	NH
EPA 8270 C 1996	PENTACHLOROBENZENE	NH
EPA 8270 C 1996	PHENACETIN	NH
EPA 8270 C 1996	PHENOL	NH
EPA 8270 C 1996	PRONAMIDE (KERB)	NH
EPA 8270 C 1996	SAFROLE	NH
EPA 8270 C 1996	THIONAZIN (ZINOPHOS)	NH
EPA 8270 C SIM 1996	ACENAPHTHYLENE	NH
EPA 8270 C SIM 1996	BENZO(A)ANTHRACENE	NH
EPA 8270 C SIM 1996	BENZO(G,H,I)PERYLENE	NH
EPA 8270 C SIM 1996	BENZO[B]FLUORANTHENE	NH
EPA 8270 C SIM 1996	DIBENZO(A,H) ANTHRACENE	NH
EPA 8270 C SIM 1996	FLUORENE	NH
EPA 8270 C SIM 1996	NAPHTHALENE	NH
EPA 8270 C SIM 1996	PYRENE	NH
EPA 8270 D (2/07)	1,2,4-TRICHLOROBENZENE	NH
EPA 8270 D (2/07)	1,2-DIPHENYLHYDRAZINE	NH
EPA 8270 D (2/07)	1,3-DICHLOROBENZENE	NH
EPA 8270 D (2/07)	1,4-DICHLOROBENZENE	NH
EPA 8270 D (2/07)	1,4-PHENYLENEDIAMINE	NH
EPA 8270 D (2/07)	2,4,5-TRICHLOROPHENOL	NH
EPA 8270 D (2/07)	2,4-DICHLOROPHENOL	NH
EPA 8270 D (2/07)	2,4-DINITROPHENOL	NH
EPA 8270 D (2/07)	2,6-DICHLOROPHENOL	NH
EPA 8270 D (2/07)	2-ACETYLAMINOFLUORENE	NH
EPA 8270 D (2/07)	2-CHLOROPHENOL	NH
EPA 8270 D (2/07)	2-METHYLNAPHTHALENE	NH
EPA 8270 D (2/07)	2-NAPHTHYLAMINE	NH
EPA 8270 D (2/07)	2-NITROPHENOL	NH
EPA 8270 D (2/07)	3,3'-DICHLOROBENZIDINE	NH
EPA 8270 D (2/07)	3-METHYLCHOLANTHRENE	NH
EPA 8270 D (2/07)	4-AMINOBIPHENYL	NH

METHOD	ANALYTE	PRIMARY
EPA 8270 C 1996	N-NITROSOMETHYLETHYLAMINE	NH
EPA 8270 C 1996	N-NITROSOPIPERIDINE	NH
EPA 8270 C 1996	NAPHTHALENE	NH
EPA 8270 C 1996	NITROQUINOLINE-1-OXIDE	NH
EPA 8270 C 1996	O-TOLUIDINE (2-METHYLANILINE)	NH
EPA 8270 C 1996	PENTACHLOROPHENOL	NH
EPA 8270 C 1996	PHENANTHRENE	NH
EPA 8270 C 1996	PHORATE	NH
EPA 8270 C 1996	PYRENE	NH
EPA 8270 C 1996	SULFOTEPP (TETRAETHYL DITHIOPYROPHOSPHATE)	NH
EPA 8270 C SIM 1996	ACENAPHTHENE	NH
EPA 8270 C SIM 1996	ANTHRACENE	NH
EPA 8270 C SIM 1996	BENZO(A)PYRENE	NH
EPA 8270 C SIM 1996	BENZO(K)FLUORANTHENE	NH
EPA 8270 C SIM 1996	CHRYSENE	NH
EPA 8270 C SIM 1996	FLUORANTHENE	NH
EPA 8270 C SIM 1996	INDENO(1,2,3-CD) PYRENE	NH
EPA 8270 C SIM 1996	PHENANTHRENE	NH
EPA 8270 D (2/07)	1,2,4,5-TETRACHLOROBENZENE	NH
EPA 8270 D (2/07)	1,2-DICHLOROBENZENE	NH
EPA 8270 D (2/07)	1,3,5-TRINITROBENZENE (1,3,5-TNB)	NH
EPA 8270 D (2/07)	1,3-DINITROBENZENE (1,3-DNB)	NH
EPA 8270 D (2/07)	1,4-NAPHTHOQUINONE	NH
EPA 8270 D (2/07)	2,3,4,6-TETRACHLOROPHENOL	NH
EPA 8270 D (2/07)	2,4,6-TRICHLOROPHENOL	NH
EPA 8270 D (2/07)	2,4-DIMETHYLPHENOL	NH
EPA 8270 D (2/07)	2,4-DINITROTOLUENE (2,4-DNT)	NH
EPA 8270 D (2/07)	2,6-DINITROTOLUENE (2,6-DNT)	NH
EPA 8270 D (2/07)	2-CHLORONAPHTHALENE	NH
EPA 8270 D (2/07)	2-METHYL-4,6-DINITROPHENOL (4,6-DINITRO-2-METHYLPHENOL)	NH
EPA 8270 D (2/07)	2-METHYLPHENOL (O-CRESOL)	NH
EPA 8270 D (2/07)	2-NITROANILINE	NH
EPA 8270 D (2/07)	2-PICOLINE (2-METHYLPYRIDINE)	NH
EPA 8270 D (2/07)	3,3'-DIMETHYLBENZIDINE	NH
EPA 8270 D (2/07)	3-NITROANILINE	NH
EPA 8270 D (2/07)	4-BROMOPHENYL PHENYL ETHER	NH

Commonwealth of Virginia

Department of General Services
Division of Consolidated Laboratory Services

Scope of Accreditation

VELAP Certificate No.: 2457

KATAHDIN ANALYTICAL SERVICES, INC.
600 TECHNOLOGY WAY
SCARBOROUGH, ME 04074

Virginia Laboratory ID: 460179
Effective Date: September 15, 2013
Expiration Date: September 14, 2014

NON-POTABLE WATER

METHOD	ANALYTE	PRIMARY
EPA 8270 D (2/07)	4-CHLORO-3-METHYLPHENOL	NH
EPA 8270 D (2/07)	4-CHLOROPHENYL PHENYLETHER	NH
EPA 8270 D (2/07)	4-METHYLPHENOL (P-CRESOL)	NH
EPA 8270 D (2/07)	4-NITROPHENOL	NH
EPA 8270 D (2/07)	7,12-DIMETHYLBENZ(A) ANTHRACENE	NH
EPA 8270 D (2/07)	ACENAPHTHYLENE	NH
EPA 8270 D (2/07)	ANILINE	NH
EPA 8270 D (2/07)	ARAMITE	NH
EPA 8270 D (2/07)	BENZO(A)ANTHRACENE	NH
EPA 8270 D (2/07)	BENZO(G,H,I)PERYLENE	NH
EPA 8270 D (2/07)	BENZOIC ACID	NH
EPA 8270 D (2/07)	BENZYL ALCOHOL	NH
EPA 8270 D (2/07)	BIS(2-CHLOROETHYL) ETHER	NH
EPA 8270 D (2/07)	BIS(2-ETHYLHEXYL) PHTHALATE (DI(2-ETHYLHEXYL)PHTHALATE), (DEHP)	NH
EPA 8270 D (2/07)	CHLOROBENZILATE	NH
EPA 8270 D (2/07)	DI-N-BUTYL PHTHALATE	NH
EPA 8270 D (2/07)	DIALLATE	NH
EPA 8270 D (2/07)	DIBENZOFURAN	NH
EPA 8270 D (2/07)	DIMETHOATE	NH
EPA 8270 D (2/07)	DINOSEB (2-SEC-BUTYL-4,6-DINITROPHENOL, DNBP)	NH
EPA 8270 D (2/07)	FAMPHUR	NH
EPA 8270 D (2/07)	FLUORENE	NH
EPA 8270 D (2/07)	HEXACHLOROBUTADIENE (1,3-HEXACHLOROBUTADIENE)	NH
EPA 8270 D (2/07)	HEXACHLOROETHANE	NH
EPA 8270 D (2/07)	INDENO(1,2,3-CD) PYRENE	NH
EPA 8270 D (2/07)	ISOPHORONE	NH
EPA 8270 D (2/07)	KEPONE	NH
EPA 8270 D (2/07)	METHYL PARATHION (PARATHION, METHYL)	NH
EPA 8270 D (2/07)	N-NITROSODI-N-PROPYLAMINE	NH
EPA 8270 D (2/07)	N-NITROSODIMETHYLAMINE	NH
EPA 8270 D (2/07)	N-NITROSOMETHYLETHYLAMINE	NH
EPA 8270 D (2/07)	N-NITROSOPIPERIDINE	NH
EPA 8270 D (2/07)	NAPHTHALENE	NH
EPA 8270 D (2/07)	NITROQUINOLINE-1-OXIDE	NH

METHOD	ANALYTE	PRIMARY
EPA 8270 D (2/07)	4-CHLOROANILINE	NH
EPA 8270 D (2/07)	4-DIMETHYL AMINOAZOBENZENE	NH
EPA 8270 D (2/07)	4-NITROANILINE	NH
EPA 8270 D (2/07)	5-NITRO-O-TOLUIDINE	NH
EPA 8270 D (2/07)	ACENAPHTHENE	NH
EPA 8270 D (2/07)	ACETOPHENONE	NH
EPA 8270 D (2/07)	ANTHRACENE	NH
EPA 8270 D (2/07)	BENZIDINE	NH
EPA 8270 D (2/07)	BENZO(A)PYRENE	NH
EPA 8270 D (2/07)	BENZO(K)FLUORANTHENE	NH
EPA 8270 D (2/07)	BENZO[B]FLUORANTHENE	NH
EPA 8270 D (2/07)	BIS(2-CHLOROETHOXY)METHANE	NH
EPA 8270 D (2/07)	BIS(2-CHLOROISOPROPYL) ETHER	NH
EPA 8270 D (2/07)	BUTYL BENZYL PHTHALATE	NH
EPA 8270 D (2/07)	CHRYSENE	NH
EPA 8270 D (2/07)	DI-N-OCTYL PHTHALATE	NH
EPA 8270 D (2/07)	DIBENZO(A,H) ANTHRACENE	NH
EPA 8270 D (2/07)	DIETHYL PHTHALATE	NH
EPA 8270 D (2/07)	DIMETHYL PHTHALATE	NH
EPA 8270 D (2/07)	ETHYL METHANESULFONATE	NH
EPA 8270 D (2/07)	FLUORANTHENE	NH
EPA 8270 D (2/07)	HEXACHLOROBENZENE	NH
EPA 8270 D (2/07)	HEXACHLOROCYCLOPENTADIENE	NH
EPA 8270 D (2/07)	HEXACHLOROPROPENE	NH
EPA 8270 D (2/07)	ISODRIN	NH
EPA 8270 D (2/07)	ISOSAFROLE	NH
EPA 8270 D (2/07)	METHYL METHANESULFONATE	NH
EPA 8270 D (2/07)	N-NITROSO-DI-N-BUTYLAMINE	NH
EPA 8270 D (2/07)	N-NITROSODIETHYLAMINE	NH
EPA 8270 D (2/07)	N-NITROSODIPHENYLAMINE	NH
EPA 8270 D (2/07)	N-NITROSOMORPHOLINE	NH
EPA 8270 D (2/07)	N-NITROSOPYRROLIDINE	NH
EPA 8270 D (2/07)	NITROBENZENE	NH

Commonwealth of Virginia

Department of General Services
Division of Consolidated Laboratory Services

Scope of Accreditation

VELAP Certificate No.: 2457

KATAHDIN ANALYTICAL SERVICES, INC.
600 TECHNOLOGY WAY
SCARBOROUGH, ME 04074

Virginia Laboratory ID: 460179
Effective Date: September 15, 2013
Expiration Date: September 14, 2014

NON-POTABLE WATER

METHOD	ANALYTE	PRIMARY
EPA 8270 D (2/07)	O,O,O-TRIETHYL PHOSPHOROTHIOATE	NH
EPA 8270 D (2/07)	PENTACHLOROBENZENE	NH
EPA 8270 D (2/07)	PENTACHLOROPHENOL	NH
EPA 8270 D (2/07)	PHENANTHRENE	NH
EPA 8270 D (2/07)	PHORATE	NH
EPA 8270 D (2/07)	PYRENE	NH
EPA 8270 D (2/07)	SULFOTEPP (TETRAETHYL DITHIOPYROPHOSPHATE)	NH
EPA 8270 D - EXTENDED (2/07)	1,1-BIPHENYL	NH
EPA 8270 D - EXTENDED (2/07)	CARBAZOLE	NH
EPA 8330 (9/94)	1,3-DINITROBENZENE (1,3-DNB)	NH
EPA 8330 (9/94)	2,4-DINITROTOLUENE (2,4-DNT)	NH
EPA 8330 (9/94)	2-AMINO-4,6-DINITROTOLUENE (2-AM-DNT)	NH
EPA 8330 (9/94)	3-NITROTOLUENE	NH
EPA 8330 (9/94)	4-NITROTOLUENE	NH
EPA 8330 (9/94)	NITROBENZENE	NH
EPA 8330 (9/94)	OCTAHYDRO-1,3,5,7-TETRANITRO -1,3,5,7-TETRAZOCINE (HMX)	NH
EPA 8330 B (10/06)	1,3,5-TRINITROBENZENE (1,3,5-TNB)	NH
EPA 8330 B (10/06)	2,4,6-TRINITROTOLUENE (2,4,6-TNT)	NH
EPA 8330 B (10/06)	2,6-DINITROTOLUENE (2,6-DNT)	NH
EPA 8330 B (10/06)	2-NITROTOLUENE	NH
EPA 8330 B (10/06)	4-AMINO-2,6-DINITROTOLUENE (4-AM-DNT)	NH
EPA 8330 B (10/06)	METHYL-2,4,6-TRINITROPHENYLN ITRAMINE (TETRYL)	NH
EPA 8330 B (10/06)	NITROGLYCERIN	NH
EPA 8330 B (10/06)	RDX (HEXAHYDRO-1,3,5-TRINITRO-1,3, 5-TRIAZINE)	NH
EPA 9040 C (11/04)	PH	NH
EPA 9056 (9/94)	CHLORIDE	NH
EPA 9056 (9/94)	NITRITE	NH
EPA 9056 (9/94)	SULFATE	NH
EPA 9065 1986	TOTAL PHENOLICS	NH

METHOD	ANALYTE	PRIMARY
EPA 8270 D (2/07)	O-TOLUIDINE (2-METHYLANILINE)	NH
EPA 8270 D (2/07)	PENTACHLORONITROBENZENE	NH
EPA 8270 D (2/07)	PHENACETIN	NH
EPA 8270 D (2/07)	PHENOL	NH
EPA 8270 D (2/07)	PRONAMIDE (KERB)	NH
EPA 8270 D (2/07)	SAFROLE	NH
EPA 8270 D (2/07)	THIONAZIN (ZINOPHOS)	NH
EPA 8270 D - EXTENDED (2/07)	CAPROLACTAM	NH
EPA 8330 (9/94)	1,3,5-TRINITROBENZENE (1,3,5-TNB)	NH
EPA 8330 (9/94)	2,4,6-TRINITROTOLUENE (2,4,6-TNT)	NH
EPA 8330 (9/94)	2,6-DINITROTOLUENE (2,6-DNT)	NH
EPA 8330 (9/94)	2-NITROTOLUENE	NH
EPA 8330 (9/94)	4-AMINO-2,6-DINITROTOLUENE (4-AM-DNT)	NH
EPA 8330 (9/94)	METHYL-2,4,6-TRINITROPHENYLN ITRAMINE (TETRYL)	NH
EPA 8330 (9/94)	NITROGLYCERIN	NH
EPA 8330 (9/94)	RDX (HEXAHYDRO-1,3,5-TRINITRO-1,3, 5-TRIAZINE)	NH
EPA 8330 B (10/06)	1,3-DINITROBENZENE (1,3-DNB)	NH
EPA 8330 B (10/06)	2,4-DINITROTOLUENE (2,4-DNT)	NH
EPA 8330 B (10/06)	2-AMINO-4,6-DINITROTOLUENE (2-AM-DNT)	NH
EPA 8330 B (10/06)	3-NITROTOLUENE	NH
EPA 8330 B (10/06)	4-NITROTOLUENE	NH
EPA 8330 B (10/06)	NITROBENZENE	NH
EPA 8330 B (10/06)	OCTAHYDRO-1,3,5,7-TETRANITRO -1,3,5,7-TETRAZOCINE (HMX)	NH
EPA 9038 1986	SULFATE	NH
EPA 9056 (9/94)	BROMIDE	NH
EPA 9056 (9/94)	NITRATE AS N	NH
EPA 9056 (9/94)	ORTHOPHOSPHATE AS P	NH
EPA 9056 A 2/07	ORTHOPHOSPHATE AS P	NH
EPA 9251 (9/86)	CHLORIDE	NH

Commonwealth of Virginia

Department of General Services
Division of Consolidated Laboratory Services

Scope of Accreditation

VELAP Certificate No.: 2457

KATAHDIN ANALYTICAL SERVICES, INC.
600 TECHNOLOGY WAY
SCARBOROUGH, ME 04074

Virginia Laboratory ID: 460179
Effective Date: September 15, 2013
Expiration Date: September 14, 2014

NON-POTABLE WATER

METHOD	ANALYTE	PRIMARY	METHOD	ANALYTE	PRIMARY
SM 2120 B 1995 21st ED	COLOR	NH	SM 2310 B 1998 20th ED	ACIDITY, AS CACO3	NH
SM 2320 B 1998 21st ED	ALKALINITY AS CACO3	NH	SM 2340 B-1997 1997	TOTAL HARDNESS AS CACO3	NH
SM 2510 B 2005 21st ED	CONDUCTIVITY	NH	SM 2540 B 2005 21st ED	RESIDUE-TOTAL	NH
SM 2540 C 2005 21st ED	RESIDUE-FILTERABLE (TDS)	NH	SM 2540 D 2005 21st ED	RESIDUE-NONFILTERABLE (TSS)	NH
SM 2540 F 1998 20th ED	RESIDUE-SETTLEABLE	NH	SM 3500-CR D 1995 19th ED	CHROMIUM VI	NH
SM 4500-CL⁻ E 2005 21st ED	CHLORIDE	NH	SM 4500-F⁻ C 2005 21st ED	FLUORIDE	NH
SM 4500-NH3 H 1992 18th ED	AMMONIA AS N	NH	SM 4500-NO3⁻ F 2005 21st	NITRATE/NITRITE	NH
SM 4500-NO3⁻ F 2005 21st	NITRITE AS N	NH	SM 4500-P E 1998 20th ED	ORTHOPHOSPHATE AS P	NH
SM 4500-S2⁻ E 1992 18th ED	SULFIDE	NH	SM 4500-SO3⁻ B 2005 21st ED	SULFITE-SO3	NH
SM 5210 B 2005 21st ED	CARBONACEOUS BOD, CBOD	NH	SM 5210 B-2001 2001	CARBONACEOUS BOD, CBOD	NH
SM 5310 B 2005 21st ED	TOTAL ORGANIC CARBON	NH	SM 5540 C 2005 21st ED	SURFACTANTS - MBAS	NH

SOLID AND CHEMICAL MATERIALS

METHOD	ANALYTE	PRIMARY	METHOD	ANALYTE	PRIMARY
EPA 1010 A 2002	FLASHPOINT	NH	EPA 1311 1992	PREP: TOXICITY CHARACTERISTIC LEACHING PROCEDURE	NH
EPA 1312 1994	PREP: SYNTHETIC PRECIPITATION LEACHING PROCEDURE	NH	EPA 6010 C 2007	ALUMINUM	NH
EPA 6010 C 2007	ANTIMONY	NH	EPA 6010 C 2007	ARSENIC	NH
EPA 6010 C 2007	BARIUM	NH	EPA 6010 C 2007	BERYLLIUM	NH
EPA 6010 C 2007	BORON	NH	EPA 6010 C 2007	CADMIUM	NH
EPA 6010 C 2007	CALCIUM	NH	EPA 6010 C 2007	CHROMIUM	NH
EPA 6010 C 2007	COBALT	NH	EPA 6010 C 2007	COPPER	NH
EPA 6010 C 2007	IRON	NH	EPA 6010 C 2007	LEAD	NH
EPA 6010 C 2007	MAGNESIUM	NH	EPA 6010 C 2007	MANGANESE	NH
EPA 6010 C 2007	NICKEL	NH	EPA 6010 C 2007	POTASSIUM	NH
EPA 6010 C 2007	SELENIUM	NH	EPA 6010 C 2007	SILVER	NH
EPA 6010 C 2007	SODIUM	NH	EPA 6010 C 2007	STRONTIUM	NH
EPA 6010 C 2007	THALLIUM	NH	EPA 6010 C 2007	TIN	NH
EPA 6010 C 2007	TITANIUM	NH	EPA 6010 C 2007	VANADIUM	NH
EPA 6010 C 2007	ZINC	NH	EPA 6020 A (2/07)	ALUMINUM	NH
EPA 6020 A (2/07)	ANTIMONY	NH	EPA 6020 A (2/07)	ARSENIC	NH

KATAHDIN ANALYTICAL SERVICES, INC.
600 TECHNOLOGY WAY
SCARBOROUGH, ME 04074

Virginia Laboratory ID: 460179
Effective Date: September 15, 2013
Expiration Date: September 14, 2014

SOLID AND CHEMICAL MATERIALS

METHOD	ANALYTE	PRIMARY	METHOD	ANALYTE	PRIMARY
EPA 6020 A (2/07)	BARIUM	NH	EPA 6020 A (2/07)	BERYLLIUM	NH
EPA 6020 A (2/07)	CADMIUM	NH	EPA 6020 A (2/07)	CHROMIUM	NH
EPA 6020 A (2/07)	COPPER	NH	EPA 6020 A (2/07)	IRON	NH
EPA 6020 A (2/07)	LEAD	NH	EPA 6020 A (2/07)	MANGANESE	NH
EPA 6020 A (2/07)	NICKEL	NH	EPA 6020 A (2/07)	SELENIUM	NH
EPA 6020 A (2/07)	SILVER	NH	EPA 6020 A (2/07)	THALLIUM	NH
EPA 6020 A (2/07)	ZINC	NH	EPA 7471 A 1994	MERCURY	NH
EPA 8015 C 2000	DIESEL RANGE ORGANICS (DRO)	NH	EPA 8015 C 2000	GASOLINE RANGE ORGANICS (GRO)	NH
EPA 8081 B (2/07)	4,4'-DDD	NH	EPA 8081 B (2/07)	4,4'-DDE	NH
EPA 8081 B (2/07)	4,4'-DDT	NH	EPA 8081 B (2/07)	ALDRIN	NH
EPA 8081 B (2/07)	ALPHA-BHC (ALPHA-HEXACHLOROCYCLOHEXANE)	NH	EPA 8081 B (2/07)	ALPHA-CHLORDANE [CIS-CHLORDANE]	NH
EPA 8081 B (2/07)	BETA-BHC (BETA-HEXACHLOROCYCLOHEXANE)	NH	EPA 8081 B (2/07)	CHLORDANE (TECH.)	NH
EPA 8081 B (2/07)	DELTA-BHC	NH	EPA 8081 B (2/07)	DIELDRIN	NH
EPA 8081 B (2/07)	ENDOSULFAN I	NH	EPA 8081 B (2/07)	ENDOSULFAN II	NH
EPA 8081 B (2/07)	ENDOSULFAN SULFATE	NH	EPA 8081 B (2/07)	ENDRIN	NH
EPA 8081 B (2/07)	ENDRIN ALDEHYDE	NH	EPA 8081 B (2/07)	ENDRIN KETONE	NH
EPA 8081 B (2/07)	GAMMA-BHC (LINDANE, GAMMA-HEXACHLOROCYCLOHEXANE)	NH	EPA 8081 B (2/07)	GAMMA-CHLORDANE [BETA-CHLORDANE, TRANS-CHLORDANE]	NH
EPA 8081 B (2/07)	HEPTACHLOR	NH	EPA 8081 B (2/07)	HEPTACHLOR EPOXIDE	NH
EPA 8081 B (2/07)	METHOXYCHLOR	NH	EPA 8081 B (2/07)	TOXAPHENE (CHLORINATED CAMPHENE)	NH
EPA 8082 A (2/07)	2,2',3,3',4,4',5,5',6-NONACHLOROBIPHENYL (BZ-206)	NH	EPA 8082 A (2/07)	2,2',3,3',4,4',5-HEPTACHLOROBIPHENYL (BZ-170)	NH
EPA 8082 A (2/07)	2,2',3,4',5,5',6-HEPTACHLOROBIPHENYL (BZ-187)	NH	EPA 8082 A (2/07)	2,2',3,4,4',5',6-HEPTACHLOROBIPHENYL (BZ-183)	NH
EPA 8082 A (2/07)	2,2',3,4,4',5'-HEXACHLOROBIPHENYL (BZ-138)	NH	EPA 8082 A (2/07)	2,2',3,4,5'-PENTACHLOROBIPHENYL (BZ-87)	NH
EPA 8082 A (2/07)	2,2',3,4,5,5'-HEXACHLOROBIPHENYL (BZ-141)	NH	EPA 8082 A (2/07)	2,2',3,5'-TETRACHLOROBIPHENYL (BZ-44)	NH
EPA 8082 A (2/07)	2,2',4,4',5,5'-HEXACHLOROBIPHENYL (BZ-153)	NH	EPA 8082 A (2/07)	2,2',4,5,5'-PENTACHLOROBIPHENYL (BZ-101)	NH
EPA 8082 A (2/07)	2,2',5,5'-TETRACHLOROBIPHENYL (BZ-52)	NH	EPA 8082 A (2/07)	2,2',5-TRICHLOROBIPHENYL (BZ-18)	NH
EPA 8082 A (2/07)	2,3',4,4'-TETRACHLOROBIPHENYL (BZ-66)	NH	EPA 8082 A (2/07)	AROCLOR-1016 (PCB-1016)	NH
EPA 8082 A (2/07)	AROCLOR-1221 (PCB-1221)	NH	EPA 8082 A (2/07)	AROCLOR-1232 (PCB-1232)	NH
EPA 8082 A (2/07)	AROCLOR-1242 (PCB-1242)	NH	EPA 8082 A (2/07)	AROCLOR-1248 (PCB-1248)	NH
EPA 8082 A (2/07)	AROCLOR-1254 (PCB-1254)	NH	EPA 8082 A (2/07)	AROCLOR-1260 (PCB-1260)	NH
EPA 8151 A (12/96)	2,4,5-T	NH	EPA 8151 A (12/96)	2,4-D	NH

Commonwealth of Virginia

Department of General Services
Division of Consolidated Laboratory Services

Scope of Accreditation

VELAP Certificate No.: 2457

KATAHDIN ANALYTICAL SERVICES, INC.
600 TECHNOLOGY WAY
SCARBOROUGH, ME 04074

Virginia Laboratory ID: 460179
Effective Date: September 15, 2013
Expiration Date: September 14, 2014

SOLID AND CHEMICAL MATERIALS

METHOD	ANALYTE	PRIMARY
EPA 8151 A (12/96)	2,4-DB	NH
EPA 8151 A (12/96)	DICAMBA	NH
EPA 8151 A (12/96)	DINOSEB (2-SEC-BUTYL-4,6-DINITROPHENOL, DNBP)	NH
EPA 8151 A (12/96)	MCPP	NH
EPA 8260 B 1996	1,1,1,2-TETRACHLOROETHANE	NH
EPA 8260 B 1996	1,1,2,2-TETRACHLOROETHANE	NH
EPA 8260 B 1996	1,1-DICHLOROETHANE	NH
EPA 8260 B 1996	1,1-DICHLOROPROPENE	NH
EPA 8260 B 1996	1,2,3-TRICHLOROPROPANE	NH
EPA 8260 B 1996	1,2,4-TRIMETHYLBENZENE	NH
EPA 8260 B 1996	1,2-DIBROMOETHANE (EDB, ETHYLENE DIBROMIDE)	NH
EPA 8260 B 1996	1,2-DICHLOROETHANE (ETHYLENE DICHLORIDE)	NH
EPA 8260 B 1996	1,3,5-TRIMETHYLBENZENE	NH
EPA 8260 B 1996	1,3-DICHLOROPROPANE	NH
EPA 8260 B 1996	1,4-DIOXANE (1,4-DIETHYLENEOXIDE)	NH
EPA 8260 B 1996	2-BUTANONE (METHYL ETHYL KETONE, MEK)	NH
EPA 8260 B 1996	2-CHLOROTOLUENE	NH
EPA 8260 B 1996	4-ISOPROPYLTOLUENE (P-CYMENE)	NH
EPA 8260 B 1996	ACETONE	NH
EPA 8260 B 1996	ACROLEIN (PROPENAL)	NH
EPA 8260 B 1996	ALLYL CHLORIDE (3-CHLOROPROPENE)	NH
EPA 8260 B 1996	BROMOBENZENE	NH
EPA 8260 B 1996	BROMODICHLOROMETHANE	NH
EPA 8260 B 1996	CARBON DISULFIDE	NH
EPA 8260 B 1996	CHLOROBENZENE	NH
EPA 8260 B 1996	CHLOROETHANE (ETHYL CHLORIDE)	NH
EPA 8260 B 1996	CHLOROPRENE (2-CHLORO-1,3-BUTADIENE)	NH
EPA 8260 B 1996	CIS-1,3-DICHLOROPROPENE	NH
EPA 8260 B 1996	DICHLORODIFLUOROMETHANE (FREON-12)	NH
EPA 8260 B 1996	ETHYL METHACRYLATE	NH
EPA 8260 B 1996	HEXACHLOROBUTADIENE (1,3-HEXACHLOROBUTADIENE)	NH

METHOD	ANALYTE	PRIMARY
EPA 8151 A (12/96)	DALAPON	NH
EPA 8151 A (12/96)	DICHLOROPROP (DICHLORPROP)	NH
EPA 8151 A (12/96)	MCPA	NH
EPA 8151 A (12/96)	SILVEX (2,4,5-TP)	NH
EPA 8260 B 1996	1,1,1-TRICHLOROETHANE	NH
EPA 8260 B 1996	1,1,2-TRICHLOROETHANE	NH
EPA 8260 B 1996	1,1-DICHLOROETHYLENE	NH
EPA 8260 B 1996	1,2,3-TRICHLOROBENZENE	NH
EPA 8260 B 1996	1,2,4-TRICHLOROBENZENE	NH
EPA 8260 B 1996	1,2-DIBROMO-3-CHLOROPROPANE (DBCP)	NH
EPA 8260 B 1996	1,2-DICHLOROBENZENE	NH
EPA 8260 B 1996	1,2-DICHLOROPROPANE	NH
EPA 8260 B 1996	1,3-DICHLOROBENZENE	NH
EPA 8260 B 1996	1,4-DICHLOROBENZENE	NH
EPA 8260 B 1996	2,2-DICHLOROPROPANE	NH
EPA 8260 B 1996	2-CHLOROETHYL VINYL ETHER	NH
EPA 8260 B 1996	2-HEXANONE	NH
EPA 8260 B 1996	4-METHYL-2-PENTANONE (MIBK)	NH
EPA 8260 B 1996	ACETONITRILE	NH
EPA 8260 B 1996	ACRYLONITRILE	NH
EPA 8260 B 1996	BENZENE	NH
EPA 8260 B 1996	BROMOCHLOROMETHANE	NH
EPA 8260 B 1996	BROMOFORM	NH
EPA 8260 B 1996	CARBON TETRACHLORIDE	NH
EPA 8260 B 1996	CHLORODIBROMOMETHANE	NH
EPA 8260 B 1996	CHLOROFORM	NH
EPA 8260 B 1996	CIS-1,2-DICHLOROETHYLENE	NH
EPA 8260 B 1996	DIBROMOMETHANE (METHYLENE BROMIDE)	NH
EPA 8260 B 1996	DIETHYL ETHER	NH
EPA 8260 B 1996	ETHYLBENZENE	NH
EPA 8260 B 1996	IODOMETHANE (METHYL IODIDE)	NH

Scope of Accreditation

VELAP Certificate No.: 2457

KATAHDIN ANALYTICAL SERVICES, INC.
600 TECHNOLOGY WAY
SCARBOROUGH, ME 04074

Virginia Laboratory ID: 460179
Effective Date: September 15, 2013
Expiration Date: September 14, 2014

SOLID AND CHEMICAL MATERIALS

METHOD	ANALYTE	PRIMARY
EPA 8260 B 1996	ISOBUTYL ALCOHOL (2-METHYL-1-PROPANOL)	NH
EPA 8260 B 1996	METHACRYLONITRILE	NH
EPA 8260 B 1996	METHYL CHLORIDE (CHLOROMETHANE)	NH
EPA 8260 B 1996	METHYL TERT-BUTYL ETHER (MTBE)	NH
EPA 8260 B 1996	N-BUTYLBENZENE	NH
EPA 8260 B 1996	NAPHTHALENE	NH
EPA 8260 B 1996	PROPIONITRILE (ETHYL CYANIDE)	NH
EPA 8260 B 1996	STYRENE	NH
EPA 8260 B 1996	TERT-BUTYLBENZENE	NH
EPA 8260 B 1996	TOLUENE	NH
EPA 8260 B 1996	TRANS-1,3-DICHLOROPROPENE	NH
EPA 8260 B 1996	TRICHLOROETHENE (TRICHLOROETHYLENE)	NH
EPA 8260 B 1996	VINYL ACETATE	NH
EPA 8260 B 1996	XYLENE (TOTAL)	NH
EPA 8260 B - EXTENDED 1996	ETHYL-T-BUTYLETHER (2-ETHOXY-2-METHYLPROPANE, ETBE)	NH
EPA 8260 C 2006	1,1,1,2-TETRACHLOROETHANE	NH
EPA 8260 C 2006	1,1,2,2-TETRACHLOROETHANE	NH
EPA 8260 C 2006	1,1-DICHLOROETHANE	NH
EPA 8260 C 2006	1,1-DICHLOROPROPENE	NH
EPA 8260 C 2006	1,2,3-TRICHLOROPROPANE	NH
EPA 8260 C 2006	1,2,4-TRIMETHYLBENZENE	NH
EPA 8260 C 2006	1,2-DIBROMOETHANE (EDB, ETHYLENE DIBROMIDE)	NH
EPA 8260 C 2006	1,2-DICHLOROETHANE (ETHYLENE DICHLORIDE)	NH
EPA 8260 C 2006	1,3,5-TRIMETHYLBENZENE	NH
EPA 8260 C 2006	1,3-DICHLOROPROPANE	NH
EPA 8260 C 2006	1,4-DIOXANE (1,4-DIETHYLENEOXIDE)	NH
EPA 8260 C 2006	2-BUTANONE (METHYL ETHYL KETONE, MEK)	NH
EPA 8260 C 2006	2-CHLOROTOLUENE	NH
EPA 8260 C 2006	4-ISOPROPYLTOLUENE (P-CYMENE)	NH

METHOD	ANALYTE	PRIMARY
EPA 8260 B 1996	ISOPROPYLBENZENE	NH
EPA 8260 B 1996	METHYL BROMIDE (BROMOMETHANE)	NH
EPA 8260 B 1996	METHYL METHACRYLATE	NH
EPA 8260 B 1996	METHYLENE CHLORIDE (DICHLOROMETHANE)	NH
EPA 8260 B 1996	N-PROPYLBENZENE	NH
EPA 8260 B 1996	PENTACHLOROETHANE	NH
EPA 8260 B 1996	SEC-BUTYLBENZENE	NH
EPA 8260 B 1996	TERT-BUTYL ALCOHOL	NH
EPA 8260 B 1996	TETRACHLOROETHENE (PERCHLOROETHENE)	NH
EPA 8260 B 1996	TRANS-1,2-DICHLOROETHENE	NH
EPA 8260 B 1996	TRANS-1,4-DICHLORO-2-BUTENE	NH
EPA 8260 B 1996	TRICHLOROFLUOROMETHANE (FLUOROTRICHLOROMETHANE, FREON 11)	NH
EPA 8260 B 1996	VINYL CHLORIDE	NH
EPA 8260 B - EXTENDED 1996	DI-ISOPROPYLETHER (DIPE, ISOPROPYL ETHER)	NH
EPA 8260 B - EXTENDED 1996	T-AMYLMETHYLETHER (TAME)	NH
EPA 8260 C 2006	1,1,1-TRICHLOROETHANE	NH
EPA 8260 C 2006	1,1,2-TRICHLOROETHANE	NH
EPA 8260 C 2006	1,1-DICHLOROETHYLENE	NH
EPA 8260 C 2006	1,2,3-TRICHLOROBENZENE	NH
EPA 8260 C 2006	1,2,4-TRICHLOROBENZENE	NH
EPA 8260 C 2006	1,2-DIBROMO-3-CHLOROPROPANE (DBCP)	NH
EPA 8260 C 2006	1,2-DICHLOROBENZENE	NH
EPA 8260 C 2006	1,2-DICHLOROPROPANE	NH
EPA 8260 C 2006	1,3-DICHLOROBENZENE	NH
EPA 8260 C 2006	1,4-DICHLOROBENZENE	NH
EPA 8260 C 2006	2,2-DICHLOROPROPANE	NH
EPA 8260 C 2006	2-CHLOROETHYL VINYL ETHER	NH
EPA 8260 C 2006	2-HEXANONE	NH
EPA 8260 C 2006	ACETONE	NH

Commonwealth of Virginia

Department of General Services
Division of Consolidated Laboratory Services

Scope of Accreditation

VELAP Certificate No.: 2457

KATAHDIN ANALYTICAL SERVICES, INC.
600 TECHNOLOGY WAY
SCARBOROUGH, ME 04074

Virginia Laboratory ID: 460179
Effective Date: September 15, 2013
Expiration Date: September 14, 2014

SOLID AND CHEMICAL MATERIALS

METHOD	ANALYTE	PRIMARY
EPA 8260 C 2006	ACETONITRILE	NH
EPA 8260 C 2006	ACRYLONITRILE	NH
EPA 8260 C 2006	BROMOBENZENE	NH
EPA 8260 C 2006	BROMODICHLOROMETHANE	NH
EPA 8260 C 2006	CARBON DISULFIDE	NH
EPA 8260 C 2006	CHLOROBENZENE	NH
EPA 8260 C 2006	CHLOROPRENE (2-CHLORO-1,3-BUTADIENE)	NH
EPA 8260 C 2006	CIS-1,3-DICHLOROPROPENE	NH
EPA 8260 C 2006	DICHLORODIFLUOROMETHANE (FREON-12)	NH
EPA 8260 C 2006	ETHYL-T-BUTYLETHER (2-ETHOXY-2-METHYLPROPANE, ETBE)	NH
EPA 8260 C 2006	HEXACHLOROBUTADIENE (1,3-HEXACHLOROBUTADIENE)	NH
EPA 8260 C 2006	ISOBUTYL ALCOHOL (2-METHYL-1-PROPANOL)	NH
EPA 8260 C 2006	METHACRYLONITRILE	NH
EPA 8260 C 2006	METHYL CHLORIDE (CHLOROMETHANE)	NH
EPA 8260 C 2006	METHYL TERT-BUTYL ETHER (MTBE)	NH
EPA 8260 C 2006	N-BUTYLBENZENE	NH
EPA 8260 C 2006	PENTACHLOROETHANE	NH
EPA 8260 C 2006	PYRIDINE	NH
EPA 8260 C 2006	STYRENE	NH
EPA 8260 C 2006	TERT-BUTYLBENZENE	NH
EPA 8260 C 2006	TOLUENE	NH
EPA 8260 C 2006	TRANS-1,3-DICHLOROPROPENE	NH
EPA 8260 C 2006	TRICHLOROFLUOROMETHANE (FLUOROTRICHLOROMETHANE, FREON 11)	NH
EPA 8260 C 2006	VINYL CHLORIDE	NH
EPA 8260 C - EXTENDED 2006	DI-ISOPROPYLETHER (DIPE, ISOPROPYL ETHER)	NH
EPA 8270 C 1996	1,2,4-TRICHLOROBENZENE	NH
EPA 8270 C 1996	1,2-DIPHENYLHYDRAZINE	NH
EPA 8270 C 1996	1,3-DICHLOROBENZENE	NH
EPA 8270 C 1996	1,4-NAPHTHOQUINONE	NH

METHOD	ANALYTE	PRIMARY
EPA 8260 C 2006	ACROLEIN (PROPENAL)	NH
EPA 8260 C 2006	BENZENE	NH
EPA 8260 C 2006	BROMOCHLOROMETHANE	NH
EPA 8260 C 2006	BROMOFORM	NH
EPA 8260 C 2006	CARBON TETRACHLORIDE	NH
EPA 8260 C 2006	CHLOROFORM	NH
EPA 8260 C 2006	CIS-1,2-DICHLOROETHYLENE	NH
EPA 8260 C 2006	DIBROMOMETHANE (METHYLENE BROMIDE)	NH
EPA 8260 C 2006	ETHYL METHACRYLATE	NH
EPA 8260 C 2006	ETHYLBENZENE	NH
EPA 8260 C 2006	IODOMETHANE (METHYL IODIDE)	NH
EPA 8260 C 2006	ISOPROPYL ALCOHOL (2-PROPANOL, ISOPROPANOL)	NH
EPA 8260 C 2006	METHYL BROMIDE (BROMOMETHANE)	NH
EPA 8260 C 2006	METHYL METHACRYLATE	NH
EPA 8260 C 2006	METHYLENE CHLORIDE (DICHLOROMETHANE)	NH
EPA 8260 C 2006	NAPHTHALENE	NH
EPA 8260 C 2006	PROPIONITRILE (ETHYL CYANIDE)	NH
EPA 8260 C 2006	SEC-BUTYLBENZENE	NH
EPA 8260 C 2006	TERT-BUTYL ALCOHOL	NH
EPA 8260 C 2006	TETRACHLOROETHENE (PERCHLOROETHENE)	NH
EPA 8260 C 2006	TRANS-1,2-DICHLOROETHENE	NH
EPA 8260 C 2006	TRICHLOROETHENE (TRICHLOROETHYLENE)	NH
EPA 8260 C 2006	VINYL ACETATE	NH
EPA 8260 C 2006	XYLENE (TOTAL)	NH
EPA 8260 C - EXTENDED 2006	TETRAHYDROFURAN (THF)	NH
EPA 8270 C 1996	1,2-DICHLOROBENZENE	NH
EPA 8270 C 1996	1,3,5-TRINITROBENZENE (1,3,5-TNB)	NH
EPA 8270 C 1996	1,4-DICHLOROBENZENE	NH
EPA 8270 C 1996	1,4-PHENYLENEDIAMINE	NH

Commonwealth of Virginia

Department of General Services
Division of Consolidated Laboratory Services

Scope of Accreditation

VELAP Certificate No.: 2457

KATAHDIN ANALYTICAL SERVICES, INC.
600 TECHNOLOGY WAY
SCARBOROUGH, ME 04074

Virginia Laboratory ID: 460179
Effective Date: September 15, 2013
Expiration Date: September 14, 2014

SOLID AND CHEMICAL MATERIALS

METHOD	ANALYTE	PRIMARY
EPA 8270 C 1996	1-NAPHTHYLAMINE	NH
EPA 8270 C 1996	2,4,5-TRICHLOROPHENOL	NH
EPA 8270 C 1996	2,4-DICHLOROPHENOL	NH
EPA 8270 C 1996	2,4-DINITROPHENOL	NH
EPA 8270 C 1996	2,6-DICHLOROPHENOL	NH
EPA 8270 C 1996	2-ACETYLAMINOFLUORENE	NH
EPA 8270 C 1996	2-CHLOROPHENOL	NH
EPA 8270 C 1996	2-METHYLNAPHTHALENE	NH
EPA 8270 C 1996	2-NAPHTHYLAMINE	NH
EPA 8270 C 1996	2-NITROPHENOL	NH
EPA 8270 C 1996	3,3'-DICHLOROBENZIDINE	NH
EPA 8270 C 1996	3-METHYLCHOLANTHRENE	NH
EPA 8270 C 1996	4-AMINOBIPHENYL	NH
EPA 8270 C 1996	4-CHLORO-3-METHYLPHENOL	NH
EPA 8270 C 1996	4-CHLOROPHENYL PHENYLETHER	NH
EPA 8270 C 1996	4-METHYLPHENOL (P-CRESOL)	NH
EPA 8270 C 1996	4-NITROPHENOL	NH
EPA 8270 C 1996	7,12-DIMETHYLBENZ(A) ANTHRACENE	NH
EPA 8270 C 1996	ACENAPHTHENE	NH
EPA 8270 C 1996	ACETOPHENONE	NH
EPA 8270 C 1996	ANTHRACENE	NH
EPA 8270 C 1996	BENZIDINE	NH
EPA 8270 C 1996	BENZO(A)PYRENE	NH
EPA 8270 C 1996	BENZO(K)FLUORANTHENE	NH
EPA 8270 C 1996	BENZO[B]FLUORANTHENE	NH
EPA 8270 C 1996	BIS(2-CHLOROETHOXY)METHANE	NH
EPA 8270 C 1996	BIS(2-CHLOROISOPROPYL) ETHER	NH
EPA 8270 C 1996	BUTYL BENZYL PHTHALATE	NH
EPA 8270 C 1996	DI-N-BUTYL PHTHALATE	NH
EPA 8270 C 1996	DIALLATE	NH
EPA 8270 C 1996	DIBENZOFURAN	NH
EPA 8270 C 1996	DIMETHOATE	NH
EPA 8270 C 1996	DINOSEB (2-SEC-BUTYL-4,6-DINITROPHENOL, DNBP)	NH
EPA 8270 C 1996	FAMPHUR	NH

METHOD	ANALYTE	PRIMARY
EPA 8270 C 1996	2,3,4,6-TETRACHLOROPHENOL	NH
EPA 8270 C 1996	2,4,6-TRICHLOROPHENOL	NH
EPA 8270 C 1996	2,4-DIMETHYLPHENOL	NH
EPA 8270 C 1996	2,4-DINITROTOLUENE (2,4-DNT)	NH
EPA 8270 C 1996	2,6-DINITROTOLUENE (2,6-DNT)	NH
EPA 8270 C 1996	2-CHLORONAPHTHALENE	NH
EPA 8270 C 1996	2-METHYL-4,6-DINITROPHENOL (4,6-DINITRO-2-METHYLPHENOL)	NH
EPA 8270 C 1996	2-METHYLPHENOL (O-CRESOL)	NH
EPA 8270 C 1996	2-NITROANILINE	NH
EPA 8270 C 1996	2-PICOLINE (2-METHYLPYRIDINE)	NH
EPA 8270 C 1996	3,3'-DIMETHYLBENZIDINE	NH
EPA 8270 C 1996	3-NITROANILINE	NH
EPA 8270 C 1996	4-BROMOPHENYL PHENYL ETHER	NH
EPA 8270 C 1996	4-CHLOROANILINE	NH
EPA 8270 C 1996	4-DIMETHYL AMINOAZOBENZENE	NH
EPA 8270 C 1996	4-NITROANILINE	NH
EPA 8270 C 1996	5-NITRO-O-TOLUIDINE	NH
EPA 8270 C 1996	A-A-DIMETHYLPHENETHYLAMINE	NH
EPA 8270 C 1996	ACENAPHTHYLENE	NH
EPA 8270 C 1996	ANILINE	NH
EPA 8270 C 1996	ARAMITE	NH
EPA 8270 C 1996	BENZO(A)ANTHRACENE	NH
EPA 8270 C 1996	BENZO(G,H,I)PERYLENE	NH
EPA 8270 C 1996	BENZOIC ACID	NH
EPA 8270 C 1996	BENZYL ALCOHOL	NH
EPA 8270 C 1996	BIS(2-CHLOROETHYL) ETHER	NH
EPA 8270 C 1996	BIS(2-ETHYLHEXYL) PHTHALATE (DI(2-ETHYLHEXYL)PHTHALATE), (DEHP)	NH
EPA 8270 C 1996	CHRYSENE	NH
EPA 8270 C 1996	DI-N-OCTYL PHTHALATE	NH
EPA 8270 C 1996	DIBENZO(A,H) ANTHRACENE	NH
EPA 8270 C 1996	DIETHYL PHTHALATE	NH
EPA 8270 C 1996	DIMETHYL PHTHALATE	NH
EPA 8270 C 1996	ETHYL METHANESULFONATE	NH
EPA 8270 C 1996	FLUORANTHENE	NH

KATAHDIN ANALYTICAL SERVICES, INC.
600 TECHNOLOGY WAY
SCARBOROUGH, ME 04074

Virginia Laboratory ID: 460179
Effective Date: September 15, 2013
Expiration Date: September 14, 2014

SOLID AND CHEMICAL MATERIALS

METHOD	ANALYTE	PRIMARY
EPA 8270 C 1996	FLUORENE	NH
EPA 8270 C 1996	HEXACHLOROBUTADIENE (1,3-HEXACHLOROBUTADIENE)	NH
EPA 8270 C 1996	HEXACHLOROETHANE	NH
EPA 8270 C 1996	INDENO(1,2,3-CD) PYRENE	NH
EPA 8270 C 1996	ISOPHORONE	NH
EPA 8270 C 1996	KEPONE	NH
EPA 8270 C 1996	METHYL METHANESULFONATE	NH
EPA 8270 C 1996	N-NITROSO-DI-N-BUTYLAMINE	NH
EPA 8270 C 1996	N-NITROSODIETHYLAMINE	NH
EPA 8270 C 1996	N-NITROSOMETHYLETHYLAMINE	NH
EPA 8270 C 1996	N-NITROSOPIPERIDINE	NH
EPA 8270 C 1996	NAPHTHALENE	NH
EPA 8270 C 1996	NITROQUINOLINE-1-OXIDE	NH
EPA 8270 C 1996	O-TOLUIDINE (2-METHYLANILINE)	NH
EPA 8270 C 1996	PENTACHLORONITROBENZENE	NH
EPA 8270 C 1996	PHENACETIN	NH
EPA 8270 C 1996	PHENOL	NH
EPA 8270 C 1996	PYRENE	NH
EPA 8270 C 1996	SULFOTEPP (TETRAETHYL DITHIOPYROPHOSPHATE)	NH
EPA 8270 D (2/07)	1,2,4,5-TETRACHLOROBENZENE	NH
EPA 8270 D (2/07)	1,2-DICHLOROBENZENE	NH
EPA 8270 D (2/07)	1,3,5-TRINITROBENZENE (1,3,5-TNB)	NH
EPA 8270 D (2/07)	1,4-DICHLOROBENZENE	NH
EPA 8270 D (2/07)	1,4-PHENYLENEDIAMINE	NH
EPA 8270 D (2/07)	2,3,4,6-TETRACHLOROPHENOL	NH
EPA 8270 D (2/07)	2,4,6-TRICHLOROPHENOL	NH
EPA 8270 D (2/07)	2,4-DIMETHYLPHENOL	NH
EPA 8270 D (2/07)	2,4-DINITROTOLUENE (2,4-DNT)	NH
EPA 8270 D (2/07)	2,6-DINITROTOLUENE (2,6-DNT)	NH
EPA 8270 D (2/07)	2-CHLORONAPHTHALENE	NH
EPA 8270 D (2/07)	2-METHYL-4,6-DINITROPHENOL (4,6-DINITRO-2-METHYLPHENOL)	NH
EPA 8270 D (2/07)	2-METHYLPHENOL (O-CRESOL)	NH
EPA 8270 D (2/07)	2-NITROANILINE	NH
EPA 8270 D (2/07)	2-PICOLINE (2-METHYLPYRIDINE)	NH
EPA 8270 D (2/07)	3,3'-DIMETHYLBENZIDINE	NH
EPA 8270 D (2/07)	3-NITROANILINE	NH

METHOD	ANALYTE	PRIMARY
EPA 8270 C 1996	HEXACHLOROBENZENE	NH
EPA 8270 C 1996	HEXACHLOROCYCLOPENTADIENE	NH
EPA 8270 C 1996	HEXACHLOROPROPENE	NH
EPA 8270 C 1996	ISODRIN	NH
EPA 8270 C 1996	ISOSAFROLE	NH
EPA 8270 C 1996	METHAPYRILENE	NH
EPA 8270 C 1996	METHYL PARATHION (PARATHION, METHYL)	NH
EPA 8270 C 1996	N-NITROSODI-N-PROPYLAMINE	NH
EPA 8270 C 1996	N-NITROSODIMETHYLAMINE	NH
EPA 8270 C 1996	N-NITROSOMORPHOLINE	NH
EPA 8270 C 1996	N-NITROSOPYRROLIDINE	NH
EPA 8270 C 1996	NITROBENZENE	NH
EPA 8270 C 1996	O,O,O-TRIETHYL PHOSPHOROTHIOATE	NH
EPA 8270 C 1996	PENTACHLOROBENZENE	NH
EPA 8270 C 1996	PENTACHLOROPHENOL	NH
EPA 8270 C 1996	PHENANTHRENE	NH
EPA 8270 C 1996	PRONAMIDE (KERB)	NH
EPA 8270 C 1996	SAFROLE	NH
EPA 8270 C 1996	THIONAZIN (ZINOPHOS)	NH
EPA 8270 D (2/07)	1,2,4-TRICHLOROBENZENE	NH
EPA 8270 D (2/07)	1,2-DIPHENYLHYDRAZINE	NH
EPA 8270 D (2/07)	1,3-DICHLOROBENZENE	NH
EPA 8270 D (2/07)	1,4-NAPHTHOQUINONE	NH
EPA 8270 D (2/07)	1-NAPHTHYLAMINE	NH
EPA 8270 D (2/07)	2,4,5-TRICHLOROPHENOL	NH
EPA 8270 D (2/07)	2,4-DICHLOROPHENOL	NH
EPA 8270 D (2/07)	2,4-DINITROPHENOL	NH
EPA 8270 D (2/07)	2,6-DICHLOROPHENOL	NH
EPA 8270 D (2/07)	2-ACETYLAMINOFLUORENE	NH
EPA 8270 D (2/07)	2-CHLOROPHENOL	NH
EPA 8270 D (2/07)	2-METHYLNAPHTHALENE	NH
EPA 8270 D (2/07)	2-NAPHTHYLAMINE	NH
EPA 8270 D (2/07)	2-NITROPHENOL	NH
EPA 8270 D (2/07)	3,3'-DICHLOROBENZIDINE	NH
EPA 8270 D (2/07)	3-METHYLCHOLANTHRENE	NH
EPA 8270 D (2/07)	4-AMINOBIPHENYL	NH

KATAHDIN ANALYTICAL SERVICES, INC.
600 TECHNOLOGY WAY
SCARBOROUGH, ME 04074

Virginia Laboratory ID: 460179
Effective Date: September 15, 2013
Expiration Date: September 14, 2014

SOLID AND CHEMICAL MATERIALS

METHOD	ANALYTE	PRIMARY
EPA 8270 D (2/07)	4-BROMOPHENYL PHENYL ETHER	NH
EPA 8270 D (2/07)	4-CHLOROANILINE	NH
EPA 8270 D (2/07)	4-DIMETHYL AMINOAZOBENZENE	NH
EPA 8270 D (2/07)	4-NITROANILINE	NH
EPA 8270 D (2/07)	5-NITRO-O-TOLUIDINE	NH
EPA 8270 D (2/07)	A-A-DIMETHYLPHENETHYLAMINE	NH
EPA 8270 D (2/07)	ACENAPHTHYLENE	NH
EPA 8270 D (2/07)	ANILINE	NH
EPA 8270 D (2/07)	ARAMITE	NH
EPA 8270 D (2/07)	BENZO(A)ANTHRACENE	NH
EPA 8270 D (2/07)	BENZO(G,H,I)PERYLENE	NH
EPA 8270 D (2/07)	BENZOIC ACID	NH
EPA 8270 D (2/07)	BENZYL ALCOHOL	NH
EPA 8270 D (2/07)	BIS(2-CHLOROETHYL) ETHER	NH
EPA 8270 D (2/07)	BIS(2-ETHYLHEXYL) PHTHALATE (DI(2-ETHYLHEXYL)PHTHALATE), (DEHP)	NH
EPA 8270 D (2/07)	CHRYSENE	NH
EPA 8270 D (2/07)	DI-N-OCTYL PHTHALATE	NH
EPA 8270 D (2/07)	DIBENZO(A,H) ANTHRACENE	NH
EPA 8270 D (2/07)	DIETHYL PHTHALATE	NH
EPA 8270 D (2/07)	DIMETHYL PHTHALATE	NH
EPA 8270 D (2/07)	ETHYL METHANESULFONATE	NH
EPA 8270 D (2/07)	FLUORANTHENE	NH
EPA 8270 D (2/07)	HEXACHLOROBENZENE	NH
EPA 8270 D (2/07)	HEXACHLOROCYCLOPENTADIENE	NH
EPA 8270 D (2/07)	HEXACHLOROPROPENE	NH
EPA 8270 D (2/07)	ISODRIN	NH
EPA 8270 D (2/07)	ISOSAFROLE	NH
EPA 8270 D (2/07)	METHAPYRILENE	NH
EPA 8270 D (2/07)	METHYL PARATHION (PARATHION, METHYL)	NH
EPA 8270 D (2/07)	N-NITROSODI-N-PROPYLAMINE	NH
EPA 8270 D (2/07)	N-NITROSODIMETHYLAMINE	NH
EPA 8270 D (2/07)	N-NITROSOMORPHOLINE	NH
EPA 8270 D (2/07)	N-NITROSOPYRROLIDINE	NH

METHOD	ANALYTE	PRIMARY
EPA 8270 D (2/07)	4-CHLORO-3-METHYLPHENOL	NH
EPA 8270 D (2/07)	4-CHLOROPHENYL PHENYLETHER	NH
EPA 8270 D (2/07)	4-METHYLPHENOL (P-CRESOL)	NH
EPA 8270 D (2/07)	4-NITROPHENOL	NH
EPA 8270 D (2/07)	7,12-DIMETHYLBENZ(A) ANTHRACENE	NH
EPA 8270 D (2/07)	ACENAPHTHENE	NH
EPA 8270 D (2/07)	ACETOPHENONE	NH
EPA 8270 D (2/07)	ANTHRACENE	NH
EPA 8270 D (2/07)	BENZIDINE	NH
EPA 8270 D (2/07)	BENZO(A)PYRENE	NH
EPA 8270 D (2/07)	BENZO(K)FLUORANTHENE	NH
EPA 8270 D (2/07)	BENZO[B]FLUORANTHENE	NH
EPA 8270 D (2/07)	BIS(2-CHLOROETHOXY)METHANE	NH
EPA 8270 D (2/07)	BIS(2-CHLOROISOPROPYL) ETHER	NH
EPA 8270 D (2/07)	BUTYL BENZYL PHTHALATE	NH
EPA 8270 D (2/07)	DI-N-BUTYL PHTHALATE	NH
EPA 8270 D (2/07)	DIALLATE	NH
EPA 8270 D (2/07)	DIBENZOFURAN	NH
EPA 8270 D (2/07)	DIMETHOATE	NH
EPA 8270 D (2/07)	DINOSEB (2-SEC-BUTYL-4,6-DINITROPHENOL, DNBP)	NH
EPA 8270 D (2/07)	FAMPHUR	NH
EPA 8270 D (2/07)	FLUORENE	NH
EPA 8270 D (2/07)	HEXACHLOROBUTADIENE (1,3-HEXACHLOROBUTADIENE)	NH
EPA 8270 D (2/07)	HEXACHLOROETHANE	NH
EPA 8270 D (2/07)	INDENO(1,2,3-CD) PYRENE	NH
EPA 8270 D (2/07)	ISOPHORONE	NH
EPA 8270 D (2/07)	KEPONE	NH
EPA 8270 D (2/07)	METHYL METHANESULFONATE	NH
EPA 8270 D (2/07)	N-NITROSO-DI-N-BUTYLAMINE	NH
EPA 8270 D (2/07)	N-NITROSODIETHYLAMINE	NH
EPA 8270 D (2/07)	N-NITROSOMETHYLETHYLAMINE	NH
EPA 8270 D (2/07)	N-NITROSOPIPERIDINE	NH
EPA 8270 D (2/07)	NAPHTHALENE	NH

KATAHDIN ANALYTICAL SERVICES, INC.
600 TECHNOLOGY WAY
SCARBOROUGH, ME 04074

Virginia Laboratory ID: 460179
Effective Date: September 15, 2013
Expiration Date: September 14, 2014

SOLID AND CHEMICAL MATERIALS

METHOD	ANALYTE	PRIMARY
EPA 8270 D (2/07)	NITROBENZENE	NH
EPA 8270 D (2/07)	O,O,O-TRIETHYL PHOSPHOROTHIOATE	NH
EPA 8270 D (2/07)	PENTACHLOROBENZENE	NH
EPA 8270 D (2/07)	PENTACHLOROPHENOL	NH
EPA 8270 D (2/07)	PHENANTHRENE	NH
EPA 8270 D (2/07)	PHORATE	NH
EPA 8270 D (2/07)	PYRENE	NH
EPA 8270 D (2/07)	SULFOTEPP (TETRAETHYL DITHIOPYROPHOSPHATE)	NH
EPA 8330 (9/94)	1,3,5-TRINITROBENZENE (1,3,5-TNB)	NH
EPA 8330 (9/94)	2,4,6-TRINITROTOLUENE (2,4,6-TNT)	NH
EPA 8330 (9/94)	2,6-DINITROTOLUENE (2,6-DNT)	NH
EPA 8330 (9/94)	2-NITROTOLUENE	NH
EPA 8330 (9/94)	4-AMINO-2,6-DINITROTOLUENE (4-AM-DNT)	NH
EPA 8330 (9/94)	METHYL-2,4,6-TRINITROPHENYLN ITRAMINE (TETRYL)	NH
EPA 8330 (9/94)	NITROGLYCERIN	NH
EPA 8330 (9/94)	RDX (HEXAHYDRO-1,3,5-TRINITRO-1,3, 5-TRIAZINE)	NH
EPA 8330 B (10/06)	1,3-DINITROBENZENE (1,3-DNB)	NH
EPA 8330 B (10/06)	2,4-DINITROTOLUENE (2,4-DNT)	NH
EPA 8330 B (10/06)	2-AMINO-4,6-DINITROTOLUENE (2-AM-DNT)	NH
EPA 8330 B (10/06)	3-NITROTOLUENE	NH
EPA 8330 B (10/06)	4-NITROTOLUENE	NH
EPA 8330 B (10/06)	NITROBENZENE	NH
EPA 8330 B (10/06)	OCTAHYDRO-1,3,5,7-TETRANITRO -1,3,5,7-TETRAZOCINE (HMX)	NH
EPA 9038 1986	SULFATE	NH
EPA 9045 D 2004	PH	NH
EPA 9056 (9/94)	CHLORIDE	NH
EPA 9056 (9/94)	NITRITE	NH
EPA 9056 (9/94)	SULFATE	NH
EPA 9060 (9/86)	TOTAL ORGANIC CARBON	NH
EPA 9071 B (4/98)	OIL & GREASE	NH

METHOD	ANALYTE	PRIMARY
EPA 8270 D (2/07)	NITROQUINOLINE-1-OXIDE	NH
EPA 8270 D (2/07)	O-TOLUIDINE (2-METHYLANILINE)	NH
EPA 8270 D (2/07)	PENTACHLORONITROBENZENE	NH
EPA 8270 D (2/07)	PHENACETIN	NH
EPA 8270 D (2/07)	PHENOL	NH
EPA 8270 D (2/07)	PRONAMIDE (KERB)	NH
EPA 8270 D (2/07)	SAFROLE	NH
EPA 8270 D (2/07)	THIONAZIN (ZINOPHOS)	NH
EPA 8330 (9/94)	1,3-DINITROBENZENE (1,3-DNB)	NH
EPA 8330 (9/94)	2,4-DINITROTOLUENE (2,4-DNT)	NH
EPA 8330 (9/94)	2-AMINO-4,6-DINITROTOLUENE (2-AM-DNT)	NH
EPA 8330 (9/94)	3-NITROTOLUENE	NH
EPA 8330 (9/94)	4-NITROTOLUENE	NH
EPA 8330 (9/94)	NITROBENZENE	NH
EPA 8330 (9/94)	OCTAHYDRO-1,3,5,7-TETRANITRO -1,3,5,7-TETRAZOCINE (HMX)	NH
EPA 8330 B (10/06)	1,3,5-TRINITROBENZENE (1,3,5-TNB)	NH
EPA 8330 B (10/06)	2,4,6-TRINITROTOLUENE (2,4,6-TNT)	NH
EPA 8330 B (10/06)	2,6-DINITROTOLUENE (2,6-DNT)	NH
EPA 8330 B (10/06)	2-NITROTOLUENE	NH
EPA 8330 B (10/06)	4-AMINO-2,6-DINITROTOLUENE (4-AM-DNT)	NH
EPA 8330 B (10/06)	METHYL-2,4,6-TRINITROPHENYLN ITRAMINE (TETRYL)	NH
EPA 8330 B (10/06)	NITROGLYCERIN	NH
EPA 8330 B (10/06)	RDX (HEXAHYDRO-1,3,5-TRINITRO-1,3, 5-TRIAZINE)	NH
EPA 9040 B (1/95)	PH	NH
EPA 9056 (9/94)	BROMIDE	NH
EPA 9056 (9/94)	NITRATE AS N	NH
EPA 9056 (9/94)	ORTHOPHOSPHATE AS P	NH
EPA 9056 A 2/07	ORTHOPHOSPHATE AS P	NH
EPA 9065 1986	TOTAL PHENOLICS	NH
EPA 9095 B 2004	FREE LIQUID	NH

Commonwealth of Virginia

Department of General Services
Division of Consolidated Laboratory Services

Scope of Accreditation

VELAP Certificate No.: 2457

KATAHDIN ANALYTICAL SERVICES, INC.
600 TECHNOLOGY WAY
SCARBOROUGH, ME 04074

Virginia Laboratory ID: 460179
Effective Date: September 15, 2013
Expiration Date: September 14, 2014

SOLID AND CHEMICAL MATERIALS

METHOD	ANALYTE	PRIMARY	METHOD	ANALYTE	PRIMARY
EPA 9251 (9/86)	CHLORIDE	NH			

This Scope of Accreditation must accompany the Certificate issued by Virginia DCLS with the same Certificate Number indicated above.

PERRY JOHNSON LABORATORY ACCREDITATION, INC.

Certificate of Accreditation

Perry Johnson Laboratory Accreditation, Inc. has assessed the Laboratory of:

ALS Environmental-Rochester

1565 Jefferson Road, Building 300, Suite 360, Rochester, NY 14623

(Hereinafter called the Organization) and hereby declares that Organization has met the requirements of ISO/IEC 17025:2005 "General Requirements for the competence of Testing and Calibration Laboratories" and the DoD Quality Systems Manual for Environmental Laboratories Version 4.2 10/26/10 and is accredited is accordance with the:

United States Department of Defense Environmental Laboratory Accreditation Program (DoD-ELAP)

This accreditation demonstrates technical competence for the defined scope:

Environmental Testing

(As detailed in the supplement)

Accreditation claims for such testing and/or calibration services shall only be made from addresses referenced within this certificate. This Accreditation is granted subject to the system rules governing the Accreditation referred to above, and the Organization hereby covenants with the Accreditation body's duty to observe and comply with the said rules.

For PJLA:

Initial Accreditation Date:	*Issue Date:*
January 22, 2010	April 7, 2012

Accreditation No.:	Certificate No.:	Revision Date:
65817	L12-48 R1	May 8, 2013

Tracy Szerszen
President/Operations Manager

Perry Johnson Laboratory
Accreditation, Inc. (PJLA)
755 W. Big Beaver, Suite 1325
Troy, Michigan 48084

The validity of this certificate is maintained through ongoing assessments based on a continuous accreditation cycle. The validity of this certificate should be confirmed through the PJLA website: www.pjlabs.com

Certificate of Accreditation: Supplement

ISO/IEC 17025:2005 and DoD-ELAP

ALS Environmental-Rochester

1565 Jefferson Road, Building 300, Suite 360, Rochester, NY 14623
Lisa Reyes Phone: 585-288-5380

Accreditation is granted to the facility to perform the following testing:

Matrix	Standard/Method	Technology	Analyte
Aqueous	(CAS SOP) GEN-TICW	UV-VIS	Total inorganic carbon
Aqueous	EPA 1631	CVAFS	Mercury
Aqueous	EPA 1664A	Gravimetric	Oil and grease
Aqueous	EPA 1664A	Gravimetric	Total petroleum hydrocarbons
Aqueous	EPA 218.6	IC-UV	Chromium, Hexavalent
Aqueous	EPA 218.7	IC-UV	Chromium, Hexavalent
Aqueous	EPA 245.1	CVAA	Mercury
Aqueous	EPA 300.0	IC	Chloride
Aqueous	EPA 300.0	IC	Fluoride
Aqueous	EPA 300.0	IC	Nitrate
Aqueous	EPA 300.0	IC	Sulfate
Aqueous	EPA 350.1	Colorimetric	Ammonia
Aqueous	EPA 351.2	UV-VIS	Nitrogen, total Kjeldahl
Aqueous	EPA 353.2	UV-VIS	Nitrite as N
Aqueous	EPA 410.4	UV-VIS	Chemical oxygen demand
Aqueous	EPA 522	GC-MS-SIM	1,4-Dioxane
Aqueous	EPA 7470A	CVAA	Mercury
Aqueous	EPA 8151A	GC-ECD	Dinoseb
Aqueous	EPA 8260C	GC-MS-SIM	1,1-Dichloroethene
Aqueous	EPA 8260C	GC-MS-SIM	1,2-Dichlorobenzene
Aqueous	EPA 8260C	GC-MS-SIM	1,2-Dichloroethane
Aqueous	EPA 8260C	GC-MS-SIM	1,4-Dioxane
Aqueous	EPA 8260C	GC-MS-SIM	Carbon tetrachloride
Aqueous	EPA 8260C	GC-MS-SIM	Dichloromethane
Aqueous	EPA 8260C	GC-MS-SIM	Ethylbenzene
Aqueous	EPA 8260C	GC-MS-SIM	m- + p-Xylene
Aqueous	EPA 8260C	GC-MS-SIM	o-Xylene
Aqueous	EPA 8260C	GC-MS-SIM	Tetrachloroethene
Aqueous	EPA 8260C	GC-MS-SIM	Trichloroethene
Aqueous	EPA 8260C	GC-MS-SIM	Vinyl chloride
Aqueous	EPA 8260C	GC-MS-SIM	Xylenes, total
Aqueous	EPA 8270D	GC-MS-SIM	1,4-Dioxane
Aqueous	EPA 8310	HPLC-UV/FLUOR	Acenaphthene
Aqueous	EPA 8310	HPLC-UV/FLUOR	Acenaphthylene
Aqueous	EPA 8310	HPLC-UV/FLUOR	Anthracene

Certificate of Accreditation: Supplement

ISO/IEC 17025:2005 and DoD-ELAP

ALS Environmental-Rochester

1565 Jefferson Road, Building 300, Suite 360, Rochester, NY 14623
Lisa Reyes Phone: 585-288-5380

Accreditation is granted to the facility to perform the following testing:

Matrix	Standard/Method	Technology	Analyte
Aqueous	EPA 8310	HPLC-UV/FLUOR	Benzo(a)antracene
Aqueous	EPA 8310	HPLC-UV/FLUOR	Benzo(a)pyrene
Aqueous	EPA 8310	HPLC-UV/FLUOR	Benzo(b)fluoranthene
Aqueous	EPA 8310	HPLC-UV/FLUOR	Benzo(g,h,i)perylene
Aqueous	EPA 8310	HPLC-UV/FLUOR	Benzo(k)fluoranthene
Aqueous	EPA 8310	HPLC-UV/FLUOR	Chrysene
Aqueous	EPA 8310	HPLC-UV/FLUOR	Dibenzo(a,h)anthracene
Aqueous	EPA 8310	HPLC-UV/FLUOR	Fluoranthene
Aqueous	EPA 8310	HPLC-UV/FLUOR	Fluorene
Aqueous	EPA 8310	HPLC-UV/FLUOR	Indeno(1,2,3-cd)pyrene
Aqueous	EPA 8310	HPLC-UV/FLUOR	Naphthalene
Aqueous	EPA 8310	HPLC-UV/FLUOR	Phenanthrene
Aqueous	EPA 8310	HPLC-UV/FLUOR	Pyrene
Aqueous	EPA 9040B, C	POT	pH
Aqueous	EPA 9060, A	UV-VIS	Total organic carbon
Aqueous	EPA 9066	UV-VIS	Phenolics, total
Aqueous	MA VPH	GC	Aliphatics and Aromatics
Aqueous	RSK-175	GC-FID	Ethane
Aqueous	RSK-175	GC-FID	Ethylene
Aqueous	RSK-175	GC-FID	Methane
Aqueous	RSK-175	GC-FID	Propane
Aqueous	RSK-175	GC-FID	Acetylene
Aqueous	SM 2320B	Titration	Alkalinity, total, carbonate, and bicarbonate
Aqueous	SM 2340C	Titration	Hardness, total
Solids	(CAS SOP) GEN-351.2	UV-VIS	Nitrogen, total Kjeldahl
Solids	(CAS SOP) GEN-420.4/9066	UV-VIS	Phenolics, total
Solids	EPA Lloyd Kahn	UV-VIS	Total organic carbon
Solids	EPA 300.0	IC	Chloride
Solids	EPA 300.0	IC	Fluoride
Solids	EPA 300.0	IC	Nitrate
Solids	EPA 300.0	IC	Sulfate
Solids	EPA 350.1 MOD	Colorimetric	Ammonia
Solids	EPA 7471B	CVAA	Mercury
Solids	EPA 8330A	HPLC-UV	1,3,5-Trinitrobenzene
Solids	EPA 8330A	HPLC-UV	1,3-Dinitrobenzene
Solids	EPA 8330A	HPLC-UV	2,4,6-Trinitrotoluene

Certificate of Accreditation: Supplement

ISO/IEC 17025:2005 and DoD-ELAP

ALS Environmental-Rochester

1565 Jefferson Road, Building 300, Suite 360, Rochester, NY 14623
Lisa Reyes Phone: 585-288-5380

Accreditation is granted to the facility to perform the following testing:

Matrix	Standard/Method	Technology	Analyte
Solids	EPA 8330A	HPLC-UV	2,4-Dinitrotoluene
Solids	EPA 8330A	HPLC-UV	2,6-Dinitrotoluene
Solids	EPA 8330A	HPLC-UV	2-Amino-4,6-dinitrotoluene
Solids	EPA 8330A	HPLC-UV	2-Nitrotoluene
Solids	EPA 8330A	HPLC-UV	3-Nitrotoluene
Solids	EPA 8330A	HPLC-UV	4-Amino-2,6-dinitrotoluene
Solids	EPA 8330A	HPLC-UV	4-Nitrotoluene
Solids	EPA 8330A	HPLC-UV	HMX
Solids	EPA 8330A	HPLC-UV	Nitrobenzene
Solids	EPA 8330A	HPLC-UV	RDX
Solids	EPA 8330A	HPLC-UV	Tetryl
Solids	EPA 9045C, D	POT	pH
Solids	SM 5220B	Titration	Chemical oxygen demand
Aqueous/Solids	EPA 1010A	Pensky Martin	Ignitability
Aqueous/Solids	EPA 353.2	UV-VIS	Nitrate/nitrite as N
Aqueous/Solids	EPA 6010C	ICP-AES	Aluminum
Aqueous/Solids	EPA 6010C	ICP-AES	Antimony
Aqueous/Solids	EPA 6010C	ICP-AES	Arsenic
Aqueous/Solids	EPA 6010C	ICP-AES	Barium
Aqueous/Solids	EPA 6010C	ICP-AES	Beryllium
Aqueous/Solids	EPA 6010C	ICP-AES	Boron
Aqueous/Solids	EPA 6010C	ICP-AES	Cadmium
Aqueous/Solids	EPA 6010C	ICP-AES	Calcium
Aqueous/Solids	EPA 6010C	ICP-AES	Chromium
Aqueous/Solids	EPA 6010C	ICP-AES	Cobalt
Aqueous/Solids	EPA 6010C	ICP-AES	Copper
Aqueous/Solids	EPA 6010C	ICP-AES	Iron
Aqueous/Solids	EPA 6010C	ICP-AES	Lead
Aqueous/Solids	EPA 6010C	ICP-AES	Magnesium
Aqueous/Solids	EPA 6010C	ICP-AES	Manganese
Aqueous/Solids	EPA 6010C	ICP-AES	Nickel
Aqueous/Solids	EPA 6010C	ICP-AES	Potassium
Aqueous/Solids	EPA 6010C	ICP-AES	Selenium

Certificate of Accreditation: Supplement

ISO/IEC 17025:2005 and DoD-ELAP

ALS Environmental-Rochester

1565 Jefferson Road, Building 300, Suite 360, Rochester, NY 14623
Lisa Reyes Phone: 585-288-5380

Accreditation is granted to the facility to perform the following testing:

Matrix	Standard/Method	Technology	Analyte
Aqueous/Solids	EPA 6010C	ICP-AES	Silver
Aqueous/Solids	EPA 6010C	ICP-AES	Sodium
Aqueous/Solids	EPA 6010C	ICP-AES	Thallium
Aqueous/Solids	EPA 6010C	ICP-AES	Tin
Aqueous/Solids	EPA 6010C	ICP-AES	Vanadium
Aqueous/Solids	EPA 6010C	ICP-AES	Zinc
Aqueous/Solids	EPA 6020A	ICP-MS	Arsenic
Aqueous/Solids	EPA 6020A	ICP-MS	Antimony
Aqueous/Solids	EPA 6020A	ICP-MS	Barium
Aqueous/Solids	EPA 6020A	ICP-MS	Beryllium
Aqueous/Solids	EPA 6020A	ICP-MS	Cadmium
Aqueous/Solids	EPA 6020A	ICP-MS	Chromium
Aqueous/Solids	EPA 6020A	ICP-MS	Cobalt
Aqueous/Solids	EPA 6020A	ICP-MS	Copper
Aqueous/Solids	EPA 6020A	ICP-MS	Lead
Aqueous/Solids	EPA 6020A	ICP-MS	Manganese
Aqueous/Solids	EPA 6020A	ICP-MS	Nickel
Aqueous/Solids	EPA 6020A	ICP-MS	Selenium
Aqueous/Solids	EPA 6020A	ICP-MS	Silver
Aqueous/Solids	EPA 6020A	ICP-MS	Thallium
Aqueous/Solids	EPA 6020A	ICP-MS	Vanadium
Aqueous/Solids	EPA 6020A	ICP-MS	Zinc
Aqueous/Solids	EPA 680	GC-MS	Monochlorobiphenyls, Total
Aqueous/Solids	EPA 680	GC-MS	Dichlorobiphenyls, Total
Aqueous/Solids	EPA 680	GC-MS	Trichlorobiphenyls, Total
Aqueous/Solids	EPA 680	GC-MS	Tetrachlorobiphenyls, Total
Aqueous/Solids	EPA 680	GC-MS	Pentachlorobiphenyls, Total
Aqueous/Solids	EPA 680	GC-MS	Hexachlorobiphenyls, Total
Aqueous/Solids	EPA 680	GC-MS	Heptachlorobiphenyls, Total
Aqueous/Solids	EPA 680	GC-MS	Octachlorobiphenyls, Total
Aqueous/Solids	EPA 680	GC-MS	Nonachlorobiphenyls, Total
Aqueous/Solids	EPA 680	GC-MS	Decachlorobiphenyls, Total
Aqueous/Solids	EPA 6850	HPLC-MS	Perchlorate

Certificate of Accreditation: Supplement

ISO/IEC 17025:2005 and DoD-ELAP

ALS Environmental-Rochester

1565 Jefferson Road, Building 300, Suite 360, Rochester, NY 14623
Lisa Reyes Phone: 585-288-5380

Accreditation is granted to the facility to perform the following testing:

Matrix	Standard/Method	Technology	Analyte
Aqueous/Solids	EPA 7196A	UV-VIS	Chromium, hexavalent
Aqueous/Solids	EPA 7199	IC-UV	Chromium, hexavalent
Aqueous/Solids	EPA 8015C	GC-FID	Gasoline range organics
Aqueous/Solids	EPA 8015C	GC-FID	Diesel range organics
Aqueous/Solids	EPA 8081B	GC-ECD	4,4'-DDD
Aqueous/Solids	EPA 8081B	GC-ECD	4,4'-DDE
Aqueous/Solids	EPA 8081B	GC-ECD	4,4'-DDT
Aqueous/Solids	EPA 8081B	GC-ECD	Aldrin
Aqueous/Solids	EPA 8081B	GC-ECD	α-BHC
Aqueous/Solids	EPA 8081B	GC-ECD	Alpha-chlordane
Aqueous/Solids	EPA 8081B	GC-ECD	β-BHC
Aqueous/Solids	EPA 8081B	GC-ECD	Chlordane, technical
Aqueous/Solids	EPA 8081B	GC-ECD	δ-BHC
Aqueous/Solids	EPA 8081B	GC-ECD	Dieldrin
Aqueous/Solids	EPA 8081B	GC-ECD	Endosulfan I
Aqueous/Solids	EPA 8081B	GC-ECD	Endosulfan II
Aqueous/Solids	EPA 8081B	GC-ECD	Endosulfan sulfate
Aqueous/Solids	EPA 8081B	GC-ECD	Endrin
Aqueous/Solids	EPA 8081B	GC-ECD	Endrin aldehyde
Aqueous/Solids	EPA 8081B	GC-ECD	Endrin ketone
Aqueous/Solids	EPA 8081B	GC-ECD	γ-BHC (Lindane)
Aqueous/Solids	EPA 8081B	GC-ECD	γ-Chlordane
Aqueous/Solids	EPA 8081B	GC-ECD	Heptachlor
Aqueous/Solids	EPA 8081B	GC-ECD	Heptachlor epoxide
Aqueous/Solids	EPA 8081B	GC-ECD	Hexachlorobenzene
Aqueous/Solids	EPA 8081B	GC-ECD	Methoxychlor
Aqueous/Solids	EPA 8081B	GC-ECD	Toxaphene
Aqueous/Solids	EPA 8082A	GC-ECD	PCB 1016
Aqueous/Solids	EPA 8082A	GC-ECD	PCB 1221
Aqueous/Solids	EPA 8082A	GC-ECD	PCB 1232
Aqueous/Solids	EPA 8082A	GC-ECD	PCB 1242
Aqueous/Solids	EPA 8082A	GC-ECD	PCB 1248
Aqueous/Solids	EPA 8082A	GC-ECD	PCB 1254

Certificate of Accreditation: Supplement

ISO/IEC 17025:2005 and DoD-ELAP

ALS Environmental-Rochester

1565 Jefferson Road, Building 300, Suite 360, Rochester, NY 14623
Lisa Reyes Phone: 585-288-5380

Accreditation is granted to the facility to perform the following testing:

Matrix	Standard/Method	Technology	Analyte
Aqueous/Solids	EPA 8082A	GC-ECD	PCB 1260
Aqueous/Solids	EPA 8082A	GC-ECD	PCB 1268
Aqueous/Solids	EPA 8151A	GC-ECD	2,4-D
Aqueous/Solids	EPA 8151A	GC-ECD	Dicamba
Aqueous/Solids	EPA 8151A	GC-ECD	2,4,5-T
Aqueous/Solids	EPA 8151A	GC-ECD	2,4,5-TP
Aqueous/Solids	EPA 8151A	GC-ECD	Pentachlorophenol (PCP)
Aqueous/Solids	EPA 8260C	GC-MS	1,1,1,2-Tetrachloroethane
Aqueous/Solids	EPA 8260C	GC-MS	1,1,1-Trichloroethane
Aqueous/Solids	EPA 8260C	GC-MS	1,1,2,2-Tetrachloroethane
Aqueous/Solids	EPA 8260C	GC-MS	1,1,2-Trichloro-1,2,2-trifluoroethane (Freon 113)
Aqueous/Solids	EPA 8260C	GC-MS	1,1,2-Trichloroethane
Aqueous/Solids	EPA 8260C	GC-MS	1,1-Dichloroethane
Aqueous/Solids	EPA 8260C	GC-MS	1,1-Dichloroethene
Aqueous/Solids	EPA 8260C	GC-MS	1,1-Dichloropropene
Aqueous/Solids	EPA 8260C	GC-MS	1,2,3-Trichlorobenzene
Aqueous/Solids	EPA 8260C	GC-MS	1,2,3-Trichloropropane
Aqueous/Solids	EPA 8260C	GC-MS	1,2,4-Trichlorobenzene
Aqueous/Solids	EPA 8260C	GC-MS	1,2,4-Trimethylbenzene
Aqueous/Solids	EPA 8260C	GC-MS	1,2-Dibromo-3-chloropropane
Aqueous/Solids	EPA 8260C	GC-MS	1,2-Dibromoethane
Aqueous/Solids	EPA 8260C	GC-MS	1,2-Dichloro-1,1,2,2-tetrafluoroethane (Freon-114)
Aqueous/Solids	EPA 8260C	GC-MS	1,2-Dichloro-1,1,2-trifluoroethane (Freon 123a)
Aqueous/Solids	EPA 8260C	GC-MS	1,2-Dichlorobenzene
Aqueous/Solids	EPA 8260C	GC-MS	1,2-Dichloroethane
Aqueous/Solids	EPA 8260C	GC-MS	1,2-Dichloroethene, total
Aqueous/Solids	EPA 8260C	GC-MS	1,2-Dichloropropane
Aqueous/Solids	EPA 8260C	GC-MS	1,3,5-Trimethylbenzene
Aqueous/Solids	EPA 8260C	GC-MS	1,3-Dichlorobenzene
Aqueous/Solids	EPA 8260C	GC-MS	1,3-Dichloropropane
Aqueous/Solids	EPA 8260C	GC-MS	1,4-Dichlorobenzene
Aqueous/Solids	EPA 8260C	GC-MS	1,4-Dioxane

Certificate of Accreditation: Supplement

ISO/IEC 17025:2005 and DoD-ELAP

ALS Environmental-Rochester

1565 Jefferson Road, Building 300, Suite 360, Rochester, NY 14623
Lisa Reyes Phone: 585-288-5380

Accreditation is granted to the facility to perform the following testing:

Matrix	Standard/Method	Technology	Analyte
Aqueous/Solids	EPA 8260C	GC-MS	2,2-Dichloro-1,1,1-trifluoroethane (Freon 123)
Aqueous/Solids	EPA 8260C	GC-MS	2,2-Dichloropropane
Aqueous/Solids	EPA 8260C	GC-MS	2-Butanone (MEK)
Aqueous/Solids	EPA 8260C	GC-MS	2-Chloro-1,3-butadiene
Aqueous/Solids	EPA 8260C	GC-MS	2-Chloroethylvinyl ether
Aqueous/Solids	EPA 8260C	GC-MS	2-Chlorotoluene
Aqueous/Solids	EPA 8260C	GC-MS	2-Hexanone
Aqueous/Solids	EPA 8260C	GC-MS	2-Methyl-1-propanol (Isobutlyl alcohol)
Aqueous/Solids	EPA 8260C	GC-MS	2-Methyl-2-propanol (Tertbutyl alcohol)
Aqueous/Solids	EPA 8260C	GC-MS	2-Nitropropane
Aqueous/Solids	EPA 8260C	GC-MS	2-Propanol
Aqueous/Solids	EPA 8260C	GC-MS	3-Chloro-1-propene (Allyl chloride)
Aqueous/Solids	EPA 8260C	GC-MS	4-Chlorotoluene
Aqueous/Solids	EPA 8260C	GC-MS	4-Ethyltoluene
Aqueous/Solids	EPA 8260C	GC-MS	4-Isopropyltoluene
Aqueous/Solids	EPA 8260C	GC-MS	4-Methyl-2-pentanone (MIBK)
Aqueous/Solids	EPA 8260C	GC-MS	Acetone
Aqueous/Solids	EPA 8260C	GC-MS	Acetonitrile
Aqueous/Solids	EPA 8260C	GC-MS	Acrolein
Aqueous/Solids	EPA 8260C	GC-MS	Acrylonitrile
Aqueous/Solids	EPA 8260C	GC-MS	Benzene
Aqueous/Solids	EPA 8260C	GC-MS	Benzyl chloride
Aqueous/Solids	EPA 8260C	GC-MS	Bromobenzene
Aqueous/Solids	EPA 8260C	GC-MS	Bromochloromethane
Aqueous/Solids	EPA 8260C	GC-MS	Bromodichloromethane
Aqueous/Solids	EPA 8260C	GC-MS	Bromoform
Aqueous/Solids	EPA 8260C	GC-MS	Bromomethane
Aqueous/Solids	EPA 8260C	GC-MS	Carbon disulfide
Aqueous/Solids	EPA 8260C	GC-MS	Carbon tetrachloride
Aqueous/Solids	EPA 8260C	GC-MS	Chlorobenzene
Aqueous/Solids	EPA 8260C	GC-MS	Chloroethane
Aqueous/Solids	EPA 8260C	GC-MS	Chloroform
Aqueous/Solids	EPA 8260C	GC-MS	Chloromethane

Certificate of Accreditation: Supplement

ISO/IEC 17025:2005 and DoD-ELAP

ALS Environmental-Rochester
1565 Jefferson Road, Building 300, Suite 360, Rochester, NY 14623
Lisa Reyes Phone: 585-288-5380

Accreditation is granted to the facility to perform the following testing:

Matrix	Standard/Method	Technology	Analyte
Aqueous/Solids	EPA 8260C	GC-MS	cis-1,2-Dichloroethene
Aqueous/Solids	EPA 8260C	GC-MS	cis-1,3-Dichloropropene
Aqueous/Solids	EPA 8260C	GC-MS	Cyclohexane
Aqueous/Solids	EPA 8260C	GC-MS	Cyclohexanone
Aqueous/Solids	EPA 8260C	GC-MS	Dibromochloromethane
Aqueous/Solids	EPA 8260C	GC-MS	Dibromomethane
Aqueous/Solids	EPA 8260C	GC-MS	Dichlorodifluoromethane (Freon 12)
Aqueous/Solids	EPA 8260C	GC-MS	Dichlorofluoromethane (Freon 21)
Aqueous/Solids	EPA 8260C	GC-MS	Dichloromethane
Aqueous/Solids	EPA 8260C	GC-MS	Diethyl ether
Aqueous/Solids	EPA 8260C	GC-MS	Diisopropyl ether
Aqueous/Solids	EPA 8260C	GC-MS	Ethyl methacrylate
Aqueous/Solids	EPA 8260C	GC-MS	Ethyl tert-butyl ether
Aqueous/Solids	EPA 8260C	GC-MS	Ethylbenzene
Aqueous/Solids	EPA 8260C	GC-MS	Hexachlorobutadiene
Aqueous/Solids	EPA 8260C	GC-MS	Iodomethane
Aqueous/Solids	EPA 8260C	GC-MS	Isopropylbenzene
Aqueous/Solids	EPA 8260C	GC-MS	m- + p-Xylene
Aqueous/Solids	EPA 8260C	GC-MS	Methacrylonitrile
Aqueous/Solids	EPA 8260C	GC-MS	Methyl acetate
Aqueous/Solids	EPA 8260C	GC-MS	Methyl methacrylate
Aqueous/Solids	EPA 8260C	GC-MS	Methylcyclohexane
Aqueous/Solids	EPA 8260C	GC-MS	Methyl-tert-butyl ether (MTBE)
Aqueous/Solids	EPA 8260C	GC-MS	Napthalene
Aqueous/Solids	EPA 8260C	GC-MS	N-butylacetate
Aqueous/Solids	EPA 8260C	GC-MS	N-butylbenzene
Aqueous/Solids	EPA 8260C	GC-MS	N-heptane
Aqueous/Solids	EPA 8260C	GC-MS	N-propylbenzene
Aqueous/Solids	EPA 8260C	GC-MS	o-Xylene
Aqueous/Solids	EPA 8260C	GC-MS	Propionitrile
Aqueous/Solids	EPA 8260C	GC-MS	sec-butylbenzene
Aqueous/Solids	EPA 8260C	GC-MS	Styrene
Aqueous/Solids	EPA 8260C	GC-MS	tert-amyl methyl ether

Certificate of Accreditation: Supplement

ISO/IEC 17025:2005 and DoD-ELAP

ALS Environmental-Rochester

1565 Jefferson Road, Building 300, Suite 360, Rochester, NY 14623
Lisa Reyes Phone: 585-288-5380

Accreditation is granted to the facility to perform the following testing:

Matrix	Standard/Method	Technology	Analyte
Aqueous/Solids	EPA 8260C	GC-MS	tert-butylbenzene
Aqueous/Solids	EPA 8260C	GC-MS	Tetra hydrofuran
Aqueous/Solids	EPA 8260C	GC-MS	Tetrachloroethene
Aqueous/Solids	EPA 8260C	GC-MS	Toluene
Aqueous/Solids	EPA 8260C	GC-MS	trans-1,2-Dichloroethene
Aqueous/Solids	EPA 8260C	GC-MS	trans-1,3-Dichloropropene
Aqueous/Solids	EPA 8260C	GC-MS	trans-1,4-Dichloro-2-butene
Aqueous/Solids	EPA 8260C	GC-MS	Trichloroethene
Aqueous/Solids	EPA 8260C	GC-MS	Trichlorofluoromethane (Freon 11)
Aqueous/Solids	EPA 8260C	GC-MS	Vinyl acetate
Aqueous/Solids	EPA 8260C	GC-MS	Vinyl chloride
Aqueous/Solids	EPA 8260C	GC-MS	Xylenes, total
Aqueous/Solids	EPA 8270D	GC-MS	1,2,4,5-Tetrachlorobenzene
Aqueous/Solids	EPA 8270D	GC-MS	1,2,4-Trichlorobenzene
Aqueous/Solids	EPA 8270D	GC-MS	1,2-Dichlorobenzene
Aqueous/Solids	EPA 8270D	GC-MS	1,2-Diphenylhydrazine
Aqueous/Solids	EPA 8270D	GC-MS	1,3,5-Trinitrobenzene
Aqueous/Solids	EPA 8270D	GC-MS	1,3-Dichlorobenzene
Aqueous/Solids	EPA 8270D	GC-MS	1,3-Dinitrobenzene
Aqueous/Solids	EPA 8270D	GC-MS	1,4-Dichlorobenzene
Aqueous/Solids	EPA 8270D	GC-MS	1,4-Dioxane
Aqueous/Solids	EPA 8270D	GC-MS	1,4-Naphthoquinone
Aqueous/Solids	EPA 8270D	GC-MS	1-Methyl-2-pyrrolidinone
Aqueous/Solids	EPA 8270D	GC-MS	1-Methylnaphthalene
Aqueous/Solids	EPA 8270D	GC-MS	1-Naphthylamine
Aqueous/Solids	EPA 8270D	GC-MS	2,3,4,6-Tetrachlorophenol
Aqueous/Solids	EPA 8270D	GC-MS	2,4,5-Trichlorophenol
Aqueous/Solids	EPA 8270D	GC-MS	2,4,6-Trichlorophenol
Aqueous/Solids	EPA 8270D	GC-MS	2,4-Dichlorophenol
Aqueous/Solids	EPA 8270D	GC-MS	2,4-Dimethylphenol
Aqueous/Solids	EPA 8270D	GC-MS	2,4-Dinitrophenol
Aqueous/Solids	EPA 8270D	GC-MS	2,4-Dinitrotoluene
Aqueous/Solids	EPA 8270D	GC-MS	2,6-Dichlorophenol

Certificate of Accreditation: Supplement

ISO/IEC 17025:2005 and DoD-ELAP

ALS Environmental-Rochester

1565 Jefferson Road, Building 300, Suite 360, Rochester, NY 14623
Lisa Reyes Phone: 585-288-5380

Accreditation is granted to the facility to perform the following testing:

Matrix	Standard/Method	Technology	Analyte
Aqueous/Solids	EPA 8270D	GC-MS	2,6-Dinitrotoluene
Aqueous/Solids	EPA 8270D	GC-MS	2-Acetylaminofluorene
Aqueous/Solids	EPA 8270D	GC-MS	2-Chloronaphthalene
Aqueous/Solids	EPA 8270D	GC-MS	2-Chlorophenol
Aqueous/Solids	EPA 8270D	GC-MS	2-Methyl-5-nitroaniline (5-Nitro-o-toluidine)
Aqueous/Solids	EPA 8270D	GC-MS	2-Methylnaphthalene
Aqueous/Solids	EPA 8270D	GC-MS	2-Methylphenol
Aqueous/Solids	EPA 8270D	GC-MS	2-Naphthylamine
Aqueous/Solids	EPA 8270D	GC-MS	2-Nitroaniline
Aqueous/Solids	EPA 8270D	GC-MS	2-Nitrophenol
Aqueous/Solids	EPA 8270D	GC-MS	2-Picoline
Aqueous/Solids	EPA 8270D	GC-MS	3,3'-Dichlorobenzidine
Aqueous/Solids	EPA 8270D	GC-MS	3,3'-Dimethylbenzidine
Aqueous/Solids	EPA 8270D	GC-MS	3+4-Methylphenol
Aqueous/Solids	EPA 8270D	GC-MS	3-Methylcholanthrene
Aqueous/Solids	EPA 8270D	GC-MS	3-Nitroaniline
Aqueous/Solids	EPA 8270D	GC-MS	4,6-Dinitro-2-methylphenol
Aqueous/Solids	EPA 8270D	GC-MS	4-Aminobiphenyl
Aqueous/Solids	EPA 8270D	GC-MS	4-Bromophenyl-phenylether
Aqueous/Solids	EPA 8270D	GC-MS	4-Chloro-3-methylphenol
Aqueous/Solids	EPA 8270D	GC-MS	4-Chloroaniline
Aqueous/Solids	EPA 8270D	GC-MS	4-Chlorophenyl-phenylether
Aqueous/Solids	EPA 8270D	GC-MS	4-Nitroaniline
Aqueous/Solids	EPA 8270D	GC-MS	4-Nitrophenol
Aqueous/Solids	EPA 8270D	GC-MS	4-Nitroquinoline-1-oxide
Aqueous/Solids	EPA 8270D	GC-MS	7,12-Dimethylbenz(a)anthracene
Aqueous/Solids	EPA 8270D	GC-MS	α,α-Dimethylphenethylamine
Aqueous/Solids	EPA 8270D	GC-MS	Acenaphthene
Aqueous/Solids	EPA 8270D	GC-MS	Acenaphthylene
Aqueous/Solids	EPA 8270D	GC-MS	Acetophenone
Aqueous/Solids	EPA 8270D	GC-MS	Aniline
Aqueous/Solids	EPA 8270D	GC-MS	Anthracene
Aqueous/Solids	EPA 8270D	GC-MS	Aramite

Certificate of Accreditation: Supplement

ISO/IEC 17025:2005 and DoD-ELAP

ALS Environmental-Rochester

1565 Jefferson Road, Building 300, Suite 360, Rochester, NY 14623
Lisa Reyes Phone: 585-288-5380

Accreditation is granted to the facility to perform the following testing:

Matrix	Standard/Method	Technology	Analyte
Aqueous/Solids	EPA 8270D	GC-MS	Atrazine
Aqueous/Solids	EPA 8270D	GC-MS	Benzaldehyde
Aqueous/Solids	EPA 8270D	GC-MS	Benzidine
Aqueous/Solids	EPA 8270D	GC-MS	Benzo(a)anthracene
Aqueous/Solids	EPA 8270D	GC-MS	Benzo(a)pyrene
Aqueous/Solids	EPA 8270D	GC-MS	Benzo(b)fluoranthene
Aqueous/Solids	EPA 8270D	GC-MS	Benzo(g,h,i)perylene
Aqueous/Solids	EPA 8270D	GC-MS	Benzo(k)fluoranthene
Aqueous/Solids	EPA 8270D	GC-MS	Benzoic acid
Aqueous/Solids	EPA 8270D	GC-MS	Benzyl alcohol
Aqueous/Solids	EPA 8270D	GC-MS	Biphenyl
Aqueous/Solids	EPA 8270D	GC-MS	Bis(1-chloroisopropyl)ether
Aqueous/Solids	EPA 8270D	GC-MS	Bis(-2-chloroethoxy)methane
Aqueous/Solids	EPA 8270D	GC-MS	Bis(2-chloroethyl)ether
Aqueous/Solids	EPA 8270D	GC-MS	Bis(2-ethylhexyl)phthalate
Aqueous/Solids	EPA 8270D	GC-MS	Butyl benzyl phthalate
Aqueous/Solids	EPA 8270D	GC-MS	Caprolactam
Aqueous/Solids	EPA 8270D	GC-MS	Carbazole
Aqueous/Solids	EPA 8270D	GC-MS	Chlorobenzilate
Aqueous/Solids	EPA 8270D	GC-MS	Chrysene
Aqueous/Solids	EPA 8270D	GC-MS	Cyclohexane, isothiocyanato-
Aqueous/Solids	EPA 8270D	GC-MS	Diallate
Aqueous/Solids	EPA 8270D	GC-MS	Dibenzo(a,h)anthracene
Aqueous/Solids	EPA 8270D	GC-MS	Dibenzofuran
Aqueous/Solids	EPA 8270D	GC-MS	Diethylphthalate
Aqueous/Solids	EPA 8270D	GC-MS	Dimethoate
Aqueous/Solids	EPA 8270D	GC-MS	Dimethyl phthalate
Aqueous/Solids	EPA 8270D	GC-MS	Di-n-butylphthalate
Aqueous/Solids	EPA 8270D	GC-MS	Di-n-octyl phthalate
Aqueous/Solids	EPA 8270D	GC-MS	Dinoseb
Aqueous/Solids	EPA 8270D	GC-MS	Diphenylamine
Aqueous/Solids	EPA 8270D	GC-MS	Disulfoton
Aqueous/Solids	EPA 8270D	GC-MS	Ethyl methanesulfonate

Certificate of Accreditation: Supplement

ISO/IEC 17025:2005 and DoD-ELAP

ALS Environmental-Rochester

1565 Jefferson Road, Building 300, Suite 360, Rochester, NY 14623
Lisa Reyes Phone: 585-288-5380

Accreditation is granted to the facility to perform the following testing:

Matrix	Standard/Method	Technology	Analyte
Aqueous/Solids	EPA 8270D	GC-MS	Fluoranthene
Aqueous/Solids	EPA 8270D	GC-MS	Fluorene
Aqueous/Solids	EPA 8270D	GC-MS	Hexachlorobenzene
Aqueous/Solids	EPA 8270D	GC-MS	Hexachlorobutadiene
Aqueous/Solids	EPA 8270D	GC-MS	Hexachlorocyclopentadiene
Aqueous/Solids	EPA 8270D	GC-MS	Hexachloroethane
Aqueous/Solids	EPA 8270D	GC-MS	Hexachlorophene
Aqueous/Solids	EPA 8270D	GC-MS	Hexachloropropene
Aqueous/Solids	EPA 8270D	GC-MS	Indeno(1,2,3-cd)pyrene
Aqueous/Solids	EPA 8270D	GC-MS	Isodrin
Aqueous/Solids	EPA 8270D	GC-MS	Isophorone
Aqueous/Solids	EPA 8270D	GC-MS	Isosafrole
Aqueous/Solids	EPA 8270D	GC-MS	Methapyrilene
Aqueous/Solids	EPA 8270D	GC-MS	Methyl methanesulfonate
Aqueous/Solids	EPA 8270D	GC-MS	Methyl parathion
Aqueous/Solids	EPA 8270D	GC-MS	Naphthalene
Aqueous/Solids	EPA 8270D	GC-MS	Nitrobenzene
Aqueous/Solids	EPA 8270D	GC-MS	N-nitrosodiethylamine
Aqueous/Solids	EPA 8270D	GC-MS	N-nitrosodimethylamine
Aqueous/Solids	EPA 8270D	GC-MS	N-nitrosodi-n-butylamine
Aqueous/Solids	EPA 8270D	GC-MS	N-nitroso-di-n-propylamine
Aqueous/Solids	EPA 8270D	GC-MS	N-nitrosodiphenylamine
Aqueous/Solids	EPA 8270D	GC-MS	N-nitrosomethylethylamine
Aqueous/Solids	EPA 8270D	GC-MS	N-nitrosomorpholine
Aqueous/Solids	EPA 8270D	GC-MS	N-nitrosopiperidine
Aqueous/Solids	EPA 8270D	GC-MS	N-nitrosopyrolidine
Aqueous/Solids	EPA 8270D	GC-MS	Octachlorostyrene
Aqueous/Solids	EPA 8270D	GC-MS	o,o,o-triethyl phosphorothioate
Aqueous/Solids	EPA 8270D	GC-MS	o-toluidine
Aqueous/Solids	EPA 8270D	GC-MS	Parathion (ethyl)
Aqueous/Solids	EPA 8270D	GC-MS	p-dimethylaminoazobenzene
Aqueous/Solids	EPA 8270D	GC-MS	Pentachlorobenzene
Aqueous/Solids	EPA 8270D	GC-MS	Pentachloroethane

Certificate of Accreditation: Supplement

ISO/IEC 17025:2005 and DoD-ELAP

ALS Environmental-Rochester

1565 Jefferson Road, Building 300, Suite 360, Rochester, NY 14623
Lisa Reyes Phone: 585-288-5380

Accreditation is granted to the facility to perform the following testing:

Matrix	Standard/Method	Technology	Analyte
Aqueous/Solids	EPA 8270D	GC-MS	Pentachloronitrobenzene
Aqueous/Solids	EPA 8270D	GC-MS	Pentachlorophenol
Aqueous/Solids	EPA 8270D	GC-MS	Phenacetin
Aqueous/Solids	EPA 8270D	GC-MS	Phenanthrene
Aqueous/Solids	EPA 8270D	GC-MS	Phenol
Aqueous/Solids	EPA 8270D	GC-MS	Phorate
Aqueous/Solids	EPA 8270D	GC-MS	Phthalimide
Aqueous/Solids	EPA 8270D	GC-MS	Pyrene
Aqueous/Solids	EPA 8270D	GC-MS	Pyridine
Aqueous/Solids	EPA 8270D	GC-MS	Safrole
Aqueous/Solids	EPA 8270D	GC-MS	Sulfotepp
Aqueous/Solids	EPA 8270D	GC-MS	Thionazin
Aqueous/Solids	EPA 8270D	GC-MS-LL	1,4-Dioxane
Aqueous/Solids	EPA 8270D	GC-MS-LL	1-Methylnaphthalene
Aqueous/Solids	EPA 8270D	GC-MS-LL	2-Methylnaphthalene
Aqueous/Solids	EPA 8270D	GC-MS-LL	Acenaphthene
Aqueous/Solids	EPA 8270D	GC-MS-LL	Acenaphthylene
Aqueous/Solids	EPA 8270D	GC-MS-LL	Anthracene
Aqueous/Solids	EPA 8270D	GC-MS-LL	Benzo(a)anthracene
Aqueous/Solids	EPA 8270D	GC-MS-LL	Benzo(a)pyrene
Aqueous/Solids	EPA 8270D	GC-MS-LL	Benzo(b)fluoranthene
Aqueous/Solids	EPA 8270D	GC-MS-LL	Benzo(g,h,i)perylene
Aqueous/Solids	EPA 8270D	GC-MS-LL	Benzo(k)fluoranthene
Aqueous/Solids	EPA 8270D	GC-MS-LL	Bis(2-ethylhexyl)phthalate
Aqueous/Solids	EPA 8270D	GC-MS-LL	Butyl benzyl phthalate
Aqueous/Solids	EPA 8270D	GC-MS-LL	Carbazole
Aqueous/Solids	EPA 8270D	GC-MS-LL	Chrysene
Aqueous/Solids	EPA 8270D	GC-MS-LL	Dibenzo(a,h)anthracene
Aqueous/Solids	EPA 8270D	GC-MS-LL	Dibenzofuran
Aqueous/Solids	EPA 8270D	GC-MS-LL	Diethyl phthalate
Aqueous/Solids	EPA 8270D	GC-MS-LL	Dimethyl phthalate
Aqueous/Solids	EPA 8270D	GC-MS-LL	Di-n-butyl phthalate
Aqueous/Solids	EPA 8270D	GC-MS-LL	Di-n-octyl phthalate

Certificate of Accreditation: Supplement

ISO/IEC 17025:2005 and DoD-ELAP

ALS Environmental-Rochester

1565 Jefferson Road, Building 300, Suite 360, Rochester, NY 14623
Lisa Reyes Phone: 585-288-5380

Accreditation is granted to the facility to perform the following testing:

Matrix	Standard/Method	Technology	Analyte
Aqueous/Solids	EPA 8270D	GC-MS-LL	Fluoranthene
Aqueous/Solids	EPA 8270D	GC-MS-LL	Fluorene
Aqueous/Solids	EPA 8270D	GC-MS-LL	Hexachlorobenzene
Aqueous/Solids	EPA 8270D	GC-MS-LL	Indeno(1,2,3-cd)pyrene
Aqueous/Solids	EPA 8270D	GC-MS-LL	Naphthalene
Aqueous/Solids	EPA 8270D	GC-MS-LL	Nitrobenzene
Aqueous/Solids	EPA 8270D	GC-MS-LL	Octachlorostyrene
Aqueous/Solids	EPA 8270D	GC-MS-LL	Phenanthrene
Aqueous/Solids	EPA 8270D	GC-MS-LL	Pyrene
Aqueous/Solids	EPA 8270D	GC-MS-LL	Pyridine
Aqueous/Solids	EPA 9012A, B	UV-VIS	Cyanide, total
Aqueous/Solids	EPA 9034	Titration	Sulfide, acid soluble
Aqueous/Solids	EPA 9056A	IC	Bromide
Aqueous/Solids	EPA 9056A	IC	Chloride
Aqueous/Solids	EPA 9056A	IC	Fluoride
Aqueous/Solids	EPA 9056A	IC	Nitrate as Nitrogen
Aqueous/Solids	EPA 9056A	IC	Nitrite as Nitrogen
Aqueous/Solids	EPA 9056A	IC	Sulfate
Aqueous/Solids	GEN-AVS	Titrimetric	Acid Volatile Sulfide
Aqueous/Solids	EPA 8330B	HPLC	1,3,5-Trinitrobenzene
Aqueous/Solids	EPA 8330B	HPLC	1,3-Dinitrobenzene
Aqueous/Solids	EPA 8330B	HPLC	2,4,6-Trinitrotoluene (TNT)
Aqueous/Solids	EPA 8330B	HPLC	2,4-Dinitrotoluene
Aqueous/Solids	EPA 8330B	HPLC	2,6-Dinitrotoluene
Aqueous/Solids	EPA 8330B	HPLC	2-Amino 4,6-Dinitrotoluene
Aqueous/Solids	EPA 8330B	HPLC	2-Nitrotoluene
Aqueous/Solids	EPA 8330B	HPLC	3,5-Dinitroaniline
Aqueous/Solids	EPA 8330B	HPLC	3-Nitrotoluene
Aqueous/Solids	EPA 8330B	HPLC	4-Amino 2,6-Dinitrotoluene
Aqueous/Solids	EPA 8330B	HPLC	4-Nitrotoluene
Aqueous/Solids	EPA 8330B	HPLC	Hexahydro 1,3,5-Trinitro 1,3,5-Triazine
Aqueous/Solids	EPA 8330B	HPLC	Methyl 2,4,6 Trinitrophenylnitramine
Aqueous/Solids	EPA 8330B	HPLC	Nitrobenzene
Aqueous/Solids	EPA 8330B	HPLC	Nitroglycerin

Certificate of Accreditation: Supplement

ISO/IEC 17025:2005 and DoD-ELAP

ALS Environmental-Rochester

1565 Jefferson Road, Building 300, Suite 360, Rochester, NY 14623
Lisa Reyes Phone: 585-288-5380

Accreditation is granted to the facility to perform the following testing:

Matrix	Standard/Method	Technology	Analyte
Aqueous/Solids	EPA 8330B	HPLC	Octahydro 1.3.5.7 Tetranitro 1,3,5,7 Tetraz
Aqueous/Solids	EPA 8330B	HPLC	Pentaerythritol Tetranitrate (PETN)
Aqueous/Solids	HPLC-METACID	HPLC	Acetic Acid
Aqueous/Solids	HPLC-METACID	HPLC	Butanoic Acid (Butyric Acid)
Aqueous/Solids	HPLC-METACID	HPLC	Lactic Acid
Aqueous/Solids	HPLC-METACID	HPLC	Propionic Acid
Aqueous/Solids	HPLC-METACID	HPLC	Pyruvic Acid

Matrix	Standard/Method	Technology	Analyte
Aqueous	(CAS SOP)	SPE Extraction	1,4-Dioxane
Aqueous	EPA 3010A	Acid Digestion	Metals prep
Aqueous	EPA 3510C	SF Extraction	Semivolatiles, pesticides, PCBs, DRO
Aqueous	EPA 5030B	P&T	Volatiles
Solids	EPA 3050B	Acid Digestion	Metals prep
Solids	EPA 3060A	Digestion	Hexavalent chromium digestion
Solids	EPA 3541	SOX Extraction	Semivolatiles, pesticides, PCBs, DRO
Solids	EPA 5035	P&T closed	Volatiles
Aqueous/Solids	EPA 1311	TCLP	Physical Extraction
Aqueous/Solids	EPA 1312	SPLP	Physical Extraction
Aqueous/Solids	EPA 3620B	Florisil Cleanup	Semivolatiles, pesticides, PCBs
Aqueous/Solids	EPA 3660B	Sulfur Cleanup	Semivolatiles, pesticides, PCBs
Aqueous/Solids	EPA 3665A	Sulfuric Acid Cleanup	PCBs
Aqueous/Solids	EPA 9012A, B	Distillation	Cyanide
Aqueous/Solids	EPA 9030B	Distillation	Sulfide, acid soluble

Perry Johnson Laboratory Accreditation, Inc.

April 7, 2012

Ms. Lisa Reyes
ALS Environmental-Rochester
1565 Jefferson Road, Building 300
Suite 360
Rochester, NY 14623

Dear Ms. Reyes

This letter is to confirm that you have successfully completed your reaccreditation assessment. A certificate has now been granted and posted on our website. As you are aware, PJLA will no longer be issuing expiration dates on our certificates. Your certificate # **L12-48 R1** will remain valid as long as you continue to maintain your annual assessments and reaccreditation assessments as stated in your customer agreement with PJLA. At this time, we have confirmed that your annual assessments will be conducted during the month of **October** each calendar year. This will include an interim surveillance assessment and a full system reassessment to be completed by **October 2013**. Once your reassessment is conducted and approved by our accreditation committee a revised status letter will be provided to you. Please allow PJLA at least 120 days from your assessment due date to issue this letter.

Please feel free to release this letter to any interested parties as confirmation of your certificate validity. Also, please remind them that your certificate is posted on our website at all times. Any changes in regards to your accreditation status will be reflected on our website.

We would like to thank you for your patronage over the past years and look forward to continuously serving your accreditation needs in the future. If we can assist you any further, please feel free to contact us at any time.

Sincerely,

Tracy Szerszen
President/Operations Manager

755 W. Big Beaver Rd. · Suite 1325 · Troy, MI 48084 · Phone: 1-877-369-LABS or 248-519-2603 · Fax: 248-213-0737

COMMONWEALTH of VIRGINIA

Department of General Services

Division of Consolidated Laboratory Services

600 North 5th Street
Richmond, Virginia 23219-3691
(804) 648-4480
FAX (804) 692-0416

01/31/2014

Michael Perry
ALS ENVIRONMENTAL - ROCHESTER
1565 Jefferson Road, Building 300, Suite 300
Rochester NY 14623

VELAP ID: 460167

Dear Michael Perry:

The Virginia Environmental Laboratory Accreditation Program (VELAP) has updated the laboratory's scope of certification to reflect methodology compliant with the July 1, 2012 40 CFR 136 Methods Update Rule (MUR), as incorporated into Virginia Pollutant Discharge Elimination System (VPDES) regulation at 9VAC25-31, for the enclosed certificate.

The enclosed certificate reflects removal of any unapproved method and replacement with the most recent version of the same method. Per the MUR, many previously approved methods are no longer valid for the purpose of Clean Water Act (CWA) compliance or for the purpose of meeting VPDES requirements.

PLEASE REVIEW the revised enclosed certificate and contact the VELAP office IMMEDIATELY at Lab_Cert@dgs.virginia.gov if the certificate does not represent the analytical methods and revisions to be used by the laboratory on and after February 1, 2014.

Sincerely yours,

Cathy Westerman
Manager, Virginia Environmental Laboratory Accreditation Program

Enclosures

COMMONWEALTH OF VIRGINIA
DEPARTMENT OF GENERAL SERVICES
DIVISION OF CONSOLIDATED LABORATORY SERVICES

Certifies that

VA Laboratory ID#: 460167
ALS ENVIRONMENTAL - ROCHESTER

1565 JEFFERSON ROAD, BUILDING 300, SUITE 300
ROCHESTER, NY 14623

Owner: ALS GROUP USA CORP. DBA ALS ENVIRONMENTAL
Operator: ALS ENVIRONMENTAL - ROCHESTER
Responsible Official: PATRICIA DAVIS

Having met the requirements of 1 VAC 30-46
and the National Environmental Laboratory Accreditation Conference 2003 Standard

is hereby approved as an

Accredited Laboratory

As more fully described in the attached Scope of Accreditation

Effective Date: **January 31, 2014**
Expiration Date: **June 14, 2014**
Certificate # 2749

Thomas L. York, Ph.D., HCLD
DGS Deputy Director for Laboratories

Continued accreditation status depends on successful ongoing participation in the program.
Certificate to be conspicuously displayed at the laboratory.
Not valid unless accompanied by a valid Virginia Environmental Laboratory Accreditation Program (VELAP) Scope of Accreditation.
Customers are urged to verify the laboratory's current accreditation status.

Certificate Not Transferable

Surrender Upon Revocation

Commonwealth of Virginia

Department of General Services
Division of Consolidated Laboratory Services

Scope of Accreditation

VELAP Certificate No.: 2749

ALS ENVIRONMENTAL - ROCHESTER
1565 JEFFERSON ROAD, BUILDING 300, SUITE 300
ROCHESTER, NY 14623

Virginia Laboratory ID: 460167
Effective Date: January 31, 2014
Expiration Date: June 14, 2014

DRINKING WATER

METHOD	ANALYTE	PRIMARY
EPA 180.1 REV 2	TURBIDITY	NY
EPA 200.7 REV 4.4	CADMIUM	NY
EPA 200.7 REV 4.4	COPPER	NY
EPA 200.7 REV 4.4	MANGANESE	NY
EPA 200.7 REV 4.4	SILVER	NY
EPA 200.7 REV 4.4	ZINC	NY
EPA 200.8 REV 5.4	ARSENIC	NY
EPA 200.8 REV 5.4	BERYLLIUM	NY
EPA 200.8 REV 5.4	CHROMIUM	NY
EPA 200.8 REV 5.4	LEAD	NY
EPA 200.8 REV 5.4	NICKEL	NY
EPA 200.8 REV 5.4	SILVER	NY
EPA 200.8 REV 5.4	ZINC	NY
EPA 300.0 REV 2.1	CHLORIDE	NY
EPA 300.0 REV 2.1	NITRATE AS N	NY
EPA 300.0 REV 2.1	SULFATE	NY
EPA 353.2 REV 2	NITRATE AS N	NY
EPA 365.1 REV 2	ORTHOPHOSPHATE AS P	NY
EPA 504.1 REV 1.1	1,2-DIBROMOETHANE (EDB, ETHYLENE DIBROMIDE)	NY
EPA 524.2 REV 4.1	1,1,2-TRICHLOROETHANE	NY
EPA 524.2 REV 4.1	1,2,4-TRICHLOROBENZENE	NY
EPA 524.2 REV 4.1	1,2-DICHLOROETHANE (ETHYLENE DICHLORIDE)	NY
EPA 524.2 REV 4.1	1,4-DICHLOROBENZENE	NY
EPA 524.2 REV 4.1	BROMODICHLOROMETHANE	NY
EPA 524.2 REV 4.1	CARBON TETRACHLORIDE	NY
EPA 524.2 REV 4.1	CHLORODIBROMOMETHANE	NY
EPA 524.2 REV 4.1	CIS-1,2-DICHLOROETHYLENE	NY
EPA 524.2 REV 4.1	METHYLENE CHLORIDE (DICHLOROMETHANE)	NY
EPA 524.2 REV 4.1	TETRACHLOROETHENE (PERCHLOROETHENE)	NY
EPA 524.2 REV 4.1	TRANS-1,2-DICHLOROETHENE	NY
EPA 524.2 REV 4.1	VINYL CHLORIDE	NY
SM 2120 B-2001	COLOR	NY
SM 2540 C-1997	RESIDUE-FILTERABLE (TDS)	NY
SM 5310 C-2000	TOTAL ORGANIC CARBON	NY

METHOD	ANALYTE	PRIMARY
EPA 200.7 REV 4.4	BARIUM	NY
EPA 200.7 REV 4.4	CHROMIUM	NY
EPA 200.7 REV 4.4	IRON	NY
EPA 200.7 REV 4.4	NICKEL	NY
EPA 200.7 REV 4.4	SODIUM	NY
EPA 200.8 REV 5.4	ANTIMONY	NY
EPA 200.8 REV 5.4	BARIUM	NY
EPA 200.8 REV 5.4	CADMIUM	NY
EPA 200.8 REV 5.4	COPPER	NY
EPA 200.8 REV 5.4	MANGANESE	NY
EPA 200.8 REV 5.4	SELENIUM	NY
EPA 200.8 REV 5.4	THALLIUM	NY
EPA 245.1 REV 3	MERCURY	NY
EPA 300.0 REV 2.1	FLUORIDE	NY
EPA 300.0 REV 2.1	NITRITE AS N	NY
EPA 335.4	CYANIDE	NY
EPA 353.2 REV 2	NITRITE AS N	NY
EPA 504.1 REV 1.1	1,2-DIBROMO-3-CHLOROPROPANE (DBCP)	NY
EPA 524.2 REV 4.1	1,1,1-TRICHLOROETHANE	NY
EPA 524.2 REV 4.1	1,1-DICHLOROETHYLENE	NY
EPA 524.2 REV 4.1	1,2-DICHLOROBENZENE	NY
EPA 524.2 REV 4.1	1,2-DICHLOROPROPANE	NY
EPA 524.2 REV 4.1	BENZENE	NY
EPA 524.2 REV 4.1	BROMOFORM	NY
EPA 524.2 REV 4.1	CHLOROBENZENE	NY
EPA 524.2 REV 4.1	CHLOROFORM	NY
EPA 524.2 REV 4.1	ETHYLBENZENE	NY
EPA 524.2 REV 4.1	STYRENE	NY
EPA 524.2 REV 4.1	TOLUENE	NY
EPA 524.2 REV 4.1	TRICHLOROETHENE (TRICHLOROETHYLENE)	NY
EPA 524.2 REV 4.1	XYLENE (TOTAL)	NY
SM 2320 B-1997	ALKALINITY AS CACO3	NY
SM 4500-CL⁻ E-1997	CHLORIDE	NY

This Scope of Accreditation must accompany the Certificate issued by Virginia DCLS with the same Certificate Number indicated above.

Commonwealth of Virginia

Department of General Services
Division of Consolidated Laboratory Services

Scope of Accreditation

VELAP Certificate No.: 2749

ALS ENVIRONMENTAL - ROCHESTER
1565 JEFFERSON ROAD, BUILDING 300, SUITE 300
ROCHESTER, NY 14623

Virginia Laboratory ID: 460167
Effective Date: January 31, 2014
Expiration Date: June 14, 2014

NON-POTABLE WATER

METHOD	ANALYTE	PRIMARY
EPA 120.1	CONDUCTIVITY	NY
EPA 1311	PREP: TOXICITY CHARACTERISTIC LEACHING PROCEDURE	NY
EPA 1631 E	MERCURY	NY
EPA 1664 A	OIL & GREASE	NY
EPA 1664 A	TOTAL PETROLEUM HYDROCARBONS (TPH)	NY
EPA 180.1 REV 2	TURBIDITY	NY
EPA 200.7 REV 4.4	ALUMINUM	NY
EPA 200.7 REV 4.4	ANTIMONY	NY
EPA 200.7 REV 4.4	ARSENIC	NY
EPA 200.7 REV 4.4	BARIUM	NY
EPA 200.7 REV 4.4	BERYLLIUM	NY
EPA 200.7 REV 4.4	BORON	NY
EPA 200.7 REV 4.4	CADMIUM	NY
EPA 200.7 REV 4.4	CALCIUM	NY
EPA 200.7 REV 4.4	CHROMIUM	NY
EPA 200.7 REV 4.4	COBALT	NY
EPA 200.7 REV 4.4	COPPER	NY
EPA 200.7 REV 4.4	IRON	NY
EPA 200.7 REV 4.4	LEAD	NY
EPA 200.7 REV 4.4	MAGNESIUM	NY
EPA 200.7 REV 4.4	MANGANESE	NY
EPA 200.7 REV 4.4	MOLYBDENUM	NY
EPA 200.7 REV 4.4	NICKEL	NY
EPA 200.7 REV 4.4	POTASSIUM	NY
EPA 200.7 REV 4.4	SELENIUM	NY
EPA 200.7 REV 4.4	SILVER	NY
EPA 200.7 REV 4.4	SODIUM	NY
EPA 200.7 REV 4.4	THALLIUM	NY
EPA 200.7 REV 4.4	TIN	NY
EPA 200.7 REV 4.4	VANADIUM	NY
EPA 200.7 REV 4.4	ZINC	NY
EPA 200.8 REV 5.4	ANTIMONY	NY
EPA 200.8 REV 5.4	ARSENIC	NY
EPA 200.8 REV 5.4	BARIUM	NY
EPA 200.8 REV 5.4	BERYLLIUM	NY
EPA 200.8 REV 5.4	CADMIUM	NY
EPA 200.8 REV 5.4	CHROMIUM	NY
EPA 200.8 REV 5.4	COBALT	NY
EPA 200.8 REV 5.4	COPPER	NY
EPA 200.8 REV 5.4	LEAD	NY
EPA 200.8 REV 5.4	MANGANESE	NY
EPA 200.8 REV 5.4	MOLYBDENUM	NY
EPA 200.8 REV 5.4	NICKEL	NY
EPA 200.8 REV 5.4	SELENIUM	NY
EPA 200.8 REV 5.4	SILVER	NY
EPA 200.8 REV 5.4	THALLIUM	NY
EPA 200.8 REV 5.4	VANADIUM	NY
EPA 200.8 REV 5.4	ZINC	NY
EPA 245.1 REV 3	MERCURY	NY
EPA 279.2	THALLIUM	NY
EPA 300.0 REV 2.1	BROMIDE	NY
EPA 300.0 REV 2.1	CHLORIDE	NY
EPA 300.0 REV 2.1	FLUORIDE	NY
EPA 300.0 REV 2.1	NITRATE AS N	NY
EPA 300.0 REV 2.1	NITRITE AS N	NY
EPA 300.0 REV 2.1	SULFATE	NY
EPA 3010 A	PREP: ACID DIGESTION OF AQUEOUS SAMPLES AND EXTRACTS FOR TOTAL METALS	NY
EPA 3020 A	PREP: ACID DIGESTION OF AQUEOUS SAMPLES AND EXTRACTS FOR TOTAL METALS	NY
EPA 335.4	CYANIDE	NY
EPA 350.1 REV 2	AMMONIA AS N	NY
EPA 351.2 REV 2	KJELDAHL NITROGEN - TOTAL	NY
EPA 3510 C	PREP: LIQUID-LIQUID EXTRACTION	NY
EPA 3520 C	PREP: CONTINUOUS LIQUID-LIQUID EXTRACTION	NY
EPA 353.2 REV 2	NITRATE AS N	NY
EPA 353.2 REV 2	NITRITE AS N	NY
EPA 365.1 REV 2	ORTHOPHOSPHATE AS P	NY
EPA 365.1 REV 2	PHOSPHORUS, TOTAL	NY
EPA 420.4 REV 1	TOTAL PHENOLICS	NY

Commonwealth of Virginia

Department of General Services
Division of Consolidated Laboratory Services

Scope of Accreditation

VELAP Certificate No.: 2749

ALS ENVIRONMENTAL - ROCHESTER
1565 JEFFERSON ROAD, BUILDING 300, SUITE 300
ROCHESTER, NY 14623

Virginia Laboratory ID: 460167
Effective Date: January 31, 2014
Expiration Date: June 14, 2014

NON-POTABLE WATER

METHOD	ANALYTE	PRIMARY
EPA 5030	PREP: PURGE AND TRAP FOR AQUEOUS SAMPLES	NY
EPA 6010 B	ANTIMONY	NY
EPA 6010 B	BARIUM	NY
EPA 6010 B	CADMIUM	NY
EPA 6010 B	CHROMIUM	NY
EPA 6010 B	COPPER	NY
EPA 6010 B	LEAD	NY
EPA 6010 B	MANGANESE	NY
EPA 6010 B	NICKEL	NY
EPA 6010 B	SILVER	NY
EPA 6010 B	TIN	NY
EPA 6010 B	VANADIUM	NY
EPA 6010 C	ALUMINUM	NY
EPA 6010 C	ARSENIC	NY
EPA 6010 C	BERYLLIUM	NY
EPA 6010 C	CADMIUM	NY
EPA 6010 C	CHROMIUM	NY
EPA 6010 C	COPPER	NY
EPA 6010 C	LEAD	NY
EPA 6010 C	MANGANESE	NY
EPA 6010 C	NICKEL	NY
EPA 6010 C	SELENIUM	NY
EPA 6010 C	SODIUM	NY
EPA 6010 C	THALLIUM	NY
EPA 6010 C	TITANIUM	NY
EPA 6010 C	ZINC	NY
EPA 602	ETHYLBENZENE	NY
EPA 6020 A	ANTIMONY	NY
EPA 6020 A	BARIUM	NY
EPA 6020 A	CADMIUM	NY
EPA 6020 A	COBALT	NY
EPA 6020 A	LEAD	NY
EPA 6020 A	NICKEL	NY
EPA 6020 A	SILVER	NY
EPA 6020 A	VANADIUM	NY
EPA 6020 A - EXTENDED	MOLYBDENUM	NY
EPA 608	4,4'-DDE	NY
EPA 608	ALDRIN	NY
EPA 6010 B	ALUMINUM	NY
EPA 6010 B	ARSENIC	NY
EPA 6010 B	BERYLLIUM	NY
EPA 6010 B	CALCIUM	NY
EPA 6010 B	COBALT	NY
EPA 6010 B	IRON	NY
EPA 6010 B	MAGNESIUM	NY
EPA 6010 B	MOLYBDENUM	NY
EPA 6010 B	SELENIUM	NY
EPA 6010 B	THALLIUM	NY
EPA 6010 B	TITANIUM	NY
EPA 6010 B	ZINC	NY
EPA 6010 C	ANTIMONY	NY
EPA 6010 C	BARIUM	NY
EPA 6010 C	BORON	NY
EPA 6010 C	CALCIUM	NY
EPA 6010 C	COBALT	NY
EPA 6010 C	IRON	NY
EPA 6010 C	MAGNESIUM	NY
EPA 6010 C	MOLYBDENUM	NY
EPA 6010 C	POTASSIUM	NY
EPA 6010 C	SILVER	NY
EPA 6010 C	STRONTIUM	NY
EPA 6010 C	TIN	NY
EPA 6010 C	VANADIUM	NY
EPA 602	BENZENE	NY
EPA 602	TOLUENE	NY
EPA 6020 A	ARSENIC	NY
EPA 6020 A	BERYLLIUM	NY
EPA 6020 A	CHROMIUM	NY
EPA 6020 A	COPPER	NY
EPA 6020 A	MANGANESE	NY
EPA 6020 A	SELENIUM	NY
EPA 6020 A	THALLIUM	NY
EPA 6020 A	ZINC	NY
EPA 608	4,4'-DDD	NY
EPA 608	4,4'-DDT	NY

Commonwealth of Virginia

Department of General Services
Division of Consolidated Laboratory Services

Scope of Accreditation

VELAP Certificate No.: 2749

ALS ENVIRONMENTAL - ROCHESTER
1565 JEFFERSON ROAD, BUILDING 300, SUITE 300
ROCHESTER, NY 14623

Virginia Laboratory ID: 460167
Effective Date: January 31, 2014
Expiration Date: June 14, 2014

NON-POTABLE WATER

METHOD	ANALYTE	PRIMARY
EPA 608	ALPHA-BHC (ALPHA-HEXACHLOROCYCLOHEXANE)	NY
EPA 608	AROCLOR-1221 (PCB-1221)	NY
EPA 608	AROCLOR-1242 (PCB-1242)	NY
EPA 608	AROCLOR-1254 (PCB-1254)	NY
EPA 608	BETA-BHC (BETA-HEXACHLOROCYCLOHEXANE)	NY
EPA 608	DELTA-BHC	NY
EPA 608	ENDOSULFAN I	NY
EPA 608	ENDOSULFAN SULFATE	NY
EPA 608	ENDRIN ALDEHYDE	NY
EPA 608	HEPTACHLOR	NY
EPA 608	TOXAPHENE (CHLORINATED CAMPHENE)	NY
EPA 610 (HPLC)	ACENAPHTHYLENE	NY
EPA 610 (HPLC)	BENZO(A)ANTHRACENE	NY
EPA 610 (HPLC)	BENZO(G,H,I)PERYLENE	NY
EPA 610 (HPLC)	BENZO[B]FLUORANTHENE	NY
EPA 610 (HPLC)	DIBENZO(A,H) ANTHRACENE	NY
EPA 610 (HPLC)	FLUORENE	NY
EPA 610 (HPLC)	NAPHTHALENE	NY
EPA 610 (HPLC)	PYRENE	NY
EPA 624	1,1,2,2-TETRACHLOROETHANE	NY
EPA 624	1,1-DICHLOROETHANE	NY
EPA 624	1,2-DICHLOROETHANE (ETHYLENE DICHLORIDE)	NY
EPA 624	1,3-DICHLOROBENZENE	NY
EPA 624	2-CHLOROETHYL VINYL ETHER	NY
EPA 624	ACRYLONITRILE	NY
EPA 624	BROMODICHLOROMETHANE	NY
EPA 624	CARBON TETRACHLORIDE	NY
EPA 624	CHLORODIBROMOMETHANE	NY
EPA 624	CHLOROFORM	NY
EPA 624	ETHYLBENZENE	NY
EPA 624	METHYL CHLORIDE (CHLOROMETHANE)	NY
EPA 624	TETRACHLOROETHENE (PERCHLOROETHENE)	NY

METHOD	ANALYTE	PRIMARY
EPA 608	AROCLOR-1016 (PCB-1016)	NY
EPA 608	AROCLOR-1232 (PCB-1232)	NY
EPA 608	AROCLOR-1248 (PCB-1248)	NY
EPA 608	AROCLOR-1260 (PCB-1260)	NY
EPA 608	CHLORDANE (TECH.)	NY
EPA 608	DIELDRIN	NY
EPA 608	ENDOSULFAN II	NY
EPA 608	ENDRIN	NY
EPA 608	GAMMA-BHC (LINDANE, GAMMA-HEXACHLOROCYCLOHEXANE)	NY
EPA 608	HEPTACHLOR EPOXIDE	NY
EPA 610 (HPLC)	ACENAPHTHENE	NY
EPA 610 (HPLC)	ANTHRACENE	NY
EPA 610 (HPLC)	BENZO(A)PYRENE	NY
EPA 610 (HPLC)	BENZO(K)FLUORANTHENE	NY
EPA 610 (HPLC)	CHRYSENE	NY
EPA 610 (HPLC)	FLUORANTHENE	NY
EPA 610 (HPLC)	INDENO(1,2,3-CD) PYRENE	NY
EPA 610 (HPLC)	PHENANTHRENE	NY
EPA 624	1,1,1-TRICHLOROETHANE	NY
EPA 624	1,1,2-TRICHLOROETHANE	NY
EPA 624	1,2-DICHLOROBENZENE	NY
EPA 624	1,2-DICHLOROPROPANE	NY
EPA 624	1,4-DICHLOROBENZENE	NY
EPA 624	ACROLEIN (PROPENAL)	NY
EPA 624	BENZENE	NY
EPA 624	BROMOFORM	NY
EPA 624	CHLOROBENZENE	NY
EPA 624	CHLOROETHANE (ETHYL CHLORIDE)	NY
EPA 624	CIS-1,3-DICHLOROPROPENE	NY
EPA 624	METHYL BROMIDE (BROMOMETHANE)	NY
EPA 624	METHYLENE CHLORIDE (DICHLOROMETHANE)	NY
EPA 624	TOLUENE	NY

Commonwealth of Virginia

Department of General Services
Division of Consolidated Laboratory Services

Scope of Accreditation

VELAP Certificate No.: 2749

ALS ENVIRONMENTAL - ROCHESTER
1565 JEFFERSON ROAD, BUILDING 300, SUITE 300
ROCHESTER, NY 14623

Virginia Laboratory ID: 460167
Effective Date: January 31, 2014
Expiration Date: June 14, 2014

NON-POTABLE WATER

METHOD	ANALYTE	PRIMARY
EPA 624	TRANS-1,2-DICHLOROETHENE	NY
EPA 624	TRICHLOROETHENE (TRICHLOROETHYLENE)	NY
EPA 624	VINYL CHLORIDE	NY
EPA 624 - EXTENDED	XYLENE (TOTAL)	NY
EPA 625	2,4,6-TRICHLOROPHENOL	NY
EPA 625	2,4-DIMETHYLPHENOL	NY
EPA 625	2,4-DINITROTOLUENE (2,4-DNT)	NY
EPA 625	2-CHLORONAPHTHALENE	NY
EPA 625	2-METHYL-4,6-DINITROPHENOL (4,6-DINITRO-2-METHYLPHENOL)	NY
EPA 625	3,3'-DICHLOROBENZIDINE	NY
EPA 625	4-CHLORO-3-METHYLPHENOL	NY
EPA 625	4-NITROPHENOL	NY
EPA 625	ACENAPHTHYLENE	NY
EPA 625	BENZIDINE	NY
EPA 625	BENZO(A)PYRENE	NY
EPA 625	BENZO(K)FLUORANTHENE	NY
EPA 625	BIS(2-CHLOROETHOXY)METHANE	NY
EPA 625	BIS(2-CHLOROISOPROPYL) ETHER	NY
EPA 625	BUTYL BENZYL PHTHALATE	NY
EPA 625	DI-N-BUTYL PHTHALATE	NY
EPA 625	DIBENZO(A,H) ANTHRACENE	NY
EPA 625	DIMETHYL PHTHALATE	NY
EPA 625	FLUORENE	NY
EPA 625	HEXACHLOROBUTADIENE (1,3-HEXACHLOROBUTADIENE)	NY
EPA 625	HEXACHLOROETHANE	NY
EPA 625	ISOPHORONE	NY
EPA 625	N-NITROSODIMETHYLAMINE	NY
EPA 625	NAPHTHALENE	NY
EPA 625	PENTACHLOROPHENOL	NY
EPA 625	PHENOL	NY
EPA 7010	ARSENIC	NY
EPA 7010	SELENIUM	NY
EPA 7470 A	MERCURY	NY

METHOD	ANALYTE	PRIMARY
EPA 624	TRANS-1,3-DICHLOROPROPENE	NY
EPA 624	TRICHLOROFLUOROMETHANE (FLUOROTRICHLOROMETHANE, FREON 11)	NY
EPA 624 - EXTENDED	1,1-DICHLOROETHYLENE	NY
EPA 625	1,2,4-TRICHLOROBENZENE	NY
EPA 625	2,4-DICHLOROPHENOL	NY
EPA 625	2,4-DINITROPHENOL	NY
EPA 625	2,6-DINITROTOLUENE (2,6-DNT)	NY
EPA 625	2-CHLOROPHENOL	NY
EPA 625	2-NITROPHENOL	NY
EPA 625	4-BROMOPHENYL PHENYL ETHER	NY
EPA 625	4-CHLOROPHENYL PHENYLETHER	NY
EPA 625	ACENAPHTHENE	NY
EPA 625	ANTHRACENE	NY
EPA 625	BENZO(A)ANTHRACENE	NY
EPA 625	BENZO(G,H,I)PERYLENE	NY
EPA 625	BENZO[B]FLUORANTHENE	NY
EPA 625	BIS(2-CHLOROETHYL) ETHER	NY
EPA 625	BIS(2-ETHYLHEXYL) PHTHALATE (DI(2-ETHYLHEXYL)PHTHALATE), (DEHP)	NY
EPA 625	CHRYSENE	NY
EPA 625	DI-N-OCTYL PHTHALATE	NY
EPA 625	DIETHYL PHTHALATE	NY
EPA 625	FLUORANTHENE	NY
EPA 625	HEXACHLOROBENZENE	NY
EPA 625	HEXACHLOROCYCLOPENTADIENE	NY
EPA 625	INDENO(1,2,3-CD) PYRENE	NY
EPA 625	N-NITROSODI-N-PROPYLAMINE	NY
EPA 625	N-NITROSODIPHENYLAMINE	NY
EPA 625	NITROBENZENE	NY
EPA 625	PHENANTHRENE	NY
EPA 625	PYRENE	NY
EPA 7010	LEAD	NY
EPA 7010	THALLIUM	NY
EPA 8011	1,2-DIBROMO-3-CHLOROPROPANE (DBCP)	NY

Commonwealth of Virginia

Department of General Services
Division of Consolidated Laboratory Services

Scope of Accreditation

VELAP Certificate No.: 2749

ALS ENVIRONMENTAL - ROCHESTER
1565 JEFFERSON ROAD, BUILDING 300, SUITE 300
ROCHESTER, NY 14623

Virginia Laboratory ID: 460167
Effective Date: January 31, 2014
Expiration Date: June 14, 2014

NON-POTABLE WATER

METHOD	ANALYTE	PRIMARY	METHOD	ANALYTE	PRIMARY
EPA 8011	1,2-DIBROMOETHANE (EDB, ETHYLENE DIBROMIDE)	NY	EPA 8021 B	BENZENE	NY
EPA 8021 B	ETHYLBENZENE	NY	EPA 8021 B	TOLUENE	NY
EPA 8021 B	XYLENE (TOTAL)	NY	EPA 8021 B - EXTENDED	METHYL TERT-BUTYL ETHER (MTBE)	NY
EPA 8081 B	4,4'-DDD	NY	EPA 8081 B	4,4'-DDE	NY
EPA 8081 B	4,4'-DDT	NY	EPA 8081 B	ALDRIN	NY
EPA 8081 B	ALPHA-BHC (ALPHA-HEXACHLOROCYCLOHEXANE)	NY	EPA 8081 B	ALPHA-CHLORDANE [CIS-CHLORDANE]	NY
EPA 8081 B	BETA-BHC (BETA-HEXACHLOROCYCLOHEXANE)	NY	EPA 8081 B	CHLORDANE (TECH.)	NY
EPA 8081 B	DELTA-BHC	NY	EPA 8081 B	DIELDRIN	NY
EPA 8081 B	ENDOSULFAN I	NY	EPA 8081 B	ENDOSULFAN II	NY
EPA 8081 B	ENDOSULFAN SULFATE	NY	EPA 8081 B	ENDRIN	NY
EPA 8081 B	ENDRIN ALDEHYDE	NY	EPA 8081 B	ENDRIN KETONE	NY
EPA 8081 B	GAMMA-BHC (LINDANE, GAMMA-HEXACHLOROCYCLOHEXANE)	NY	EPA 8081 B	GAMMA-CHLORDANE [BETA-CHLORDANE, TRANS-CHLORDANE]	NY
EPA 8081 B	HEPTACHLOR	NY	EPA 8081 B	HEPTACHLOR EPOXIDE	NY
EPA 8081 B	HEXACHLOROBENZENE	NY	EPA 8081 B	METHOXYCHLOR	NY
EPA 8081 B	TOXAPHENE (CHLORINATED CAMPHENE)	NY	EPA 8081 B - EXTENDED	KEPONE	NY
EPA 8082 A	AROCLOR-1016 (PCB-1016)	NY	EPA 8082 A	AROCLOR-1221 (PCB-1221)	NY
EPA 8082 A	AROCLOR-1232 (PCB-1232)	NY	EPA 8082 A	AROCLOR-1242 (PCB-1242)	NY
EPA 8082 A	AROCLOR-1248 (PCB-1248)	NY	EPA 8082 A	AROCLOR-1254 (PCB-1254)	NY
EPA 8082 A	AROCLOR-1260 (PCB-1260)	NY	EPA 8151 A	2,4,5-T	NY
EPA 8151 A	2,4-D	NY	EPA 8151 A	DICAMBA	NY
EPA 8151 A	DINOSEB (2-SEC-BUTYL-4,6-DINITROPHENOL, DNBP)	NY	EPA 8151 A	SILVEX (2,4,5-TP)	NY
EPA 8260 B	1,1,1,2-TETRACHLOROETHANE	NY	EPA 8260 B	1,1,1-TRICHLOROETHANE	NY
EPA 8260 B	1,1,2,2-TETRACHLOROETHANE	NY	EPA 8260 B	1,1,2-TRICHLOROETHANE	NY
EPA 8260 B	1,1-DICHLOROETHANE	NY	EPA 8260 B	1,1-DICHLOROETHYLENE	NY
EPA 8260 B	1,1-DICHLOROPROPENE	NY	EPA 8260 B	1,2,3-TRICHLOROBENZENE	NY
EPA 8260 B	1,2,3-TRICHLOROPROPANE	NY	EPA 8260 B	1,2,4-TRICHLOROBENZENE	NY
EPA 8260 B	1,2,4-TRIMETHYLBENZENE	NY	EPA 8260 B	1,2-DIBROMO-3-CHLOROPROPANE (DBCP)	NY
EPA 8260 B	1,2-DIBROMOETHANE (EDB, ETHYLENE DIBROMIDE)	NY	EPA 8260 B	1,2-DICHLOROBENZENE	NY
EPA 8260 B	1,2-DICHLOROETHANE (ETHYLENE DICHLORIDE)	NY	EPA 8260 B	1,2-DICHLOROPROPANE	NY
EPA 8260 B	1,3,5-TRIMETHYLBENZENE	NY	EPA 8260 B	1,3-DICHLOROBENZENE	NY
EPA 8260 B	1,3-DICHLOROPROPANE	NY	EPA 8260 B	1,4-DICHLOROBENZENE	NY

Commonwealth of Virginia

Department of General Services
Division of Consolidated Laboratory Services

Scope of Accreditation

VELAP Certificate No.: 2749

ALS ENVIRONMENTAL - ROCHESTER
1565 JEFFERSON ROAD, BUILDING 300, SUITE 300
ROCHESTER, NY 14623

Virginia Laboratory ID: 460167
Effective Date: January 31, 2014
Expiration Date: June 14, 2014

NON-POTABLE WATER

METHOD	ANALYTE	PRIMARY
EPA 8260 B	1,4-DIOXANE (1,4-DIETHYLENEOXIDE)	NY
EPA 8260 B	2-BUTANONE (METHYL ETHYL KETONE, MEK)	NY
EPA 8260 B	2-CHLOROTOLUENE	NY
EPA 8260 B	4-CHLOROTOLUENE	NY
EPA 8260 B	4-METHYL-2-PENTANONE (MIBK)	NY
EPA 8260 B	ACETONITRILE	NY
EPA 8260 B	ACRYLONITRILE	NY
EPA 8260 B	BENZENE	NY
EPA 8260 B	BROMOCHLOROMETHANE	NY
EPA 8260 B	BROMOFORM	NY
EPA 8260 B	CARBON TETRACHLORIDE	NY
EPA 8260 B	CHLORODIBROMOMETHANE	NY
EPA 8260 B	CHLOROFORM	NY
EPA 8260 B	CIS-1,2-DICHLOROETHYLENE	NY
EPA 8260 B	DIBROMOMETHANE (METHYLENE BROMIDE)	NY
EPA 8260 B	ETHYL ACETATE	NY
EPA 8260 B	ETHYLBENZENE	NY
EPA 8260 B	IODOMETHANE (METHYL IODIDE)	NY
EPA 8260 B	ISOPROPYLBENZENE	NY
EPA 8260 B	METHYL BROMIDE (BROMOMETHANE)	NY
EPA 8260 B	METHYL METHACRYLATE	NY
EPA 8260 B	METHYLENE CHLORIDE (DICHLOROMETHANE)	NY
EPA 8260 B	N-PROPYLBENZENE	NY
EPA 8260 B	O-TOLUIDINE (2-METHYLANILINE)	NY
EPA 8260 B	SEC-BUTYLBENZENE	NY
EPA 8260 B	TERT-BUTYL ALCOHOL	NY
EPA 8260 B	TETRACHLOROETHENE (PERCHLOROETHENE)	NY
EPA 8260 B	TRANS-1,2-DICHLOROETHENE	NY
EPA 8260 B	TRANS-1,4-DICHLORO-2-BUTENE	NY
EPA 8260 B	TRICHLOROFLUOROMETHANE (FLUOROTRICHLOROMETHANE, FREON 11)	NY
EPA 8260 B	2,2-DICHLOROPROPANE	NY
EPA 8260 B	2-CHLOROETHYL VINYL ETHER	NY
EPA 8260 B	2-HEXANONE	NY
EPA 8260 B	4-ISOPROPYLTOLUENE (P-CYMENE)	NY
EPA 8260 B	ACETONE	NY
EPA 8260 B	ACROLEIN (PROPENAL)	NY
EPA 8260 B	ALLYL CHLORIDE (3-CHLOROPROPENE)	NY
EPA 8260 B	BENZYL CHLORIDE	NY
EPA 8260 B	BROMODICHLOROMETHANE	NY
EPA 8260 B	CARBON DISULFIDE	NY
EPA 8260 B	CHLOROBENZENE	NY
EPA 8260 B	CHLOROETHANE (ETHYL CHLORIDE)	NY
EPA 8260 B	CHLOROPRENE (2-CHLORO-1,3-BUTADIENE)	NY
EPA 8260 B	CIS-1,3-DICHLOROPROPENE	NY
EPA 8260 B	DICHLORODIFLUOROMETHANE (FREON-12)	NY
EPA 8260 B	ETHYL METHACRYLATE	NY
EPA 8260 B	HEXACHLOROBUTADIENE (1,3-HEXACHLOROBUTADIENE)	NY
EPA 8260 B	ISOBUTYL ALCOHOL (2-METHYL-1-PROPANOL)	NY
EPA 8260 B	METHACRYLONITRILE	NY
EPA 8260 B	METHYL CHLORIDE (CHLOROMETHANE)	NY
EPA 8260 B	METHYL TERT-BUTYL ETHER (MTBE)	NY
EPA 8260 B	N-BUTYLBENZENE	NY
EPA 8260 B	NAPHTHALENE	NY
EPA 8260 B	PROPIONITRILE (ETHYL CYANIDE)	NY
EPA 8260 B	STYRENE	NY
EPA 8260 B	TERT-BUTYLBENZENE	NY
EPA 8260 B	TOLUENE	NY
EPA 8260 B	TRANS-1,3-DICHLOROPROPENE	NY
EPA 8260 B	TRICHLOROETHENE (TRICHLOROETHYLENE)	NY

Commonwealth of Virginia

Department of General Services
Division of Consolidated Laboratory Services

Scope of Accreditation

VELAP Certificate No.: 2749

ALS ENVIRONMENTAL - ROCHESTER
1565 JEFFERSON ROAD, BUILDING 300, SUITE 300
ROCHESTER, NY 14623

Virginia Laboratory ID: 460167
Effective Date: January 31, 2014
Expiration Date: June 14, 2014

NON-POTABLE WATER

METHOD	ANALYTE	PRIMARY
EPA 8260 B	VINYL ACETATE	NY
EPA 8260 B	XYLENE (TOTAL)	NY
EPA 8260 B - EXTENDED	1,2-DICHLORO-1,1,2-TRIFLUOROE THANE	NY
EPA 8260 B - EXTENDED	CYCLOHEXANE	NY
EPA 8260 B - EXTENDED	ETHYL-T-BUTYLETHER (2-ETHOXY-2-METHYLPROPANE, ETBE)	NY
EPA 8270 D	1,2,4,5-TETRACHLOROBENZENE	NY
EPA 8270 D	1,2-DICHLOROBENZENE	NY
EPA 8270 D	1,3-DICHLOROBENZENE	NY
EPA 8270 D	1,4-DICHLOROBENZENE	NY
EPA 8270 D	1,4-PHENYLENEDIAMINE	NY
EPA 8270 D	2,3,4,6-TETRACHLOROPHENOL	NY
EPA 8270 D	2,4,6-TRICHLOROPHENOL	NY
EPA 8270 D	2,4-DIMETHYLPHENOL	NY
EPA 8270 D	2,4-DINITROTOLUENE (2,4-DNT)	NY
EPA 8270 D	2,6-DINITROTOLUENE (2,6-DNT)	NY
EPA 8270 D	2-CHLOROPHENOL	NY
EPA 8270 D	2-METHYLNAPHTHALENE	NY
EPA 8270 D	2-NAPHTHYLAMINE	NY
EPA 8270 D	2-NITROPHENOL	NY
EPA 8270 D	3,3'-DIMETHYLBENZIDINE	NY
EPA 8270 D	3-METHYLPHENOL (M-CRESOL)	NY
EPA 8270 D	4-AMINOBIPHENYL	NY
EPA 8270 D	4-CHLORO-3-METHYLPHENOL	NY
EPA 8270 D	4-CHLOROPHENYL PHENYLETHER	NY
EPA 8270 D	4-METHYLPHENOL (P-CRESOL)	NY
EPA 8270 D	4-NITROPHENOL	NY
EPA 8270 D	7,12-DIMETHYLBENZ(A) ANTHRACENE	NY
EPA 8270 D	ACENAPHTHYLENE	NY
EPA 8270 D	ANILINE	NY
EPA 8270 D	BENZIDINE	NY
EPA 8270 D	BENZO(A)PYRENE	NY
EPA 8270 D	BENZO(K)FLUORANTHENE	NY
EPA 8270 D	BENZO[B]FLUORANTHENE	NY

METHOD	ANALYTE	PRIMARY
EPA 8260 B	VINYL CHLORIDE	NY
EPA 8260 B - EXTENDED	1,1,2-TRICHLORO-1,2,2-TRIFLUOR OETHANE (FREON 113)	NY
EPA 8260 B - EXTENDED	1,3,5-TRICHLOROBENZENE	NY
EPA 8260 B - EXTENDED	DI-ISOPROPYLETHER (DIPE, ISOPROPYL ETHER)	NY
EPA 8260 B - EXTENDED	T-AMYLMETHYLETHER (TAME)	NY
EPA 8270 D	1,2,4-TRICHLOROBENZENE	NY
EPA 8270 D	1,3,5-TRINITROBENZENE (1,3,5-TNB)	NY
EPA 8270 D	1,3-DINITROBENZENE (1,3-DNB)	NY
EPA 8270 D	1,4-NAPHTHOQUINONE	NY
EPA 8270 D	1-NAPHTHYLAMINE	NY
EPA 8270 D	2,4,5-TRICHLOROPHENOL	NY
EPA 8270 D	2,4-DICHLOROPHENOL	NY
EPA 8270 D	2,4-DINITROPHENOL	NY
EPA 8270 D	2,6-DICHLOROPHENOL	NY
EPA 8270 D	2-CHLORONAPHTHALENE	NY
EPA 8270 D	2-METHYL-4,6-DINITROPHENOL (4,6-DINITRO-2-METHYLPHENOL)	NY
EPA 8270 D	2-METHYLPHENOL (O-CRESOL)	NY
EPA 8270 D	2-NITROANILINE	NY
EPA 8270 D	3,3'-DICHLOROBENZIDINE	NY
EPA 8270 D	3-METHYLCHOLANTHRENE	NY
EPA 8270 D	3-NITROANILINE	NY
EPA 8270 D	4-BROMOPHENYL PHENYL ETHER	NY
EPA 8270 D	4-CHLOROANILINE	NY
EPA 8270 D	4-DIMETHYL AMINOAZOBENZENE	NY
EPA 8270 D	4-NITROANILINE	NY
EPA 8270 D	5-NITRO-O-TOLUIDINE	NY
EPA 8270 D	ACENAPHTHENE	NY
EPA 8270 D	ACETOPHENONE	NY
EPA 8270 D	ANTHRACENE	NY
EPA 8270 D	BENZO(A)ANTHRACENE	NY
EPA 8270 D	BENZO(G,H,I)PERYLENE	NY
EPA 8270 D	BENZOIC ACID	NY
EPA 8270 D	BENZYL ALCOHOL	NY

Commonwealth of Virginia

Department of General Services
Division of Consolidated Laboratory Services

Scope of Accreditation

VELAP Certificate No.: 2749

ALS ENVIRONMENTAL - ROCHESTER
1565 JEFFERSON ROAD, BUILDING 300, SUITE 300
ROCHESTER, NY 14623

Virginia Laboratory ID: 460167
Effective Date: January 31, 2014
Expiration Date: June 14, 2014

NON-POTABLE WATER

METHOD	ANALYTE	PRIMARY
EPA 8270 D	BIS(2-CHLOROETHOXY)METHANE	NY
EPA 8270 D	BIS(2-CHLOROISOPROPYL) ETHER	NY
EPA 8270 D	BUTYL BENZYL PHTHALATE	NY
EPA 8270 D	CHRYSENE	NY
EPA 8270 D	DI-N-OCTYL PHTHALATE	NY
EPA 8270 D	DIBENZO(A,H) ANTHRACENE	NY
EPA 8270 D	DIETHYL PHTHALATE	NY
EPA 8270 D	DIMETHYL PHTHALATE	NY
EPA 8270 D	DIPHENYLAMINE	NY
EPA 8270 D	ETHYL METHANESULFONATE	NY
EPA 8270 D	FLUORENE	NY
EPA 8270 D	HEXACHLOROBUTADIENE (1,3-HEXACHLOROBUTADIENE)	NY
EPA 8270 D	HEXACHLOROETHANE	NY
EPA 8270 D	INDENO(1,2,3-CD) PYRENE	NY
EPA 8270 D	ISOPHORONE	NY
EPA 8270 D	METHAPYRILENE	NY
EPA 8270 D	METHYL PARATHION (PARATHION, METHYL)	NY
EPA 8270 D	N-NITROSODI-N-PROPYLAMINE	NY
EPA 8270 D	N-NITROSODIMETHYLAMINE	NY
EPA 8270 D	N-NITROSOPIPERIDINE	NY
EPA 8270 D	NAPHTHALENE	NY
EPA 8270 D	O,O,O-TRIETHYL PHOSPHOROTHIOATE	NY
EPA 8270 D	PARATHION (PARATHION - ETHYL)	NY
EPA 8270 D	PENTACHLORONITROBENZENE	NY
EPA 8270 D	PHENACETIN	NY
EPA 8270 D	PHENOL	NY
EPA 8270 D	PRONAMIDE (KERB)	NY
EPA 8270 D	SAFROLE	NY
EPA 8270 D - EXTENDED	PYRIDINE	NY
EPA 9040 C	PH	NY
EPA 9056 A	BROMIDE	NY
EPA 9056 A	FLUORIDE	NY
EPA 9056 A	NITRITE	NY

METHOD	ANALYTE	PRIMARY
EPA 8270 D	BIS(2-CHLOROETHYL) ETHER	NY
EPA 8270 D	BIS(2-ETHYLHEXYL) PHTHALATE (DI(2-ETHYLHEXYL)PHTHALATE), (DEHP)	NY
EPA 8270 D	CHLOROBENZILATE	NY
EPA 8270 D	DI-N-BUTYL PHTHALATE	NY
EPA 8270 D	DIALLATE	NY
EPA 8270 D	DIBENZOFURAN	NY
EPA 8270 D	DIMETHOATE	NY
EPA 8270 D	DINOSEB (2-SEC-BUTYL-4,6-DINITROPHENOL, DNBP)	NY
EPA 8270 D	DISULFOTON	NY
EPA 8270 D	FLUORANTHENE	NY
EPA 8270 D	HEXACHLOROBENZENE	NY
EPA 8270 D	HEXACHLOROCYCLOPENTADIENE	NY
EPA 8270 D	HEXACHLOROPROPENE	NY
EPA 8270 D	ISODRIN	NY
EPA 8270 D	ISOSAFROLE	NY
EPA 8270 D	METHYL METHANESULFONATE	NY
EPA 8270 D	N-NITROSO-DI-N-BUTYLAMINE	NY
EPA 8270 D	N-NITROSODIETHYLAMINE	NY
EPA 8270 D	N-NITROSODIPHENYLAMINE	NY
EPA 8270 D	N-NITROSOPYRROLIDINE	NY
EPA 8270 D	NITROBENZENE	NY
EPA 8270 D	O-TOLUIDINE (2-METHYLANILINE)	NY
EPA 8270 D	PENTACHLOROBENZENE	NY
EPA 8270 D	PENTACHLOROPHENOL	NY
EPA 8270 D	PHENANTHRENE	NY
EPA 8270 D	PHORATE	NY
EPA 8270 D	PYRENE	NY
EPA 8270 D - EXTENDED	CARBAZOLE	NY
EPA 9034	TOTAL SULFIDES	NY
EPA 9050 A	CONDUCTIVITY	NY
EPA 9056 A	CHLORIDE	NY
EPA 9056 A	NITRATE AS N	NY
EPA 9056 A	SULFATE	NY

Commonwealth of Virginia

Department of General Services
Division of Consolidated Laboratory Services

Scope of Accreditation

VELAP Certificate No.: 2749

ALS ENVIRONMENTAL - ROCHESTER
1565 JEFFERSON ROAD, BUILDING 300, SUITE 300
ROCHESTER, NY 14623

Virginia Laboratory ID: 460167
Effective Date: January 31, 2014
Expiration Date: June 14, 2014

NON-POTABLE WATER

METHOD	ANALYTE	PRIMARY	METHOD	ANALYTE	PRIMARY
EPA 9066	TOTAL PHENOLICS	NY	SM 2120 B-2001	COLOR	NY
SM 2320 B-1997	ALKALINITY AS CACO3	NY	SM 2340 B-1997	TOTAL HARDNESS AS CACO3	NY
SM 2340 C-1997	TOTAL HARDNESS AS CACO3	NY	SM 2540 B-1997	RESIDUE-TOTAL	NY
SM 2540 C-1997	RESIDUE-FILTERABLE (TDS)	NY	SM 2540 D-1997	RESIDUE-NONFILTERABLE (TSS)	NY
SM 2540 F-1997	RESIDUE-SETTLEABLE	NY	SM 3500-CR B-2009	CHROMIUM VI	NY
SM 4500-CL$^-$ E-1997	CHLORIDE	NY	SM 4500-S2$^-$ F-2000	SULFIDE	NY
SM 5310 C-2000	TOTAL ORGANIC CARBON	NY	SM 5540 C-2000	SURFACTANTS - MBAS	NY
USGS I-2700-85	SILICA-DISSOLVED	NY			

SOLID AND CHEMICAL MATERIALS

METHOD	ANALYTE	PRIMARY	METHOD	ANALYTE	PRIMARY
EPA 1010 A	FLASHPOINT	NY	EPA 1311	PREP: TOXICITY CHARACTERISTIC LEACHING PROCEDURE	NY
EPA 1312	PREP: SYNTHETIC PRECIPITATION LEACHING PROCEDURE	NY	EPA 3050 B	PREP: ACID DIGESTION OF SEDIMENTS, SLUDGES, AND SOILS	NY
EPA 3550 C	PREP: ULTRASONIC EXTRACTION	NY	EPA 5035	PREP: CLOSED-SYSTEM PURGE AND TRAP AND EXTRACTION	NY
EPA 6010 B	ALUMINUM	NY	EPA 6010 B	ANTIMONY	NY
EPA 6010 B	ARSENIC	NY	EPA 6010 B	BARIUM	NY
EPA 6010 B	BERYLLIUM	NY	EPA 6010 B	BORON	NY
EPA 6010 B	CADMIUM	NY	EPA 6010 B	CALCIUM	NY
EPA 6010 B	CHROMIUM	NY	EPA 6010 B	COBALT	NY
EPA 6010 B	COPPER	NY	EPA 6010 B	IRON	NY
EPA 6010 B	LEAD	NY	EPA 6010 B	LITHIUM	NY
EPA 6010 B	MAGNESIUM	NY	EPA 6010 B	MANGANESE	NY
EPA 6010 B	MOLYBDENUM	NY	EPA 6010 B	NICKEL	NY
EPA 6010 B	POTASSIUM	NY	EPA 6010 B	SELENIUM	NY
EPA 6010 B	SILICA AS SIO2	NY	EPA 6010 B	SILVER	NY
EPA 6010 B	SODIUM	NY	EPA 6010 B	STRONTIUM	NY
EPA 6010 B	THALLIUM	NY	EPA 6010 B	TIN	NY
EPA 6010 B	VANADIUM	NY	EPA 6010 B	ZINC	NY
EPA 6010 C	ALUMINUM	NY	EPA 6010 C	ANTIMONY	NY
EPA 6010 C	ARSENIC	NY	EPA 6010 C	BARIUM	NY
EPA 6010 C	BERYLLIUM	NY	EPA 6010 C	BORON	NY
EPA 6010 C	CADMIUM	NY	EPA 6010 C	CALCIUM	NY
EPA 6010 C	CHROMIUM	NY	EPA 6010 C	COBALT	NY
EPA 6010 C	COPPER	NY	EPA 6010 C	IRON	NY
EPA 6010 C	LEAD	NY	EPA 6010 C	LITHIUM	NY
EPA 6010 C	MAGNESIUM	NY	EPA 6010 C	MANGANESE	NY

Commonwealth of Virginia

Department of General Services
Division of Consolidated Laboratory Services

Scope of Accreditation

VELAP Certificate No.: 2749

ALS ENVIRONMENTAL - ROCHESTER
1565 JEFFERSON ROAD, BUILDING 300, SUITE 300
ROCHESTER, NY 14623

Virginia Laboratory ID: 460167
Effective Date: January 31, 2014
Expiration Date: June 14, 2014

SOLID AND CHEMICAL MATERIALS

METHOD	ANALYTE	PRIMARY
EPA 6010 C	MOLYBDENUM	NY
EPA 6010 C	POTASSIUM	NY
EPA 6010 C	SILICA AS SIO2	NY
EPA 6010 C	SODIUM	NY
EPA 6010 C	THALLIUM	NY
EPA 6010 C	TITANIUM	NY
EPA 6010 C	ZINC	NY
EPA 6020 A	ARSENIC	NY
EPA 6020 A	BERYLLIUM	NY
EPA 6020 A	CHROMIUM	NY
EPA 6020 A	COPPER	NY
EPA 6020 A	MANGANESE	NY
EPA 6020 A	SELENIUM	NY
EPA 6020 A	THALLIUM	NY
EPA 6020 A	ZINC	NY
EPA 7010	ARSENIC	NY
EPA 7010	SELENIUM	NY
EPA 7196 A	CHROMIUM VI	NY
EPA 7471 B	MERCURY	NY
EPA 8015 B	GASOLINE RANGE ORGANICS (GRO)	NY
EPA 8015 C	GASOLINE RANGE ORGANICS (GRO)	NY
EPA 8021 B	1,3,5-TRIMETHYLBENZENE	NY
EPA 8021 B	BENZENE	NY
EPA 8021 B	ETHYLBENZENE	NY
EPA 8021 B	N-BUTYLBENZENE	NY
EPA 8021 B	SEC-BUTYLBENZENE	NY
EPA 8021 B	TOLUENE	NY
EPA 8021 B - EXTENDED	METHYL TERT-BUTYL ETHER (MTBE)	NY
EPA 8081 B	4,4'-DDE	NY
EPA 8081 B	ALDRIN	NY
EPA 8081 B	ALPHA-CHLORDANE [CIS-CHLORDANE]	NY
EPA 8081 B	CHLORDANE (TECH.)	NY
EPA 8081 B	DIELDRIN	NY
EPA 8081 B	ENDOSULFAN II	NY

METHOD	ANALYTE	PRIMARY
EPA 6010 C	NICKEL	NY
EPA 6010 C	SELENIUM	NY
EPA 6010 C	SILVER	NY
EPA 6010 C	STRONTIUM	NY
EPA 6010 C	TIN	NY
EPA 6010 C	VANADIUM	NY
EPA 6020 A	ANTIMONY	NY
EPA 6020 A	BARIUM	NY
EPA 6020 A	CADMIUM	NY
EPA 6020 A	COBALT	NY
EPA 6020 A	LEAD	NY
EPA 6020 A	NICKEL	NY
EPA 6020 A	SILVER	NY
EPA 6020 A	VANADIUM	NY
EPA 6020 A - EXTENDED	MOLYBDENUM	NY
EPA 7010	LEAD	NY
EPA 7010	THALLIUM	NY
EPA 7471 A	MERCURY	NY
EPA 8015 B	DIESEL RANGE ORGANICS (DRO)	NY
EPA 8015 C	DIESEL RANGE ORGANICS (DRO)	NY
EPA 8021 B	1,2,4-TRIMETHYLBENZENE	NY
EPA 8021 B	4-ISOPROPYLTOLUENE (P-CYMENE)	NY
EPA 8021 B	CHLOROBENZENE	NY
EPA 8021 B	ISOPROPYLBENZENE	NY
EPA 8021 B	N-PROPYLBENZENE	NY
EPA 8021 B	TERT-BUTYLBENZENE	NY
EPA 8021 B	XYLENE (TOTAL)	NY
EPA 8081 B	4,4'-DDD	NY
EPA 8081 B	4,4'-DDT	NY
EPA 8081 B	ALPHA-BHC (ALPHA-HEXACHLOROCYCLOHEXANE)	NY
EPA 8081 B	BETA-BHC (BETA-HEXACHLOROCYCLOHEXANE)	NY
EPA 8081 B	DELTA-BHC	NY
EPA 8081 B	ENDOSULFAN I	NY
EPA 8081 B	ENDOSULFAN SULFATE	NY

Commonwealth of Virginia

Department of General Services
Division of Consolidated Laboratory Services

Scope of Accreditation

VELAP Certificate No.: 2749

ALS ENVIRONMENTAL - ROCHESTER
1565 JEFFERSON ROAD, BUILDING 300, SUITE 300
ROCHESTER, NY 14623

Virginia Laboratory ID: 460167
Effective Date: January 31, 2014
Expiration Date: June 14, 2014

SOLID AND CHEMICAL MATERIALS

METHOD	ANALYTE	PRIMARY
EPA 8081 B	ENDRIN	NY
EPA 8081 B	ENDRIN KETONE	NY
EPA 8081 B	GAMMA-CHLORDANE [BETA-CHLORDANE, TRANS-CHLORDANE]	NY
EPA 8081 B	HEPTACHLOR EPOXIDE	NY
EPA 8081 B	TOXAPHENE (CHLORINATED CAMPHENE)	NY
EPA 8082 A	AROCLOR-1016 (PCB-1016)	NY
EPA 8082 A	AROCLOR-1232 (PCB-1232)	NY
EPA 8082 A	AROCLOR-1248 (PCB-1248)	NY
EPA 8082 A	AROCLOR-1260 (PCB-1260)	NY
EPA 8151 A	2,4-D	NY
EPA 8151 A	SILVEX (2,4,5-TP)	NY
EPA 8260 B	1,1,1-TRICHLOROETHANE	NY
EPA 8260 B	1,1,2-TRICHLOROETHANE	NY
EPA 8260 B	1,1-DICHLOROETHYLENE	NY
EPA 8260 B	1,2,3-TRICHLOROPROPANE	NY
EPA 8260 B	1,2,4-TRIMETHYLBENZENE	NY
EPA 8260 B	1,2-DIBROMOETHANE (EDB, ETHYLENE DIBROMIDE)	NY
EPA 8260 B	1,2-DICHLOROETHANE (ETHYLENE DICHLORIDE)	NY
EPA 8260 B	1,3,5-TRIMETHYLBENZENE	NY
EPA 8260 B	1,3-DICHLOROPROPANE	NY
EPA 8260 B	1,4-DIOXANE (1,4-DIETHYLENEOXIDE)	NY
EPA 8260 B	2-BUTANONE (METHYL ETHYL KETONE, MEK)	NY
EPA 8260 B	2-CHLOROTOLUENE	NY
EPA 8260 B	4-CHLOROTOLUENE	NY
EPA 8260 B	4-METHYL-2-PENTANONE (MIBK)	NY
EPA 8260 B	ACETONITRILE	NY
EPA 8260 B	ACRYLONITRILE	NY
EPA 8260 B	BENZENE	NY
EPA 8260 B	BROMOCHLOROMETHANE	NY
EPA 8260 B	BROMOFORM	NY
EPA 8260 B	CARBON TETRACHLORIDE	NY
EPA 8260 B	CHLORODIBROMOMETHANE	NY

METHOD	ANALYTE	PRIMARY
EPA 8081 B	ENDRIN ALDEHYDE	NY
EPA 8081 B	GAMMA-BHC (LINDANE, GAMMA-HEXACHLOROCYCLOHEXANE)	NY
EPA 8081 B	HEPTACHLOR	NY
EPA 8081 B	METHOXYCHLOR	NY
EPA 8081 B - EXTENDED	KEPONE	NY
EPA 8082 A	AROCLOR-1221 (PCB-1221)	NY
EPA 8082 A	AROCLOR-1242 (PCB-1242)	NY
EPA 8082 A	AROCLOR-1254 (PCB-1254)	NY
EPA 8151 A	2,4,5-T	NY
EPA 8151 A	PENTACHLOROPHENOL	NY
EPA 8260 B	1,1,1,2-TETRACHLOROETHANE	NY
EPA 8260 B	1,1,2,2-TETRACHLOROETHANE	NY
EPA 8260 B	1,1-DICHLOROETHANE	NY
EPA 8260 B	1,1-DICHLOROPROPENE	NY
EPA 8260 B	1,2,4-TRICHLOROBENZENE	NY
EPA 8260 B	1,2-DIBROMO-3-CHLOROPROPANE (DBCP)	NY
EPA 8260 B	1,2-DICHLOROBENZENE	NY
EPA 8260 B	1,2-DICHLOROPROPANE	NY
EPA 8260 B	1,3-DICHLOROBENZENE	NY
EPA 8260 B	1,4-DICHLOROBENZENE	NY
EPA 8260 B	2,2-DICHLOROPROPANE	NY
EPA 8260 B	2-CHLOROETHYL VINYL ETHER	NY
EPA 8260 B	2-HEXANONE	NY
EPA 8260 B	4-ISOPROPYLTOLUENE (P-CYMENE)	NY
EPA 8260 B	ACETONE	NY
EPA 8260 B	ACROLEIN (PROPENAL)	NY
EPA 8260 B	ALLYL CHLORIDE (3-CHLOROPROPENE)	NY
EPA 8260 B	BROMOBENZENE	NY
EPA 8260 B	BROMODICHLOROMETHANE	NY
EPA 8260 B	CARBON DISULFIDE	NY
EPA 8260 B	CHLOROBENZENE	NY
EPA 8260 B	CHLOROETHANE (ETHYL CHLORIDE)	NY

Commonwealth of Virginia

Department of General Services
Division of Consolidated Laboratory Services

Scope of Accreditation

VELAP Certificate No.: 2749

ALS ENVIRONMENTAL - ROCHESTER
1565 JEFFERSON ROAD, BUILDING 300, SUITE 300
ROCHESTER, NY 14623

Virginia Laboratory ID: 460167
Effective Date: January 31, 2014
Expiration Date: June 14, 2014

SOLID AND CHEMICAL MATERIALS

METHOD	ANALYTE	PRIMARY
EPA 8260 B	CHLOROPRENE (2-CHLORO-1,3-BUTADIENE)	NY
EPA 8260 B	CIS-1,3-DICHLOROPROPENE	NY
EPA 8260 B	DIETHYL ETHER	NY
EPA 8260 B	ETHYL METHACRYLATE	NY
EPA 8260 B	HEXACHLOROBUTADIENE (1,3-HEXACHLOROBUTADIENE)	NY
EPA 8260 B	ISOPROPYLBENZENE	NY
EPA 8260 B	METHYL BROMIDE (BROMOMETHANE)	NY
EPA 8260 B	METHYL METHACRYLATE	NY
EPA 8260 B	METHYLENE CHLORIDE (DICHLOROMETHANE)	NY
EPA 8260 B	N-PROPYLBENZENE	NY
EPA 8260 B	O-TOLUIDINE (2-METHYLANILINE)	NY
EPA 8260 B	SEC-BUTYLBENZENE	NY
EPA 8260 B	TERT-BUTYL ALCOHOL	NY
EPA 8260 B	TETRACHLOROETHENE (PERCHLOROETHENE)	NY
EPA 8260 B	TRANS-1,2-DICHLOROETHENE	NY
EPA 8260 B	TRANS-1,4-DICHLORO-2-BUTENE	NY
EPA 8260 B	TRICHLOROFLUOROMETHANE (FLUOROTRICHLOROMETHANE, FREON 11)	NY
EPA 8260 B	VINYL CHLORIDE	NY
EPA 8260 B - EXTENDED	1,1,2-TRICHLORO-1,2,2-TRIFLUOR OETHANE (FREON 113)	NY
EPA 8270 D	1,2,4,5-TETRACHLOROBENZENE	NY
EPA 8270 D	1,2-DICHLOROBENZENE	NY
EPA 8270 D	1,3-DICHLOROBENZENE	NY
EPA 8270 D	1,4-DICHLOROBENZENE	NY
EPA 8270 D	1,4-PHENYLENEDIAMINE	NY
EPA 8270 D	1-NAPHTHYLAMINE	NY
EPA 8270 D	2,4,5-TRICHLOROPHENOL	NY
EPA 8270 D	2,4-DICHLOROPHENOL	NY
EPA 8270 D	2,4-DINITROPHENOL	NY
EPA 8270 D	2,6-DICHLOROPHENOL	NY
EPA 8270 D	2-CHLORONAPHTHALENE	NY

METHOD	ANALYTE	PRIMARY
EPA 8260 B	CHLOROFORM	NY
EPA 8260 B	CIS-1,2-DICHLOROETHYLENE	NY
EPA 8260 B	DIBROMOMETHANE (METHYLENE BROMIDE)	NY
EPA 8260 B	ETHYL ACETATE	NY
EPA 8260 B	ETHYLBENZENE	NY
EPA 8260 B	ISOBUTYL ALCOHOL (2-METHYL-1-PROPANOL)	NY
EPA 8260 B	METHACRYLONITRILE	NY
EPA 8260 B	METHYL CHLORIDE (CHLOROMETHANE)	NY
EPA 8260 B	METHYL TERT-BUTYL ETHER (MTBE)	NY
EPA 8260 B	N-BUTYLBENZENE	NY
EPA 8260 B	NAPHTHALENE	NY
EPA 8260 B	PROPIONITRILE (ETHYL CYANIDE)	NY
EPA 8260 B	STYRENE	NY
EPA 8260 B	TERT-BUTYLBENZENE	NY
EPA 8260 B	TOLUENE	NY
EPA 8260 B	TRANS-1,3-DICHLOROPROPENE	NY
EPA 8260 B	TRICHLOROETHENE (TRICHLOROETHYLENE)	NY
EPA 8260 B	VINYL ACETATE	NY
EPA 8260 B	XYLENE (TOTAL)	NY
EPA 8260 B - EXTENDED	CYCLOHEXANE	NY
EPA 8270 D	1,2,4-TRICHLOROBENZENE	NY
EPA 8270 D	1,3,5-TRINITROBENZENE (1,3,5-TNB)	NY
EPA 8270 D	1,3-DINITROBENZENE (1,3-DNB)	NY
EPA 8270 D	1,4-NAPHTHOQUINONE	NY
EPA 8270 D	1-CHLORONAPHTHALENE	NY
EPA 8270 D	2,3,4,6-TETRACHLOROPHENOL	NY
EPA 8270 D	2,4,6-TRICHLOROPHENOL	NY
EPA 8270 D	2,4-DIMETHYLPHENOL	NY
EPA 8270 D	2,4-DINITROTOLUENE (2,4-DNT)	NY
EPA 8270 D	2,6-DINITROTOLUENE (2,6-DNT)	NY
EPA 8270 D	2-CHLOROPHENOL	NY

Commonwealth of Virginia

Department of General Services
Division of Consolidated Laboratory Services

Scope of Accreditation

VELAP Certificate No.: 2749

ALS ENVIRONMENTAL - ROCHESTER
1565 JEFFERSON ROAD, BUILDING 300, SUITE 300
ROCHESTER, NY 14623

Virginia Laboratory ID: 460167
Effective Date: January 31, 2014
Expiration Date: June 14, 2014

SOLID AND CHEMICAL MATERIALS

METHOD	ANALYTE	PRIMARY
EPA 8270 D	2-METHYL-4,6-DINITROPHENOL (4,6-DINITRO-2-METHYLPHENOL)	NY
EPA 8270 D	2-METHYLPHENOL (O-CRESOL)	NY
EPA 8270 D	2-NITROANILINE	NY
EPA 8270 D	3,3'-DICHLOROBENZIDINE	NY
EPA 8270 D	3-METHYLCHOLANTHRENE	NY
EPA 8270 D	3-NITROANILINE	NY
EPA 8270 D	4-BROMOPHENYL PHENYL ETHER	NY
EPA 8270 D	4-CHLOROANILINE	NY
EPA 8270 D	4-DIMETHYL AMINOAZOBENZENE	NY
EPA 8270 D	4-NITROANILINE	NY
EPA 8270 D	5-CHLORO-2-METHYLANILINE	NY
EPA 8270 D	7,12-DIMETHYLBENZ(A) ANTHRACENE	NY
EPA 8270 D	ACENAPHTHYLENE	NY
EPA 8270 D	ANILINE	NY
EPA 8270 D	ARAMITE	NY
EPA 8270 D	BENZO(A)ANTHRACENE	NY
EPA 8270 D	BENZO(G,H,I)PERYLENE	NY
EPA 8270 D	BENZOIC ACID	NY
EPA 8270 D	BENZYL ALCOHOL	NY
EPA 8270 D	BIS(2-CHLOROETHYL) ETHER	NY
EPA 8270 D	BIS(2-ETHYLHEXYL) PHTHALATE (DI(2-ETHYLHEXYL)PHTHALATE), (DEHP)	NY
EPA 8270 D	CHLOROBENZILATE	NY
EPA 8270 D	DI-N-BUTYL PHTHALATE	NY
EPA 8270 D	DIALLATE	NY
EPA 8270 D	DIBENZOFURAN	NY
EPA 8270 D	DIMETHOATE	NY
EPA 8270 D	DINOSEB (2-SEC-BUTYL-4,6-DINITROPHENOL, DNBP)	NY
EPA 8270 D	DISULFOTON	NY
EPA 8270 D	FLUORANTHENE	NY
EPA 8270 D	HEXACHLOROBENZENE	NY
EPA 8270 D	HEXACHLOROCYCLOPENTADIENE	NY
EPA 8270 D	HEXACHLOROPHENE	NY
EPA 8270 D	INDENO(1,2,3-CD) PYRENE	NY

METHOD	ANALYTE	PRIMARY
EPA 8270 D	2-METHYLNAPHTHALENE	NY
EPA 8270 D	2-NAPHTHYLAMINE	NY
EPA 8270 D	2-NITROPHENOL	NY
EPA 8270 D	3,3'-DIMETHYLBENZIDINE	NY
EPA 8270 D	3-METHYLPHENOL (M-CRESOL)	NY
EPA 8270 D	4-AMINOBIPHENYL	NY
EPA 8270 D	4-CHLORO-3-METHYLPHENOL	NY
EPA 8270 D	4-CHLOROPHENYL PHENYLETHER	NY
EPA 8270 D	4-METHYLPHENOL (P-CRESOL)	NY
EPA 8270 D	4-NITROPHENOL	NY
EPA 8270 D	5-NITRO-O-TOLUIDINE	NY
EPA 8270 D	ACENAPHTHENE	NY
EPA 8270 D	ACETOPHENONE	NY
EPA 8270 D	ANTHRACENE	NY
EPA 8270 D	BENZIDINE	NY
EPA 8270 D	BENZO(A)PYRENE	NY
EPA 8270 D	BENZO(K)FLUORANTHENE	NY
EPA 8270 D	BENZO[B]FLUORANTHENE	NY
EPA 8270 D	BIS(2-CHLOROETHOXY)METHANE	NY
EPA 8270 D	BIS(2-CHLOROISOPROPYL) ETHER	NY
EPA 8270 D	BUTYL BENZYL PHTHALATE	NY
EPA 8270 D	CHRYSENE	NY
EPA 8270 D	DI-N-OCTYL PHTHALATE	NY
EPA 8270 D	DIBENZO(A,H) ANTHRACENE	NY
EPA 8270 D	DIETHYL PHTHALATE	NY
EPA 8270 D	DIMETHYL PHTHALATE	NY
EPA 8270 D	DIPHENYLAMINE	NY
EPA 8270 D	ETHYL METHANESULFONATE	NY
EPA 8270 D	FLUORENE	NY
EPA 8270 D	HEXACHLOROBUTADIENE (1,3-HEXACHLOROBUTADIENE)	NY
EPA 8270 D	HEXACHLOROETHANE	NY
EPA 8270 D	HEXACHLOROPROPENE	NY
EPA 8270 D	ISOPHORONE	NY

Commonwealth of Virginia

Department of General Services
Division of Consolidated Laboratory Services

Scope of Accreditation

VELAP Certificate No.: 2749

ALS ENVIRONMENTAL - ROCHESTER
1565 JEFFERSON ROAD, BUILDING 300, SUITE 300
ROCHESTER, NY 14623

Virginia Laboratory ID: 460167
Effective Date: January 31, 2014
Expiration Date: June 14, 2014

SOLID AND CHEMICAL MATERIALS

METHOD	ANALYTE	PRIMARY
EPA 8270 D	ISOSAFROLE	NY
EPA 8270 D	METHYL METHANESULFONATE	NY
EPA 8270 D	N-NITROSO-DI-N-BUTYLAMINE	NY
EPA 8270 D	N-NITROSODIETHYLAMINE	NY
EPA 8270 D	N-NITROSODIPHENYLAMINE	NY
EPA 8270 D	N-NITROSOMORPHOLINE	NY
EPA 8270 D	N-NITROSOPYRROLIDINE	NY
EPA 8270 D	NITROBENZENE	NY
EPA 8270 D	O,O,O-TRIETHYL PHOSPHOROTHIOATE	NY
EPA 8270 D	PARATHION (PARATHION - ETHYL)	NY
EPA 8270 D	PENTACHLORONITROBENZENE	NY
EPA 8270 D	PHENACETIN	NY
EPA 8270 D	PHENOL	NY
EPA 8270 D	PRONAMIDE (KERB)	NY
EPA 8270 D	SAFROLE	NY
EPA 8270 D - EXTENDED	CARBAZOLE	NY
EPA 9012 A	CYANIDE	NY
EPA 9034	TOTAL SULFIDES	NY
EPA 9045 C	PH	NY
EPA 9056 A	CHLORIDE	NY
EPA 9056 A	NITRATE AS N	NY
EPA 9056 A	SULFATE	NY

METHOD	ANALYTE	PRIMARY
EPA 8270 D	METHAPYRILENE	NY
EPA 8270 D	METHYL PARATHION (PARATHION, METHYL)	NY
EPA 8270 D	N-NITROSODI-N-PROPYLAMINE	NY
EPA 8270 D	N-NITROSODIMETHYLAMINE	NY
EPA 8270 D	N-NITROSOMETHYLETHYLAMINE	NY
EPA 8270 D	N-NITROSOPIPERIDINE	NY
EPA 8270 D	NAPHTHALENE	NY
EPA 8270 D	NITROQUINOLINE-1-OXIDE	NY
EPA 8270 D	O-TOLUIDINE (2-METHYLANILINE)	NY
EPA 8270 D	PENTACHLOROBENZENE	NY
EPA 8270 D	PENTACHLOROPHENOL	NY
EPA 8270 D	PHENANTHRENE	NY
EPA 8270 D	PHORATE	NY
EPA 8270 D	PYRENE	NY
EPA 8270 D	THIONAZIN (ZINOPHOS)	NY
EPA 8270 D - EXTENDED	PYRIDINE	NY
EPA 9030 A	TOTAL SULFIDES	NY
EPA 9040 B	PH	NY
EPA 9056 A	BROMIDE	NY
EPA 9056 A	FLUORIDE	NY
EPA 9056 A	NITRITE	NY
EPA 9066	TOTAL PHENOLICS	NY

Attachment 1
Tier II UFP-SAP Format Approval

From: Dodson, Anita/VBO
Sent: Thursday, August 08, 2013 3:07 PM
To: Ivester, Marlene/VBO
Subject: FW: Tier II SAP request

Hi Marlene,

Please see the email below from Ken Bowers approving a Tier II SAP for the AOC 2 work at CAX. Please keep this email and include it as an appendix in the Tier II SAP.

Thanks,

Anita

-----Original Message-----
From: Bowers, Kenneth A CIV NAVFAC LANT, EV [mailto:kenneth.a.bowers@navy.mil]
Sent: Thursday, August 08, 2013 2:55 PM
To: Dodson, Anita/VBO
Subject: RE: Tier II SAP request

Anita,

Sorry to have not gotten back with you sooner. Yes, I agree with Tier II for this SAP.

v/r

Ken

-----Original Message-----
From: Anita.Dodson@CH2M.com [mailto:Anita.Dodson@CH2M.com]
Sent: Wednesday, August 07, 2013 14:28
To: Bowers, Kenneth A CIV NAVFAC LANT, EV
Cc: Anita.Dodson@CH2M.com
Subject: Tier II SAP request

Hi Ken,

We are seeking approval to prepare a Tier II SAP to support work at AOC 2 at Cheatham Annex. I believe this is a good Tier II candidate, and have attached the questionnaire. Please let me know if you agree, and if you approve of us preparing a Tier II SAP for this work.

Thanks!

Anita Dodson

Chemist

CH2M HILL
5701 Cleveland Street, Suite 200
Virginia Beach, VA, 23462
Direct: 757-671-6218
Fax: 757-497-6885

Regulatory Acceptance

COMMONWEALTH of VIRGINIA

DEPARTMENT OF ENVIRONMENTAL QUALITY
Street address: 629 East Main Street, Richmond, Virginia 23219
Mailing address: P.O. Box 1105, Richmond, Virginia 23218
TDD (804) 698-4021
www.deq.virginia.gov

Molly Joseph Ward
Secretary of Natural Resources

David K. Paylor
Director

(804) 698-4000
1-800-592-5482

April 14, 2014

Mr. Scott Park
NAVFAC MIDLANT, Building N-26
Hampton Roads Restoration Product Line, Code OPHREV4
9742 Maryland Avenue
Norfolk, VA 23511-3095

Draft Tier II Sampling and Analysis Plan
AOC 2 – Dextrose Dump
Naval Weapons Station Yorktown
Cheatham Annex
Williamsburg, Virginia

Dear Mr. Park:

The Virginia Department of Environmental Quality (DEQ) has received the *Draft Tier II Sampling and Analysis Plan* (SAP) for AOC 2 – Dextrose Dump at Naval Weapons Station Yorktown, Cheatham Annex (CAX), Williamsburg, Virginia. The SAP, prepared by CH2M HILL, was received by the DEQ on April 4, 2014.

Thank you for providing the DEQ's Office of Remediation Programs the opportunity to review the above-referenced SAP. Subsequent to DEQ's internal review, this office defers comment on the SAP to the Environmental Protection Agency's (EPA's) Remediation Project Manager for CAX, Mr. Jerry Hoover.

Please contact me at (804) 698-4125 or wade.smith@deq.virginia.gov with any additional questions.

Sincerely,

Wade M. Smith
Remediation Project Manager
Office of Remediation Programs

cc: Jerry Hoover, EPA

UNITED STATES ENVIRONMENTAL PROTECTION AGENCY
REGION III
1650 Arch Street
Philadelphia, Pennsylvania 19103-2029

April 23, 2014

Mr. Scott Park
NAVFAC MIDLANT, Building N-26, Room 3208
Attention: Code OPHE3, Mr. Scott Park
9742 Maryland Avenue
Norfolk, VA 23511-3095

Subject: Draft Tier II Sampling and Analysis Plan (SAP), AOC 2 – Dextrose Dump, Supplemental Soil Sample Collection, Naval Weapons Station Yorktown Cheatham Annex, Williamsburg, Virginia

Mr. Park:

EPA has reviewed the Draft SAP for AOC 2 dated April 2014. EPA has no comments on this document. Please submit a final copy of the subject document for our records.

If you have any questions, please contact me at 215-814-2077.

Sincerely,

Gerald F. Hoover

Gerald F. Hoover, RPM
NPL/BRAC Federal Facilities Branch

cc: Wade Smith, VDEQ