N60201.AR.000448
NS MAYPORT
5090.3a

REMEDIAL ACTION PLAN FOR BUILDINGS 460 AND 1587 NS MAYPORT FL
3/1/1999
HARDING LAWSON ASSOCIATES

REMEDIAL ACTION PLAN

Buildings 460 and 1587

U.S. NAVAL STATION
MAYPORT, FLORIDA

Unit Identification Code: N60201

Contract No: N62467-89-D-0317/119

Prepared by:

Harding Lawson Associates
2590 Executive Center Circle, East
Tallahassee, Florida 32301

Prepared for:

Department of the Navy, Southern Division
Naval Facilities Engineering Command
2155 Eagle Drive
North Charleston, South Carolina 29418

Beverly Washington, Code 1848, Engineer-in-Charge

March 1999

CERTIFICATION OF TECHNICAL
DATA CONFORMITY (MAY 1987)

The Contractor, Harding Lawson Associates, hereby certifies that, to the best of its knowledge and belief, the technical data delivered herewith under Contract No. N62467-89-D-0317/127 are complete and accurate and comply with all requirements of this contract.

DATE: February 9, 1999

NAME AND TITLE OF CERTIFYING OFFICIAL: Lisa Routhier
Task Order Manager

NAME AND TITLE OF CERTIFYING OFFICIAL: Robert Lunardini, P.E.
Project Technical Lead

(DFAR 252.227-7036)

FINAL DRAFT

The engineering design and professional opinions rendered in the set of planning documents that describe Building 460 and Building 1587, Remedial Action Plan, U.S. Naval Station, in Mayport, Florida, were conducted or developed in accordance with commonly accepted procedures consistent with applicable standards of practice. These planning documents are intended to be implemented by Southern Division, Naval Facilities Engineering Command's Response Action Contract Contractor or Comprehensive Long-Term Environmental Action, Navy Contractor. The plan for remediating these sites is based on assessment information collected between May 1995 and January 1998 and engineering detailed in the text and appended to this report. If conditions are determined to exist differently than those described, the undersigned professional engineer should be notified to evaluate the effects of any additional information on the design described in this report.

HARDING LAWSON ASSOCIATES
2590 Executive Center Circle East
Tallahassee, Florida 32301

Robert C. Lunardini, Jr.
Professional Engineer
State of Florida License No.: 46657

Expires: February 28, 2001

2/9/99

MPT-B460.RAP
PMW.02.99

FOREWORD

Subtitle I of the Hazardous and Solid Waste Amendments of 1984 to the Solid Waste Disposal Act (SWDA) of 1965 established a national regulatory program for managing underground storage tanks (USTs) containing hazardous materials, primarily petroleum products. Hazardous wastes stored in USTs were already regulated under the Resource Conservation and Recovery Act of 1976, which was also an amendment of SWDA. Subtitle I requires that the U.S. Environmental Protection Agency (USEPA) promulgate UST regulations. The program was designed to be administered by the individual states, who were allowed to develop more stringent standards, but not less stringent standards. Local governments were permitted to establish regulatory programs and standards that are more stringent, but not less stringent than either State or Federal regulations. The USEPA UST regulations are found in the Code of Federal Regulations (CFR), Title 40, Part 280 (Title 40 CFR 280), *Technical Standards and Corrective Action Requirements for Owners and Operators of Underground Storage Tanks*. Title 40 CFR 280 was revised and published on September 23, 1988, and become effective December 22, 1988.

The Navy's UST program policy is to comply with all Federal, State, and local regulations pertaining to USTs. This report was prepared to satisfy the requirements of Chapter 62-770, Florida Administrative Code, *State Underground Petroleum Environmental Response*, regulations pertaining to petroleum contamination.

Questions regarding this report should be addressed to the Commanding Officer, U.S. Naval Station, in Mayport, Florida, or to Beverly Washington at Southern Division, Naval Facilities Engineering Command, Code 1848 at 843-820-5581.

EXECUTIVE SUMMARY

The purpose of this Remedial Action Plan (RAP) is to present a plan for remediation of petroleum contamination at Buildings 460, the Navy Credit Union, and Building 1587, the Bachelor's Enlisted Quarters, at U.S. Naval Station in Mayport, Florida.

Two underground storage tanks (USTs) formerly stored Number 2 fuel oil that was used to heat Building 460 and supply fuel for an emergency generator. The tanks were excavated on March 24, 1994. Excessively contaminated soil excavated during removal of the tanks was transported off site for thermal treatment. From May 1995 through March 1998, Southern Division, Naval Facilities Engineering Command (SOUTHNAVFACENGCOM) contracted Harding Lawson Associates (HLA) to conduct a site assessment, submit a contamination assessment report (CAR), conduct a supplemental assessment, and submit a CAR addendum.

The estimated volume of contaminated soil at Building 460, to a depth of 5 feet below land surface (bls), is approximately 846 cubic yards (yd^3). The estimated mass of contamination in soil is 6,162 pounds. Chemicals of concern (COCs) in media at Building 460 include benzo(a)anthracene and total recoverable petroleum hydrocarbons (TRPH) in soil; methyl tert-butyl ether in groundwater; and naphthalene, potentially from soil leaching to groundwater.

Remedial alternatives developed in this RAP to reduce soil and groundwater contaminant concentrations at Building 460 to levels below State target cleanup levels include the following:

- vacuum enhanced soil vapor extraction and treatment of soil vapor
- groundwater monitoring for natural attenuation.

Time to clean up soil at Building 460 is estimated to be 5 months.

A 4,000-gallon UST containing Number 2 fuel oil was previously used to heat Building 1587. On March 18, 1994, a subcontractor discovered contaminated soil while attempting to install a cathodic protection system on the UST. The UST was removed on April 27, 1995. Approximately 27 tons of excessively contaminated soil was excavated and transported off site for disposal. A new 4,000-gallon UST and dispensing system was installed in July 1995 and, after tightness testing, became operational in August 1995. From May 1995 through July 1998, HLA was contracted by SOUTHNAVFACENGCOM to conduct a site assessment, submit a CAR, conduct a supplemental assessment, and submit a CAR addendum.

The estimated volume of contaminated soil at Building 1587, to a depth of approximately 8 feet bls, is approximately 25 yd^3. The estimated mass of contamination in soil is 284 pounds. COCs in media at Building 1587 include benzo(a)anthracene and TRPH in soil; benzene in groundwater; and total xylenes and TRPH, potentially from soil leaching to groundwater.

Remedial alternatives developed in this RAP to reduce soil and groundwater contaminant concentrations at Building 1587 to levels below State target cleanup levels include the following:

- excavation of contaminated soil and disposal of soil at a permitted off-site landfill
- groundwater monitoring for natural attenuation.

TABLE OF CONTENTS

Remedial Action Plan
Buildings 460 and 1587
U.S. Naval Station
Mayport, Florida

Chapter	Title	Page No.
1.0	INTRODUCTION	1-1
1.1	PURPOSE	1-1
1.2	SCOPE	1-1
2.0	SITE DESCRIPTION AND BACKGROUND	2-1
2.1	BUILDING 460	2-1
2.1.1	Site History	2-1
2.1.2	Contamination Assessment (CA) and Supplemental Investigation Findings	2-5
2.1.2.1	Soil Borings	2-5
2.1.2.2	Soil Sampling and Analytical Results	2-5
2.1.2.3	Groundwater Sampling and Analytical Results	2-5
2.1.2.4	Groundwater Elevation Survey and Aquifer Characteristics	2-11
2.1.3	Assessment Conclusions	2-17
2.2	BUILDING 1587	2-18
2.2.1	SITE HISTORY	2-18
2.2.2	CA and Supplemental Investigation Findings	2-19
2.2.2.1	Preliminary Contamination Assessment	2-19
2.2.2.2	Soil Borings	2-19
2.2.2.3	Soil Sampling and Analytical Results	2-19
2.2.2.4	Groundwater Sampling and Analytical Results	2-24
2.2.2.5	Groundwater Elevation Survey	2-24
2.2.3	Assessment Conclusions	2-31
3.0	REMEDIAL ALTERNATIVE SELECTION	3-1
3.1	CHEMICALS OF CONCERN	3-1
3.2	CLEANUP CRITERIA	3-1
3.3	REMEDIAL ALTERNATIVES CONSIDERED	3-1
3.4	SELECTION OF REMEDIAL ALTERNATIVES	3-3
3.4.1	Building 460	3-3
3.4.2	Building 1587	3-3
4.0	REMEDIAL DESIGN	4-1
4.1	BUILDING 460: SVE/GROUNDWATER MONITORING	4-1
4.1.1	Technology Description	4-1
4.1.2	System Design	4-1
4.1.2.1	Horizontal VET	4-1
4.1.2.2	Moisture Separator	4-1
4.1.2.3	Blower	4-6
4.1.2.4	Logic Control Panel	4-6
4.1.2.5	Enclosure	4-6
4.1.2.6	Granular Activated Carbon	4-6
4.1.2.7	Utility Requirements	4-6
4.1.2.8	Groundwater Table Sensors	4-7

TABLE OF CONTENTS (Continued)

Remedial Action Plan
Buildings 460 and 1587
U.S. Naval Station
Mayport, Florida

Chapter	Title	Page No.
	4.1.2.9 Air Vent Wells	4-7
4.1.3	System Layout	4-7
4.1.4	Site-Specific Limitations to Remediation	4-7
4.1.5	System Start-up and Reporting	4-9
4.1.6	System Monitoring	4-9
4.1.7	Confirmatory Soil Sampling	4-10
4.1.8	Groundwater Monitoring	4-11
4.1.9	Monitoring Well Locations	4-11
4.1.10	Groundwater Sampling	4-12
4.1.11	Reporting	4-12
4.2	BUILDING 1587: SOIL EXCAVATION AND DISPOSAL/GROUNDWATER MONITORING	4-12
4.2.1	Soil Excavation Boundaries	4-12
4.2.2	Confirmatory Soil Sampling	4-15
4.2.3	Soil Excavation Volume	4-15
4.2.4	Excavation Procedures	4-17
4.2.5	Site-Specific Limitations to Remediation	4-17
4.2.6	Disposal of Excavated Soil	4-17
4.2.7	Site Restoration and Demobilization	4-17
4.2.8	Groundwater Monitoring	4-19
4.2.9	Monitoring Well Locations	4-20
4.2.10	Groundwater Sampling	4-20
4.2.11	Reporting	4-20
5.0	COST ESTIMATE	5-1
6.0	SCHEDULE	6-1
7.0	BUILDING 460 DOCUMENTATION	7-1

REFERENCES

APPENDICES

Appendix A: Correspondence with Florida Department of Environmental Protection
Appendix B: Remedial Alternatives Considered
Appendix C: Engineering Calculations
Appendix D: Basis of Design
Appendix E: Remedial Action Plan Checklist

LIST OF FIGURES

Remedial Action Plan
Buildings 460 and 1587
U.S. Naval Station
Mayport, Florida

Figure	Title	Page No.
2-1	Facility Location Map	2-2
2-2	Location Map, Building 460	2-3
2-3	Location Map, Building 1587	2-4
2-4	Soil Contamination Distribution Map, Building 460	2-6
2-5	Distribution of Petroleum Compounds in Groundwater, Building 460, January 28, 1998	2-15
2-6	Water Table Elevation Contour Map Building 460, January 28, 1998	2-16
2-7	Soil Contamination Distribution Map, Building 1587	2-20
2-8	Distribution of Petroleum Compounds in Groundwater, Building 1587, January 29, 1998	2-27
2-9	Water Table Elevation Contour Map, Building 1587, January 29, 1998	2-30
4-1	Proposed Layout of Vacuum Enhanced Extraction System, Building 460	4-2
4-2	Vacuum Enhanced Extraction System Schematic	4-3
4-3	Piping and Instrumentation Diagram, Building 460	4-4
4-4	Vapor Extraction Trench Detail	4-5
4-5	Vent Pipe and Vapor Observation Probe Detail, Building 460	4-8
4-6	Boundary for Soil Excavation at Building 1587	4-16
4-7	Location of Underground Utilities, Building 1587	4-18

LIST OF TABLES

Remedial Action Plan
Buildings 460 and 1587
U.S. Naval Station
Mayport, Florida

Table	Title	Page No.
2-1	Summary of Soil Sample OVA Results, Building 460, May 1995	2-7
2-2	Soil Sample Analytical Results, Building 460, January 28, 1998	2-9
2-3	Analytical Results of Soil SPLP Samples, Building 460, January 28, 1998	2-10
2-4	Summary of Groundwater Analytical Results, Building 460, June 1, 1995; March 25 and 26, 1996; and January 28, 1998	2-12
2-5	Water Table Elevation Data, Building 460	2-14
2-6	Summary of Soil Sample OVA Results, Building 1587, May and November 1995	2-21
2-7	Soil Sample Analytical Results, Building 1587, January 29, 1998	2-25
2-8	Analytical Results of Soil SPLP Samples, Building 1587, January 29, 1998	2-26
2-9	Summary of Groundwater Analytical Results, Building 1587, May 31, 1995, and January 29, 1998	2-28
2-10	Water Table Elevation Data, Building 1587	2-29
3-1	Chemicals of Concern, Building 460	3-2
3-2	Chemicals of Concern, Building 1587	3-2
4-1	Groundwater Monitoring Parameters, Buildings 460 and 1587	4-13

GLOSSARY

ABB-ES	ABB Environmental Services, Inc.
AST	aboveground storage tank
BEQ	Bachelor Enlisted Quarters
bls	below land surface
°C	degrees Celsius
CA	contamination assessment
CAR	contamination assessment report
CFR	Code of Federal Regulations
cm^2	square centimeters
COC	chemicals of concern
FAC	Florida Administrative Code
FDEP	Florida Department of Environmental Protection
FID	flame ionization detector
FL-PRO	Florida-Petroleum Residual Organics
ft/day	feet per day
ft/ft	feet per foot
ft/yr	feet per year
ft^2	square feet
ft^3/min	cubic feet per minute
GAC	granular activated carbon
GCTL	groundwater cleanup target level
HAP	Hazardous Air Pollutant
HLA	Harding Lawson Associates
IRA	initial remedial action
K	hydraulic conductivity
KAG	kerosene analytical group
LNAPL	light nonaqueous-phase liquid
mg/kg	mg/kgmilligrams per kilogram
MTBE	methyl tert-butyl ether
$\mu g/\ell$	micrograms per liter
NAVSTA	Naval Station
NFA	no further action
O&M	operations and maintenance
OVA	organic vapor analyzer
ppb	parts per billion
ppm	parts per million
PAH	polynuclear aromatic hydrocarbons
lbs/day	pounds per day
PVC	polyvinyl chloride

GLOSSARY (Continued)

RAP	remedial action plan
scfm	standard cubic feet per minute
SCTL	soil cleanup target level
SVE	soil vapor extraction
SOUTHNAV-FACENGCOM	Southern Division, Naval Facilities Engineering Command
SPLP	Synthetic Precipitation Leaching Procedure
TCAR	tank closure assessment report
TCLP	toxicity characteristic leaching procedure
TOC	top of casing
TRPH	total recoverable petroleum hydrocarbons
USEPA	U.S. Environmental Protection Agency
UST	underground storage tank
V	velocity
VET	vapor extraction trench
VOC	volatile organic compound
yd^3	cubic yard

1.0 INTRODUCTION

A Contamination Assessment Report (CAR) for Building 460 and a CAR for Building 1587 at U.S. Naval Station (NAVSTA) in Mayport, Florida, were submitted by Harding Lawson Associates (HLA) in February 1996 to Southern Division, Naval Facilities Engineering Command (SOUTHNAVFACENGCOM). Subsequently, additional sampling was conducted at Buildings 460 and 1587 in response to Florida Department of Environmental Protection's (FDEP) comments on the CAR reports, and in consideration of revisions to Chapter 62-770, Florida Administrative Code (FAC) (effective September 23, 1997). Results of the supplemental assessments were documented in CAR Addenda for Building 460 and Building 1587 and submitted by HLA in March and July 1998, respectively, to SOUTHNAVFACENGCOM. After approval of the CAR Addenda by FDEP, HLA was authorized by SOUTHNAVFACENGCOM to develop a remedial action plan (RAP) for Buildings 460 and 1587. This work is being performed under Contract Task Order No. 119 of the Comprehensive Long-Term Environmental Action, Navy contract.

1.1 **PURPOSE**. The purpose of this RAP is to present a plan for remediation of petroleum-contaminated soil exceeding State Soil Cleanup Target Levels (SCTLs) (Tonner-Navarro and Roberts, 1998) at Buildings 460 and 1587 at NAVSTA Mayport. The implementation of this RAP is designed to bring Buildings 460 and 1587 into compliance with the requirements of Chapter 62-770, FAC.

1.2 **SCOPE**. This RAP presents the rationale for the remedial actions to be implemented at Buildings 460 and 1587. Implementation of remedial actions described herein will include the tasks listed below.

Building 460

- Vacuum enhanced soil vapor extraction (SVE) and treatment of soil vapor
- Groundwater monitoring for natural attenuation

Building 1587

- Excavation of contaminated soil and disposal of soil at a permitted off-site landfill
- Groundwater monitoring for natural attenuation

2.0 SITE DESCRIPTION AND BACKGROUND

NAVSTA Mayport is located approximately 15 miles east-northeast of downtown Jacksonville, Florida (Figure 2-1). NAVSTA Mayport was established in 1942 on approximately 700 acres of land. The original mission of the station included use of patrol craft, target boats, and rescue boats. The station was placed in caretaker status in 1946, reopened in 1948, and in 1952 was assigned an aircraft carrier. Today NAVSTA Mayport is primarily involved in intermediate level maintenance of equipment, ships, aircraft, and other support units assigned to that part of the Second Fleet stationed at the facility.

Building 460 is located in the northeast section of NAVSTA Mayport, southeast of the Turning Basin, near the intersection of Massey Avenue and Bon Homme Richard Street (Figure 2-2). It houses the Navy Credit Union on the west end and classrooms and a library on the east end.

The Bachelor Enlisted Quarters (BEQ), Building 1587, is located in the northeast section of NAVSTA Mayport, east of the Turning Basin, at the west end of Biltmore Avenue near the intersection of Baltimore Street and Bailey Avenue (Figure 2-3).

2.1 BUILDING 460

2.1.1 Site History Two underground storage tanks (USTs) formerly contained Number 2 fuel oil that was used to heat Building 460 and supply fuel for an emergency generator. According to base personnel, a release of an unknown amount of fuel occurred as a result of tank corrosion. Tanks 460 and 460G were subsequently excavated by V & W Construction & Services Company on March 24, 1994. Excessively contaminated soil (as defined in Chapter 62-770, FAC) and free product were discovered in the excavation pit during removal of the tanks. An initial remedial action (IRA) was conducted, which involved removal of approximately 300 tons of excessively contaminated soil from the excavation area. The excavated soil was transported to Kedesh Soils & Asphalt in Kingsland, Georgia, for thermal treatment (ABB Environmental Services, Inc. [ABB-ES], 1996a).

Subsequently, HLA was contracted by SOUTHNAVFACENGCOM to conduct a site assessment at Building 460, in accordance with the requirements of Chapter 62-770, FAC (effective February 21, 1990). The site assessment was conducted from May to October 1995, and a CAR was submitted to SOUTHNAVFACENGCOM in February 1996. The purpose of the assessment was to characterize the nature and extent of petroleum contamination in subsurface soil and groundwater. Tasks included in the assessment of Building 460 included soil sample screening, groundwater monitoring well installation and sampling, free-product assessment, a potable well survey, and a groundwater elevation survey. Based on results of the assessment, a monitoring only proposal for petroleum-contaminated groundwater at the site and remediation of excessively contaminated soil by natural attenuation (biodegradation) was recommended in the CAR.

In response to FDEP comments on the CAR, and in consideration of revisions to Chapter 62-770, FAC (effective September 23, 1997), a supplemental assessment of Building 460 was conducted. The supplemental contamination assessment was

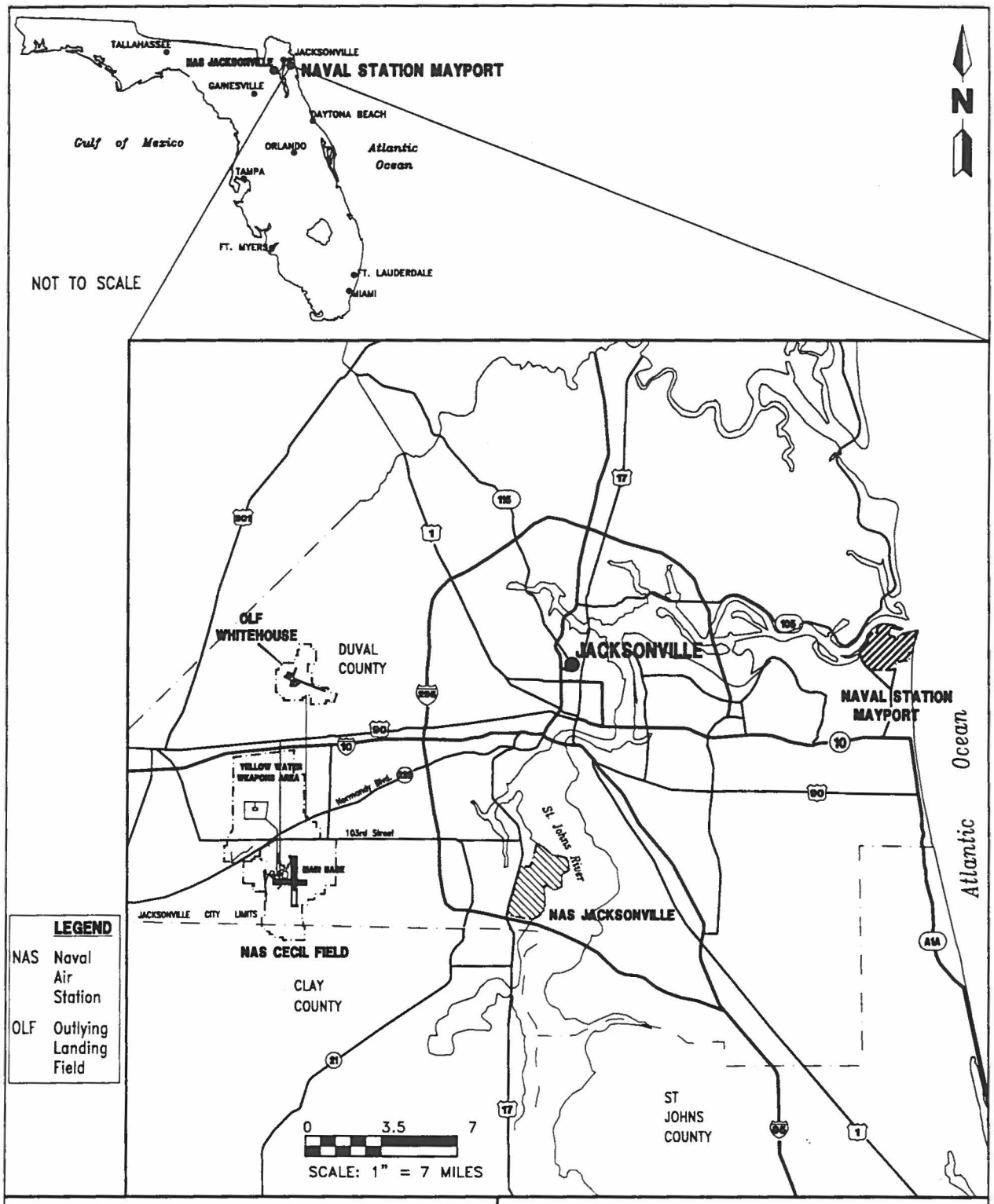

FIGURE 2-1
FACILITY LOCATION MAP

K:\02536\02536-16\RAP\02536510.DWG, SM-VC 12/29/98 08:18:27, AutoCAD R14

REMEDIAL ACTION PLAN
BUILDINGS 460 AND 1587

U.S. NAVAL STATION
MAYPORT, FLORIDA

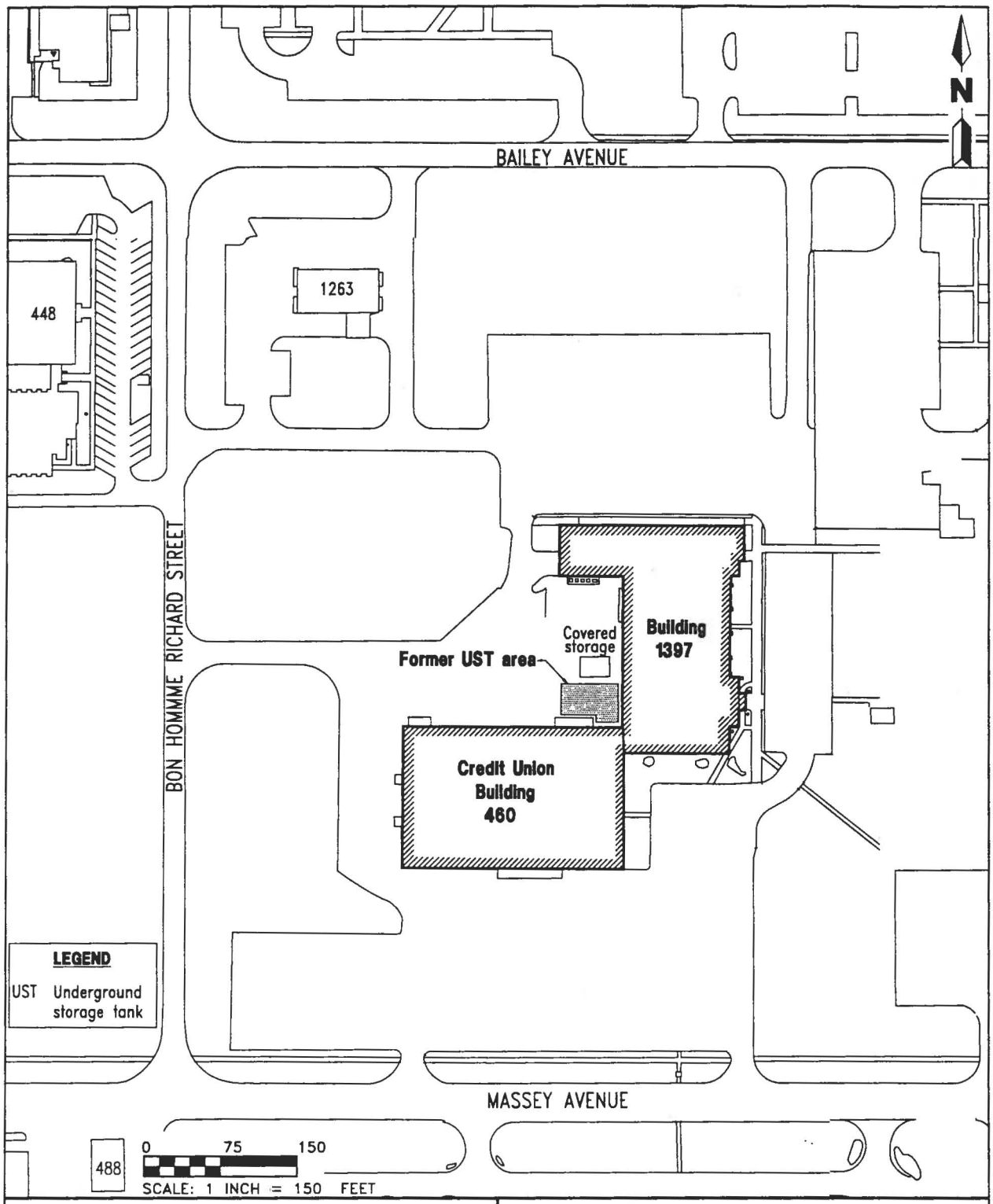

FIGURE 2-2
LOCATION MAP
BUILDING 460

K:\02536\02536-16\RAP\02536511.DWG, SM-VC 12/29/98 08:22:29, AutoCAD R14

REMEDIAL ACTION PLAN
BUILDINGS 460 AND 1587

U.S. NAVAL STATION
MAYPORT, FLORIDA

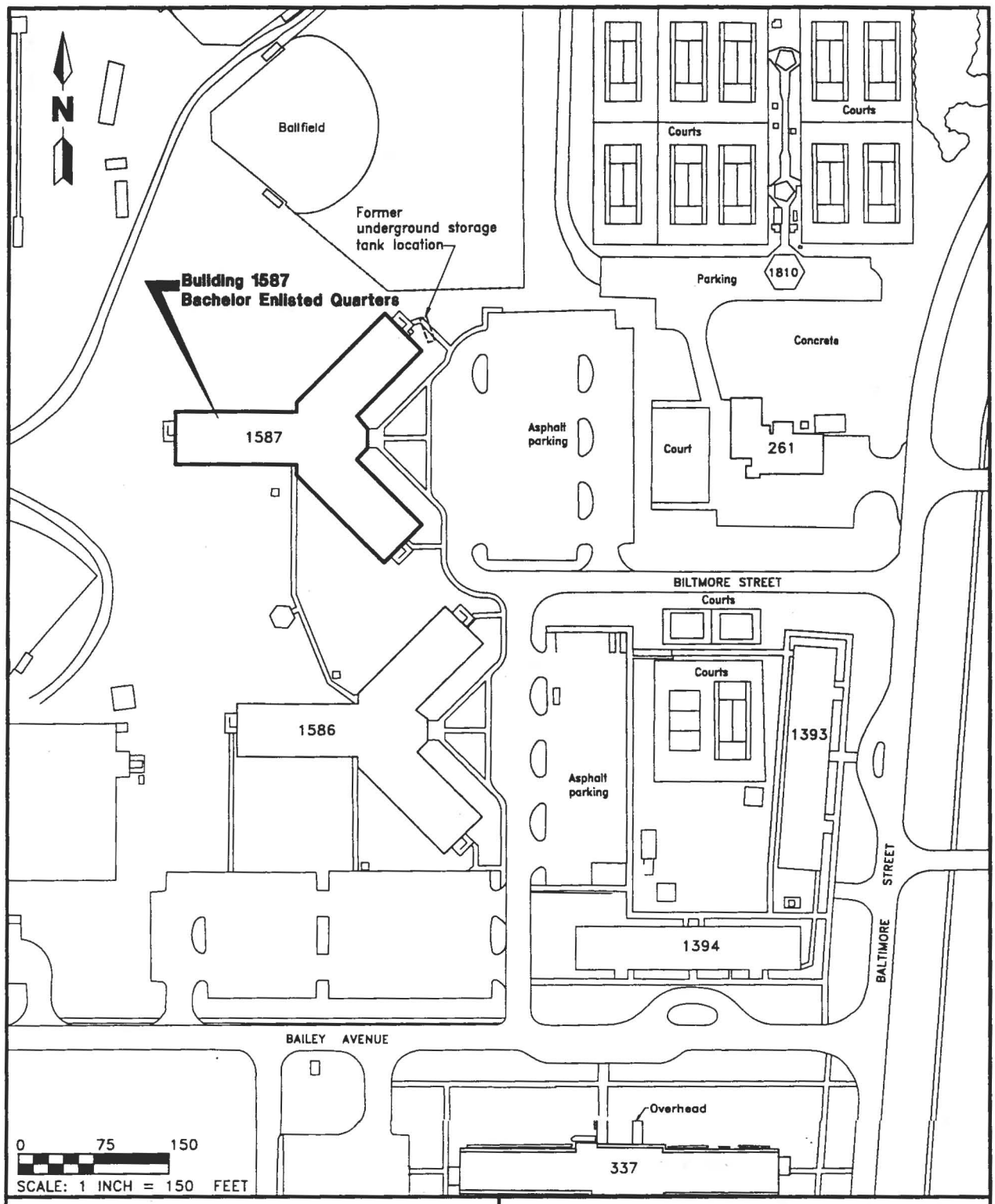

FIGURE 2-3
LOCATION MAP
BUILDING 1587

K:\02536\02536-16\RAP\02536512.DWG, SM-VC 12/29/98 08:54:29, AutoCAD R14

REMEDIAL ACTION PLAN
BUILDINGS 460 AND 1587

U.S. NAVAL STATION
MAYPORT, FLORIDA

performed on January 28, 1998, and involved soil and groundwater sampling and analysis, and a groundwater elevation survey. Results of the supplemental assessment were documented in a CAR Addendum submitted to SOUTHNAVFACENGCOM in March 1998 (HLA, 1998a). No further action (NFA) without conditions or restrictions (Chapter 62-770.680[1], FAC) was proposed in the CAR Addendum for Building 460. FDEP reviewed the document and requested an RAP to address soil contamination at the site.

2.1.2 Contamination Assessment (CA) and Supplemental Investigation Findings

This subsection presents a summary of findings based on the CA and the supplemental assessment (documented in the CAR Addendum) conducted for Building 460.

2.1.2.1 **Soil Borings** To verify the extent of soil contamination in the vicinity of the former USTs at Building 460, 17 soil borings were advanced to the water table (approximately 4 to 6 feet below land surface [bls]) during the CA in May and October 1995. Soil samples were collected at 1 foot vertical intervals and screened with an organic vapor analyzer (OVA) equipped with a flame ionization detector (FID) to assess concentrations of volatile organic compounds (VOCs) in the unsaturated zone surrounding the former USTs. The locations of the soil borings are shown on Figure 2-4. Results of the OVA screening for soil borings SB-1 through SB-17 are presented in Table 2-1.

2.1.2.2 **Soil Sampling and Analytical Results** As part of the supplemental assessment of Building 460, three soil samples were collected and analyzed for the following Kerosene Analytical Group (KAG) chemicals of concern (COC), specified in Chapter 62-770, FAC, Table I: VOCs including methyl tert-butyl ether (MTBE) (U.S. Environmental Protection Agency [USEPA] Method 8020); polynuclear aromatic hydrocarbons (PAHs) (USEPA Method 8310); and total recoverable petroleum hydrocarbons (TRPH) (Florida-Petroleum Residual Organics [FL-PRO] method). To assess the potential for contaminants in soil to leach to groundwater, soil samples were analyzed by the synthetic precipitation leaching procedure (SPLP) (USEPA Method 1312 followed by the same group of parameters). The soil grab samples were collected on January 28, 1998, from areas of high, medium, and low OVA headspace readings (based on the 1995 OVA results) in order to verify petroleum contamination in the unsaturated zone, in accordance with Chapter 62-770.600, FAC (effective September 23, 1997).

The soil samples were collected from locations adjacent to soil borings SB-2, SB-6, and SB-13 at a depth approximately 0.5 feet above the water table (4 feet bls). Soil sample and SPLP analytical results are summarized in Tables 2-2 and 2-3, respectively. The compounds included in each table are those detected in one or more of the samples. A summary of the compounds detected at each sample location is also presented on Figure 2-4. The estimated limit of contaminated soil at Building 460 (based on both OVA screening and analytical data) is shown on Figure 2-4.

2.1.2.3 **Groundwater Sampling and Analytical Results** The horizontal and vertical extent of the groundwater contaminant plume were characterized by installing seven shallow monitoring wells and one deep monitoring well MPT-CU-MW01 through MTT-CU-MW08D (MW-01 through MW-08D). Groundwater samples were collected from these wells during May and June 1995. The groundwater samples were analyzed for the following KAG chemicals, specified in Chapter 62-770, FAC, Table I: VOCs including MTBE (USEPA Method 602); PAHs (USEPA Method 610); ethylene dibromide

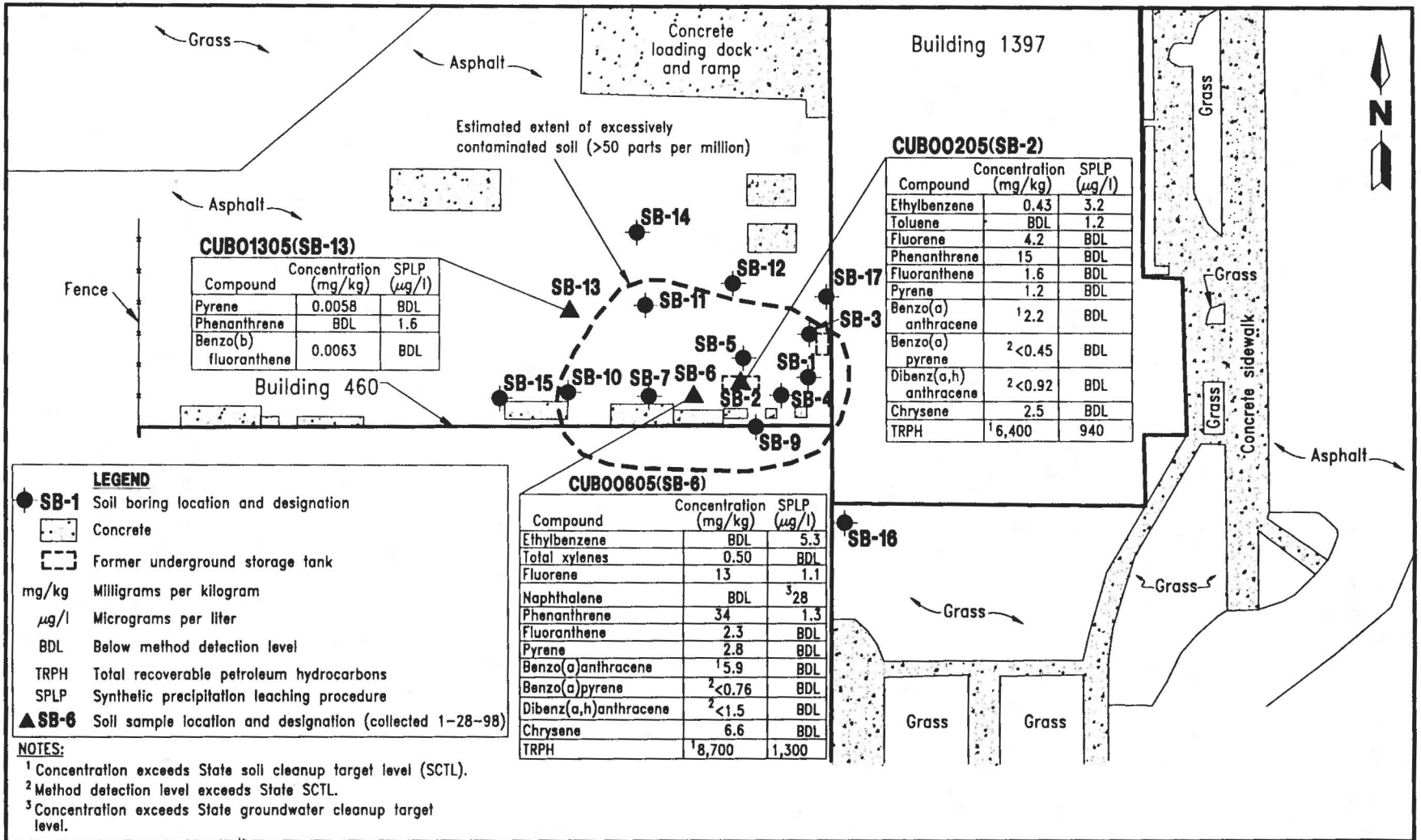

CUB01305(SB-13)

Compound	Concentration (mg/kg)	SPLP (µg/l)
Pyrene	0.0058	BDL
Phenanthrene	BDL	1.6
Benzo(b) fluoranthene	0.0063	BDL

CUB00205(SB-2)

Compound	Concentration (mg/kg)	SPLP (µg/l)
Ethylbenzene	0.43	3.2
Toluene	BDL	1.2
Fluorene	4.2	BDL
Phenanthrene	15	BDL
Fluoranthene	1.6	BDL
Pyrene	1.2	BDL
Benzo(a) anthracene	[1]2.2	BDL
Benzo(a) pyrene	[2]<0.45	BDL
Dibenz(a,h) anthracene	[2]<0.92	BDL
Chrysene	2.5	BDL
TRPH	[1]6,400	940

CUB00605(SB-6)

Compound	Concentration (mg/kg)	SPLP (µg/l)
Ethylbenzene	BDL	5.3
Total xylenes	0.50	BDL
Fluorene	13	1.1
Naphthalene	BDL	[3]28
Phenanthrene	34	1.3
Fluoranthene	2.3	BDL
Pyrene	2.8	BDL
Benzo(a)anthracene	[1]5.9	BDL
Benzo(a)pyrene	[2]<0.76	BDL
Dibenz(a,h)anthracene	[2]<1.5	BDL
Chrysene	6.6	BDL
TRPH	[1]8,700	1,300

LEGEND

- SB-1 Soil boring location and designation
- Concrete
- Former underground storage tank
- mg/kg Milligrams per kilogram
- µg/l Micrograms per liter
- BDL Below method detection level
- TRPH Total recoverable petroleum hydrocarbons
- SPLP Synthetic precipitation leaching procedure
- ▲SB-6 Soil sample location and designation (collected 1-28-98)

NOTES:
[1] Concentration exceeds State soil cleanup target level (SCTL).
[2] Method detection level exceeds State SCTL.
[3] Concentration exceeds State groundwater cleanup target level.

0 25 50
SCALE: 1 INCH = 50 FEET

K:\02536\02536-18\RAP\02536515.DWG, VC-VC 02/09/99 08:42:04, AutoCAD R14

FIGURE 2-4
SOIL CONTAMINATION DISTRIBUTION MAP
BUILDING 460

REMEDIAL ACTION PLAN
BUILDINGS 460 AND 1587

U.S. NAVAL STATION
MAYPORT, FLORIDA

Table 2-1
Summary of Soil Sample OVA Results, Building 460, May 1995

Remedial Action Plan
Buildings 460 and 1587
U.S. Naval Station
Mayport, Florida

Boring Number	Depth (feet bls)	Unfiltered Concentration	Filtered Concentration	Corrected Concentration	Comments
SB-1	3.0 to 3.5	4	0	4	
	4.5 to 5.0	>5000	0	>5000	damp
	6.0 to 6.5	2400	0	2400	damp
SB-2	2.0 to 2.5	1600	0	1600	
	3.5 to 4.0	3100	0	3100	
	5.0 to 5.5	>5000	0	>5000	damp
	6.0 to 6.5	>5000	0	>5000	damp
SB-3	2.5 to 3.0	0	--	0	
	4.0 to 4.5	220	0	220	
	5.5 to 6.0	250	0	250	wet
SB-4	1.5 to 2.0	700	0	700	
	3.0 to 3.5	700	0	700	
	4.5 to 5.0	2000	0	2000	
SB-5	2.5 to 3.0	1500	0	1500	
	4.0 to 4.5	150	0	150	
	5.5 to 6.0	1900	0	1900	
SB-6	2.5 to 3.0	440	0	440	
	4.0 to 4.5	2200	0	2200	
	5.5 to 6.0	2600	0	2600	wet
SB-7	3.0 to 3.5	3000	0	3000	
	4.5 to 5.0	4300	0	4300	
	6.0 to 6.5	5000	0	5000	wet
SB-8	2.5 to 3.0	90	0	90	
	4.5 to 5.0	2400	0	2400	
SB-9	2.5 to 3.0	900	0	900	
	4.0 to 4.5	>5000	0	>5000	
	5.0 to 5.5	>5000	0	>5000	damp
SB-10	2.5 to 3.0	17	0	17	
	4.0 to 4.5	65	0	65	
	5.0 to 5.5	50	0	50	damp
SB-11	2.5 to 3.0	1	0	1	
	4.0 to 4.5	150	0	150	
	5.0 to 5.5	800	0	800	damp
SB-12	2.5 to 3.0	0	--	0	
	4.0 to 4.5	5	0	5	
	4.5 to 5.0	10	0	10	damp
SB-13	2.5 to 3.0	0	--	0	
	3.75 to 4.25	0	--	0	
	4.5 to 4.75	0	--	0	damp
SB-14	2.5 to 3.0	0	--	0	
	3.75 to 4.25	0	--	0	
	4.5 to 4.75	0	--	0	damp

See notes at end of table.

Table 2-1 (Continued)
Summary of Soil Sample OVA Results, Building 460, May 1995

Remedial Action Plan
Buildings 460 and 1587
U.S. Naval Station
Mayport, Florida

Boring Number	Depth (feet bls)	Unfiltered Concentration	Filtered Concentration	Corrected Concentration	Comments
SB-15	2.5 to 3.0	0	--	0	
	3.5 to 4.0	0	--	0	
	4.0 to 4.5	0	--	0	damp
SB-16	2.5 to 3.0	0	--	0	
	4.0 to 4.5	0	--	0	
SB-17	2.5 to 3.0	0	--	0	
	4.0 to 4.5	3	0	0	
	5.0 to 5.5	6	0	0	

Notes: Concentrations are reported in parts per million.

OVA = organic vapor analyzer.
bls = below land surface.
> = greater than.
-- = no OVA reading.

Table 2-2
Soil Sample Analytical Results, Building 460,
January 28, 1998

Remedial Action Plan
Buildings 460 and 1587
U.S. Naval Station
Mayport, Florida

Contaminant	Soil Boring, Sample Identifier, and OVA Headspace Reading			State SCTLs[1]
	SB-2 CUB00205 (300 ppm)	SB-6 CUB00605 (205 ppm)	SB-13 CUB01305 (0 ppm)	
Purgeable Aromatic Hydrocarbons (USEPA Method 8002) (mg/kg)				
Ethylbenzene	0.43	<0.14	<0.0016	240
Xylenes, total	<0.44	0.50	<0.0032	290
Polynuclear Aromatic Hydrocarbons (USEPA Method 8310) (mg/kg)				
Fluorene	4.2	13	<0.011	2,100
Phenanthrene	15	34	<0.011	1,900
Fluoranthene	1.6	2.3	<0.0054	2,800
Pyrene	1.2	2.8	0.0058	2,200
Benzo(a)anthracene	[2]2.2	[2]5.9	<0.0054	1.4
Benzo(b)fluoranthene	<0.45	<0.76	0.0063	1.4
Benzo(a)pyrene	[3]<0.45	[3]<0.76	<0.0054	0.1
Dibenz(a,h,)anthracene	[3]<0.92	[3]<1.5	<0.011	0.1
Chrysene	2.5	6.6	<0.0054	140
Total Recoverable Petroleum Hydrocarbons [TRPH] (FL-PRO Method) (mg/kg)				
TRPH	[2]6,400	[2]8,700	<6.3	350

[1] Chapter 62-770, Florida Administrative Code, Table IV, Direct Exposure I.
[2] Concentration equals or exceeds State SCTL.
[3] Method detection level exceeds State SCTL.

Notes: Values in parentheses represent corrected OVA readings of soil sample in ppm.

OVA = organic vapor analyzer.
SCTL = soil cleanup target level (Chapter 62-770, Florida Administrative Code); Table IV, Soil Cleanup Target Levels: Direct Exposure I.
ppm = parts per million.
USEPA = U.S. Environmental Protection Agency.
mg/kg = milligrams per kilogram.
< = less than.
FL-PRO = Florida-Petroleum Residual Organics.

Table 2-3
Analytical Results of Soil SPLP Samples, Building 460, January 28, 1998

Remedial Action Plan
Buildings 460 and 1587
U. S. Naval Station
Mayport, Florida

Contaminant	Soil Boring, Sample Identifier, and OVA Headspace Concentration			State GCTLs[1]
	SB-2 CUB00205L (300 ppm)	SB-6 CUB00605L (205 ppm)	SB-13 CUB01305L (0 ppm)	
Purgeable Aromatic Hydrocarbons (USEPA Method 602, modified) (µg/ℓ)				
Toluene	1.2	<1	<1	40
Ethylbenzene	3.2	5.3	<1	30
Xylenes, total	3.4	<2	<2	20
Polynuclear Aromatic Hydrocarbons (USEPA Method 8310) (µg/ℓ)				
Naphthalene	<10	[2]28	10	20
Fluorene	<1	1.1	<1	280
Phenanthrene	<1	1.3	1.6	210
Total Recoverable Petroleum Hydrocarbons [TRPH] (FL-PRO Method) (µg/ℓ)				
TRPH	940	1,300	NA	5,000

[1] Chapter 62-770, Florida Administrative Code (FAC), Table V.
[2] Concentration exceeds State GCTLs.

Notes: Values in parentheses represent corrected OVA readings of soil sample in ppm.

SPLP = synthetic precipitation leaching procedure.
OVA = organic vapor analyzer.
ppm = parts per million.
GCTL = groundwater cleanup target level (Chapter 62-770, FAC); Table V, Groundwater Cleanup Target Levels for Resource Protection/Recovery.
USEPA = U.S. Environmental Protection Agency.
µg/ℓ = micrograms per liter.
< = less than.
FL-PRO = Florida-Petroleum Residual Organics.
NA = not analyzed.

(USEPA Method 504.1); lead (USEPA Method 239.2); and TRPH (FL-PRO method). The highest levels of groundwater contamination were detected in the sample obtained from MW04, located within the former boundary of a UST.

Concentrations of benzene and MTBE exceeded the NFA target level of 1 microgram per liter ($\mu g/\ell$) and 50 $\mu g/\ell$, respectively. Results of the June 1, 1995, groundwater sampling event were documented in the CAR for Building 460 (ABB-ES, 1996a).

The FDEP reviewed the CAR for Building 460 and requested in a letter dated March 1, 1996 that the eight monitoring wells at Building 460 be resampled to gather current groundwater data for the site (Appendix A). Groundwater samples were collected on March 25 and 26, 1996, and analyzed for the KAG parameters. The March 1996 groundwater analytical results (as well as the analytical data from June 1995) were included in a letter report from HLA to FDEP dated June 7, 1996 (Appendix A). The highest contaminant levels were detected in groundwater samples collected from MW-04. Contaminant concentrations in MW-02, MW-05, MW-06, and MW-07 were below detection levels for all compounds analyzed in both the June 1995 and March 1996 sampling events. Although low concentrations of VOCs were detected in MW-01 and MW-08D in June 1995, no target analytes, if present, were detected in the samples collected from those monitoring wells in March 1996.

Groundwater samples were collected from MW-03 (a source area well) and MW-04 (a downgradient well) during the supplemental assessment of Building 460 on January 28, 1998. These samples were collected to confirm the analytical results from samples analyzed in 1995 and 1996, and to determine whether or not contaminants were migrating downgradient. The samples were analyzed for VOCs and PAHs (USEPA Methods 602 and 8310) only, because no other petroleum COC were detected in the June 1995 and March 1996 groundwater samples. A summary of groundwater analytical results is presented in Table 2-4. Monitoring well locations and groundwater analytical results from the January 28, 1998, sampling event are shown on Figure 2-5.

2.1.2.4 **Groundwater Elevation Survey and Aquifer Characteristics** Depth-to-groundwater measurements were collected as part of the CA for Building 460 on June 1, 1995, and September 1, 1995, using an electronic water-level indicator. Water table elevations were calculated by correlating the top-of-casing (TOC) elevations for each monitoring well to a common datum (National Geodetic Vertical Datum of 1927). A third round of depth-to-groundwater measurements was collected during the supplemental assessment on January 28, 1998. Free product was not observed in any site monitoring wells during the assessment. Depth-to-water, TOC, and water table elevation data for each gauging event are presented in Table 2-5. The depth to water at Building 460 varies from approximately 3 to 5 feet bls. A water table elevation contour map for Building 460 (based on the January 28, 1998, measurements) is shown on Figure 2-6.

Based on water table elevations measured in June 1, 1995, the groundwater flow direction at Building 460 is toward the northeast, with an average hydraulic gradient of 0.0006 feet per foot (ft/ft). The January 28, 1998, water table elevation data indicate a north-northeast groundwater flow direction and an average hydraulic gradient of 0.0017 ft/ft, showing general consistency with the June 1, 1995, results.

Table 2-4
Summary of Groundwater Analytical Results, Building 460,
June 1, 1995; March 25 and 26, 1996; and January 28, 1998

Remedial Action Plan
Buildings 460 and 1587
U.S. Naval Station
Mayport, Florida

Contaminant	Well Identification (MPT-CU-)												State Target Level[1]
	MW01 6/1/95	MW02 6/1/95	MW03 6/1/95	MW03 3/26/96	MW03 1/28/98	MW04 6/1/95	MW04 3/25/96	MW04 1/28/98	MW05 6/1/95	MW06 6/1/95	MW07 6/1/95	MW08D 6/1/95	
Volatile Organic Compounds (USEPA Method 601/602) (µg/ℓ)													
Benzene	ND	ND	1.9	ND	ND	[2]18	[2,3]2	ND	NS	ND	ND	ND	1
Toluene	ND	ND	ND	ND	ND	ND	ND	ND	NS	ND	ND	1.2	40
Ethylbenzene	ND	ND	ND	ND	ND	[3]30	[3]4.5	ND	NS	ND	ND	ND	30
Xylenes, total	1.1	ND	ND	ND	ND	ND	ND	ND	NS	ND	ND	3.9	20
Total VOAs	1.1	ND	1.9	ND	ND	[3]48	[3]6.5	ND	NS	ND	ND	5.1	NA
Methyl tert-butyl ether	ND	ND	12	ND	4.1	[2,3]240	[2,3]44	[2]36	ND	ND	ND	ND	35
Polynuclear Aromatic Hydrocarbons (PAHs) (USEPA Method 610) (µg/ℓ)													
Total naphthalenes	ND	ND	ND	ND	ND	16	[3]34	NA	ND	NS	ND	ND	NA
Total PAHs (excluding naphthalenes)	ND	ND	ND	ND	ND	[3]2.9	[3]11.7	NA	ND	NS	ND	ND	NA
Naphthalene	NS	NS	NA	NA	ND	NA	NA	17	NS	NS	NS	NS	20
Acenaphthene	NS	NS	NA	NA	ND	NA	NA	2.7	NS	NS	NS	NS	20
Fluorene	NS	NS	NA	NA	0.21	NA	NA	2.7	NS	NS	NS	NS	280
Phenanthrene	NS	NS	NA	NA	ND	NA	NA	4.8	NS	NS	NS	NS	210
Anthracene	NS	NS	NA	NA	ND	NA	NA	0.7	NS	NS	NS	NS	2,100
Fluoranthene	NS	NS	NA	NA	ND	NA	NA	0.83	NS	NS	NS	NS	280
Pyrene	NS	NS	NA	NA	ND	NA	NA	0.28	NS	NS	NS	NS	210
Benzo(a)anthracene	NS	NS	NA	NA	ND	NA	NA	0.13	NS	NS	NS	NS	0.2
Total Recoverable Petroleum Hydrocarbons (TRPH) (USEPA Method 418.1) (mg/ℓ)													
TRPH	ND	ND	[4]NS	ND	NS	ND	ND	NS	ND	ND	ND	ND	5

See notes at end of table.

Table 2-4 (Continued)
Summary of Groundwater Analytical Results, Building 460, June 1, 1995; March 25 and 26, 1996; and January 28, 1998

Remedial Action Plan
Buildings 460 and 1587
U.S. Naval Station
Mayport, Florida

Contaminant	Well Identification (MPT-CU-)												State Target Level[1]
	MW01 6/1/95	MW02 6/1/95	MW03 6/1/95	MW03 3/26/96	MW03 1/28/98	MW04 6/1/95	MW04 3/25/96	MW0O4 1/28/98	MW05 6/1/95	MW06 6/1/95	MW07 6/1/95	MW08D 6/1/95	
Ethylene Dibromide (EDB) (USEPA 601), ppb													
EDB	ND	ND	NS	NS	NS	NS	NS	NS	ND	ND	ND	ND	NS
Metals (USEPA Method 239.2) ppb													
Lead, unfiltered	ND	ND	NS	NS	NS	NS	NS	NS	ND	ND	ND	ND	NS

[1] Chapter 62-770, Florida Administrative Code, Table V, Groundwater Cleanup Target Levels for Resource Protection/Recovery (September 23, 1997).
[2] Concentration equals or exceeds State GCTL.
[3] Concentration of duplicate sample.
[4] Sample bottle was broken during laboratory analysis.

Notes: GCTL = groundwater cleanup target level.
USEPA = U.S. Environmental Protection Agency.
$\mu g/\ell$ = micrograms per liter.
ND = not detected.
Total VOAs = total volatile organic aromatics (the sum of benzene, toluene, ethylbenzene, and xylenes).
NA = not applicable.
mg/ℓ = milligrams per liter.
NS = not sampled.

Table 2-5
Water Table Elevation Data, Building 460

Remedial Action Plan
Buildings 460 and 1587
Naval Air Station Mayport
Mayport, Florida

Monitoring Well Number	Total Well Depth (feet bls)	Screened Interval (feet bls)	TOC Elevation (feet msl)	June 1, 1995		September 1, 1995		January 28, 1998	
				Depth to Water (feet BTOC)	Water-Level Elevation (feet msl)	Depth to Water (feet BTOC)	Water-Level Elevation (feet msl)	Depth to Water (feet BTOC)	Water-Level Elevation (feet msl)
MPT-CU-MW01	13.0	3.0 to 13.0	11.28	4.98	6.30	2.35	8.93	4.31	6.97
MPT-CU-MW02	13.0	3.0 to 13.0	11.28	4.95	6.33	2.35	8.93	4.29	6.99
MPT-CU-MW03	13.0	3.0 to 13.0	11.29	5.03	6.26	2.41	8.88	4.39	6.90
MPT-CU-MW04	13.0	3.0 to 13.0	11.54	5.24	6.30	2.62	8.92	4.57	6.97
MPT-CU-MW05	13.0	3.0 to 13.0	11.71	5.43	6.28	2.77	8.94	4.90	6.81
MPT-CU-MW06	13.0	3.0 to 13.0	11.05	4.83	6.22	2.22	8.83	NM	NM
MPT-CU-MW07	13.0	3.0 to 13.0	11.33	5.02	6.31	2.40	8.93	4.38	6.95
MPT-CUMW08D	30.0	25.0 to 30.0	11.37	5.10	6.27	2.47	8.90	NM	NM

Notes: bls = below land surface.
TOC = top-of-casing.
msl = mean sea level.
BTOC = below top of casing.
NM = not measured.
D = deep monitoring well.

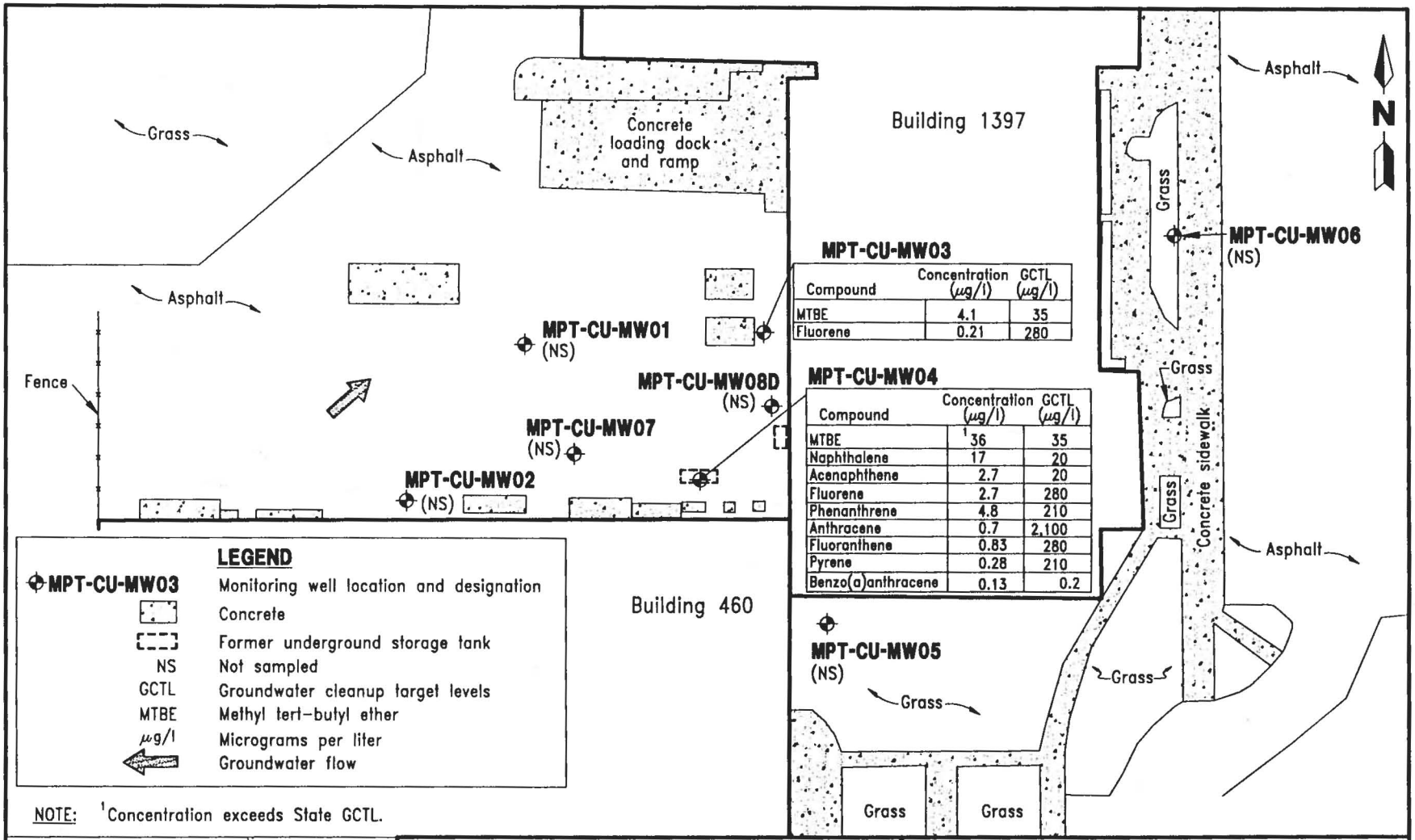

MPT-CU-MW03

Compound	Concentration (µg/l)	GCTL (µg/l)
MTBE	4.1	35
Fluorene	0.21	280

MPT-CU-MW04

Compound	Concentration (µg/l)	GCTL (µg/l)
MTBE	[1]36	35
Naphthalene	17	20
Acenaphthene	2.7	20
Fluorene	2.7	280
Phenanthrene	4.8	210
Anthracene	0.7	2,100
Fluoranthene	0.83	280
Pyrene	0.28	210
Benzo(a)anthracene	0.13	0.2

FIGURE 2-5
DISTRIBUTION OF PETROLEUM COMPOUNDS IN GROUNDWATER BUILDING 460
JANUARY 28, 1998

REMEDIAL ACTION PLAN
BUILDINGS 460 AND 1587

U.S. NAVAL STATION
MAYPORT, FLORIDA

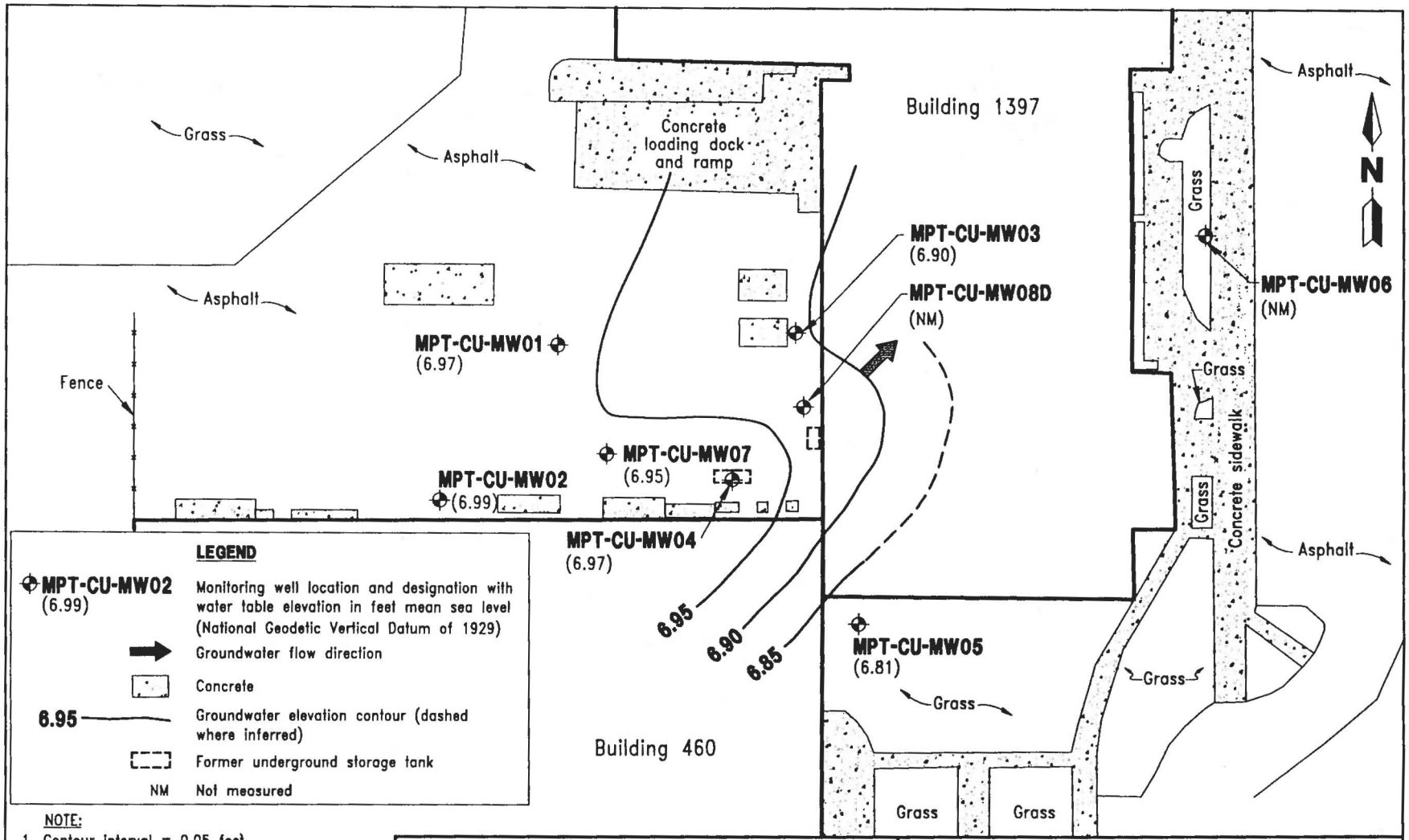

NOTE:
1. Contour interval = 0.05 feet.

0 25 50
SCALE: 1 INCH = 50 FEET

K:\02536\02536-18\RAP\02536513.DWG, VC-VC 02/09/99 08:54:24, AutoCAD R14

FIGURE 2-6
WATER TABLE ELEVATION CONTOUR MAP
BUILDING 460
JANUARY 28, 1998

REMEDIAL ACTION PLAN
BUILDINGS 460 AND 1587

U.S. NAVAL STATION
MAYPORT, FLORIDA

Slug tests were conducted in MW03 and MW04 on June 9, 1995, to characterize the hydrological properties of the upper zone of the shallow aquifer system. A discussion of the slug test procedure is included in the CAR for Building 460 (ABB-ES, 1996a). Hydraulic conductivity (K) values derived from the slug test data ranged from 5.17 to 6.63 feet per day (ft/day). Based on an average K of 5.90 ft/day and gradient of 0.0006 ft/ft (based on the June 1995 groundwater elevation data), the average linear pore water velocity (V) beneath the site was calculated to be approximately 0.014 ft/day or 5.11 feet per year (ft/yr).

2.1.3 Assessment Conclusions The following are pertinent conclusions based on results of the field investigations and associated laboratory analytical results from Building 460. The conclusions presented below provide the basis for selection of remedial action alternatives (Chapter 3.0) for this facility.

- Excessively contaminated soil (as defined by Chapter 62-770, FAC) is located in the vicinity of the former USTs, adjacent to and possibly beneath Buildings 460 and 1397. The petroleum-contaminated soil is covered by asphalt (an engineering control) which precludes contact with storm water infiltration. OVA headspace concentrations measured at the three soil sample locations during the supplemental assessment were significantly lower than the 1995 site assessment OVA headspace data, potentially indicating *in situ* biodegradation.

- Depth to groundwater measurements ranged from approximately 2 to 5 feet bls and are expected to fluctuate seasonally with variations in rainfall and tidal activity. Water table elevations measured during the supplemental assessment on January 28, 1998, indicate a north-northeast groundwater flow direction, with an average hydraulic gradient of 0.0017 ft/ft.

- Results of slug tests conducted June 9, 1995 indicate K values of approximately 5.17 to 6.63 ft/day. Based on an average K of 5.90 ft/day and gradient of 0.0006 ft/ft (based on the June 1995 groundwater elevation data), the average linear pore water V beneath the site was calculated to be approximately 0.014 ft/day or 5.11 ft/yr.

- Petroleum in the form of a light nonaqueous-phase liquid (LNAPL) was not detected on the surface of the water table in any monitoring wells during the assessment.

- The closest public potable water supply well is located approximately 1/4 mile hydraulically upgradient of Building 460. The water supply is obtained form an open hole interval in the Floridan aquifer system. The well is separated from the surficial aquifer by the confining sediments of the Hawthorn Group; therefore, it should not be affected by the petroleum compounds detected in groundwater samples collected from the site.

- Contaminants detected in groundwater samples collected on January 28, 1998, include MTBE and PAHs (naphthalene, acenaphthene, fluorene, phenanthrene, anthracene, fluoranthene, pyrene, and benzo(a)-anthracene). Only MTBE detected in groundwater samples from MW04 (36 parts per billion [ppb]) exceeded the State's groundwater cleanup

target level (GCTL) (35 ppb). All other compounds detected were below the State GCTLs.

- Review of groundwater analytical results from monitoring wells MW03 and MW04, which were sampled on June 1, 1995; March 25, 1996; and January 28, 1998; suggests that the concentrations of petroleum-related organic compounds are decreasing.

- Contaminants detected in soil samples collected on January 28, 1998, include ethylbenzene, total xylenes, PAHs, and TRPH. Only the concentrations of TRPH (8,700 milligrams per kilogram [mg/kg]) and benzo(a)anthracene (5.9 mg/kg) in a subsurface soil sample from boring SB-6 and TRPH (6,400 mg/kg) in a subsurface soil sample from SB-2 exceed their respective Direct Exposure I (residential) SCTLs (350 mg/kg for TRPH and 1.4 mg/kg for benzo(a)anthracene) and Direct Exposure II (industrial) SCTLs (2,500 mg/kg for TRPH and 5.2 mg/kg for benzo(a)anthracene).

- SPLP results from a subsurface soil sample collected at 4 feet bls from boring SB-6 suggest that naphthalene could leach from vadose zone soil at a concentration (28 $\mu g/\ell$) that would exceed the State's GCTL (20 $\mu g/\ell$).

- The site is underlain by fine- to medium-grained poorly sorted quartz and clayey sand containing thin, gray, sandy clay beds and some cemented hardpan. A clay layer approximately 10 feet in thickness is located between 70 and 80 feet bls (ABB-ES, 1996a).

2.2 BUILDING 1587

2.2.1 SITE HISTORY A 4,000-gallon UST that formerly contained Number 2 fuel oils was installed in 1960 and used to heat the BEQ. On March 18, 1994, a subcontractor discovered contaminated soil while attempting to install a cathodic protection system on the UST. A Discharge Reporting Form was submitted stating that an unknown amount of fuel had been released as a result of tank corrosion. The UST was taken out of service and replaced with a temporary, trailer-mounted aboveground storage tank (AST), which was located northeast of the UST area. Plastic sheeting and sand bags were placed around the AST to form a secondary containment dike until a new UST could be installed.

Subsequent to discovery of contaminated soil at the BEQ (Building 1587), G.B. Robbins, Inc., was contracted by SOUTHNAVFACENGCOM to remove and replace the UST and prepare a tank closure assessment report (TCAR) as required by Chapter 62-761, FAC. The existing 4,000-gallon UST was removed on April 27, 1995, concurrent with OVA soil screening, by G.B. Robbins, Inc. (Robbins, 1995). Excessively contaminated soil was detected at various locations surrounding the UST at depths 6 to 8 bls (as defined by Chapter 62-770, FAC). Therefore, as an IRA, approximately 27 tons of excessively contaminated soil was excavated. The soil was transported to Industrial Waste East, Inc., in Woodbine, Georgia, for disposal (ABB-ES, 1996b). As required by Chapter 62-761, FAC, groundwater samples were obtained from a temporary monitoring well for analyses by USEPA Methods 602 and 610 to assess the groundwater quality in the immediate vicinity of the UST. Analytical results indicated naphthalenes, benzene, and ethylbenzene

concentrations in the groundwater samples were below NFA guidelines. A new 4,000-gallon UST and dispensing system was installed in July 1995 and, after tightness testing, became operational in August 1995.

HLA was contracted by SOUTHNAVFACENGCOM to conduct a site assessment at Building 1587, in accordance with the requirements of Chapter 62-770, FAC (effective February 21, 1990). The site assessment was conducted from May to October 1995, and a CAR was submitted to SOUTHNAVFACENGCOM in February 1996. The purpose for the assessment was to characterize the nature and extent of petroleum-related compounds in soil and groundwater. Tasks included in the assessment of Building 1587 included soil sampling, groundwater monitoring well installation and sampling, free-product assessment, a potable well survey, and a groundwater elevation survey.

Additional soil and groundwater sampling and analysis and a groundwater elevation survey were conducted at Building 1587 in response to FDEP comments on the CAR report, and in consideration of revisions to Chapter 62-770, FAC (effective September 23, 1997). Results of the supplemental assessment were documented in a CAR Addendum submitted to SOUTHNAVFACENGCOM in July 1998 (HLA, 1998b). The CAR Addendum recommended overdevelopment of a monitoring well and either NFA with land-use restrictions (Chapter 62-770.680[2], FAC) or monitoring only for natural attenuation (Chapter 62-770.690[1], FAC). FDEP reviewed the document and requested an RAP to address soil contamination at the site.

2.2.2 CA and Supplemental Investigation Findings This subsection presents a summary of findings based on the CA and the supplemental assessment (documented in the CAR Addendum) conducted for Building 1587.

2.2.2.1 **Preliminary Contamination Assessment** The 4,000-gallon UST was removed from Building 1587 on April 27, 1995. OVA screening during the tank removal indicated excessively contaminated soil (OVA greater than 50 parts per million [ppm]), which was subsequently excavated and disposed of off site. Groundwater samples were collected from a temporary monitoring well for analyses by USEPA Methods 602 and 610. Analytical results indicated naphthalene, benzene, and ethylbenzene concentrations were below NFA guidelines. The tank closure activities were documented in a TCAR (Robbins, 1995), and a new UST was installed to the northeast of the former UST location.

2.2.2.2 **Soil Borings** To characterize the extent of soil contamination in the vicinity of the former UST at Building 1587, 26 soil borings were advanced to the water table during the CA in May, October, and November 1995. Soil samples were screened with an OVA equipped with an FID to assess concentrations of VOCs in the unsaturated zone surrounding the former UST. Soil with OVA concentrations greater than 50 ppm was detected in the unsaturated zone at SB-11, SB-12, SB-21, and SB-22, which are located in the vicinity of the fuel pump house and former UST location. The locations of the soil borings are shown on Figure 2-7. Results of the OVA screening for soil borings SB-1 through SB-26 are presented in Table 2-6.

2.2.2.3 **Soil Sampling and Analytical Results** As part of the supplemental assessment of Building 1587, three soil samples were collected and analyzed for the following KAG COC, specified in Chapter 62-770, FAC, Table I: VOCs including MTBE (USEPA Method 8020), PAHs (USEPA Method 8310), and TRPH (FL-PRO method). To assess the potential for contaminants in soil to leach to groundwater, soil

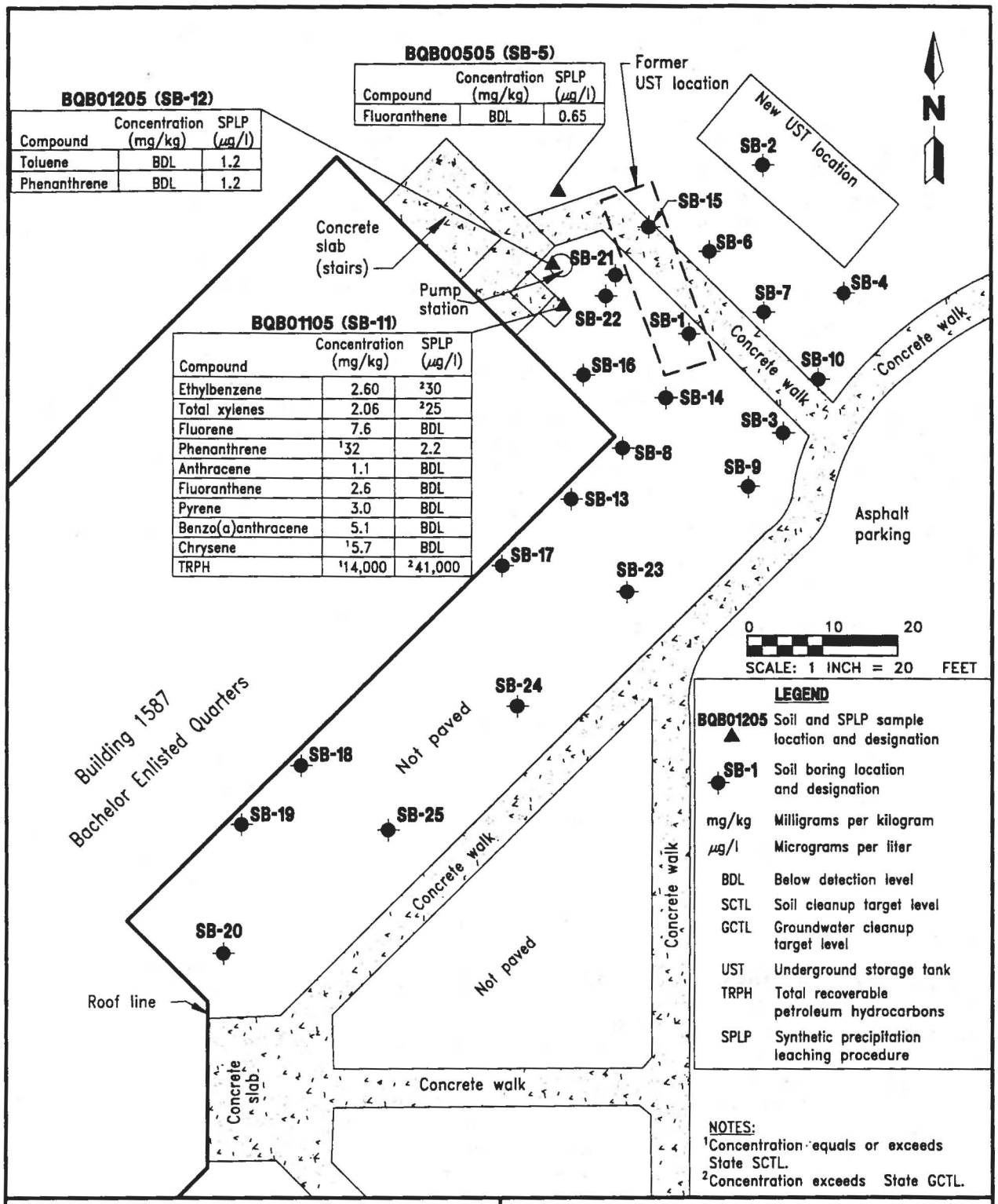

FIGURE 2-7
SOIL CONTAMINATION DISTRIBUTION MAP
BUILDING 1587

K:\02536\02536-16\RAP\02536514.DWG, VC-VC 02/09/99 10:10:02, AutoCAD R14

REMEDIAL ACTION PLAN
BUILDINGS 460 AND 1587

U.S. NAVAL STATION
MAYPORT, FLORIDA

Table 2-6
Summary of Soil Sample OVA Results, Building 1587, May and November 1995

Remedial Action Plan
Buildings 460 and 1587
U.S. Naval Station
Mayport, Florida

Boring Number	Depth (feet bls)	Unfiltered Concentration	Filtered Concentration	Actual Concentration	Comments
[1]SB-1	4 to 4.5	3	0	3	
	6 to 6.5	800	0	800	wet
SB-2	1 to 1.5	0	--	0	
	3 to 3.5	0	--	0	
	5 to 5.5	0	--	0	wet
SB-3	1 to 1.5	0	--	0	
	3 to 3.5	0	--	0	
	4.5 to 5	1,500	0	1,500	wet
SB-4	1 to 1.5	0	--	0	
	3 to 3.5	0	--	0	
SB-5	1 to 1.5	0	--	0	
	3 to 3.5	0	--	0	
	4.5 to 5	0	--	0	
SB-6	1 to 1.5	0	--	0	
	3 to 3.5	0	--	0	
	4 to 4.5	0	--	0	
SB-7	1 to 1.5	0	--	0	
	3 to 3.5	0	--	0	
	4 to 4.5	0	--	0	
SB-8	1.5 to 2	0	--	0	
	3.5 to 4	0	--	0	
	4.5 to 5	0	--	0	
SB-9	1.5 to 2	0	--	0	
	2.5 to 3	0	--	0	
	3.5 to 4	0	--	0	
SB-10	1 to 1.5	0	--	0	
	3 to 3.5	0	--	0	
	4 to 4.5	0	--	0	
SB-11	1.5 to 2	0	--	0	
	3.5 to 4	270	0	270	
	4.5 to 5	4,200	0	4,200	
	5.5 to 6	1,800	0	1,800	
SB-12	1.5 to 2	75	0	75	
	2.5 to 3	320	0	320	
	4 to 4.5	1,800	0	1,800	
	5.5 to 6	1,500	0	1,500	

See notes at end of table.

Table 2-6 (Continued)
Summary of Soil Sample OVA Results, Building 1587, May and November 1995

Remedial Action Plan
Buildings 460 and 1587
U.S. Naval Station
Mayport, Florida

Boring Number	Depth (feet bls)	Unfiltered Concentration	Filtered Concentration	Actual Concentration	Comments
SB-13	1.5 to 2	0	--	0	
	3.5 to 4	0	--	0	
	5.5 to 6	0	--	0	
SB-14	1.5 to 2	0	--	0	
	3 to 3.5	0	--	0	
	4.5 to 5	900	0	900	damp
SB-15	1.5 to 2	5	0	5	
	3.5 to 4	6	0	6	
	5 to 5.5	0	--	0	
	6 to 6.5	350	0	350	damp
SB-16	1.5 to 2	0	--	0	
	3 to 3.5	0	--	0	
	4.5 to 5	1,100	0	1,100	damp
[2]SB-17	3 to 3.5	0	--	0	
	4.5 to 5	0	--	0	damp
	5.5 to 6	0	--	0	wet
[2]SB-18	3 to 3.5	27	0	27	
	5 to 5.5	3	0	3	damp
	6 to 6.5	2	0	2	wet
[2]SB-19	3 to 3.5	0	--	0	
	4 to 4.5	0	--	0	damp
	6 to 6.5	0	--	0	wet
[2]SB-20	3 to 3.5	0	--	0	
	4 to 4.5	0	--	0	damp
	6 to 6.5	0	--	0	wet
[3]SB-21	2.5 to 3	0	--	0	
	4 to 4.5	100	0	100	damp
	5 to 5.5	300	0	300	damp
	6 to 6.5	1,900	0	1,900	wet
[3]SB-22	3.5 to 4	300	0	300	damp
	4.5 to 5	120	0	120	damp
	6 to 6.5	900	0	900	wet
SB-23	1 to 1.5	0	--	0	
	2 to 2.5	0	--	0	damp
	3 to 3.5	0	--	0	damp
	4 to 4.5	0	--	0	wet

See notes at end of table.

Table 2-6 (Continued)
Summary of Soil Sample OVA Results, Building 1587, May and November 1995

Remedial Action Plan
Buildings 460 and 1587
U.S. Naval Station
Mayport, Florida

Boring Number	Depth (feet bls)	Unfiltered Concentration	Filtered Concentration	Actual Concentration	Comments
SB-24	1 to 1.5	0	--	0	
	2 to 2.5	0	--	0	damp
	3 to 3.5	0	--	0	damp
	4 to 4.5	0	--	0	damp
SB-25	1 to 1.5	0	--	0	
	2 to 2.5	0	--	0	damp
	3 to 3.5	0	--	0	damp
	4 to 4.5	0	--	0	wet
SB-26	1 to 1.5	0	--	0	
	2 to 2.5	0	--	0	
	3 to 3.5	0	--	0	damp
	4 to 4.5	0	--	0	damp
	5 to 5.5	3,500	0	3,500	wet
	6 to 6.5	3,700	0	3,700	wet

[1] Excavation at soil boring location contained clean backfill material from 0 to 4 feet bls.
[2] Area excavated to 3 feet bls to expose 3/4-inch water line.
[3] Area excavated to install new fuel lines.

Notes: Concentrations are reported in parts per million.

OVA = organic vapor analyzer.
bls = below land surface.
-- = no OVA reading.

samples were analyzed by SPLP (USEPA Method 1312 followed by the same group of parameters). The soil grab samples were collected on January 28, 1998, from areas of high, medium, and low OVA headspace readings (based on the 1995 OVA results) to characterize petroleum contamination in the unsaturated zone, in accordance with Chapter 62-770.600, FAC (effective September 23, 1997).

The soil samples were collected from locations adjacent to soil borings SB-5, SB-11 and SB-12, at a depth approximately one foot above the water table (5 feet bls). Soil sample and SPLP analytical results are summarized in Tables 2-7 and 2-8, respectively. The compounds included in each table are those detected in one or more of the samples. A summary of the compounds detected at each sample location is also presented on Figure 2-7.

2.2.2.4 **Groundwater Sampling and Analytical Results** Seven shallow monitoring wells MPT-BQ-01 through MPT-BQ-07 (MW-01 through MW-07) were installed and sampled during the CA in May 1995 in order to characterize the horizontal extent of the groundwater contaminant plume at Building 1587. The groundwater samples were analyzed for the following KAG COC, specified in Chapter 62-770, FAC, Table I: VOCs including MTBE (USEPA Method 602), PAHs (USEPA Method 610), ethylene dibromide (USEPA Method 504.1), lead (USEPA Method 239.2), and TRPH (FL-PRO method). No compounds were detected at levels exceeding the NFA groundwater target levels. The highest detected concentrations of petroleum constituents were from MW04 and MW06, near the fuel pumphouse and the southern perimeter of the former UST area (Figure 2-8). Results of the May 31, 1995, groundwater sampling event were documented in the CAR for Building 1587 (ABB-ES, 1996b).

As part of the supplemental assessment of Building 1587, groundwater samples were collected from MW04 (source area well) and MW06 (a downgradient well), in order to confirm the analytical results from the CA in 1995, and determine whether or not contaminants were migrating downgradient. The groundwater samples were collected on January 29, 1998, and analyzed for VOCs (USEPA Methods 601 and 602) only, because no other petroleum COC were detected during the 1995 site assessment. Benzene in MW04 was the only compound detected at a level exceeding its respective GCTL. The analytical results for groundwater samples collected in both May 1995 and January 1998 are presented in Table 2-9. Monitoring well locations and groundwater analytical results from the January 29, 1998, sampling event are shown on Figure 2-8.

2.2.2.5 **Groundwater Elevation Survey** Depth-to-groundwater measurements were collected as part of the CA for Building 1587 on May 31, 1995, and September 19, 1995, using an electronic water-level indicator. Water table elevations were calculated by correlating the TOC elevations for each monitoring well to a common datum (National Geodetic Vertical Datum of 1927). A third round of depth-to-groundwater measurements was collected during the supplemental assessment on January 29, 1998. Monitoring wells MPT-BQ-MW01 and MW-05 could not be located and were assumed destroyed during construction activities to replace the UST and sidewalk. LNAPL was not measured in any site monitoring wells during the assessment. Depth-to-water, TOC, and water table elevation data for each gauging event are presented in Table 2-10. A water table elevation contour map for Building 1587 (based on the January 29, 1998, measurements) is shown on Figure 2-9.

Table 2-7
Soil Sample Analytical Results, Building 1587,
January 29, 1998

Remedial Action Plan
Buildings 460 and 1587
U.S. Naval Station
Mayport, Florida

Contaminant	Soil Boring, Sample Identifier, and OVA Headspace Reading			[1]State SGTL
	SB-5 BQB00505 (0 ppm)	SB-12 BQB01205 (3 ppm)	SB-11 BQB01105 (180 ppm)	
Purgeable Aromatic Hydrocarbons (USEPA Method 602) (mg/kg)				
Ethylbenzene	<0.0012	<0.0013	2.60	240
Xylenes, total	<0.0025	<0.0025	2.06	290
Polynuclear Aromatic Hydrocarbons (USEPA Method 8310) (mg/kg)				
Fluorene	<0.0084	<0.0084	7.6	2,100
Phenanthrene	<0.0084	<0.0084	32	1,900
Anthracene	<0.0041	<0.0041	1.1	19,000
Fluoranthene	<0.0041	<0.0041	2.6	2,800
Pyrene	<0.0041	<0.0041	3.0	2,200
Benzo(a)anthracene	<0.0041	<0.0041	[2]5.1	1.4
Chrysene	<0.0041	<0.0041	5.7	140
Total Recoverable Petroleum Hydrocarbons (TRPH) (FL-PRO Method) (mg/kg)				
TRPH	<5.0	<5.1	[2]14,000	350

[1] Chapter 62-770, Florida Administrative Code (FAC), Table IV, Direct Exposure I.
[2] Concentration equals or exceeds State SCTL.

Notes: Values in parentheses represent corrected OVA readings of soil sample in ppm.

OVA = organic vapor analyzer.
ppm = parts per million.
SCTL = soil cleanup target level (Chapter 62-770, FAC); Table IV, Soil Cleanup Target Levels: Direct Exposure I.
USEPA = U.S. Environmental Protection Agency.
mg/kg = milligrams per kilogram.
< = less than.
FL-PRO = Florida-Petroleum Residual Organics.

Table 2-8
Analytical Results of Soil SPLP Samples, Building 1587, January 29, 1998

Remedial Action Plan
Buildings 460 and 1587
U.S. Naval Station
Mayport, Florida

Contaminant	Soil Boring, Sample Identifier, and OVA Headspace Concentration			[1]State GCTL
	SB-5 BQB00505L (0 ppm)	SB-12 BQB01205L (3 ppm)	SB-11 BQB01105L (180 ppm)	
Purgeable Aromatic Hydrocarbons (USEPA Method 602) (µg/ℓ)				
Toluene	<1	1.2	<1	40
Ethylbenzene	<1	<1	[2]30	30
Xylenes, total	<2	<2	[2]25	20
Polynuclear Aromatic Hydrocarbons (USEPA Method 8310) (µg/ℓ)				
Fluoranthene	0.65	<0.5	<0.5	280
Phenanthrene	<1	1.2	2.2	210
Total Recoverable Petroleum Hydrocarbons (TRPH) (FL-PRO Method) (µg/ℓ)				
TRPH	NA	NA	[2]41,000	5,000

[1] Chapter 62-770, Florida Administrative Code (FAC), Table V.
[2] Concentration equals or exceeds State GCTL.

Notes: Values in parentheses represent corrected OVA readings of soil sample in ppm.

SPLP = synthetic precipitation leaching procedure.
OVA = organic vapor analyzer.
ppm = parts per million.
GCTL = groundwater cleanup target level (Chapter 62-770, FAC); Table V, Groundwater Cleanup Target Levels for Resource Protection/Recovery.
USEPA = U.S. Environmental Protection Agency.
µg/ℓ = micrograms per liter.
< = less than.
FL-PRO = Florida-Petroleum Residual Organics.
NA = not analyzed.

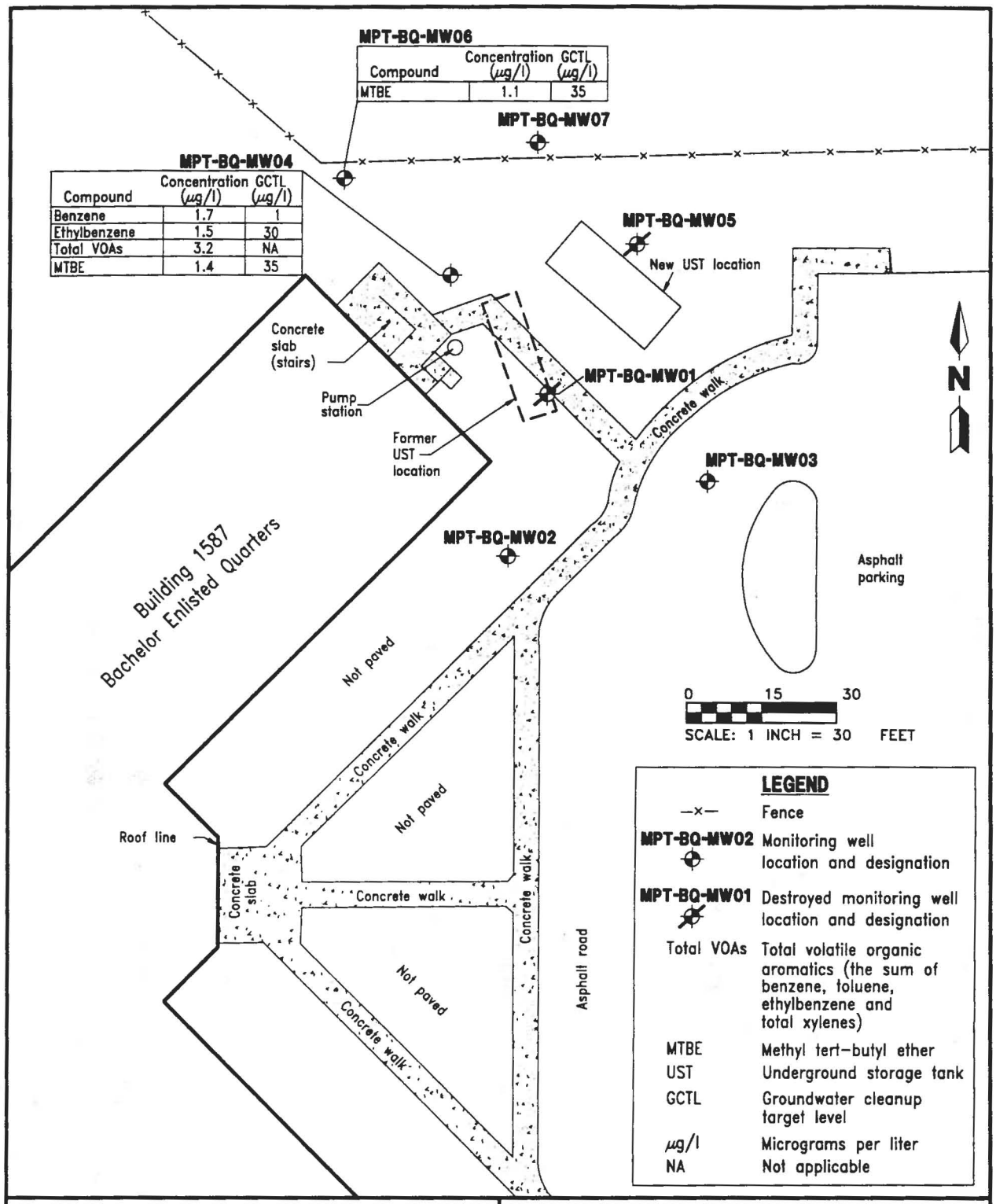

FIGURE 2-8
DISTRIBUTION OF PETROLEUM COMPOUNDS IN GROUNDWATER, BUILDING 1587
JANUARY 29, 1998

K:\02536\02536-16\RAP\02536517.DWG, VC-VC 02/05/99 16:39:08, AutoCAD R14

REMEDIAL ACTION PLAN
BUILDINGS 460 AND 1587

U.S. NAVAL STATION
MAYPORT, FLORIDA

Table 2-9
Summary of Groundwater Analytical Results, Building 1587, May 31, 1995, and January 29, 1998

Remedial Action Plan
Buildings 460 and 1587
U.S. Naval Station
Mayport, Florida

Contaminant	Well Identification (MPT-BQ-) and Date Sampled										State Target Level[1]
	MW01 5/31/95	MW01DS 5/31/95	MW02 5/31/95	MW03 5/31/95	MW04 5/31/95	MW04 1/29/98	MW05 5/31/95	MW06 5/31/95	MW06 1/29/98	MW07 5/31/95	
Volatile Organic Aromatics (USEPA Method 601/602) (μg/ℓ)											
Benzene	2.5	3.2	ND	ND	3.1	1.7	ND	ND	ND	ND	1
Toluene	ND	ND	ND	ND	ND	ND	ND	ND	ND	ND	40
Ethylbenzene	5.7	6.9	ND	ND	16	1.5	ND	2.7	ND	ND	30
Xylenes, total	3.2	4.5	ND	ND	ND	ND	ND	ND	ND	ND	20
Total VOAs	11.4	14.6	ND	ND	19.1	3.2	ND	2.7	ND	ND	NA
Methyl tert-butyl ether	ND	ND	ND	ND	ND	1.4	ND	ND	1.1	ND	35
Polynuclear Aromatic Hydrocarbons (PAHs) (USEPA Method 610) (μg/ℓ)											
Total Naphthalenes	ND	ND	ND	ND	ND	NS	ND	ND	NS	ND	NA
Total PAHs (excluding naphthalenes)	ND	ND	ND	ND	ND	NS	ND	ND	NS	ND	NA
Total Recoverable Petroleum Hydrocarbons (TRPH) (USEPA Method 418.1) (mg/ℓ)											
TRPH	ND	ND	ND	ND	ND	NS	ND	ND	NS	ND	5
Ethylene Dibromide (EDB) (USEPA 601) (μg/ℓ)											
EDB	ND	ND	ND	ND	ND	NS	ND	ND	NS	ND	0.02
Lead (USEPA Method 239.2) (μg/ℓ)											
Lead, unfiltered	ND	ND	ND	ND	ND	NS	ND	ND	NS	ND	15

[1] Chapter 62-770, Florida Administrative Code, Table V, Groundwater Cleanup Target Levels for Resource Protection/Recovery (September 23, 1997).

Notes: DS = duplicate sample.
USEPA = U.S. Environmental Protection Agency.
μg/ℓ = micrograms per liter.
ND = not detected.
Total VOAs = total volatile organic aromatics: the sum of benzene, toluene, ethylbenzene, and xylenes.
NA = not applicable.
mg/ℓ = milligrams per liter.
NS = not sampled.

Table 2-10
Water Table Elevation Data, Building 1587

Remedial Action Plan
Buildings 460 and 1587
Naval Air Station
Mayport, Florida

Monitoring Well Number	Total Well Depth (feet bls)	Screened Interval (feet bls)	TOC Elevation (feet msl)	May 31, 1995		September 19, 1995		January 29, 1998	
				Depth to Water (feet BTOC)	Water Level Elevation (feet msl)	Depth to Water (feet BTOC)	Water Level Elevation (feet msl)	Depth to Water (feet BTOC)	Water Level Elevation (feet msl)
MPT-BQ-MW01	14.0	4.0 to 14.0	10.47	6.18	4.29	4.05	6.42	NM	NM
MPT-BQ-MW02	13.5	3.5 to 13.5	10.18	5.80	4.38	3.69	6.49	5.29	4.89
MPT-BQ-MW03	13.0	3.0 to 13.0	8.63	4.31	4.32	2.28	6.35	3.77	4.86
MPT-BQ-MW04	14.0	4.0 to 14.0	11.95	7.69	4.26	5.40	6.55	7.12	4.83
MPT-BQ-MW05	14.0	4.0 to 14.0	10.58	6.33	4.25	4.21	6.37	NM	NM
MPT-BQ-MW06	14.0	4.0 to 14.0	12.27	8.05	4.22	5.49	6.78	7.48	4.79
MPT-BQ-MW07	14.0	4.0 to 14.0	12.07	7.86	4.21	5.66	6.41	7.32	4.75

Notes: bls = below land surface.
TOC = top-of-casing.
msl = mean sea level.
BTOC = below top of casing.
NM = not measured.

FINAL DRAFT

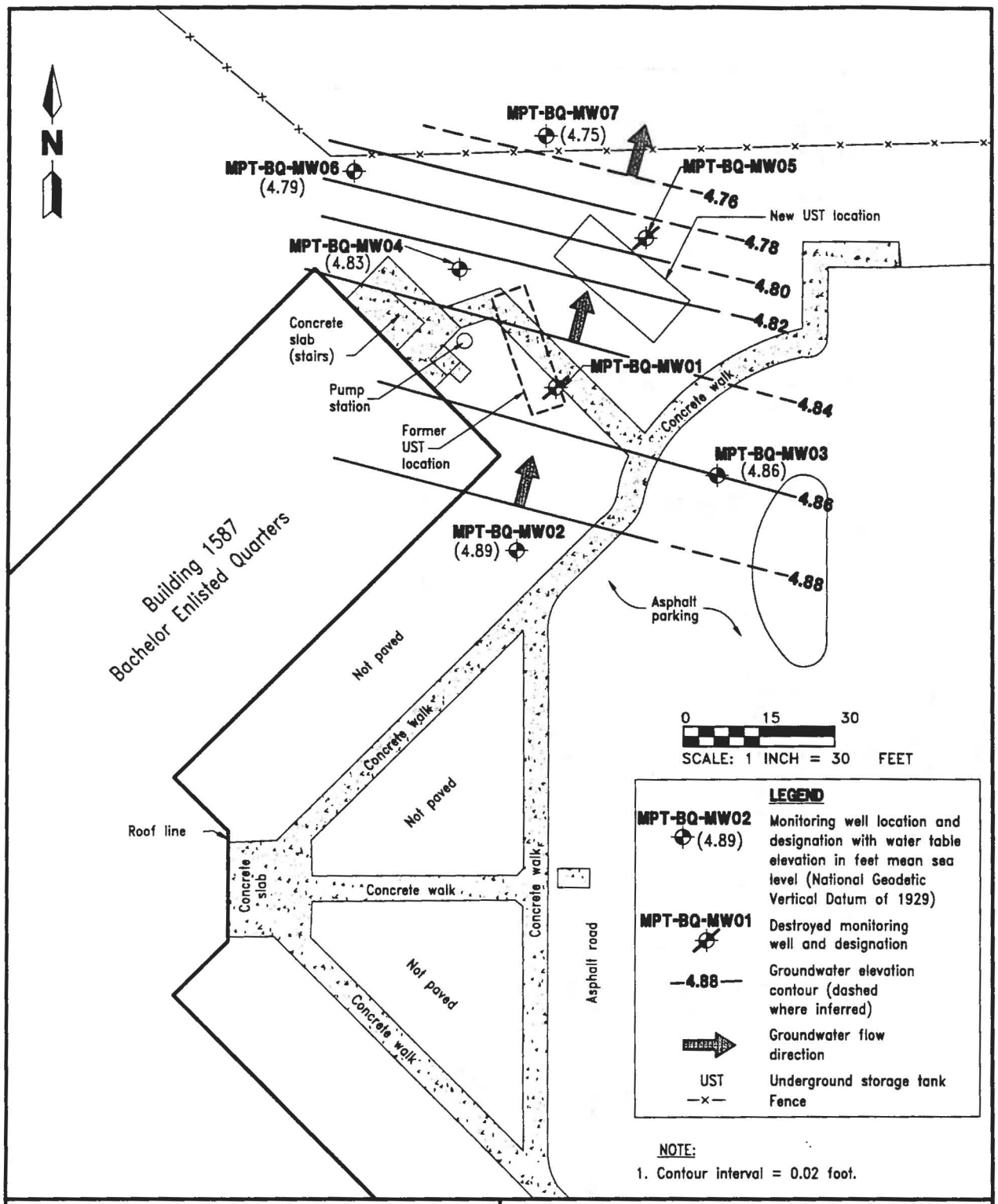

FIGURE 2-9
WATER TABLE ELEVATION CONTOUR MAP
BUILDING 1587
JANUARY 29, 1998

K:\02536\02536-16\RAP\02536516.DWG, VC-VC 02/09/99 09:55:55, AutoCAD R14

REMEDIAL ACTION PLAN
BUILDINGS 460 AND 1587

U.S. NAVAL STATION
MAYPORT, FLORIDA

Based on water table elevations measured in May 31, 1995, the groundwater flow direction at Building 1587 is toward the north-northeast, with an average hydraulic gradient of 0.0031 ft/ft. The January 29, 1998, water table elevation data also indicate a north-northeast groundwater flow direction and an average hydraulic gradient of approximately 0.0017 ft/ft, which appears to be consistent with the May 31, 1995, gradient.

2.2.3 Assessment Conclusions The following are pertinent conclusions based on results of the field investigations and associated laboratory analytical results from Building 1587. The conclusions presented below provide the basis for selection of remedial action alternatives (Chapter 3.0) for this facility.

- Excessively contaminated soil (as defined by Chapter 62-770, FAC) is located in a grass-covered area, between the stairwell to Building 1587 and the former UST location. OVA headspace concentrations measured at three soil sample locations during the supplemental assessment were significantly lower than the 1995 site assessment OVA headspace data, possibly from *in situ* biodegradation.

- Depth to groundwater measurements ranged from approximately 2 to 8 feet bls, and are expected to fluctuate seasonally with variations in rainfall and tidal activity. Water table elevations measured during the supplemental assessment on January 29, 1998, indicate a north-northeast groundwater flow direction with an average hydraulic gradient of approximately 0.0017 ft/ft.

- Petroleum in the form of LNAPL was not detected on the surface of the water table in any monitoring wells during the assessment.

- The closest potable public water supply well is located approximately 1/2 mile hydraulically upgradient of Building 1587. The water supply is derived from an open hole interval in the Floridan aquifer system. The well is separated from the surficial aquifer by the confining sediments of the Hawthorn Group; therefore, it should not be affected by petroleum compounds detected in groundwater at the site.

- Contaminants detected in groundwater samples collected on May 31, 1995, and January 29, 1998 include benzene, ethylbenzene, total xylenes, and MTBE. Only benzene (concentrations ranging from 1.7 to 3.2 $\mu g/\ell$) exceeded the State's GCTL (1.0 $\mu g/\ell$) in groundwater samples collected from monitoring wells located at the former UST location and hydraulically downgradient from the petroleum-contaminated soil.

- Review of groundwater analytical data collected from MW04 on May 31, 1995, and January 29, 1998, suggests that the concentrations of petroleum-related organic compounds are decreasing.

- Contaminants detected in soil samples collected on January 29, 1998, include ethylbenzene, total xylenes, PAHs, and TRPH. Only the concentrations of TRPH (14,000 mg/kg) and benzo(a)anthracene (5.1 mg/kg) in soil boring SB-11 exceed their respective Direct Exposure I (residential) SCTLs (350 mg/kg for TRPH and 1.4 mg/kg for benzo(a)anthracene) and Direct Exposure II (industrial) SCTL for TRPH (2,500 mg/kg).

- SPLP results from a subsurface soil sample collected from SB-11 suggest that ethylbenzene, total xylenes, and TRPH could leach from vadose zone soil at concentrations (30, 25, and 41,000 $\mu g/\ell$, respectively) that would equal or exceed the State's GCTLs (30, 20, and 5,000 $\mu g/\ell$, respectively).

- The site is underlain by fine- to medium-grained poorly sorted quartz and clayey sand containing thin, gray, sandy clay beds and some cemented hardpan. A clay layer approximately 10 feet in thickness is located between 70 and 80 feet bls (ABB-ES, 1996b).

3.0 REMEDIAL ALTERNATIVE SELECTION

This chapter presents the objectives for remedial action at Buildings 460 and 1587 that provide the basis for identifying appropriate remedial technologies to address contamination at the sites. To establish these objectives, the COCs in both soil and groundwater are first identified (Section 3.1). Next, cleanup criteria are defined based on consideration of State cleanup requirements (Section 3.2). The information presented in this chapter will be used to identify appropriate remedial technologies for Buildings 460 and 1587 (Sections 3.3 and 3.4).

3.1 CHEMICALS OF CONCERN. The COCs for soil and groundwater at Buildings 460 and 1587 are defined as those contaminants in the KAG of parameters (Chapter 62-770, FAC, Table I) that were detected at levels **above** their respective State regulatory criteria during the site assessments. The COCs for Buildings 460 and 1587 are presented in Tables 3-1 and 3-2, respectively.

It should be noted that the sampling method detection limit for two compounds (benzo(a)pyrene and dibenz(a,h,)anthracene) in soil at Building 460 exceeded their respective SCTLs (refer to Table 3-2). Therefore, these two PAHs are potential COCs for soil at Building 460. However, because benzo(a)anthracene is a COC, and is also a PAH, soil sampling following remediation at Building 460 will include analysis for USEPA Method 8310, which includes all three PAHs. It is possible to achieve detection limits below the SCTLs for benzo(a)pyrene and dibenz(a,h,)anthracene (0.1 mg/kg for both compounds) when analyzing by USEPA Method 8310. This matter should be discussed with the laboratory tasked with analyzing the soil samples following remedial action at Building 460 in an effort to determine whether or not benzo(a)pyrene and dibenz(a,h,)anthracene are indeed below their respective SCTLs.

3.2 CLEANUP CRITERIA. Regulatory standards applicable to remediation of petroleum-contaminated soil and groundwater are contained in Chapter 62-770, FAC, and should be applied following treatment by any method. Standards that regulate the cleanup of petroleum-contaminated soil at these sites are SCTLs (Chapter 62-770, FAC, Table IV, Direct Exposure I). Standards for petroleum-contaminated groundwater are GCTLs (Chapter 62-770, FAC, Table V).

Target cleanup concentrations for the COCs in soil and groundwater at Buildings 460 and 1587 are presented in Tables 3-1 and 3-2, respectively.

3.3 REMEDIAL ALTERNATIVES CONSIDERED. Because cleanup technologies applicable to sites contaminated with petroleum substances are continually being improved and developed, it is important to develop remedial action alternatives using the most effective technologies available. Appendix B contains the technology screening for the alternatives that were evaluated for Buildings 460 and 1587.

Table 3-1
Chemicals of Concern, Building 460

Remedial Action Plan
Buildings 460 and 1587
U.S. Naval Station
Mayport, Florida

Compound	Maximum Detected Concentration[1]	Cleanup Criteria[2]
Soil (mg/kg)		
Total recoverable petroleum hydrocarbons	8,700	350
Benzo(a)anthracene	5.9	1.4
Groundwater (μg/ℓ)		
Methyl tert-butyl ether	36	35
Soil, Leaching (μg/ℓ)		
Naphthalene	28	20

[1] Maximum detected concentration of samples collected on January 28, 1998.
[2] Cleanup criteria for soil are Soil Cleanup Target Levels for Direct Exposure I (residential) use (Chapter 62-770, Florida Administrative Code [FAC], Table IV, effective September 27, 1997).

Notes: Cleanup criteria for groundwater and soil, leaching, are Groundwater Cleanup Target Levels (Chapter 62-770, FAC, Table V, effective September 23, 1997).

mg/kg = milligrams per kilogram.
μg/ℓ = micrograms per liter.

Table 3-2
Chemicals of Concern, Building 1587

Remedial Action Plan
Buildings 460 and 1587
U.S. Naval Station
Mayport, Florida

Compound	Maximum Detected Concentration[1]	Cleanup Criteria[2]
Soil (mg/kg)		
Total recoverable petroleum hydrocarbons (TRPH)	14,000	350
Benzo(a)anthracene	5.1	1.4
Groundwater (μg/ℓ)		
Benzene	1.7	1
Soil, Leaching (μg/ℓ)		
Xylenes, total	25	20
TRPH	41,000	5,000

[1] Maximum detected concentration of samples collected on January 29, 1998.
[2] Cleanup criteria for soil are Soil Cleanup Target Levels for Direct Exposure I (residential) use (Chapter 62-770, Florida Administrative Code [FAC], Table IV, effective September 27, 1997).

Notes: Cleanup criteria for groundwater and soil, leaching, are Groundwater Cleanup Target Levels (Chapter 62-770, FAC, Table V, effective September 23, 1997).

mg/kg = milligrams per kilogram.
μg/ℓ = micrograms per liter.

3.4 SELECTION OF REMEDIAL ALTERNATIVES.

3.4.1 Building 460 Based on the technology screening contained in Appendix B, and specifically the site conditions at Building 460, vacuum enhanced SVE and natural attenuation of volatilized petroleum hydrocarbons in soil, along with monitored natural attenuation for groundwater, is the most appropriate remedial action for Building 460. The site conditions at Building 460 are considered conducive to SVE. Vadose zone soils consist of fine-grained, loose- to medium-density sand with some fines. Hydraulic conductivity at the site was reported in the CAR to range from 5.17 to 6.63 ft/day. An estimate of intrinsic permeability based on the K is approximately 10^{-7} square centimeters (cm^2). COCs in soil are TRPH and benzo(a)anthracene (constituents of Number 2 fuel oil). In addition, the pavement covering most of the contaminated soil at Building 460 is functioning as an engineering control which is minimizing surface water infiltration, and will act as a cap during operation of the SVE system. The cap will increase the area of influence of the horizontal vacuum enhanced extraction (VEE) well and prevent short circuiting of the system. Remediation of the petroleum-contaminated soil will expedite compliance with the remedial objectives for groundwater as well. The selected remedial action for Building 460 is discussed in more detail in Chapter 4.0

3.4.2 Building 1587 Based on the technology screening contained in Appendix B, source zone reduction via soil excavation and monitored natural attenuation for groundwater is the most appropriate remedial action for Building 1587. Direct excavation is an efficient remedial option for small areas of contaminated soil. Because the contaminated medium at Building 1587 is overlain by grass, the site can be quickly restored to its original conditions, causing minimal interruption to normal site activities. Removal of the known petroleum-contaminated soil will expedite compliance with the remedial objectives for groundwater. Disposal of excavated soil at an off-site landfill is considered to be the most economical option. The selected remedial action for Building 1587 is discussed in more detail in Chapter 4.0.

4.0 REMEDIAL DESIGN

4.1 BUILDING 460: SVE/GROUNDWATER MONITORING.

4.1.1 Technology Description In an SVE system, a vacuum applied to a slotted well casing creates an air flow through the contaminated soil towards the extraction well. As the contaminated vapor is extracted from the subsurface, a concentration gradient is created between the soil vapor and the sorbed contaminants. As the imbalanced contaminant concentration attempts to reach a equilibrium, fresh air continues to enter the contaminated soils. The continual recharge of air sustains the ongoing concentration gradient until the soils become clean.

4.1.2 System Design A pilot study was not conducted for this site. Based on pilot scale and full scale studies conducted at Naval Air Station Jacksonville, Jacksonville, Florida, for similar soil types and hydrogeological conditions, the vacuum radius of influence is estimated to be 35 feet. Based on calculations presented in Appendix C-1, Building 460 requires a 80-foot-long vapor extraction trench (VET), with a total flow rate of 200 cubic feet per minute (ft^3/min) at a total vacuum pressure of 50 inches of water column. Based on these requirements, the recommended vacuum blower for this site is a Rotron Model EN808 regenerative blower or equivalent. Figure 4-1 presents the proposed layout for the VEE system, Figure 4-2 presents a schematic for the system, and Figure 4-3 presents the piping and instrumentation diagram. The following paragraphs provide a brief description of the components of the SVE system at Building 460.

4.1.2.1 **Horizontal VET** In order to maximize the recovery of soil vapor from the vadose zone and prevent drawing the shallow groundwater into the SVE system, a horizontal extraction well will be used at Building 460. The total volume of contaminated soil to be remediated at Building 460 is approximately 846 cubic yards (yd^3) (based on a surface area of 4,566 (square feet [ft^2]) and depth to groundwater of 5 feet). The horizontal well will be installed along the long axis of the elongated area of contaminated soil in the vadose zone. The vapor extraction piping shall be 6-inch, Schedule 40, 0.20-slot polyvinyl chloride (PVC). Installation of the VET will include cutting overlying pavement, excavating a trench approximately 12 inches wide and 2 feet deep, and placing a geotextile filter fabric along the perimeter of the excavated trench. A pea gravel bedding material shall be installed around the slotted vapor extraction piping, overlain by compacted soil and replacement asphalt. A geotextile filter fabric placed around the pea gravel and vapor extraction pipe will prevent overlying soil from settling into the pea gravel, thereby interfering with vapor flow to the piping. Figure 4-4 presents a detail of the VET. Soil excavated from the trench (approximately 6 yd^3) shall be stockpiled in a covered roll-off, analyzed for toxicity characteristic leaching procedure (TCLP), manifested, and disposed of at a local permitted landfill.

4.1.2.2 **Moisture Separator** A moisture separator tank ("knock out tank") will be installed on the inlet side of the blower to remove excess water from the gaseous stream. The moisture separation process is intended to prevent and to prevent moisture from being drawn into the vacuum blower motor and to prevent the activated carbon from being rendered ineffective by a liquid coating.

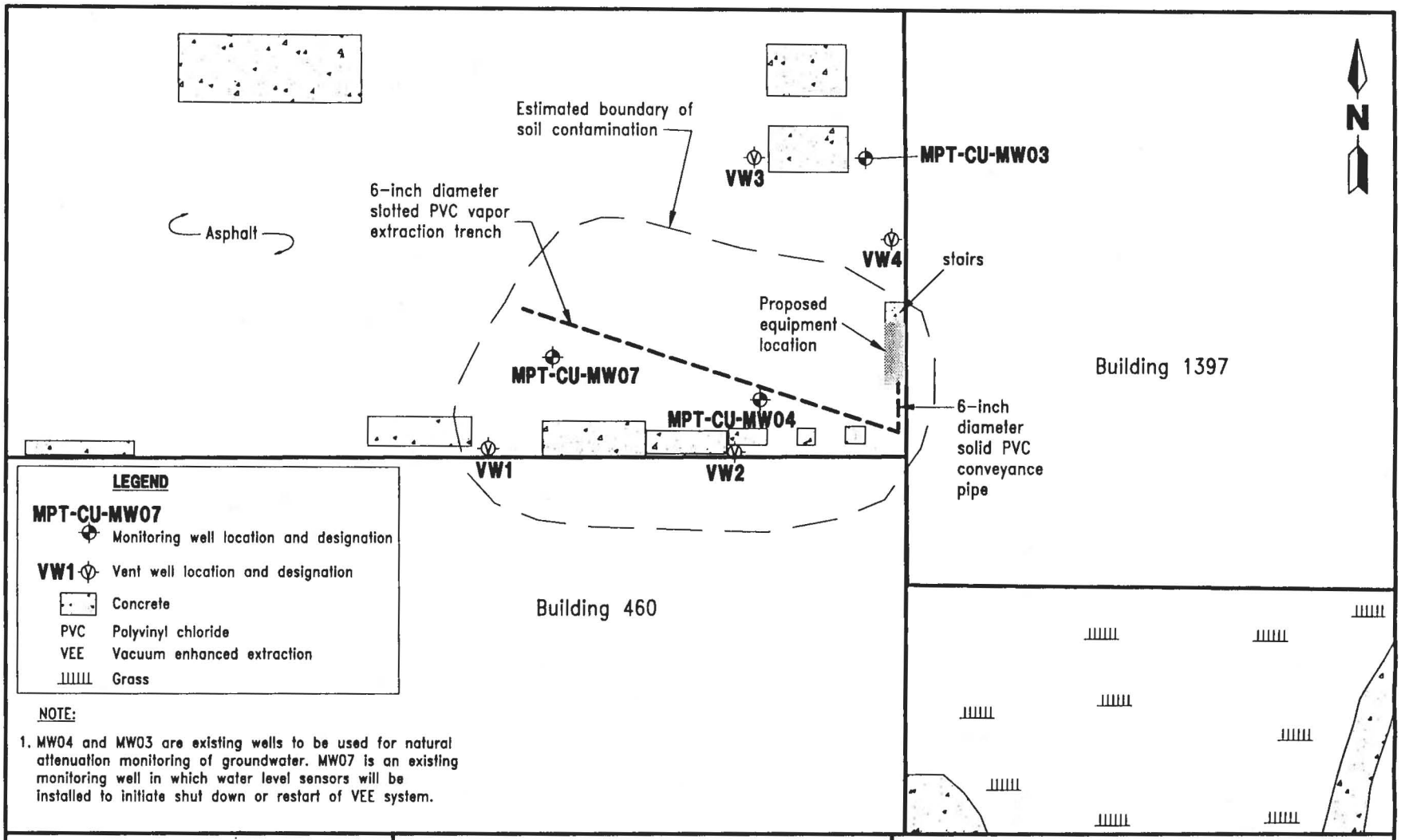

FIGURE 4-1
PROPOSED LAYOUT OF VACUUM ENCHANCED EXTRACTION SYSTEM BUILDING 460

REMEDIAL ACTION PLAN
BUILDINGS 460 AND 1587

U.S. NAVAL STATION
MAYPORT, FLORIDA

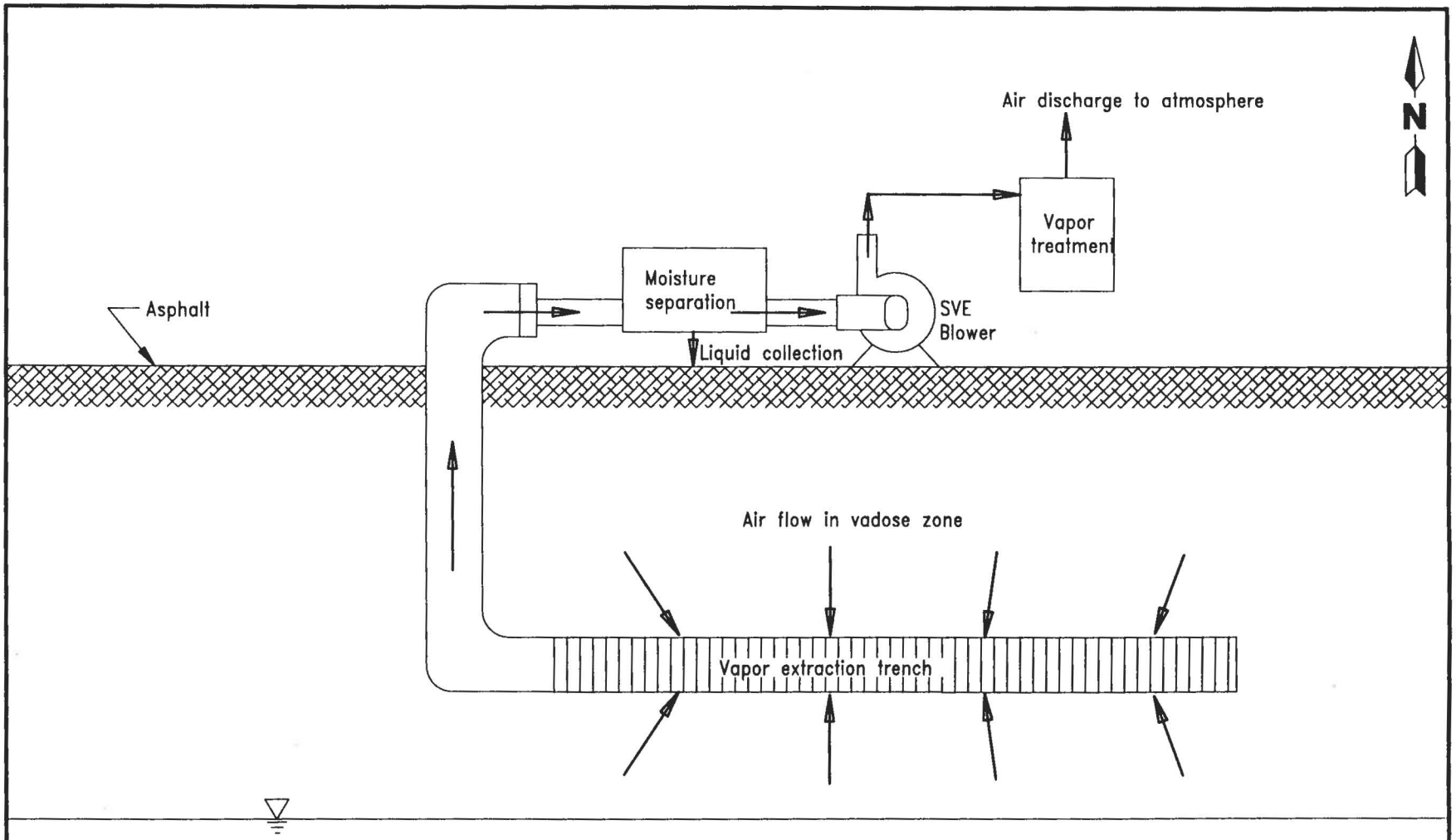

NOT TO SCALE

LEGEND

SVE	Soil vapor extraction
→	Vapor flow
▽	Water table

K:\02536\02536-18\RAP\02536522.DWG, VC-VC 02/08/99 09:24:41, AutoCAD R14

FIGURE 4-2
VACUUM ENHANCED EXTRACTION SYSTEM SCHEMATIC

REMEDIAL ACTION PLAN
BUILDINGS 460 AND 1587

U.S. NAVAL STATION
MAYPORT, FLORIDA

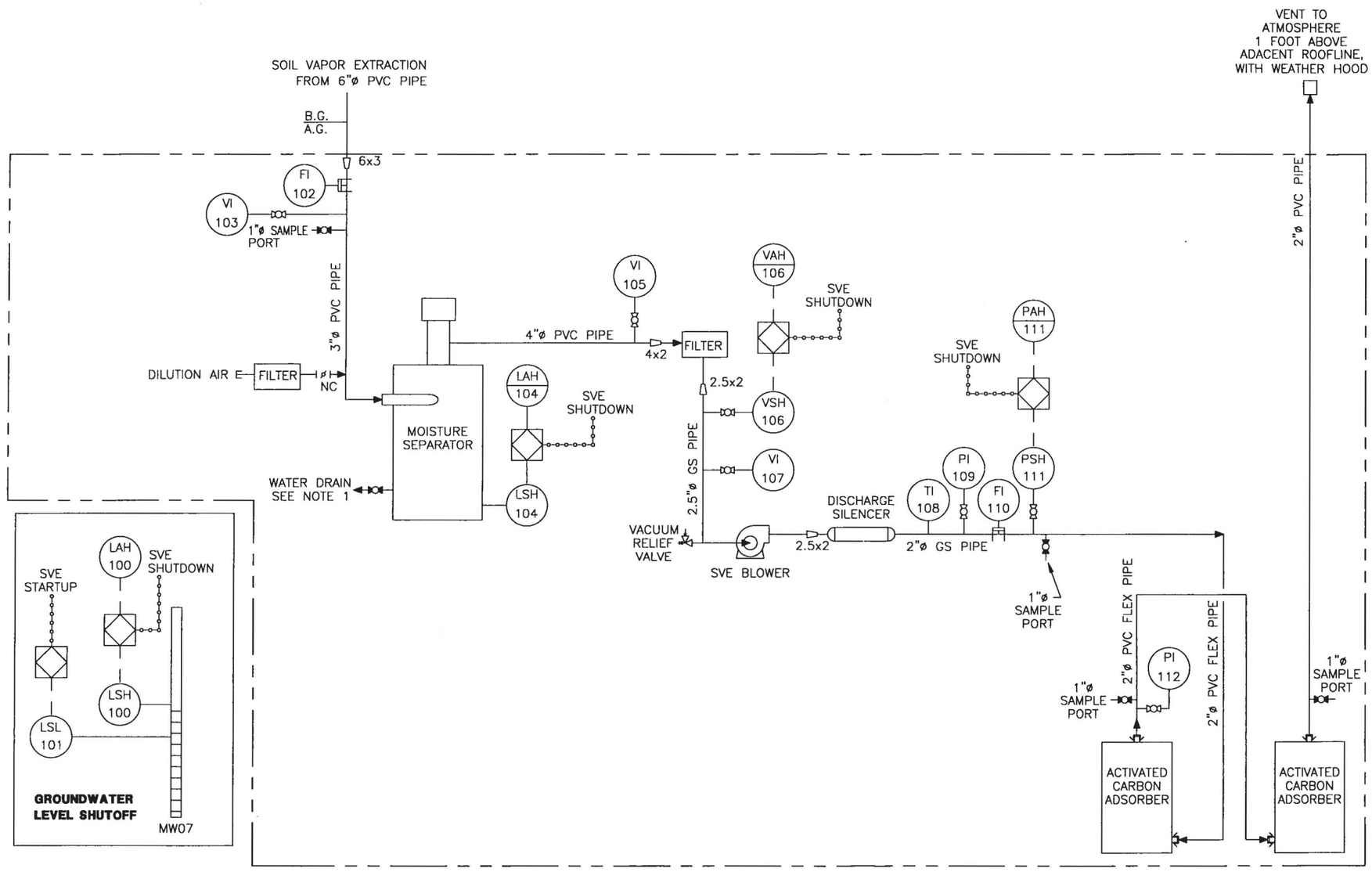

LEGEND

- SLAB LIMIITS
- PIPING
- ELECTRICAL CONNECTION
- CONTROL SYSTEM DATA LINK
- BALL VALVE
- CLOSED BALL VALVE
- BUTTERFLY VALVE
- ø DIAMETER
- REDUCER
- QUICK DISCONNECT
- ANEMOMETER PORT (NC)
- PLC FUNCTION
- FRONT OF PANEL MOUNTED INSTRUMENT
- LOCALLY MOUNTED INSTRUMENT

A.G.	ABOVE GRADE
B.G.	BELOW GRADE
FI	FLOW INDICATOR
GS	GALVANIZED STEEL
LAH	LEVEL ALARM HIGH
LSH	LEVEL SWITCH HIGH
NC	NORMALLY CLOSED
PAH	PRESSURE ALARM HIGH
PI	PRESSURE INDICATOR
PLC	PROGRAMMABLE LOGIC CONTROL
PSH	PRESSURE SWITCH HIGH
PVC	POLYVINYL CHLORIDE
SVE	SOIL VAPOR EXTRACTION
TI	TEMPERATURE INDICATOR
VAH	VACUUM ALARM HIGH
VI	VACUUM INDICATOR
VSH	VACUUM SWITCH HIGH

NOTES:

1. PROVIDE MEANS TO DRAIN MOISTURE SEPARATOR CONTENTS INTO 20" HIGH BUCKETS.
2. USE SCHEDULE 40 GALVANIZED CARBON STEEL (GS) PIPE AND SCHEDULE 80 PVC PIPE WHERE SHOWN.

FIGURE 4-3
PIPING AND INSTRUMENTATION DIAGRAM
BUILDING 460

REMEDIAL ACTION PLAN
BUILDINGS 460 AND 1587

U.S. NAVAL STATION
MAYPORT, FLORIDA

K:\02536\02536-16\RAP\02536521.DWG, VC-VC 02/09/99 10:43:41, AutoCAD R14

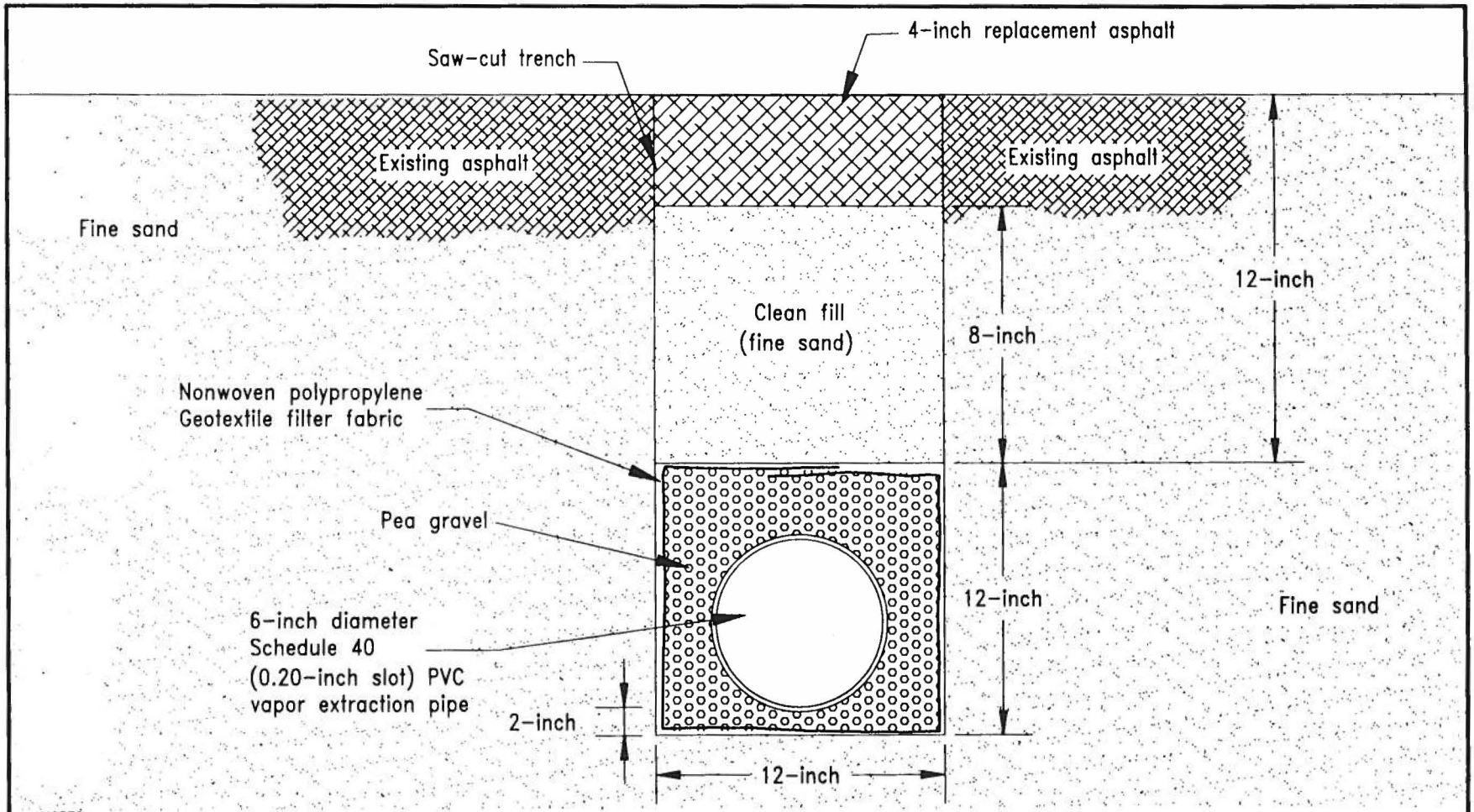

NOTES:
1. Wiring from water level sensors in MW07 to the programmable logic control panel to be installed in extraction trench.
2. Install 6-inch diameter conveyance piping in an identical trench to that shown. Pea gravel not required for conveyance piping. Slope conveyance piping to drain toward slotted polyvinyl chloride (PVC) section (S=0.25% min.).
3. Compact clean fill in 4-inch lifts.
4. Pea gravel shall meet gradation requirements of Florida Department of Transportation Specification 901-1.4.

NOT TO SCALE

FIGURE 4-4
VAPOR EXTRACTION TRENCH DETAIL
BUILDING 460

K:\02536\02536-16\RAP\02536523.DWG, VC-VC 02/09/99 10:26:27, AutoCAD R14

REMEDIAL ACTION PLAN
BUILDINGS 460 AND 1587

U.S. NAVAL STATION
MAYPORT, FLORIDA

FINAL DRAFT

4.1.2.3 **Blower** A regenerative vacuum blower shall be used for extraction of soil vapor from the VET. Based on the flow rate calculations included in Appendix C-1, the blower should be capable of operating at a flow rate of 200 ft^3/min, at 50 inches of water pressure. The operating parameters for the blower are 200 standard cubic feet per minute (scfm) at 58 inches of water column. This blower requires a 7.5-horsepower motor and operates on 230 volt, three-phase alternating current electric power. The maximum inlet air temperature for the blower is 120 degrees Celsius (°C) and the maximum outlet temperature is 140°C.

The vacuum blower will be equipped with pressure and vacuum gauges, adjustable pressure relief valve, a flow meter, and a thermometer. The blower will be explosion proof, and will be hard wired to the control panel. The blower will extract soil vapor from the VET continuously 24 hours a day, 7 days a week, barring system shutdown.

4.1.2.4 **Logic Control Panel** A logic control panel is recommended to diagnose any conditions that cause the SVE system to shut down. The control logic will initiate shutdown of the system in the following situations: pressure or temperatures exceeding those set by the manufacturer for the vacuum blower motor, high liquid level in the moisture separator tank, high groundwater table, and temperatures exceeding those set by the granular activated carbon (GAC) manufacturer. The logic control panel will also restart the system when the forementioned conditions are rectified. The panel will be equipped with a run totalizer in hours.

4.1.2.5 **Enclosure** The SVE system compound shall be assembled inside a pre-engineered metal building to minimize noise pollution and protect the system components from the elements. The building shall be of self-framing interlocking panel design utilizing the roof and wall panels as the primary structural supporting members, and shall conform to Standard Building Code. The building should be secured to the underlying asphalt with foundation anchors, and shall have a plywood floor to which the treatment system equipment will be anchored. The building should have at least one ventilation intake vent and one locking door.

4.1.2.6 **Granular Activated Carbon** Two 55-gallon containers of vapor-phase coconut shell GAC shall be installed in series. The canisters are constructed of steel with epoxy internal coatings and PVC internals. Based on experience at similar sites with similar contaminants, it is estimated that the two 55-gallon containers of GAC will be sufficient for treatment of the extracted soil vapor for the 30 days required by Chapter 62-770.700 (5)(e), FAC. The canisters should be capable of processing 200 ft^3/min of soil vapor. Arrangements should be made with the remediation contractor regarding regeneration or disposal of canisters containing spent carbon.

4.1.2.7 **Utility Requirements** Electric service is the only utility required to operate the SVE system. The electrical requirements for the system include three-phase, 230 volts to operate the blower, and a single-phase, 120-volt, 20-amp distribution circuit to operate the control logic instrumentation and lights inside the system enclosure. The mechanical room in the northeast corner of Building 460 is a potentially accessible source of power for the SVE system. All electrical work shall be done by a State of Florida licensed electrician.

4.1.2.8 **Groundwater Table Sensors** In order to prevent extraction of groundwater due to a fluctuating water table elevation, water-level sensors shall be installed in existing monitoring well MW07, which is near the location of the VET (Figure 4-1). A high level sensor will initiate shutdown of the SVE system when groundwater rises to a level of 3.5 feet bls or shallower, and a second sensor will cause the system to restart once groundwater levels have dropped to 4 feet bls. The sensors may be raised or lowered as appropriate based on actual operating conditions.

4.1.2.9 **Air Vent Wells** The contaminated soil at Building 460 is entirely overlain by an impermeable surface, and the nearest grassy area is east of Building 460, approximately 70 feet from the center of the contaminated soil area (Figure 4-1). Therefore, four air vent wells will be installed at varying radial distances from the VET along its length to allow ambient air into the vadose zone (Figure 4-1). The air vents will be used for the dual purpose of collecting vacuum readings within the vadose zone during monitoring of the system. A cap may be placed on the aboveground end of the air vent pipe with a hole drilled for insertion of a vacuum gauge. Thus, it is anticipated that the vacuum readings obtained on these wells will serve to establish the effective radius of influence from the VET. Construction details of the air vent wells and vapor observation probes are shown on Figure 4-5.

4.1.3 System Layout The 6-inch slotted PVC in the VET will be connected to 6-inch solid PVC conveyance piping. The conveyance piping will run aboveground to the system compound enclosure (Figure 4-1). The main supply line connecting the vapor extraction piping to the aboveground components of the system will be of 4-inch galvanized steel piping. A flow meter port and vacuum meter will be installed on the vacuum supply line to monitor the overall efficiency of the SVE process. The flow meter shall be an insertion type pitot tube with multiple holes for averaging velocity and should be scaled in scfm appropriate to flow rate. The SVE system will also contain a filter, silencer, and dilution air valve.

A sample port will also be installed on the vacuum supply line to collect pre-treatment vapor samples. After soil vapor is extracted from the vadose zone, it will pass through a moisture separator tank with a float level switch that will activate the control panel to shut down the system when the tank is full. Soil vapor will exit the moisture separator and pass through two 55-gallon canisters in series, filled with coconut shell carbon for vapor treatment. The carbon canisters will be placed on the outlet side of the extraction blower.

The vapor emissions will be discharged to the atmosphere through a 2-inch exhaust stack with a hood to protect from rain. The discharge of the exhaust stack should terminate at a height at least 1 foot above the roofline of Building 1397, adjacent to the treatment compound. If the exhaust stack abuts Building 1397, it will require elbows to circumvent the approximately 4-foot roof overhang.

4.1.4 Site-Specific Limitations to Remediation Remedial activities at Building 460 will interfere with vehicle traffic in the parking lot area, which overlies the contaminated soil. Care should be taken to isolate the construction areas and minimize interference with routine activities associated with the facility. Existing subsurface features may impede installation of the SVE system at Building 460. A professional survey to verify locations of site utilities was

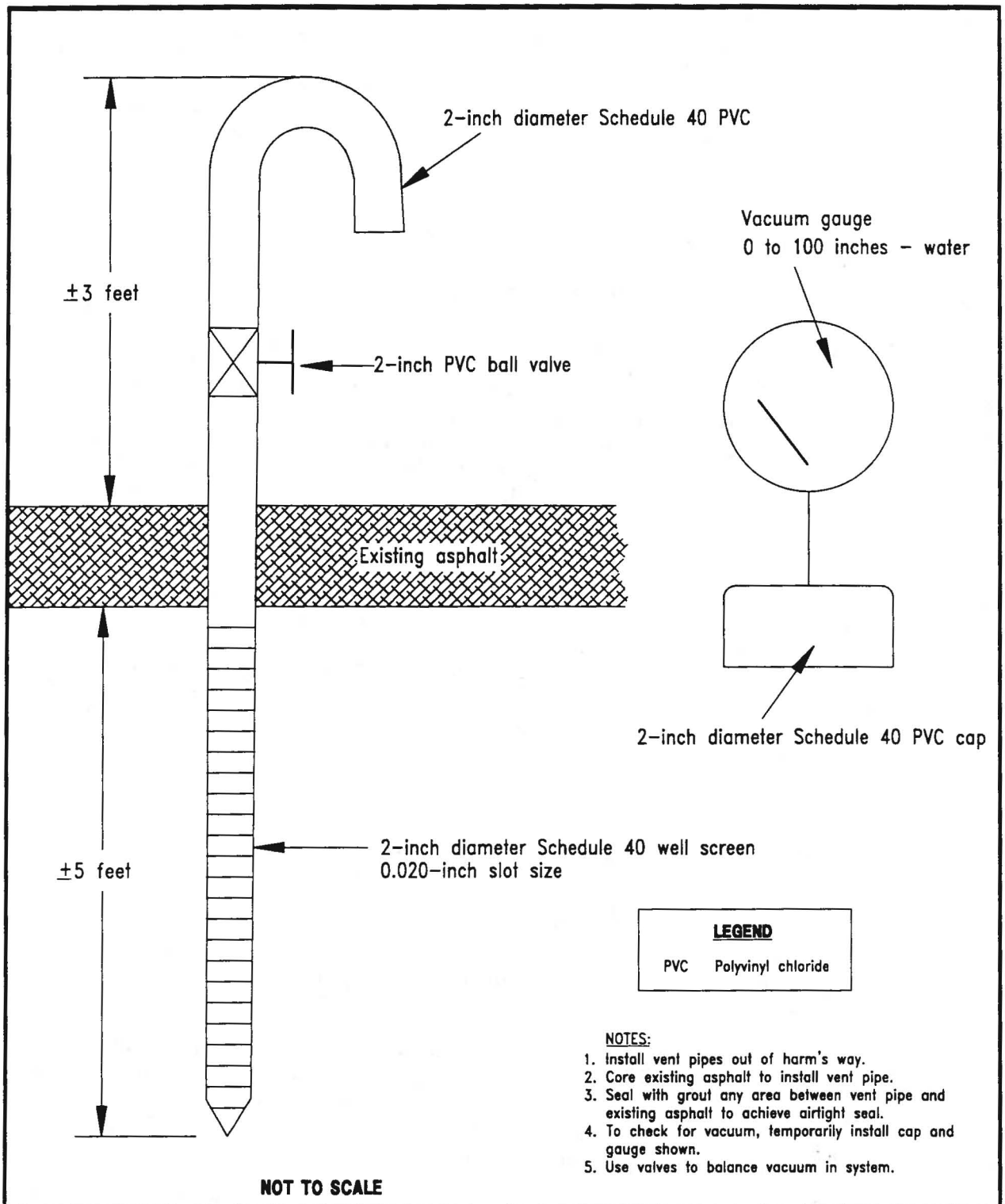

FIGURE 4-5
VENT PIPE AND VAPOR OBSERVATION PROBE DETAIL
BUILDING 460

K:\02536\02536-16\RAP\02536525.DWG, VC-VC 02/09/99 13:19:07, AutoCAD R14

REMEDIAL ACTION PLAN
BUILDINGS 460 AND 1587

U.S. NAVAL STATION
MAYPORT, FLORIDA

not conducted for this report. Utility drawings at the NAVSTA Mayport map vault were reviewed, but no maps were found showing buried utilities in the area of soil contamination. However, active or inactive subsurface obstructions may be present. Therefore, hand digging may be required to prevent damage to subsurface utilities. The remediation contractor will be responsible for locating all underground utilities prior to initiation of remedial activities.

The contaminated soil at Building 460 is entirely overlain by pavement. Pavement cutting will be necessary for installation of the VET and the air vent wells.

Due to the potential for a very shallow groundwater table at Building 460, special design considerations have be incorporated to prevent groundwater from being drawn into the vapor extraction well. The water table sensors were discussed in Paragraph 4.1.1.2.

4.1.5 System Start-up and Reporting Operation of the SVE system should be initiated within 120 days of approval of this RAP (Chapter 62-770.700 (9), FAC). A vapor extraction pilot study was not conducted prior to the preparation of this RAP; therefore, it will be necessary to conduct start-up testing of the vapor extraction system to ensure that system components are functioning correctly within the prescribed operating parameters. The following mechanical components should be checked during system start-up, and any necessary adjustments should be made:

- venting blower is functioning correctly and meets the flow requirements at the stated vacuum conditions;
- piping is sound and leakproof;
- carbon off-gas treatment system functions properly; and
- instrumental and control components operate properly (various operating conditions should be simulated to test alarm conditions).

The start-up testing program will consist of a vacuum pumping test of up to 8 hours in which vacuum pressures and flow rates will be measured. Based on the results of this testing program, the extraction rates necessary to achieve remedial goals will be determined.

Within 120 days of initiating SVE at Building 460, "as-built" drawings of the remediation system shall be submitted by the Navy to the FDEP, including any operating parameters different from those included in this RAP. A summary of system start-up activities shall be submitted with the engineering drawings. Status reports must be submitted to FDEP annually during operation of the system, and should include system operating parameters, performance monitoring data, an estimation of the contaminant mass removed from the site, an evaluation of system effectiveness, and a recommendation regarding continued operation of the system.

4.1.6 System Monitoring Following start-up, scheduled system monitoring shall be performed in order to assess the effectiveness of the SVE system. Concentrations of both recovered vapors and posttreatment emissions (until discontinued) shall be monitored weekly for the first month, monthly for the next two months, and quarterly thereafter, unless two consecutive sampling events do not show exceedances of applicable air quality standards (Chapter 62-770.700 (9)(i), FAC).

The influent and effluent vapor samples shall be collected and preserved according to protocol in 40 Code of Federal Regulations (CFR) Part 60, Appendix A, Method 18, Section 7.1, Section 7.4, or Method 0030/5040 of the Test Methods for Evaluation Solid Waste, Physical/Chemical Methods, SW 846, 3rd Edition. The samples shall be analyzed for VOC hydrocarbons in accordance with 40 CFR Part 60, Appendix A, Method 18, Section 7.

Off-gas treatment shall remove vapor emissions such that less than 13.7 pounds per day (lbs/day) of total hazardous air pollutants (HAPs) (FDEP, 1998a). Due to the potential for highly concentrated air emissions initially, treatment is required for the first 30 days of system operation (Chapter 62-770 (5)(a), FAC). Air emissions treatment may be discontinued after 30 days if the HAPs emission rate is less that 13.7 lbs/day. The concentration of HAPs in vapor emissions samples should be measured using USEPA Method 18. It is anticipated that air emissions will be less than 13.7 lbs/day, and treatment of extracted soil vapor will be discontinued after the required 30-day period.

The overall performance of SVE system will be evaluated based on the data obtained for the monitoring parameters listed below.

- Vapor flow rates from the VET
- Influent and effluent vapor concentrations during application of SVE
- Vacuum pressure readings at the inlet side of the system and after the GAC canisters
- Vacuum readings at vent wells located in the contamination area during application of SVE

The above performance monitoring data will be collected on the same schedule as the extracted soil vapor samples.

4.1.7 Confirmatory Soil Sampling Based on the vapor extraction system calculations contained in Appendix C-1, it is estimated that remediation of the contaminated soil should be complete in 5 months. However, the SVE system should be operated for a minimum period of one year. At the end of one year of operation, if contaminant mass emissions are steady, the following sampling procedures shall be performed to determine whether or not SVE should be discontinued (FDEP, 1998a).

Soil samples will be collected from representative areas of the contaminated vadose zone and screened using an OVA. Five samples will be collected in the area of contaminated soil. Two of the five samples shall be collected in the proximity of SB-2 and SB-6, as samples screened from those soil borings during the CAR Addendum had concentrations of 300 ppm and 205 ppm, respectively (Figure 2-4). The remaining three samples shall be evenly distributed within the area of soil contamination. Samples shall be collected at 2-foot intervals to the depth of the water table and screened with an OVA.

If the soil samples collected for OVA screening give negligible results (less than 10 ppm), soil samples shall be collected for laboratory analyses. Two samples shall be collected from the locations of SB-2 and SB-6 at a depth just above the water table and analyzed for TRPH (FL-PRO Method) and PAHs (USEPA

Method 8310) to confirm that the concentrations of the COCs (i.e., TRPH and benzo(a)anthracene) do not exceed State SCTLs (Chapter 62-770, FAC, Table IV, Direct Exposure I, residential use). The analytical results for the soil samples will also be compared to the leachability criteria contained in Chapter 62-770, FAC, Table IV. If the concentration of any analyzed compound exceeds the lower value of their respective Direct Exposure I or leachability value, the sample will be analyzed according to the SPLP method (USEPA Method 1312). The results of the SPLP analysis will be compared to GCTLs to determine whether or not the contaminants in soil could potentially leach to the underlying groundwater. If the concentrations of all analyzed compounds are below their respective Direct Exposure I or leachability values, SPLP analysis is unnecessary and there are no longer COCs for soil leaching. If the cleanup target levels for the COCs are achieved, vapor extraction may be discontinued.

A summary report will be prepared that will include recommendations for continuing or discontinuing the SVE system. Recommendations will be based on FDEP's established conditions for consideration (FDEP, 1998a).

4.1.8 Groundwater Monitoring Concurrent SVE activities at Building 460, a groundwater monitoring program for natural attenuation shall be initiated, in accordance with Chapter 62-770.690, FAC. Revisions for Chapter 62-770, FAC (effective September 27, 1997) incorporated specific criteria for determining whether or not monitoring for natural attenuation is an acceptable remedial strategy for groundwater. The groundwater at Building 460 meets the five criteria for a "Level 1 Evaluation," which is a simplified justification that natural attenuation is an appropriate cleanup strategy (Chapter 62-770.690 (1)(a) through (e), FAC). The five conditions of a Level 1 Evaluation, as they relate to Building 460 are as follows: 1) no free product, 2) contaminated soil does not exist (contaminated soil will be treated by vapor enhanced extraction), 3) groundwater contaminants are not migrating (sampling results from 1995 and 1998 do not suggest that groundwater contamination has migrated), 4) overall decrease in contaminant mass (contaminant concentrations in MW03 and MW04 were lower in 1998 than in 1995 - refer to Table 2-4), and 5) the site is anticipated to achieve NFA levels as a result of natural attenuation within 5 years. The only contaminant exceeding State GCTLs is MTBE (36 $\mu g/\ell$). Although MTBE does not biodegrade as readily as other petroleum hydrocarbons, according to Table IX, "Natural Attenuation Evaluation Procedures" (FDEP, 1998), MTBE at concentrations up to 350 $\mu g/\ell$ can be expected to meet NFA guidelines (35 $\mu g/\ell$ for MTBE) within 5 years. With the exception of Condition 2, each of these conditions has been met. Groundwater monitoring will begin concurrent with SVE because soil contamination is limited. Monitored natural attenuation is considered an appropriate cleanup strategy for groundwater.

The groundwater monitoring program for Building 460 is designed to evaluate the progress and effectiveness of natural attenuation to reduce contaminants and retard their migration. In the event that data collected under this long-term monitoring plan indicate that intrinsic remediation is not occurring or is insufficient to protect human health and the environment or that contaminant reduction rates indicate more costly monitoring than anticipated, a contingency plan will be developed to augment or replace the intrinsic remediation alternative.

4.1.9 Monitoring Well Locations Monitoring wells to be used for groundwater monitoring at Building 460 are already in place within, and downgradient of, the

groundwater plume (as it was delineated based on the CA in May 1995). Existing monitoring well MW04 will be used as a source area well because the maximum concentration of the COC in groundwater at Building 460 (i.e., MTBE) was detected this well. Groundwater flow direction at the site was interpreted on January 28, 1998, as north-northeast; therefore, MW03 is an appropriate downgradient well for monitoring potential plume migration (Figure 4-1). Monitoring wells MW01, MW02, and MW07 will be used for background analyses during groundwater sampling (Figure 2-5).

4.1.10 Groundwater Sampling Groundwater sampling will be conducted quarterly for the first year and annually for four additional years, if necessary, to verify that the contaminant mass and mobility are being effectively reduced by natural attenuation. Water-level measurements will be collected during each sampling event. Groundwater samples will be collected during each sampling event from the designated source area and downgradient well and analyzed for the COC in groundwater at Building 460 (i.e., MTBE), using the test method shown in Table 4-1. Natural attenuation parameters listed in Table 4-1 will be collected from the source well (MW04) and hydraulically downgradient monitoring well (MW03) and background monitoring wells MW01, MW02, and MW07, and analyzed during each sampling event to establish trends and supporting evidence that natural attenuation is occurring.

If two consecutive sampling events show that the concentration of MTBE is below the State GCTL, natural attenuation monitoring may be considered complete. A Site Rehabilitation Completion Report shall be completed and submitted to the FDEP for review (Chapter 62-770.690 (8), FAC). On the other hand, if the data collected at any time during the monitoring period indicate plume migration or a risk to human health, the sampling frequency will be adjusted accordingly and/or a contingency plan will be developed, approved by FDEP, and implemented.

4.1.11 Reporting Within 60 days of each groundwater sampling event, a report will be prepared and submitted to SOUTHNAVFACENGCOM and FDEP, in accordance with Chapter 62-770.690 (7)(e), FAC. The report will include the laboratory report of sample analytical results, the chain of custody, a summary table and site map of the analytical results, water table elevation information (including a summary table and flow map), and recommendations for future actions.

4.2 BUILDING 1587: SOIL EXCAVATION AND DISPOSAL/GROUNDWATER MONITORING

4.2.1 Soil Excavation Boundaries Excavation boundaries for Building 1587 have been delineated with the intent of removing the contaminated soil from the site. Contaminated soil is defined in Chapter 62-770.200(4), FAC, as soil contaminated with petroleum or petroleum products or their chemical constituents to the extent that applicable SCTLs defined in Chapter 62-770, FAC, Table IV, are exceeded.

Vertical. The vertical limits of the soil excavation will be dependent upon the water table elevation at the time of excavation. The vertical extent of the excavation should be sufficient to remove contaminated soil in the unsaturated zone, the capillary fringe, and the water table smear zone. In order to accomplish removal of the capillary fringe and smear zone, the soil excavation shall continue to a depth approximately 1 foot

Table 4-1
Groundwater Monitoring Parameters,
Buildings 460 and 1587

Remedial Action Plan
Buildings 460 and 1587
U.S. Naval Station
Mayport, Florida

Analysis	Method/ Reference[2]	Data Use	Sample Volume, Sample Container, Sample Preservation	Field or Fixed-Base Laboratory
Chemical(s) of Concern				
Volatile Organic Compounds (VOCs)	602	Building 460: Method of analysis that includes MTBE (COC for groundwater) Building 1587: Method of analysis that includes benzene (COC for groundwater)	Collect water samples in a 40 mℓ VOC vial; cool to 4°C; add hydrochloric acid to pH 2.	Fixed
Natural Attenuation Parameters[1]				
Temperature	170.1, Direct reading thermometer	Well development; biological processes are temperature dependent	Conduct *in situ*	Field
Oxygen	Dissolved oxygen meter or HACH kit	The oxygen concentration is a data input to most biological models; concentrations less than 1 mg/ℓ generally indicate an anaerobic pathway	Collect 300 ml of water in biochemical demand bottles; analyze immediately; alternately measure dissolved oxygen *in situ*	Field
pH	150.1, Direct reading meter	Biological processes are pH sensitive	Collect 100 to 250 mℓ of water in a glass or plastic container; analyze immediately	Field
Conductivity	120.1, Direct reading meter	General water quality parameter used to verify that site samples are obtained from the same groundwater system	Collect 100 to 250 mℓ of water in a glass or plastic container; analyze immediately	Field
Alkalinity	310.1, Manual titrimetric	General water quality parameter used to verify that site samples are obtained from the same groundwater system and to measure the buffering capacity of groundwater	Collect 250 mℓ of water in a glass or plastic container; analyze within 6 hours	Field
Ferrous (Fe^{+2})	HACH DR 850	May indicate an anaerobic degradation process due to depletion of oxygen, nitrate, and manganese	Collect 100 mℓ of water in a glass container and follow kit instructions	Field

See notes at end of table

Table 4-1 (Continued)
Groundwater Monitoring Parameters, Buildings 460 and 1587

Remedial Action Plan
Buildings 460 and 1587
U.S. Naval Station
Mayport, Florida

Analysis	Method/ Reference[2]	Data Use	Sample Volume, Sample Container, Sample Preservation	Field or Fixed-Base Laboratory
Nitrate (NO_3^{-1})	HACH DR 850	Substrate for microbial respiration if oxygen is depleted	Collect up to 40 mℓ of water in a glass or plastic container and follow kit instructions	Field
Sulfate (SO_4^{-2})	HACH DR 850	Substrate for anaerobic microbial respiration	Collect up to 40 mℓ of water in a glass container and follow kit instructions	Field
Redox potential	Standard Methods A2580 B	The redox potential of groundwater provides information on environmental conditions and is used to interpret the nature and state of chemical compounds and biological conditions; the redox potential may range from 200 mV to less than -400 mV	Collect 100 to 250 mℓ of water in a glass container, filling container from bottom; analyze immediately	Field
Carbon dioxide	HACH[3] CO_2 titrimetric kit	Elevated levels of free carbon dioxide dissolved in groundwater above background concentrations could indicate an aerobic mechanism for bacterial degradation	Collect 100 mℓ of water in a glass container; analyze immediately	Field
Methane	8015 modified; Headspace analysis with GC/FID or TCD	The presence of methane indicates biological degradation via an anaerobic pathway utilizing CO_2 as the electron acceptor	Collect water samples in 40 mℓ VOC vials with butyl gray/Teflon®-lined caps; cool to 4°C	Fixed

[1] Groundwater analytical protocol adapted from Table 2.1 in the *Technical Protocol for Implementing the Intrinsic Remediation with Long-Term Monitoring Option for Natural Attenuation of Dissolved-Phase Fuel Contamination in Ground Water* (Wiedemeier, Todd H., 1995).
[2] Method refers to U.S. Environmental Protection Agency test methods.
[3] HACH refers to the HACH Company catalog.

Notes: MTBE = methyl tert-butyl ether.
COC = chemicals of concern.
mℓ = milliliter.
°C = degrees Celsius.
mg/ℓ = milligrams per liter.
mV = millivolts.
GC/FID = gas chromatograph per flame ionization detector.
TCD = thermal conductivity defecter.

below the measured water table level in a nearby well (e.g., MW04). The intent of removing soil in the water table smear zone is to eliminate exposure of groundwater to contaminated soil as the groundwater elevation fluctuates.

Depth to groundwater measurements were collected at Building 1587 on May 31, 1995, September 19, 1995, and January 29, 1998. For the purpose of estimating the vertical extent of the soil excavation, the average depth to groundwater from measurements collected May 31, 1995, was used. On that date, the water table was the deepest and represents a conservative depth for estimation of vertical excavation limits. On May 31, 1995, the average depth to groundwater in the monitoring wells at Building 1587 was 6.6 feet, or approximately 7 feet bls. Therefore, a depth of 8 feet was used to calculate the volume of soil to be excavated at Building 1587.

Horizontal. The lateral extent of contaminated soil to be excavated at Building 1587 is shown on Figure 4-6. Delineation of the soil excavation boundaries is based on both screening and analytical soil data. The excavation limits encompass soil borings SB-11, SB 21, and SB-22, which have had OVA readings in the vadose zone exceeding 50 ppm (SB-12 had a maximum OVA reading of 1,800 ppm on May 31, 1995, but on January 29, 1998, the OVA reading was only 3 ppm). The soil samples collected from the location of SB-11 on January 29, 1998 contained compounds at concentration above their respective SCTLs and GCTLs for leachability.

Both the northwest and eastern limits of the soil excavation area abut concrete structures (Figure 4-6). The concrete structures will be interpreted as limits of excavation, regardless of sample analytical results, to avoid damaging the structures. The total surface area of soil to be excavated is approximately 86 ft^2.

4.2.2 Confirmatory Soil Sampling Once the contaminated soil has been excavated, one sample shall be collected from each of the sidewalls of the excavation and submitted for laboratory analysis. The samples may be retrieved from the sidewalls using a backhoe bucket. The samples will be analyzed for TRPH (Fl-PRO Method), PAHs (USEPA Method 8310), and xylenes (USEPA Method 602) to confirm that the concentrations of the COCs (i.e., TRPH, benzo(a)anthracene, and total xylene) do not exceed State SCTLs (Chapter 62-770, FAC, Table IV, Direct Exposure I residential use). Total xylenes are included in the analyses because they were determined to be a COC for leaching based on sampling conducted during the CAR Addendum (Table 2-8). The analytical results for the soil samples should be compared to the leachability criteria contained in Chapter 62-770, FAC, Table IV. If the concentration of any analyzed compound exceeds the lower value of their respective Direct Exposure I or leachability value, the sample should be analyzed according to the SPLP method (USEPA Method 1312). The results of the SPLP analysis are compared to GCTLs to determine whether or not the contaminants in soil could potentially leach to the underlying groundwater. If the concentrations of all analyzed compounds are below their respective Direct Exposure I or leachability values, SPLP analysis is unnecessary, and there are no longer COCs for soil.

4.2.3 Soil Excavation Volume The total volume of soil to be excavated at Building 1587 is approximately 29 yd^3 (approximately 40 tons). Soil volume calculations, including a swell factor of 12 percent (for sand), are presented

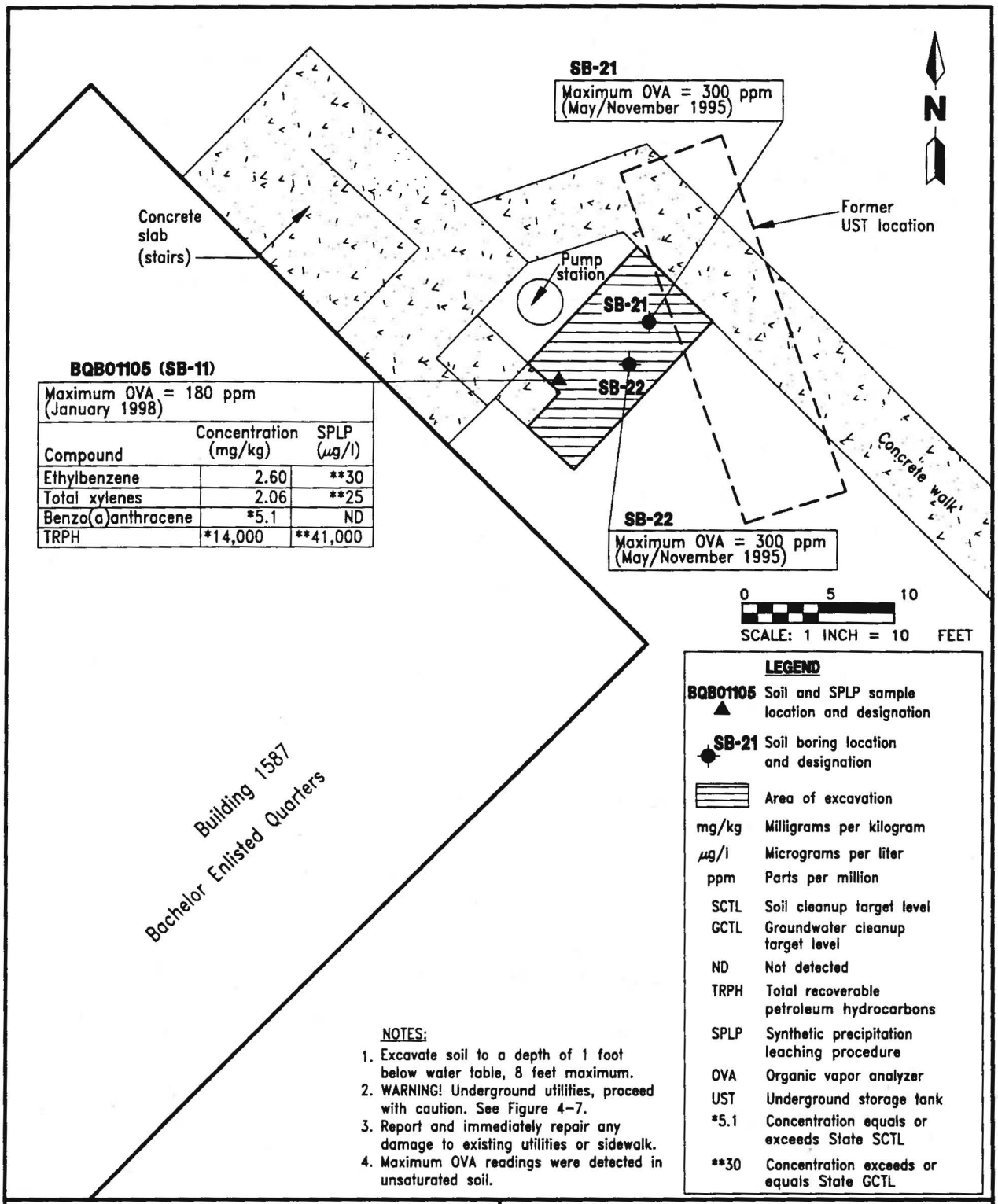

BQB01105 (SB-11)

Maximum OVA = 180 ppm (January 1998)

Compound	Concentration (mg/kg)	SPLP (µg/l)
Ethylbenzene	2.60	**30
Total xylenes	2.06	**25
Benzo(a)anthracene	*5.1	ND
TRPH	*14,000	**41,000

FIGURE 4-6
BOUNDARY FOR SOIL EXCAVATION AT BUILDING 1587

K:\02536\02536-18\RAP\02536519.DWG, VC-VC 02/09/99 09:37:06, AutoCAD R14

REMEDIAL ACTION PLAN
BUILDINGS 460 AND 1587

U.S. NAVAL STATION
MAYPORT, FLORIDA

in Appendix B-2, Engineering Calculations. The actual volume of excavated soil may vary, based on the water table elevation at the time of excavation.

4.2.4 Excavation Procedures Excavation will be conducted using standard earthmoving equipment. The equipment operator should provide evidence of appropriate certifications as required by the Occupational Safety and Health Administration. Excavated soil should be loaded directly into roll-offs to prevent spreading of the contaminated soil at the site. If immediate disposal of contaminated media is not feasible, soil may be stockpiled for no more than 60 days (Chapter 62-770.300, FAC).

The excavation shall have sides sloped or shored in accordance with applicable standards to prevent unstable conditions during excavation, which could pose hazards to personnel or surrounding structures and pavements. Storm water runon and runoff controls shall be implemented to prevent migration of sediment or contaminated storm water during site activities. Dust control shall also be implemented to prevent fugitive emissions during excavation and soil handling. Benchmarks, existing structures, sidewalks, utilities, and other cultural features shall be protected from excavation equipment, and if temporary removal is required, replacement shall be conducted during site restoration.

4.2.5 Site-Specific Limitations to Remediation Remedial activities at Building 1587 may interfere with foot traffic along the concrete walkway and stairs to the BEQ. Care should be taken to isolate the construction areas and minimize interference with routine activities associated with the facility. Existing subsurface features may impede soil excavation at Building 1587. A professional survey to verify locations of site utilities was not conducted for this report; however, active or inactive subsurface obstructions are present. Therefore, hand excavation may be required to prevent damage to subsurface utilities. Obstructions may include underground water lines, electric lines, and fuel lines. Subsurface features shown on Figure 4-7, including fuel oil lines associated with the UST and a water line, are based on facility record drawings dated August 1986. The new UST at Building 1587 was installed in July 1995. It is not known whether or not the utilities shown were left in place after installation of the new tank, or where fuel oil lines associated with the new tank are located. The remediation contractor will be responsible for locating all underground utilities prior to initiation of soil excavation. During all excavation and restoration operations, utility services will be managed in coordination with base personnel.

4.2.6 Disposal of Excavated Soil Excavated soil will be disposed of at a permitted landfill. Excavated soil may be disposed of at Trail Ridge Landfill in Baldwin, Florida, west of Jacksonville. After excavation is complete, one composite sample shall be collected from the soil for TCLP analysis in accordance with SW 846 Method 1311. The leachate shall be analyzed for lead (Method 3050/6010) and benzene (Method 8240). Results of the TCLP analysis are evaluated according to the waste characterization requirements of 40 CFR Part 261. Based on this evaluation, the contaminated soil shall be manifested and transported by a licensed transporter to the landfill. It may be desirable to characterize the soil for disposal purposes prior to excavation in order to limit the amount of time the roll-offs must be staged on site.

4.2.7 Site Restoration and Demobilization Backfilling activities shall be completed as appropriate to minimize groundwater infiltration into the open area

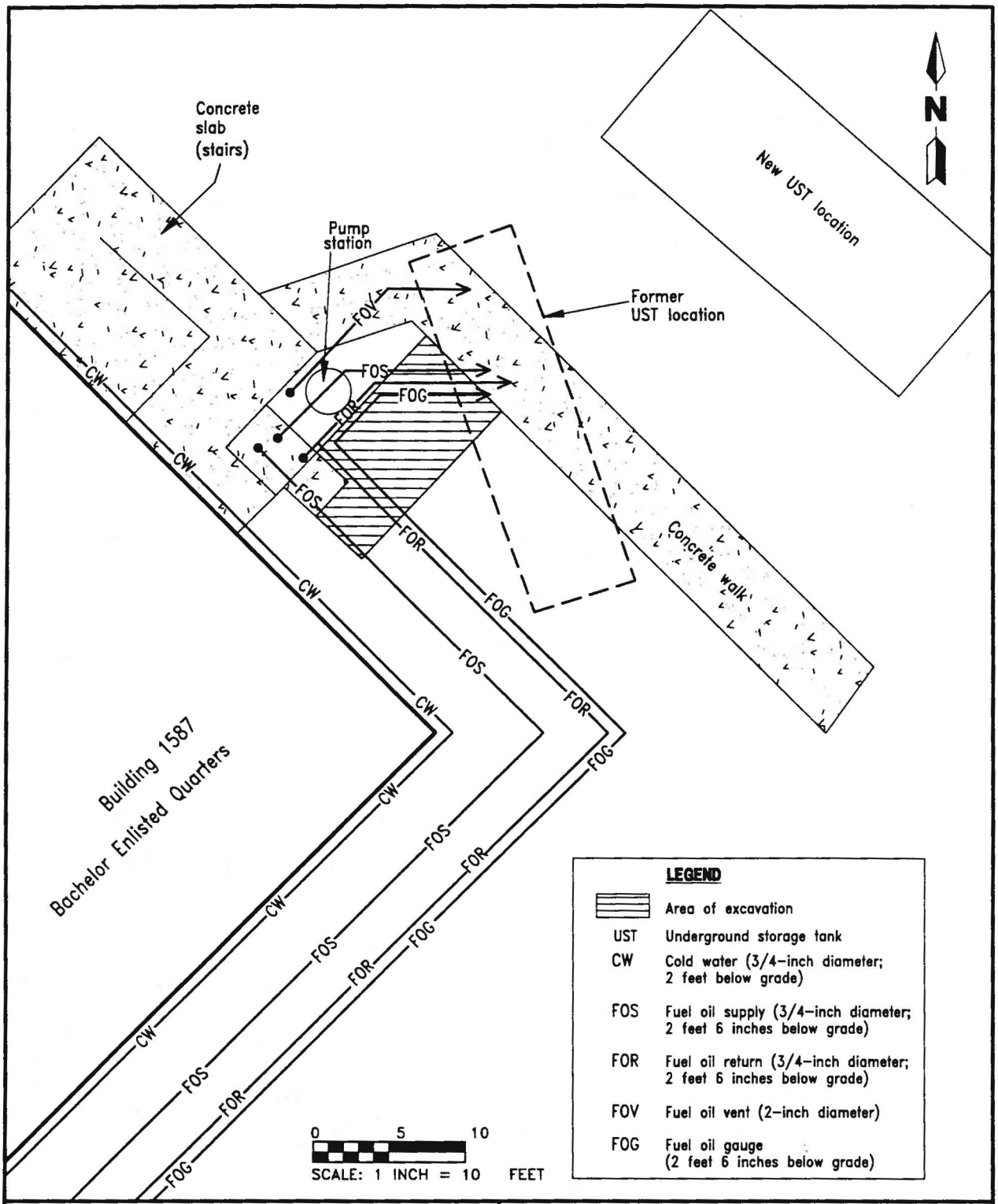

FIGURE 4-7
LOCATION OF UNDERGROUND UTILITIES
BUILDING 1587

K:\02536\02536-16\RAP\02536524.DWG, VC-VC 02/09/99 09:50:39, AutoCAD R14

REMEDIAL ACTION PLAN
BUILDINGS 460 AND 1587

U.S. NAVAL STATION
MAYPORT, FLORIDA

and disruption to facility operations. Backfilling shall not be put on hold awaiting analytical results of the excavation sidewall samples due to the hazards associated with an open excavation. Approximately 29 yd^3 (40 tons) of backfill material will be needed. Backfill should be field compacted to 90 percent standard proctor to conform with surrounding grade and return the site to its original condition.

Excavations shall be backfilled with material that is the same or a similar type as the surrounding soils. Certification is required from the backfill source prior to delivery that the backfill is free of petroleum hydrocarbon contamination. The final grade of the backfill will match the existing vegetated surrounding grade, and the completed backfill will be sodded or reseeded. The final grading of the repaired surface course will conform to the prevalent surface drainage patterns of the surrounding area.

During backfill operations, utility services will be disconnected in coordination with base personnel, if necessary. After completion of backfilling procedures, any benchmarks, existing structures, sidewalks, utilities, and other remaining cultural features that were damaged during remedial activities will be repaired or replaced. All lines and grades will be verified after all equipment and materials have been removed from the site and work is complete. Final review of project documentation as well as a walkover of the site will be conducted to ensure satisfactory completion of the project prior to leaving the site.

Within 60 days of completion of the soil excavation at Building 1587, a source removal report will be submitted to the FDEP. Information included in the report should include volume and weight of soil removed, documentation of disposal, site map showing the dimensions of the soil excavation and sample locations, a summary table and raw analytical results of samples collected, and depth to groundwater at time of excavation (Chapter 62-770.300 (3)(b), FAC).

4.2.8 Groundwater Monitoring Following completion of soil excavation and backfilling activities at Building 1587, a groundwater monitoring program for natural attenuation shall be initiated, in accordance with Chapter 62-770.690, FAC. In the CAR Addendum for Building 1587, HLA recommended the overdevelopment of MW04 (refer to Figure 2-8) for up to 72 hours, and FDEP concurred with this recommendation. In a letter of response to FDEP's comments on the CAR Addendum; however, HLA points out that after remediation of the petroleum contaminated soil, monitoring only for natural attenuation is likely to be an appropriate action for groundwater at the site (Appendix A).

Revisions for Chapter 62-770, FAC, (effective September 27, 1997) incorporated specific criteria for determining whether or not monitoring for natural attenuation is an acceptable remedial strategy for groundwater. The groundwater at Building 1587 meets the five criteria for a "Level 1 Evaluation," which is a simplified justification that natural attenuation is an appropriate cleanup strategy (Chapter 62-770.690(1)(a) through (e), FAC). The five conditions of a Level 1 Evaluation, as they relate to Building 1587, are as follows: 1) no free product, 2) contaminated soil does not exist (contaminated soil will be excavated and disposed of), 3) groundwater contaminants are not migrating (sampling results from 1995 and 1998 indicate that groundwater contamination has not migrated), 4) overall decrease in contaminant mass (with the exception of low concentrations of MTBE, contaminant concentrations in MW04 and MW06 were lower in 1998 than in 1995 - refer to Table 2-9), and 5) the site is anticipated to achieve NFA levels

as a result of natural attenuation within 5 years (the only contaminant exceeding State GCTLs is benzene [1.7 $\mu g/\ell$] and according to Table IX, "Natural Attenuation Evaluation Procedures" [FDEP, 1998b] benzene at concentrations up to 100 $\mu g/\ell$ can be expected to meet NFA guidelines [1.0 $\mu g/\ell$ for benzene] within 5 years). Each of these five conditions has been met at Building 1587; therefore, monitored natural attenuation is considered an appropriate cleanup strategy for groundwater.

The groundwater monitoring program for Building 1587 is designed to evaluate the progress and effectiveness of natural attenuation to reduce contaminants and retard their migration. In the event that data collected under this long-term monitoring plan indicate that intrinsic remediation is not occurring or is insufficient to protect human health and the environment or that contaminant reduction rates indicate more costly monitoring than anticipated, a contingency plan will be developed to augment or replace the intrinsic remediation alternative.

4.2.9 Monitoring Well Locations Monitoring wells to be used for groundwater monitoring at Building 1587 are already in place within and hydraulically downgradient of the groundwater plume (as it was delineated based on the CA in May 1995). Existing monitoring well MW04 will be used as a source area well. Although MW06 was the second well sampled during the supplemental assessment of Building 1587, the groundwater flow direction was interpreted on January 29, 1998, as north-northeast. Therefore, MW07 is better situated as a downgradient well for monitoring potential plume migration (Figure 2-8). Monitoring wells MW01, MW02, and MW05 will be used for background analyses during groundwater monitoring.

4.2.10 Groundwater Sampling Groundwater sampling will be conducted quarterly for the first year and annually for four additional years, if necessary, to verify that the contaminant mass and mobility are being effectively reduced by natural attenuation. Water-level measurements will be collected during each sampling event. Groundwater samples will be collected during each sampling event from the designated source area and downgradient well and analyzed for the COC in groundwater at Building 1587 (i.e., benzene) using the test method shown in Table 4-1. Natural attenuation parameters listed in Table 4-1 will be collected from the source well (MW04), downgradient monitoring well (MW07), and background wells MW01, MW02, and MW05 and analyzed during each sampling event to establish trends and supporting evidence that natural attenuation is occurring.

If two consecutive sampling events show that the concentration of benzene is below the State SCTL, natural attenuation monitoring may be considered complete, and a site rehabilitation completion report shall be completed and submitted to the FDEP for review (Chapter 62-770.690 (8), FAC). On the other hand, if the data collected at any time during the monitoring period indicate plume migration or a risk to human health, the sampling frequency will be adjusted accordingly and/or a contingency plan will be developed, approved by FDEP, and implemented.

4.2.11 Reporting Within 60 days of each groundwater sampling event, a report will be prepared and submitted to SOUTHNAVFACENGCOM, in accordance with Chapter 62-770.690 (7)(e), FAC. The report will include the laboratory report of sample analytical results, the chain of custody, a summary table and site map of the analytical results, water table elevation information (including a summary table and flow map), and recommendations for future actions.

5.0 COST ESTIMATE

The cost estimate is inserted following Appendix E in those report copies that require it and has been omitted in others. This was done to facilitate Navy procurement procedures.

6.0 SCHEDULE

It is estimated that remediation activities at both Buildings 460 and 1587 can begin within 8 to 12 weeks of notification to proceed. Preparation of any necessary construction work plans to implement this RAP will be prepared by the remedial action contractor.

7.0 BUILDING 460 DOCUMENTATION

An Operation and Maintenance (O&M) manual should be provided at the time of installation and start-up of the SVE system at Building 460. The manual should provide all necessary information for the proper O&M of the system by someone other than the builder. The O&M manual will include, at a minimum, the following:

- system start-up instructions
- system shutdown instruction
- electrical and controls wiring diagrams
- system as-built drawings
- equipment manufacturers' product operation manuals for each piece of equipment
- equipment warranty and guarantee information
- equipment service and repair vendor phone numbers
- system troubleshooting guide
- equipment and system maintenance schedule and checklist
- material safety data sheets for materials used or being treated
- monitoring schedule, including sampling frequency, sampling locations, sampling procedure, required analyses, parameters for field measurement, and vapor monitoring instruments
- instructions for maintaining a site activity log

The manual should be assembled and bound in a manner suitable for use in the field. It is recommended that the system be checked once per week following start-up activities.

REFERENCES

ABB Environmental Services, Inc (ABB-ES). 1996a. *Contamination Assessment Report, Credit Union, Building 460, U.S. Naval Station, Mayport, Florida.* Prepared for Southern Division, Naval Facilities Engineering Command (SOUTHNAVFACENGCOM), North Charleston, South Carolina (February).

ABB-ES. 1996b. *Contamination Assessment Report, Bachelor Enlisted Quarters, Building 1587, U.S. Naval Station, Mayport, Florida.* Prepared for SOUTHNAVFACENGCOM, North Charleston, South Carolina (February).

Florida Department of Environmental Protection (FDEP). 1998a. "Vacuum Extraction, Multi-Phase Extraction, Pilot Studies, Air Emissions Treatment and Monitoring Requirements," BPSS-4, Petroleum Cleanup Program, Remedial Action Guidelines, Bureau of Petroleum Storage Systems (May 1998).

FDEP. 1998b."Natural Attenuation Evaluation Procedures", BPSS-11, Petroleum Cleanup Program, Remedial Action Guidelines, Bureau of Petroleum Storage Systems (May 1998).

Harding Lawson Associates (HLA). 1998a. *Contamination Assessment Report Addendum, Credit Union, Building 460, U.S. Naval Station, Mayport, Florida.* Prepared for SOUTHNAVFACENGCOM, North Charleston, South Carolina (March).

HLA. 1998b. *Contamination Assessment Report Addendum, Bachelor Enlisted Quarters, Building 1587, U.S. Naval Station, Mayport, Florida.* Prepared for SOUTHNAVFACENGCOM, North Charleston, South Carolina (July).

G.B. Robbins, Inc. 1995. Tank Closure Assessment Report, Tank ID #1587, FDEP FAC #168626008. U.S. Naval Station, Mayport, Florida (July).

Tonner-Navarro and Roberts. 1998. Development of Soil Cleanup Target Levels (SCTLs), Chapter 62-785, Florida Administrative Code. Prepared for the Division of Waste Management, Florida Department of Environmental Protection (April 3)

Wiedemeier, T.H., Wilson J.T., Kampbell, D.H., Miller, R.N., and Hansen, J.E. 1995. "Technical Protocol for Implementing the Intrinsic Remediation with Long-Term Monitoring Option for Natural Attenuation of Dissolved-Phase Fuel Contamination in Ground Water", Air Force Center for Environmental Excellence (November 11).

APPENDIX A

CORRESPONDENCE WITH FLORIDA DEPARTMENT OF ENVIRONMENTAL PROTECTION

Department of Environmental Protection

Lawton Chiles
Governor

Twin Towers Building
2600 Blair Stone Road
Tallahassee, Florida 32399-2400

Virginia B. Wetherell
Secretary

March 1, 1996

Mr. Byas Glover
Department of the Navy, Southern Division
Naval Facilities Engineering Command
2155 Eagle Drive, PO Box 190010
North Charleston, SC. 29419-9010

file:mayport\ b460car.doc

RE: Review of Contamination Assessment Report for Building 460, U.S. Naval Station Mayport

Dear Mr. Glover:

I have reviewed the above Contamination Assessment Report dated February 1996 (received February 26, 1996). Although the site has minimum petroleum-constituent ground water contamination, I am concerned that a significant amount of excessively contaminated soil remains at the site. Please resample the monitoring wells at the site for EPA Method 602 and EPA Method 610 constituents and submit a CAR Addendum which includes these data and a proposed course of action.

If you have questions or require further clarification, please contact me at (904) 921-9994.

Sincerely,

James H. Cason, P.G.
Remedial Project Manager

cc: Brian Cheary, FDEP Northeast District
Jerry Young, City of Jacksonville
Terry Hansen, ABB-ES
Cheryl Mitchell, NAVSTA Mayport

ABB

June 7, 1996 Doc. No. 08567-04

Florida Department of Environmental Protection
2600 Blair Stone Road
Tallahassee, Florida 32301-2400
ATTN: Mr. Jim Cason

Subject: Contamination Assessment Report Addendum for Building 460, U.S. Naval Station Mayport, Florida

Dear Mr. Cason:

ABB Environmental Services, Inc. (ABB-ES) was contracted by Southern Division, Naval Facilities Engineering Command (SOUTHNAVFACFENGCOM) to prepare a Contamination Assessment Report (CAR) to assess the horizontal and vertical extent of soil and groundwater contamination at Building 460, U.S. Naval Station Mayport, Florida. A CAR was submitted to FDEP in February 1996. In response to FDEPs comments to the CAR dated March 1, 1996, ABB-ES representatives resampled the eight monitoring wells at the Building 460 site in March 1996. The purpose of this sampling event was to gather current groundwater information at the site.

The site is the former location of two underground storage tanks (USTs) used to store #2 fuel oil. The USTs were removed in March 1994 and approximately 300 tons of excessively contaminated soil were removed during the tank closure. Building 460 presently houses the Navy Federal Credit Union, a U.S. Postal Service branch, a library, and classrooms.

Groundwater samples were collected March 25 and 26, 1996, from the eight site monitoring wells. After low-flow purging, groundwater samples were collected from each well with Teflon bailers and shipped via overnight carrier to Quality Analytical Laboratories, Inc., an FDEP- and USEPA-approved analytical laboratory. The samples were analyzed for volatile organic compounds (VOCs) by USEPA Methods 601/602, polynuclear aromatic hydrocarbons (PAH) by USEPA Method 610, total recoverable petroleum hydrocarbons (TRPH) by USEPA Method 418.1, ethylene dibromide (EDB) by USEPA Method 504.1, and lead by USEPA Method 239.2. Groundwater laboratory analyses are included in the Attachment and compounds detected are summarized in Table 1. Table 1 also provides a comparison of groundwater analytical data collected in June 1995 which was included in the CAR.

Volatile organic compounds (VOC) were detected only in groundwater samples collected from MW-4 at concentrations below the State regulatory levels for No Further Action (NFA). VOCs were previously detected in groundwater samples collected from MW-1, MW-3, and MW-8 in June 1995; however, they were not detected in the samples collected March 25 and 26, 1996.

ABB Environmental Services Inc.

Berkeley Building
2590 Executive Center Circle East
Tallahassee Florida 32301

Telephone (904) 656-1293
Fax (904) 877-0742

Total naphthalenes and total PAH (excluding napthalenes) were detected only in groundwater samples collected from monitoring well MW-4. Total naphthalenes concentrations detected in groundwater samples collected from MW-4 ranged from 32.4 micrograms per liter (μg/L) to 34 μg/L. These concentrations are higher than those observed during the June 1995 sampling event; however, they are less than the State regulatory level for source monitoring wells of 2,000 μg/L required for a monitoring only plan (MOP). Total PAHs (excluding naphthalenes) ranged from 7.92 μg/L to 11.73 μg/L in the groundwater samples collected from MW-4. These are less than the State regulatory level of 20 times the method detection limit for a source monitoring well required for an MOP.

Based on the March 1996 groundwater sampling results ABB-ES recommends remediation of excessively contaminated soil by natural biodegration and Monitoring Only for this site. Groundwater samples will be collected quarterly from on site monitoring wells MW01, MW03, MW04, and MW08. The March 1996 sampling event would serve as the first quarter sampling for the monitoring plan. Samples collected from these wells will be shipped to an FDEP- and USEPA-approved analytical laboratory and analyzed for USEPA Methods 601/602 and 610. Upon receipt of groundwater analytical results after the fourth sampling episode (December 1996), ABB-ES will recommend no further action, continued monitoring, or, an additional IRA soil removal for the site.

If you agree with this recommendation please send a letter of notification to Byas Glover. Should you have any questions, or if additional information is required, please contact me or Joe Fugitt at (904) 656-1293.

Sincerely,

ABB ENVIRONMENTAL SERVICES, INC.

Terry Hansen, P.G.
Senior Task Order Manager

Joseph F. Fugitt
Joseph F. Fugitt
Professional Geologist
P.G. No. 1613
Date 6/7/96

Attachments

cc: Byas Glover, SDIV
Jan Bovier, NAVSTA Mayport
File

Harding Lawson Associates

November 13, 1998

Commanding Officer
Attn: Ms. Beverly Washington, CODE 18410
Department of the Navy, Petroleum Program
Southern Division - Naval Facilities Engineering Command
P.O. Box 190010
2155 Eagle Drive
North Charleston, SC 29419-9010

SUBJECT: **Response to Florida Department of Environmental Protection (FDEP) Comments Concerning Contamination Assessment Report (CAR) Addenda for the Credit Union Building 460, and Bachelor Enlisted Quarters (BEQ) Buildings 1587 and 1586, U.S. Naval Station Mayport, Florida. Contract Task Orders (CTO) 77 and 119, CLEAN Contract No. N62467-89-D-0317.**

Dear Ms. Washington:

Below is a response to FDEP comments concerning CAR addenda for the Credit Union Building 460 (CTO 119), BEQ Building 1587 (CTO 119), and BEQ Building 1586 (CTO 77) (ABB environmental Services, Inc., [ABB-ES], 1998a, 1998b, and 1998c). The following is correspondence received from the FDEP.

- April 7, 1998, Correspondence from James H. Cason, P.G. Remedial Project Manager, FDEP, to Ms. Beverly Washington, Department of the Navy, Petroleum Program, Southern Division Naval Facilities Engineering Command (SOUTHNAVFACENGCOM), Subject: CAR Addendum, Credit Union Building 460, NAVSTA Mayport, Florida.

- October 22, 1998, Correspondence from James H. Cason, P.G. Remedial Project Manager, FDEP, to Ms. Beverly Washington, Department of the Navy, Petroleum Program, SOUTHNAVFACENGCOM, Subject: CAR Addendum, BEQ Building 1587, NAVSTA Mayport, Florida.

- April 6, 1998, Correspondence from James H. Cason, P.G. Remedial Project Manager, FDEP, to Ms. Beverly Washington, Department of the Navy, Petroleum Program, SOUTHNAVFACENGCOM, Subject: CAR Addendum, BEQ Building 1586, NAVSTA Mayport, Florida.

Below is a responses to FDEP's comments for each of the referenced sites.

Credit Union Building 460. In the FDEP correspondence dated April 7, 1998 concerning the Credit Union Building 460 CAR Addendum, Mr. Cason stated "I have reviewed the above document dated March 8, 1998 (received April 3, 1998). The document indicates the presence of polynuclear aromatic hydrocarbons which either exceed the State soil cleanup target levels (SCTLs), or the method detection

limit exceeded the SCTLs, and which contained total recoverable petroleum hydrocarbons (TRPH) which exceeded SCTLs. "No Further Action without conditions or restrictions" is not applicable to the site because of the presence of the above soil contaminants. Please prepare a remedial action plan (RAP) which adequately addresses the soil contamination."

Below is a summary of findings from assessment activities conducted at the Credit Union Building 460.

Soil

- Organic Vapor Analysis (OVA) measurements taken from approximately 1.5 to 6.5 feet beneath the land surface (bls) suggest that approximately 740 cubic yards of excessively contaminated soil (OVA measurements greater than 50 parts per million [ppm]) are present at the site.

- Concentrations of TRPH (6,400 and 8,700 milligrams per kilogram [mg/kg]) and benzo(a)anthracene (2.2 and 5.9 mg/kg]) detected in subsurface soil samples (collected from approximately 3.5 feet bls) exceed their respective Direct Exposure I (residential) SCTLs (350 and 1.4 mg/kg, respectively).

- Concentrations of TRPH (6,400 and 8,700 milligrams per kilogram [mg/kg]) and benzo(a)anthracene (5.9 mg/kg]) detected in subsurface soil samples (collected from approximately 3.5 feet bls) exceed their respective Direct Exposure II (industrial) SCTLs (2,500 and 5.2 mg/kg, respectively).

- Based on the OVA and analytical soil sample data it would appear that soil beneath a depth of approximately 1.5 feet bls has been excessively contaminated by petroleum related constituents.

- Synthetic Precipitation Leaching Procedure (SPLP) results from subsurface soil samples (collected from approximately 3.5 feet bls) indicate naphthalene could leach from vadose zone soil at a concentration(s) (0.028 milligrams per liter, [mg/l]) that would exceed the State's Groundwater Cleanup Target Level (GCTL) (0.02 mg/l).

- The petroleum contaminated soil (an area approximately 45 by 90 foot), is covered by asphalt (an engineering control), and is located adjacent to, and possibly beneath Buildings 460 and 1397 (Please refer to Figure 3-1 in the CAR addendum (ABB-ES, 1998a).

Groundwater

- Methyl tert butyl ether (MTBE) (36 ppb) was the only petroleum related organic compound detected in groundwater samples above the State's GCTL of 35 ppb (January 28, 1998). MTBE, if present, was not detected in the soil samples collected on the same date.

- Benzo(a)anthracene was detected in the groundwater sample collected on January 28, 1998, from monitoring well MPT-CU-MW04, which is at the former location of the underground storage tank (UST), at a

concentration (0.13 μg/l) that did not exceed its State GCTL (0.2 μg/l).

- TRPH, if present, was not detected in groundwater samples collected from monitoring well MPT-CU-MW04 on June 1, 1995, and March 25, 1996). Analysis for TRPH was not requested for the sample collected on January 28, 1998.

- Naphthalene was detected in the groundwater sample collected on January 28, 1998, from monitoring well MPT-CU-MW04, at a concentration (17 μg/l) that did not exceed its State GCTL (20 μg/l).

- Review of previous groundwater data from monitoring wells MPT-CU-MW03 and MPT-CU-MW04 collected on June 1, 1995, March 25, 1996, and January 28, 1998, suggest that the concentrations of petroleum related organic compounds are decreasing.

- Petroleum in the form of free product was not detected on the surface of the water table at the monitoring well locations.

- The depth to groundwater at the site has ranged from 2 to 6 feet bls, and the groundwater flow direction appears to be northeast toward Building 1397. Based on observed groundwater level fluctuations, some of the petroleum contaminated soil will, at various times, be beneath the water table.

Harding Lawson Associates, Inc. (HLA) concurs with the comment made by FDEP. This concurrence is based on the following:

A "No Further Action" decision is not allowed under Chapter 62-770.680 (1)(b) Florida Administrative Code (FAC), where excessively contaminated soil (OVA measurements greater than 50 ppm) exist, and under Chapter 62-770.680 (1)(c)(2) FAC where petroleum related constituents exceed their respective SCTLs and leachability criteria.

Additionally, A "No Further Action" decision with an institutional (e.g., land use control) or engineering control (e.g., pavement) does not appear to be appropriate under Chapter 62-770.680 (2)(b) FAC because of the presence of excessively contaminated soil; or under Chapter 62-770.680 (c)(1) FAC where alternative cleanup criteria are justified, the petroleum related constituents are not allowed to exceed their respective level II (industrial exposure) SCTL, and leachability criteria.

Alternate concentrations for groundwater cleanup based on "Low Yield" criteria are applicable under Chapter 62-770.680(4)(1)(a) FAC when the average hydraulic conductivity value is less than 1 foot per day (ft/day). These criteria are not likely to apply to the Credit Union Building 460 site based on hydraulic conductivity values of 5.17 to 6.63 ft/day.

Therefore, it is recommended that a remedial action plan (RAP) should be prepared to evaluate applicable remedial alternatives for the Credit Union Building 460 site soil. Remedial alternatives that are suggested to be evaluated in the RAP

include excavation and disposal, soil vapor extraction, bioventing, phytoremediation and soil flushing.

After remediation of the petroleum contaminated soil, it is likely that monitoring only for natural attenuation would be the appropriate recommendation for the petroleum related organic compounds detected in groundwater samples. The decrease in the concentrations of petroleum related constituents over time in the groundwater samples provides evidence that suggest natural attenuation has been occurring since the removal of the UST. It is recommended that monitored natural attenuation in Chapter 62-770.690 FAC be evaluated after the soil has been remediated. Sampling for natural attenuation parameters should be conducted at the site to substantiate that this natural process is occurring and could occur within a five year period as stipulated under Chapter 62-770.690 (1)(e) FAC. Natural attenuation of the petroleum related organic compounds in groundwater may also be augmented by the injection of a chemical such as Oxygen Release Compound® (ORC), which is manufactured by Regenesis.

It is also likely that the site pavement is functioning as an engineering control that minimizes surface water (rainfall) infiltration, and therefore, limits leaching of petroleum related constituents from the subsurface soil to groundwater. Based on the results of the SPLP test, removal or degradation (e.g., cracking, potholes etc.), of the pavement may result in mobilization of petroleum related constituents to groundwater.

<u>BEQ Building 1587</u>. The following are comments made in the correspondence dated October 22, 1998, by FDEP to SOUTHNAVFACENGCOM in reference to the CAR Addendum for BEQ Building 1587, NAVSTA Mayport, Florida.

1. Soil analysis in Table 3-1, values for TRPH and benzo(a)anthracene exceeded the SCTL values in Table IV, Chapter 62-770 FAC. In Table 3-2, values for SPLP samples were incorrectly compared to the values in column 3 (titled "Table V") of Table IV; they should be compared to the values in Table V, GCTLs (the contractor, HLA, and I have discussed this since the report was produced and have eliminated this confusion for future evaluations). When this comparison is done, the value for TRPH of 41 mg/l is shown to exceed the GCTL of 5 mg/l. Of the three samples that were subject to chemical analysis, this sample (SB-11) was from the location of the highest OVA reading (180 ppm). The reasonable conclusion seems to be that the soil at that location is contributing to groundwater contamination at the site.

2. Groundwater analysis in Table 3-3, I agree that the data for monitoring well MW04 indicates that reduction of contaminants, with benzene only slightly higher than the MCL in the January 1988 sampling event.

3. According to Figure 3-3, monitoring well MW04 is downgradient from soil boring SB-11. I suggest that the Navy conduct limited soil removal in the vicinity of SB-11, verifying the adequate removal by OVA screening and TRPH analysis.

4. Following removal of soil (Comment 3), I concur with the proposal to overdevelop monitoring well MW04 for not more than 72 hours, followed by

sampling and analysis for EPA method 602 constituents plus MTBE and TRPH. Please document the disposition of the groundwater that is removed from the well during development.

5. Please document the results of your actions is a Site Assessment Report Addendum including revised site recommendations, if appropriate.

Below is a summary of finding from assessment activities conducted at the BEQ Building 1587.

Soil

- OVA measurements taken from approximately 3.5 to 6.5 feet bls suggest that approximately 50 cubic yards of excessively contaminated soil (OVA measurements greater than 50 ppm) are present at the site.

- One subsurface soil sample (collected from approximately 5 feet bls) contained TRPH (14,000 mg/kg) and benzo(a)anthracene (5.1 mg/kg]) at a concentration that exceeded their respective Direct Exposure I (residential) SCTLs (350 and 1.4 mg/kg, respectively).

- One subsurface soil sample (collected from approximately 5 feet bls) contained TRPH (14,000 mg/kg) and benzo(a)anthracene (5.1 mg/kg) at a concentration that exceeded the Direct Exposure II (industrial) SCTL for TRPH (2,500 mg/kg) and equaled the Direct Exposure II SCTL for benzo(a)anthracene (5.1 mg/kg).

- Based on the OVA and analytical data it would appear that soil beneath a depth of approximately 2 feet bls has been contaminated by petroleum related constituents.

- SPLP results from subsurface soil samples (collected from approximately 3.5 feet bls) suggest that ethylbenzene, xylene, and TRPH could leach from vadose zone soil at a concentration(s) (0.03, 0.025, and 41 mg/l, respectively) that would equal or exceed the State's Groundwater Cleanup Target Level (GCTL) (0.03, 0.02, and 5 mg/l).

- The petroleum contaminated soil (a circular area approximately 15 feet in diameter) is located in a grass covered area that is adjacent to the stair well to Building 1587 (Please refer to Figure 3-1 in the CAR addendum (ABB-ES, 1998b). A concrete walkway is located on the north and east sides of the petroleum contaminated soil.

Groundwater

- Benzene is the only petroleum related organic compound that has been detected at concentrations (concentrations ranging from 1.7 to 3.2 μg/l) that exceed the State GCTL (1.0 μg/l) in groundwater samples collected from monitoring wells located at the former UST location and hydraulically downgradient from the petroleum contaminated soil.

- Ethylbenzene has been detected (concentrations ranging from 1.5 to 16 μg/l) in groundwater samples from the same locations as benzene, but at concentrations that do not exceed the State GCTL (30 μg/l).

- Xylenes were detected (concentrations ranging from 3.2 to 4.5 μg/l) only in groundwater samples collected from the monitoring well located at the former UST at concentrations that do not exceed the State GCTL (20 μg/l).

- TRPH, if present, has not been detected in groundwater samples collected from the BEQ Building 1587 site.

- MBTE was detected (concentrations ranging from 1.1 to 1.4 μg/l) in groundwater samples from monitoring wells located hydraulically downgradient from the petroleum contaminated soil at concentrations that do not exceed the State GCTL (35 μg/l).

- Polynuclear aromatic hydrocarbons (PAHs), if present, have not been detected in groundwater samples at concentrations exceeding their respective detection limits.

- Review of groundwater analytical data from monitoring well MPT-BQ-MW04 collected on May 31, 1995, and January 29, 1998, suggest that the concentrations of petroleum related organic compounds are decreasing.

- Petroleum in the form of free product was not detected on the surface of the water table at the monitoring well locations.

- The depth to groundwater at the site has ranged from 4 to 7 feet bls, and the groundwater flow directions appears to be toward the northern and eastern directions (away from Building 1587) (Please refer to Figures 5-3 and 5-4 in the CAR for BEQ Building 1587 (ABB-ES, 1996). Based on observed groundwater level fluctuations, some of the petroleum contaminated soil will, at various times, be beneath the water table.

HLA concurs with FDEP that remediation of the petroleum contaminated soil should be conducted. This concurrence is based on the following:

A "No Further Action" decision is not allowed under Chapter 62-770.680 (1)(b) Florida Administrative Code (FAC), where excessively contaminated soil (OVA measurements greater than 50 ppm) exist, and under Chapter 62-770.680 (1)(c)(2) FAC where petroleum related constituents exceed their respective SCTLs and leachability criteria.

Additionally, A "No Further Action" decision with an institutional (e.g., land use control) or engineering control (e.g., pavement) does not appear to be appropriate under Chapter 62-770.680 (2)(b) FAC because of the presence of excessively contaminated soil; or under Chapter 62-770.680 (c)(1) FAC where alternative cleanup criteria are justified, petroleum related constituents are not allowed to exceed their respective level II (industrial exposure) SCTL, and leachability criteria.

Alternate concentrations for groundwater cleanup based on "Low Yield" criteria are applicable under Chapter 62-770.680(4)(1)(a) FAC when the average hydraulic conductivity value is less than 1 foot per day (ft/day). These criteria are not likely to apply to the BEQ Building 1587 site based on hydraulic conductivity values that were obtained for the Credit Union Building, which is in the vicinity of BEQ Building 1587.

Therefore, it is recommended that an RAP should be prepared to evaluate applicable remedial alternatives for the BEQ Building 1587 site soil. Remedial alternatives that are suggested to be evaluated in the RAP include excavation and disposal, soil vapor extraction, bioventing, phytoremediation and soil flushing.

After remediation of the petroleum contaminated soil, it is likely that monitoring only for natural attenuation would be the appropriate recommendation for the petroleum related organic compounds detected in groundwater samples. The decrease in the concentrations of petroleum related constituents over time in the groundwater samples provides evidence that suggest natural attenuation has been occurring since the removal of the UST. It is recommended that monitored natural attenuation under Chapter 62-770.690 FAC be evaluated after the soil has been remediated. Sampling for natural attenuation parameters should be conducted at the site to substantiate that this natural process is occurring and could occur within a five year period as stipulated in Chapter 62-770.690 (1)(e) FAC. Natural attenuation of the petroleum related organic compounds in groundwater may also be augmented by the injection of a chemical such ORC, which is manufactured by Regenesis.

The recommendation to overdevelop monitoring well MW-04 may not be necessary because biodegradation has probably lowered the concentration of benzene to levels at or below the State GCTL of 1 μg/l. The reduction of the benzene concentration in monitoring well MW-04 may be confirmed when monitoring only for natural attenuation is performed after remediation of petroleum contaminated soil.

<u>BEQ (Building 1586)</u>. The following are comments made in the correspondence dated April 6, 1998, by FDEP to SOUTHNAVFACENGCOM in reference to the CAR Addendum for BEQ Building 1586, NAVSTA Mayport, Florida.

1. The site has minimal groundwater contamination which seems to be decreasing with time; free product was not observed during the last sampling event; excessively contaminated soil was indicated by reference to OVA data.

2. The Navy should consider an interim measure (IM) action to address the excessively contaminated soil. Alternatively, the Navy may want to consider obtaining three sets of soil samples from within the area of the contaminated soil, according to Chapter 62-770.600 (3)(e), as an indicator as to whether or not the soil should be addressed under an IM, or perhaps if the site can be considered for natural attenuation under Chapter 62-770.690, FAC.

Below is a summary of the finding from the assessment activities at the BEQ Building 1586.

Soil

- Approximately 270 cubic yards (353.08 tons) of excessively contaminated soil were excavated to a depth of approximately 6 feet bls and thermally treated in 1991.

- OVA measurements taken in September and November 1996, from approximately 2.5 to 5.5 feet bls in the excavation suggest that approximately 50 cubic yards of excessively contaminated soil (OVA measurements greater than 50 ppm) are present at the site.

- The petroleum contaminated soil is located in 15 foot by 20 foot area adjacent to Building 1586, and at an isolated area approximately 30 feet from the building (Please refer to Figure 3-2 in the CAR Addendum for BEQ Building 1586 (ABB-ES, 1998c). Approximately 65 cubic yards of excessively contaminated soil are present at the site.

- Some of the subsurface soil samples appeared to be saturated suggesting that the samples were collected at or slightly below the groundwater table. Therefore, it would appear that petroleum related constituents in groundwater have contaminated the subsurfaces soil through smearing in the capillary fringe and/or during fluctuations of the groundwater table.

Groundwater

- Benzene has been detected (concentrations ranging from 1.9 to 49 μg/l) at concentrations that exceed the State GCTL (1.0 μg/l) in groundwater samples collected from a monitoring well at the former UST location and hydraulically downgradient locations.

- Ethylbenzene has been detected (concentrations ranging from 1.4 to 36 μg/l) at a concentration that exceeded the State GCTL (30 μg/l) in a groundwater sample collected in 1994 from a monitoring well located hydraulically downgradient from the excavation area. Ethylbenzene has not been detected at concentrations exceeding the State GCTL since 1994.

- Xylene has been detected (concentrations ranging from 1.7 to 31 μg/l) at a concentration that exceeded the State GCTL (20 μg/l) in a groundwater sample collected in 1994 from a monitoring well at the former UST location. Xylene has not been detected at concentrations exceeding the State GCTL since 1994.

- Naphthalene has been detected (concentrations ranging from 2.2 to 52 μg/l) at concentrations that exceeded the State GCTL (20 μg/l) in groundwater samples collected in 1994 and 1996 from a monitoring well located hydraulically downgradient from the excavation area.

- Lead has been detected (concentrations ranging from 8.3 to 28.2 μg/l) in groundwater samples collected in 1994 at concentrations that exceeded the State GCTL (15 μg/l) in groundwater. Low-flow purging and

sampling was not used during this sampling event, it is likely that sediment in the samples biased the analytical results.

- Review of groundwater analytical data from samples collected in 1994, 1996, and 1997 from monitoring wells MPT-BE-MW02S, MPT-BE-MW04S, MPT-BE-MW06S, MPT-BE-MW07S, MPT-BE-MW08I, and MPT-BE-MW09S suggest that the concentrations of petroleum related organic compounds are decreasing. One exception is the detection of naphthalene in groundwater samples collected in 1994 and 1996 at relatively similar concentrations of 50 and 52 $\mu g/l$.

- LNAPL has been detected in monitoring wells MPT-BE-MW04S (February 1996), MPT-BE-MW06S (February and September 1996), and MPT-BE-MW09S (February, September, November and December 1996; and March, July, August, September, and October 1997). LNAPL was not detected in monitoring well MPT-BEQ-MW09S on November 4, 1998. TRPH was the only petroleum related constituent detected in the groundwater sample collected from monitoring well MPT-BEQ-MW09S on November 4, 1998.

- The depth to groundwater at the site has ranged from 4.3 to 6.4 feet bls, and the groundwater flow direction appears to be in a northern direction (toward the north part of Building 1586) (Please refer to Figures 3-6 through 3-8 in the CAR Addendum for BEQ Building 1586 (ABB-ES, 1998c).

HLA does not concur with FDEP's comment recommending an interim action or additional sampling for the excessively contaminated soil, but does concur with considering the applicability of natural attenuation for the site groundwater.

HLA does not concur with the recommended soil actions because a removal action for soil has already been conducted at the site, and the source of the petroleum related constituents currently in the soil is most likely from smearing in the capillary fringe due to water table fluctuations. Because the petroleum related constituents detected in the soil are likely a result of groundwater contamination, it is reasonable to assume the natural biodegradation that is apparently occurring at the site will result in remediation of the petroleum related constituents in soil and groundwater. HLA recommends sampling for natural attenuation parameters at the site to substantiate natural attenuation is occurring and could reduce contaminant concentrations below State GCTLs within a five year period as stipulated under Chapter 62-770.690 (1)(e) FAC. Additionally, natural attenuation of the petroleum related organic compounds in groundwater may also be augmented by the injection of an ORC.

Alternate concentration for groundwater cleanup based on "Low Yield" criteria are applicable under Chapter 62-770.680(4)(1)(a) FAC when the average hydraulic conductivity value is less than 1 foot per day (ft/day). These criteria are not likely to apply to the BEQ Building 1586 site based on hydraulic conductivity values obtained for the Credit Union Building, which is in the vicinity of BEQ Building 1586.

Should you have with any questions or comments concerning the above information please contact us.

Sincerely,
Harding Lawson Associates

Michael J. Williams
Professional Geologist
P.G. No. 344

Lisa Routhier
Project Manager

cc: Randy Bishop, NAVSTA Mayport
Jim Cason, FDEP

References

ABB Environmental Services, Inc., (ABB-ES). 1996. Contamination Assessment Report (CAR) Bachelor Enlisted Quarters (BEQ) Building 1587, U.S. Naval Station (NAVSTA) Mayport (Final). prepared for Southern Division Naval Facilities Engineering Command (SOUTHNAVFACENGCOM), North Charleston, South Carolina. (February).

ABB-ES. 1998a. CAR Addendum Credit Union Building 460, U.S. Naval Station (NAVSTA) Mayport (Final). prepared for Southern Division Naval Facilities Engineering Command (SOUTHNAVFACENGCOM), North Charleston, South Carolina. (March).

ABB-ES. 1998b. CAR Addendum BEQ Building 1587, NAVSTA Mayport (Final). prepared for SOUTHNAVFACENGCOM, North Charleston, South Carolina. (July).

ABB-ES. 1998c. CAR Addendum BEQ Building 1587, NAVSTA Mayport (Final). prepared for SOUTHNAVFACENGCOM, North Charleston, South Carolina. (February).

APPENDIX B

REMEDIAL ALTERNATIVES CONSIDERED

APPENDIX B

The rationale leading to the development of remedial alternatives are presented in this appendix. The development of remedial alternatives consists of identifying and screening applicable technologies for groundwater (Section B.1) and soil (Section B.2).

B.1 TECHNOLOGY IDENTIFICATION FOR GROUNDWATER

The remedial actions developed for both Building 460 and Building 1587 will include a component to address the petroleum-contaminated soil. Remediation of the contaminated soil will abate the source of contamination in the underlying groundwater. Therefore, monitoring only for natural attenuation is an appropriate alternative to address the existing groundwater contamination at both Building 460 and Building 1587 Chapter (62-770.690, FAC). Because more intensive remedial actions to address groundwater are not necessary, no other treatment technologies will be screened.

The concentration of petroleum related organic compounds detected in groundwater decreased between the previous sampling events (May 1995 to March 1996) and the supplemental assessment (January 1998) at each site. Concentrations of the COCs in groundwater at each site only slightly exceed their respective GCTLs (refer to Tables B.1 and B.2). Therefore, it is anticipated that once the contaminated soil at each site is remediated, concentrations of MTBE in the groundwater at Building 460 and benzene at Building 1587 will continue to decrease and come into compliance with FDEP GCTLs within a five year period as stipulated in Chapter 62-770.690(1)(e) FAC.

B.2 TECHNOLOGY SCREENING FOR SOIL

Remediation of contaminated soil may be accomplished by either *ex-situ* or *in-situ* treatment alternatives; both approaches are described below.

B.2.1 Ex-situ Treatment Ex-situ alternatives involve soil excavation followed by a selected disposal or treatment alternative. Following excavation, soil may be either disposed (i.e., offsite landfilling) or treated. Three ex-situ soil treatment alternatives applicable to petroleum-contaminated soil are: onsite incineration, thermal desorption, and offsite incineration. The ex-situ soil treatment alternatives are described briefly below.

> Disposal via off-site landfill Contaminated material not regulated by RCRA land disposal restrictions is excavated and transported to an off-site, permitted landfill.
>
> Treatment via off-site incineration Contaminated material is excavated and transported to a licensed incinerator that thermally combusts organics in a direct-fired treatment unit. Gaseous and particulate emissions may require collection and treatment.
>
> Treatment via thermal desorption Contaminated material is excavated and treated by a mobile unit that volatilizes organic contaminants from soil or sediment and destroys them in a secondary combustion chamber.
>
> Treatment via on-site incineration Contaminated material is excavated and treated by a mobile incinerator that thermally combusts organics in a direct-fired treatment unit. Gaseous and particulate emissions may require collection and treatment.

Ex-situ treatment technologies are best applicable in situations where the site is free of any existing structures, facilities, underground utilities, and the volume to be treated is relatively low. The soil contamination at Building 460 lies beneath asphalt, concrete, and potentially building foundations. In addition, as stated in the letter of response to FDEP comments of the CAR Addendum for Building 460 (HLA, 1998a) these structures function as engineering controls, minimizing rainfall infiltration and thereby limiting leaching of contaminants in

subsurface soil to groundwater. Removal or damage of the asphalt and concrete could result in mobilization of the contaminants from the soil to groundwater. Therefore, the feasibility of *ex-situ* soil treatment at Building 460 is deemed impractical.

The contaminated soil at Building 1587 which would require excavation has an approximate volume of 29 cubic yards, and is overlain by grass. Therefore, *ex-situ* soil treatment is a viable option for Building 1587, and the ex-situ soil technology screening in Table B-1 is applicable to Building 1587 only.

As indicated in Table B-1, off-site landfilling is retained for further evaluation for Building 1587, and the remaining treatment technologies are eliminated from further since landfilling is the most cost effective alternative for the small volume of soil to be excavated at Building 1587.

B.2.2 <u>In-Situ Treatment</u> Four *in-situ* treatment technologies that may be suitable to this site are soil vapor extraction (SVE), bioventing, phytoremediation, and soil flushing. These technologies are described briefly in paragraphs B.2.2.1 through B.2.2.4, respectively. The in-situ soil treatment technologies are screened in Table B-2, according to advantages and disadvantages relative to other potential technologies. Based on the results of this screening, a recommendation is made to either eliminate or retain a technology for the development of a remedial alternative. A no action alternative is not included in the technology screening, because both sites are contaminated with petroleum-related compounds that exceeds their respective SCTLs and leachability criteria (Chapter 62-770.680, FAC).

Table B-1
Screening of Ex-Situ Soil Remediation Technologies

Remedial Action Plan, Buildings 460 and 1587
U.S. Naval Station Mayport
Mayport, Florida

Collection				
Technology/ Process	Advantages	Disadvantages	Screening Status	Comments
Offsite landfill	• Widely used and easily implemented technology. • No wastes or treatment residuals remaining onsite. • Contaminants may be relocated to a more stable, contained, lower exposure potential environment. • Relatively little mobilization effort and cost. • Experienced excavation contractors available.	• Subsurface utilities make excavation difficult. • Would not reduce toxicity or volume of contaminants. • Limited landfill capacity nationwide. • Transportation and landfilling costs may be expensive for large volumes. • Long-term liability associated with landfilled waste.	Retained.	Cost effective alternative for small excavation volume at Building 1587.
Offsite incineration	• Destruction and removal efficiencies are greater than 99.99 percent, thus reducing volume of contaminants. • Technology is reliable and has been widely used for treatment of organic waste. • Experienced vendors are available.	• Subsurface utilities make excavation difficult.	Eliminated.	Less cost effective than landfilling for very small soil volumes.
Thermal soil desorption	• Technology has been demonstrated full scale for treating organics. • May not require an incinerator permit to operate. • Mobile units are available.	• Subsurface utilities make excavation difficult. • Would not reduce toxicity, mobility, and volume of contaminants. • Secondary waste stream requires further treatment.	Eliminated	Does not offer benefits over other screened technologies.
Onsite incineration	• Destruction and removal efficiencies are greater than 99.99 percent, thus reducing volume of contaminants. • Technology is reliable and has been widely used for treatment of organic waste. • Onsite treatment eliminates need for transporting waste offsite. • Mobile units are available.	• Subsurface utilities make excavation difficult.	Eliminated.	Less cost effective than landfilling for very small soil volumes.

B.2.2.1 Soil Vapor Extraction

SVE systems may be used to remediate soil in the vadose zone or dewatered saturated zones. This technology generally consists of "vacuuming" gases from unsaturated soil through SVE wells with vacuum pumps. Negative pressure induced by the vacuum draws gases through the soil pore spaces. Air inlet wells combined with a surface cover may be used to facilitate the flow of atmospheric air into the soil to replace the extracted gases. Soil permeability and contaminant volatility are critical factors in the success of these systems. The extracted gases can be treated as necessary before discharge to the atmosphere.

B.2.2.2 Bioventing

Bioventing is the introduction of oxygen to vadose zone soils to stimulate biodegradation of organic contaminants. Air flow in the unsaturated soils may by induced by either air injection or vacuum extraction. Bioventing uses lower air flow rates than soil vapor extraction, providing only enough oxygen to enhance the activity of indigenous microorganisms. Soil moisture content and the presence of nutrients necessary for aerobic biodegradation are critical to bioventing. However, modules for adding both soil moisture and nutrients, such as nitrogen and phosphorous, may be incorporated into a bioventing system if needed. Depending on the design of a bioventing system, treatment of off-gas may be required. Bioventing is a proven technology for treatment of petroleum contaminated soil, and may be coupled with other in situ soil treatment technologies such as soil vapor extraction.

B.2.2.3 Phytoremediation

Phytoremediation is the use of naturally-occurring and genetically-engineered vegetation to clean up or contain contaminated environmental media. It is considered an innovative technology at this time because, although the technology has shown to be very effective in specific situations, the processes are not well understood and they have been applied (in full-scale) to a relatively small, but growing, number of contaminated sites.

The are several mechanisms involving plants that accomplish removal, degradation, or stabilization of contaminated soil. *Phytoextraction* involves the direct uptake and translocation of contaminants into plant tissues. *Phytodegradation* or phytotransformation involves the breakdown or transformation of contaminants by enzymes in plants (or exudates) into other harmless chemicals. *Phytostabilization* involves the use of plants to reduce the migration potential of contaminated soil. By planting, soil erosion via wind or water, is reduced. *Phytostimulation* or assisted bioremediation involves selective stimulation of microbial action in the root zone of the soil strata to enhance biodegradation.

The applicability of phytoremediation at Building 460 is low due to the environment at the site. The contaminated soil at Building 460 is overlain by asphalt, concrete, and buildings. Therefore, phytoremediation is not a viable technology at Building 460.

B.2.2.4 Soil Flushing

In-situ soil flushing is an innovative technology that involves the injection of a flushing solution into vadose zone soils to increase the solubility of contaminants. The injected solution may consist of either water only or water mixed with additives appropriate for treatment of site-specific contaminants (e.g., acids, bases, or surfactants). The flushing action mobilizes contaminants to the groundwater, and the elutriate is removed from the underlying aquifer via downgradient extraction wells. The recovered elutriate may require above-ground treatment in order to meet the discharge requirements of the receiving treatment plant or water body. Recovered injection solution may be separated from the desorbed contaminants and reused in the flushing process. Air emissions generated from treatment of the extracted elutriate may also require collection and treatment.

A thorough comprehension of site geology is critical for in situ soil flushing, as low-permeability vadose zone soils may be difficult to flush, and a poorly defined capture zone may allow washing of contaminants away from the site.

Table B-2

Screening of In-Situ Soil Remedial Technologies

Remedial Action Plan, Buildings 460 and 1587
Naval Station Mayport
Mayport, Florida

Remedial Technology	Advantages	Disadvantages	Screening Status	Comments
Soil vapor extraction	• Reduces mobility, toxicity, and volume of contaminants if vapors are collected and treated. • Effective for extraction of VOCs from unsaturated zone. • Demonstrated capability for extracting up to 2,000 pounds of VOCs per day. • Not subject to RCRA land disposal restrictions. • Extraction equipment is off-the-shelf and experienced vendors are readily available. • Pavement "cap" over contamination at Building 460 would increase radius of influence of extraction wells.	• Dispersion of vapors could result in localized concentrations of contaminants near well heads. • Extensive soil and air monitoring required, including soil borings. • Not effective for treating soil with a high moisture content. • Off-gas may require treatment, resulting in secondary waste. • Shallow vadose zone at sites could allow groundwater to be drawn into extraction wells.	Retained.	Proven treatment for petroleum hydrocarbons. Pavement overlying contamination at Building 460 acts as an engineering control to limit surface water infiltration, contain volatilized contaminants, and prevent short-circuiting of SVE system.
Soil flushing	• May be tailored for treatment of specific contaminants by using additives in flushing solution. • Unlikely to disrupt existing utilities or structures.	• Most effective for permeable, homogeneous soils. • Introduces contamination, and potentially flushing additives, to underlying aquifer. • Requires treatability study. • Groundwater flow must be well defined. At Mayport, groundwater flow is tidally influenced. • Recovered fluids may require treatment above ground, which may produce residual sludge.	Eliminated.	Even distribution of flushing solution is difficult, and more costly than alternate technologies.

Table B-2

Screening of In-Situ Soil Remedial Technologies

Remedial Action Plan, Buildings 460 and 1587
Naval Station Mayport
Mayport, Florida

Remedial Technology	Advantages	Disadvantages	Screening Status	Comments
Bioventing	• Reduces toxicity and volume of petroleum-related organics. • Generates little or no secondary waste. • Decreasing soil OVA concentrations at both sites indicate that indigenous hydrocarbon degrading bacteria may be present.	• Injected air may mobilize VOCs in the vadose zone, causing contamination to spread. • Strict operating controls are required to maintain optimal biodegradation environment. • Volatile gases may seep into nearby buildings within the radius of influence of injection wells. • Effectiveness may be limited for sites with very shallow or fluctuating water table elevations.	Eliminated.	Injection of air into vadose zone near buildings may cause volatilized contaminants to seep into nearby buildings at Building 460.
Phytoremediation	• Effective for petroleum-related contaminants. • Generated less secondary waste than other treatment methods.	• Cannot be implemented in paved areas. • Long treatment time may be required (usually more than one growing season). • Less cost effective for small areas of contamination. • May effect food chain by consumption of plant material by insects or mammals.	Eliminated.	Not feasible for Building 460, where contamination is beneath pavement and buildings. Not cost effective for small areas of contamination, such as Building 1587.

Notes: RCRA = Resource Conservation and Recovery Act.
VOCs = volatile organic compounds.

APPENDIX C

ENGINEERING CALCULATIONS

C-1 Soil Vapor Extraction System
C-2 Contaminant Mass
C-3 Soil Excavation Volume - Building 1587

SOIL VAPOR EXTRACTION SYSTEM

Flow Rate

PROJECT	COMP. BY	JOB NO.
RAP - Building 460 - SVE Air Flow to Trench Calculations	ECA	02536-16
	CHK. BY RCL	DATE 1-28-99

Governing equation derived by WAM, ABB-ES on 1/29/92 for project no. 6321-04 (see Attached pgs 8-11).

$$\boxed{Q = \left(\frac{k H W}{\mu L}\right)\left(\frac{P_{in}^2 - P_{out}^2}{2 P_{out}}\right)}$$

H = Flow thickness = 5 ft = approx depth to wtr tbl.

W = Flow width = (length of trench)

L = Flow Length (assume radius of influence)

P_{in} = Absolute pressure at inlet

P_{out} = Absolute pressure at outlet (suction side of blower)

Q = volumetric air flow at outlet

μ = viscosity of air = μ_{air} at 60°F = 3.74×10^{-7} lb·sec/ft² (see pg. 7 attached)

k = intrinsic permeability = 3.19×10^{-7} cm² (see pg. 3)

$= 3.19 \times 10^{-7} cm^2 \times \frac{in^2}{(2.54 cm)^2} \times \frac{ft^2}{(12 in)^2} = 3.43 \times 10^{-10} ft^2$

L = flow length = radius of influence at P_i

Without a pilot test, data from Bldg 780 NAS Jax pilot test will be used, as site conditions are assumed to be similar: ∴ $L = 35$ ft.

$P_{in} = P_{atm} = 14.7$ psia

Assume W = unit = 1 ft, so that flow per unit length of trench (W) may be calculated

P_{out} = assume 40 in H_2O, also based on pilot test results from Bldg 780 and Area A at JAX (similar site conditions) (see p. 4 attached)

<u>Absolute Pressure conversion for P_{in} and P_{out}</u>

$P_{abs} = P_{atm} + P_{gauge}$ (P_{gauge} is negative if vacuum)

$$\underline{\underline{P_{out}}} = 14.7 \frac{lb}{in^2} \times \frac{(12 in)^2}{(1 ft)^2} - \left(40 \text{ in } H_2O \times \frac{1 ft}{12 in}\right)\left(62.4 \frac{lb}{ft^3}\right) =$$

$$2116.8 \text{ psf} - 208 \text{ psf} = 1908.8 \frac{lb}{ft^2} \times \frac{(ft)^2}{(12 in)^2} = 13.3 \text{ psia}$$

$$\underline{\underline{P_{in}}} = 13.3 \text{ psia}$$

PROJECT	COMP. BY	JOB NO.
RAP - Building 460 - SVE Air Flow to Trench Calculations	ECA	02536.16
	CHK. BY	DATE
	RCL	1-28-99

$$Q_o = \frac{k_i \, HW}{\mu L} \frac{(P_{in}^2 - P_{out}^2)}{2 P_{out}}$$

$$= \left[\frac{(3.43\times10^{-10}\,ft^2)(5\,ft)(1\,ft)}{(3.74\times10^{-7}\,\frac{lb\cdot sec}{ft^2})(35\,ft)}\right]\left[\frac{(14.7\,\frac{lb}{in^2})^2-(13.3\,\frac{lb}{in^2})^2}{2(13.3\,\frac{lb}{in^2})}\right]\times\frac{(12\,in)^2}{ft^2}$$

$$= \left[1.31\times10^{-4}\,\frac{ft^5}{lb\cdot sec}\right]\left[212.2\,\frac{lb}{ft^2}\right]$$

$$= 0.02780\,\frac{ft^3}{sec}\times\frac{60\,sec}{min}$$

$$= 1.668\,\frac{ft^3}{min}$$ (per lin. ft of trench)

Trench at Bldg 460 shall be approx. 80 feet long to span entire axis of plume, therefore total flow = 133.4 ≅ 133 cfm @ 40 in. H_2O

Assume Factor of safety 1.5

∴ $\boxed{\text{Total Design flow in trench} \cong 200\text{ cfm}}$

PROJECT	COMP. BY	JOB NO.
RAP- Bldg 460 SVE Flow Rate	ECA	2536.16
	CHK. BY RCL	DATE 1-27-99

Avg. hydraulic conductivity, K
(as reported in CAR) = 5.90 ft/day

$$5.9 \frac{ft}{day} \times \frac{12 in}{ft} \times \frac{2.54 cm}{in} \times \frac{day}{24 hr} \times \frac{hr}{60 min} \times \frac{min}{60 sec} = 2.08 \times 10^{-3} cm/s$$ ✓

Intrinsic permeability, K_i

$$K = K_i \frac{\gamma}{\mu} \quad \therefore \quad K_i = \frac{K\mu}{\gamma}$$ (see pg. 5 attached) ✓

μ = dynamic viscosity

μ_{air} at 20°C = $1.81 \times 10^{-5} \frac{N \cdot s}{m^2}$ (see pg. 7 attached) ✓

γ = specific weight

γ_{air} at 20°C = $11.8 \ N/m^3$ (see pg. 7 attached) ✓

$$K_i = \frac{K\mu}{\gamma} = \frac{2.08 \times 10^{-3} cm/s \left(1.81 \times 10^{-5} \frac{N \cdot s}{m^2}\right)}{11.8 \ N/m^3} \times \left(\frac{1m}{100cm}\right) = 3.19 \times 10^{-11} m^2$$ ✓

$$3.19 \times 10^{-11} m^2 \times \frac{(100cm)^2}{1m^2} = 3.19 \times 10^{-7} cm^2$$ ✓

$$1 \text{ darcy} = 9.87 \times 10^{-9} cm^2$$ ✓

$$K_i = 3.19 \times 10^{-7} cm^2 \times \frac{darcy}{9.87 \times 10^{-9} cm^2} = 32.3 \text{ darcy}$$ ✓

For fine-grained sands, the measured K value, and calculated K_i value are between typical range for fine sands and and well-sorted sand, according to Table 4.6 on p.6, attached.

PROJECT	COMP. BY	JOB NO.
RAP - Building 460 SVE Flow Rate	ECA	
	CHK. BY RCL	DATE 1-27-99

Pilot tests were not conducted at B460, to determine expected vacuum flow rate, pressure, or area of influence.

Following is data from vapor extraction pilot tests conducted at 3 sites at NAS Jacksonville:

Site Name	Vacuum Pressure (in. H_2O)	Induced Flow (cfm)	Radius of Influence (ft)	Vadose Zone Soils
Bldg 106 - OU3	43	10	35	native silty and clayey sand
Bldg 780 - OU3	12	28	35	sandy fill
Area A - OU3	35	12	30	silty fine sand, trace med. + coarse sand

Note: [1] All 3 sites above are covered with concrete/asphalt, as is Bldg. 460 at NAVSTA Mayport

[2] A vapor extraction trench was installed at Bldg 106, and is currently operating. Design flow is 300 scfm, 52-in. water

Site conditions are anticipated to be similar to those at Bldg 106 and Area A, NAS Jacksonville.

∴ assume 40 in wtr. pressure for SVE at Bldg 460, Mayport ✓

Fetter, C. W., 1994, Applied Hydrogeology, 3rd Ed. New York: MacMillan College Publishing Company.

5/11

These proportionality relationships can be expressed as

$$Q \propto d^2$$
$$Q \propto \gamma$$
$$Q \propto \frac{1}{\mu}$$

Darcy's law can also be expressed as

$$Q = -\frac{Cd^2\gamma}{\mu}\frac{dh}{dl} \tag{4-15}$$

The new proportionality constant, C, is called the *shape factor*. Both C and d^2 are properties of the porous media, whereas γ and μ are properties of the fluid. We can introduce a new constant, K_i, which is representative of the properties of the porous medium alone. It is termed the **intrinsic permeability.** This is basically a function of the size of the openings through which the fluid moves. The larger the square of the mean pore diameter, d, the lower the flow resistance. The cross-sectional area of a pore is also a function of the shape of the opening. A constant can be used to describe the overall effect of the shape of the pore spaces. Using this dimensionless constant, C, the intrinsic permeability is given by the expression

$$K_i = Cd^2 \tag{4-16}$$

The dimensions of K_i are (L^2), or area. The relationship between hydraulic conductivity and intrinsic permeability is

$$K = K_i\left(\frac{\gamma}{\mu}\right) \tag{4-17}$$

or

$$K = K_i\left(\frac{\rho g}{\mu}\right) \tag{4-18}$$

where g is the acceleration of gravity and ρ is the density.

Units for K_i can be in square feet, square meters, or square centimeters. In the petroleum industry, the *darcy* is used as a unit of intrinsic permeability. (The petroleum engineer is similarly concerned with the occurrence and movement of fluids through porous media.) The darcy is defined as

$$1 \text{ darcy} = \frac{\dfrac{1 \text{ cP} \times 1 \text{ cm}^3/\text{s}}{1 \text{ cm}^2}}{1 \text{ atm}/1 \text{ cm}}$$

6/11

TABLE 4.6 Ranges of intrinsic permeabilities and hydraulic conductivities for unconsolidated sediments

Material	Intrinsic Permeability (darcys)	Hydraulic Conductivity (cm/s)
Clay	10^{-6}–10^{-3}	10^{-9}–10^{-6}
Silt, sandy silts, clayey sands, till	10^{-3}–10^{-1}	10^{-6}–10^{-4}
Silty sands, fine sands	10^{-2}–1	10^{-5}–10^{-3}
Well-sorted sands, glacial outwash	1–10^{2}	10^{-3}–10^{-1}
Well-sorted gravel	10–10^{3}	10^{-2}–1

4.4.3 Permeability of Sediments

Unconsolidated coarse-grained sediments represent some of the most prolific producers of ground water. Likewise, clays are often used for engineering purposes, such as lining solid-waste disposal sites, because of their extremely low intrinsic permeability. There is obviously a wide-ranging continuum of permeability values for unconsolidated sediments (Table 4.6).

The intrinsic permeability is a function of the size of the pore opening. The smaller the size of the sediment grains, the larger the surface area the water contacts (Figure 4.13). This increases the frictional resistance to flow, which reduces the intrinsic permeability. For well-sorted sediments, the intrinsic permeability is proportional to the grain size of the sediment (Norris & Fidler 1965).

For sand-sized alluvial deposits, several factors relating intrinsic permeability to grain size have been noted (Masch & Denny 1966). These observations would hold true for all sedimentary deposits, regardless of origin of deposition.

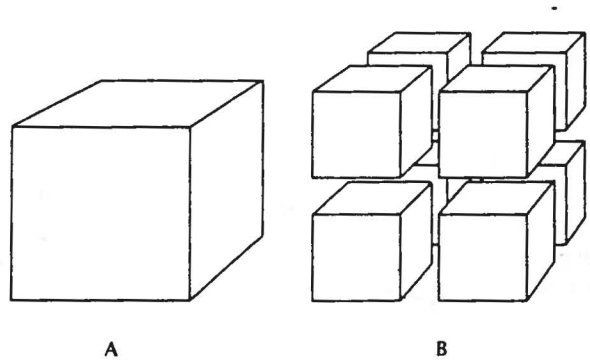

FIGURE 4.13 Relationship of sediment grain size to surface area of pore space. **A.** A cube of sediment with a surface area of 6 square units. **B.** The cube has been broken into 8 pieces, each with a diameter of one-half of the cube in part A. The surface area has increased to 12 square units—an increase of 100%.

Roberson, John A., and Clayton T. Crowe, 1993.
Engineering Fluid Mechanics, 5th ed.
Houghton Mifflin Company.

7/11

TABLE A.5 MECHANICAL PROPERTIES OF AIR AT STANDARD ATMOSPHERIC PRESSURE

Temperature	Density (ρ)	Specific weight (γ)	Dynamic viscosity	Kinematic viscosity
	kg/m³	N/m³	N • s/m²	m²/s
−20°C	1.40	13.7	1.61×10^{-5}	1.16×10^{-5}
−10°C	1.34	13.2	1.67×10^{-5}	1.24×10^{-5}
0°C	1.29	12.7	1.72×10^{-5}	1.33×10^{-5}
10°C	1.25	12.2	1.76×10^{-5}	1.41×10^{-5}
→ 20°C	1.20	11.8	1.81×10^{-5}	1.51×10^{-5}
30°C	1.17	11.4	1.86×10^{-5}	1.60×10^{-5}
40°C	1.13	11.1	1.91×10^{-5}	1.69×10^{-5}
50°C	1.09	10.7	1.95×10^{-5}	1.79×10^{-5}
60°C	1.06	10.4	2.00×10^{-5}	1.89×10^{-5}
70°C	1.03	10.1	2.04×10^{-5}	1.99×10^{-5}
80°C	1.00	9.81	2.09×10^{-5}	2.09×10^{-5}
90°C	0.97	9.54	2.13×10^{-5}	2.19×10^{-5}
100°C	0.95	9.28	2.17×10^{-5}	2.29×10^{-5}
120°C	0.90	8.82	2.26×10^{-5}	2.51×10^{-5}
140°C	0.85	8.38	2.34×10^{-5}	2.74×10^{-5}
160°C	0.81	7.99	2.42×10^{-5}	2.97×10^{-5}
180°C	0.78	7.65	2.50×10^{-5}	3.20×10^{-5}
200°C	0.75	7.32	2.57×10^{-5}	3.44×10^{-5}
	slugs/ft³	lbf/ft³	lbf-s/ft²	ft²/s
0°F	0.00269	0.0866	3.39×10^{-7}	1.26×10^{-4}
20°F	0.00257	0.0828	3.51×10^{-7}	1.37×10^{-4}
40°F	0.00247	0.0794	3.63×10^{-7}	1.47×10^{-4}
60°F	0.00237	0.0764	3.74×10^{-7}	1.58×10^{-4}
80°F	0.00228	0.0735	3.85×10^{-7}	1.69×10^{-4}
100°F	0.00220	0.0709	3.96×10^{-7}	1.80×10^{-4}
120°F	0.00213	0.0685	4.07×10^{-7}	1.91×10^{-4}
150°F	0.00202	0.0651	4.23×10^{-7}	2.09×10^{-4}
200°F	0.00187	0.0601	4.48×10^{-7}	2.40×10^{-4}
300°F	0.00162	0.0522	4.96×10^{-7}	3.05×10^{-4}
400°F	0.00143	0.0462	5.40×10^{-7}	3.77×10^{-4}

Derivation

Air Flow Through Porous Media

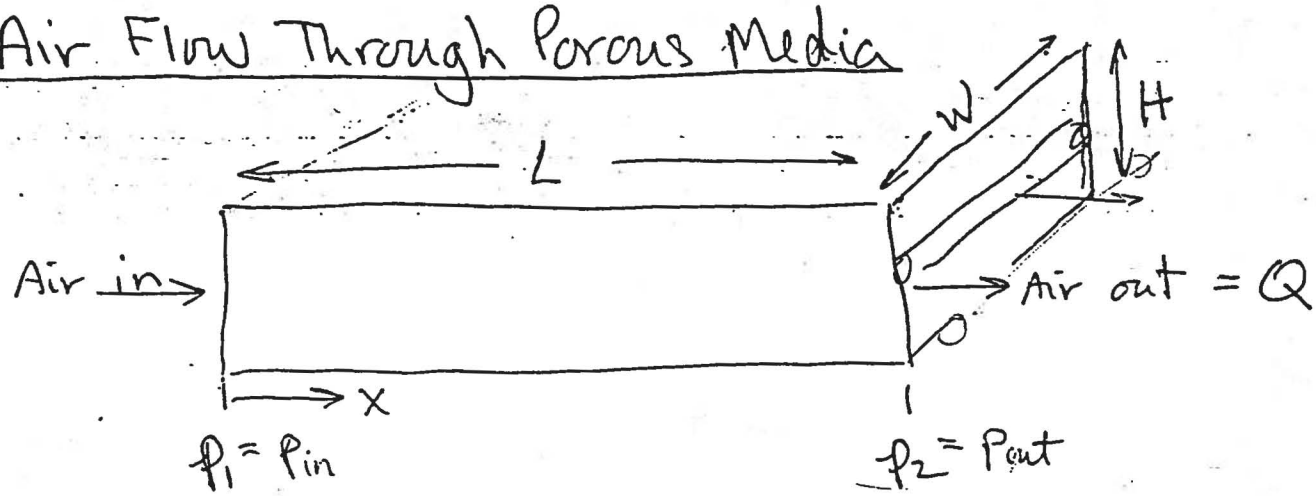

Note: must consider density, ρ, variable

1. Conservation of mass (1-D flow)

$$\frac{d}{dx}(\rho q) = 0$$

ρ — air mass density
q — Darcy velocity

$$q = -\frac{k}{\mu}\frac{dp}{dx}$$

k = intrinsic permeability – ft^2

$K = \frac{k\rho g}{\mu}$ {K in fps}

μ = dynamic viscosity – $\frac{lb\text{-}sec}{ft^2}$

p = absolute pressure $= \rho RT$

$$\frac{d}{dx}\left(\rho\left\{-\frac{k}{\mu}\frac{dp}{dx}\right\}\right) = 0$$ — with k & μ constant

$$\frac{d}{dx}\left(\rho\frac{dp}{dx}\right) = 0$$ with $\rho = p/RT$

$$\frac{d}{dx}\left(\frac{p}{RT}\frac{dp}{dx}\right) = 0 \qquad R \text{ \& } T \text{ constant}$$

$$\boxed{\frac{d}{dx}\left(p\frac{dp}{dx}\right) = 0}$$

Integrate once

$$p\frac{dp}{dx} = A$$

Now at the outlet we are pumping with a vacuum pump, Q @ $p_{out} = Q_o$

$$Q_o = qA = qHW = -\frac{kHW}{\mu}\left.\frac{dp}{dx}\right|_{x=L}$$

So at $x=L$

$$\left.\frac{dp}{dx}\right|_{x=L} = \frac{-Q_o\mu}{kHW}$$

Then for A we have

$$A = p_{out}\left.\frac{dp}{dx}\right|_{x=L} = \frac{-p_{out}Q_o\mu}{kHW}$$

Then we have

$$p\frac{dp}{dx} = \frac{-p_{out}Q_o\mu}{kHW}$$

Now $$p\frac{dp}{dx} = \frac{1}{2}\frac{dp^2}{dx} = \frac{-p_{out}Q_0\mu}{kHW}$$

Integrating again

$$p^2 = \frac{-2p_{out}Q_0\mu}{kHW}x + B$$

Now at $x = 0$, $p = p_{in}$
so then

$$B = p_{in}^2$$

Finally we have

$$\boxed{p^2 = p_{in}^2 - \frac{2p_{out}Q_0\mu}{kHW}x}$$

For a finite column or soil block of length L (theoretically only for horizontal flow; but if distance vertically is not extreme, i.e less than a few feet, also good for vertical flow):

$$p_{out}^2 = p_{in}^2 - \frac{2p_{out}Q_0\mu}{kHW}L$$

1/29/92 Allied Signal 6321-04

Or solving for Q gives

$$\frac{p_{in}^2 - p_{out}^2}{2 p_{out}} = \frac{Q_o \mu L}{k H W}$$

or

$$\boxed{Q_o = \frac{k H W}{\mu L} \frac{(p_{in}^2 - p_{out}^2)}{2 p_{out}}}$$

Note: the pressures are <u>absolute values</u>

Alan –

This equation should be used for both our lab tests and the field prediction

Also for pilot study predictions we should use the equation for radial flow given in the paper in <u>Ground Water</u> journal

Willard

Estimated Cleanup Time

Maximum Removal Rate Estimates

select your unit preference below

◉ [lb/d]

○ [kg/d]

Note:

These are "maximum removal rates", and should only be used as screening estimates to determine if venting is even feasible at a given site. Continue on to the next card to assess if these rates are acceptable...

Temperature (C)	25
Soil Type	User Defined
Soil Permeability Range (darcy)	30 to 35
Well Radius (in)	6
Radius of Influence (ft)	35
Contaminant Type	Weathered Gasoline
Permeable Zone Thickness (ft)	5

P_w - Well Vacuum (in H_2O)	Flowrate Estimates [SCFM] (single well)			Max. Removal Rate Estimates [lb/d] (single well)		
5	9.72	to	11.34	243.62	to	284.22
10	19.33	to	22.55	490.58	to	572.30
20	38.17	to	44.53	993.77	to	1159.35
40	74.42	to	86.82	2043.20	to	2383.64
60	108.74	to	126.86	3157.62	to	3683.80
120	200.16	to	233.52	7028.27	to	8199.65
200	295.13	to	344.31	14371.86	to	16766.76

12 Print Card

Anticipated Cleanup Time 1/1

RCL

using HyperVentilate software v2.0 for Windows, Johnson, Paul, PhD, Shell Development, Houston, TX.

For 40-in. H_2O vacuum, max. contaminant removal rate = 2043.2 to 2383.6 lb/day for 1 vertical well.

Assume for 80 ft horizontal trench length.

$$\frac{80\,ft}{35'\ ROI} = 2.29$$

∴ Max. contaminant removal rate = 2.29 (2043 → 2384 lb/day)

= 4678 to 5459 lb/day

However, modeling above is for weathered gasoline. COCs at Building 460 are from #2 Fuel oil, for which mass removal rate would be expected to be lower. Assume mass removal rate is approx. 10% of that for weathered gasoline, to be conservative.

∴ Mass removal rate = 0.10 (4678 lb/day)

= 46.8 lb/day

Mass of contamination at Building 460 is approx. 6162 lb. (see Appendix C-2)

$$\frac{6162\ lb}{46.8\ lb/day} = 132\ day \cong 19\ weeks \cong \boxed{5\ months}$$ ✓

System Friction Losses

SVE System Piping Design
Building 460

NAVSTA Mayport
2536.16

Calc. by: ECA
Chk. by: RCL

Assumptions:
Soil Gas Temperature: 80 °F
Kinematic Viscosity: 0.01014 ft^2/min
Density: 0.077 lb/ft^3

Component #	Type	Material	Roughness Coefficient	Flow Rate (cfm)	Comp. ID (inches)	Cross-Sectional Velocity (ft/min)	Velocity Press. (in. of H2O)	Pipe Length (feet)	Fitting Loss Coefficient Co	Reynold's Number (dim)	Friction Factor* (dim)	Piping Pressure Losses (in. of H2O)	Fitting Pressure Losses in. of H2O	Component Pressure Losses (in. of H2O)	Combined Pressure Losses (in. of H2O)
	Pressure Losses on Inlet Side of Blower														
	Vacuum pressure in soil: 40 in. H_2O														
1	slotted pipe	pvc	0.002	200.00	6.000	1018.59	0.06468	80.00		50226.41	0.02114	0.21874			0.22
2	90 angle			200.00	6.000	1018.59	0.06468		0.22	50226.41			0.01423		0.23
3	pipe	pvc	0.000005	200.00	6.000	1018.59	0.06468	15.00		50226.41	0.02114	0.04101			0.27
4	90 angle			200.00	6.000	1018.59	0.06468		0.22	50226.41			0.01423		0.29
5	pipe	pvc	0.000005	200.00	6.000	1018.59	0.06468	5.00		50226.41	0.02114	0.01367			0.30
6	reducer, 6x3			200.00	6.000	1018.59	0.06468		0.12	50226.41			0.00776		0.31
7	pipe	pvc	0.000005	100.00	3.000	2037.18	0.25873	1.00		50226.41	0.02114	0.02187			0.33
8	tee, straight			100.00	3.000	2037.18	0.25873		0.40	50226.41			0.10349		0.44
	flow indicator														
9	pipe	pvc	0.000005	100.00	3.000	2037.18	0.25873	1.00		50226.41	0.02114	0.02187			0.46
10	tee, straight			100.00	3.000	2037.18	0.25873		0.40	50226.41			0.10349		0.56
11	ball valve, normally open			100.00	3.000	2037.18	0.25873		0.20	50226.41			0.05175		0.61
	vacuum indicator														0.61
12	pipe	pvc	0.000005	100.00	3.000	2037.18	0.25873	1.00		50226.41	0.02114	0.02187			0.63
	ball valve, normally closed														
	sample port														
13	pipe	pvc	0.000005	100.00	3.000	2037.18	0.25873	3.00		50226.41	0.02114	0.06562			0.70
14	tee, straight			100.00	3.000	2037.18	0.25873		0.40	50226.41			0.10349		0.80
15	butterfly valve, normally closed														
16	filter, dilution air														
17	pipe	pvc	0.000005	100.00	3.000	2037.18	0.25873	1.00		50226.41	0.02114	0.02187			0.82
18	90 angle			100.00	3.000	2037.18	0.25873		0.22	50226.41			0.05692		0.88
19	pipe	pvc	0.000005	100.00	3.000	2037.18	0.25873	3.00		50226.41	0.02114	0.06562			0.95
20	moisture separator			100.00										3.00000	3.95
21	pipe	pvc	0.000005	167.00	4.000	1913.68	0.22831	2.00		62908.58	0.01998	0.02737			3.97
22	tee, straight			167.00	4.000	1913.68	0.22831		0.40	62908.58			0.09133		4.07
23	ball valve, normally open			167.00	4.000	1913.68	0.22831		0.20	62908.58			0.04566		4.11
	vacuum indicator														
24	pipe	pvc	0.000005	167.00	4.000	1913.68	0.22831	2.00		62908.58	0.01998	0.02737			4.14
25	reducer, 4x2			167.00	4.000	1913.68	0.22831		0.12	62908.58			0.02740		4.17
26	filter			67.00										3.00000	7.17
27	expansion, 2x2.5			83.00	2.500	2434.84	0.36960		0.33	50025.51			0.12197		7.29
28	pipe	gal. steel	0.0005	83.00	2.500	2434.84	0.36960	2.00		50025.51	0.01372	0.04867			7.34
29	tee, straight			83.00	2.500	2434.84	0.36960		0.40	50025.51			0.14784		7.49
30	ball valve, normally open			83.00	2.500	2434.84	0.36960		0.20	50025.51			0.07392		7.56
	vacuum switch														
31	pipe	gal. steel	0.0005	83.00	2.500	2434.84	0.36960	1.00		50025.51	0.01372	0.02434			7.58
32	tee, straight			83.00	2.500	2434.84	0.36960		0.40	50025.51			0.14784		7.73
33	ball valve, normally open			83.00	2.500	2434.84	0.36960		0.20	50025.51			0.07392		7.81
	vacuum indicator														
34	pipe	gal. steel	0.0005	83.00	2.500	2434.84	0.36960	2.00		50025.51	0.01372	0.04867			7.85
35	tee, side-outlet flow			83.00	2.500	2434.84	0.36960		1.80	50025.51			0.66529		8.52
	vacuum relief valve														
36	pipe	gal. steel	0.0005	83.00	2.500	2434.84	0.36960	1.00		50025.51	0.01372	0.02434			8.54
37	blower			83.00											
								Design Blower Pressure = Vacuum Pressure in soil + System Friction Losses							48.54

PROJECT	COMP. BY	JOB NO.
System Pressure Losses NAVSTA Mayport - SVE system	ECA	02536.16
	CHK. BY RCL	DATE 2-4-99

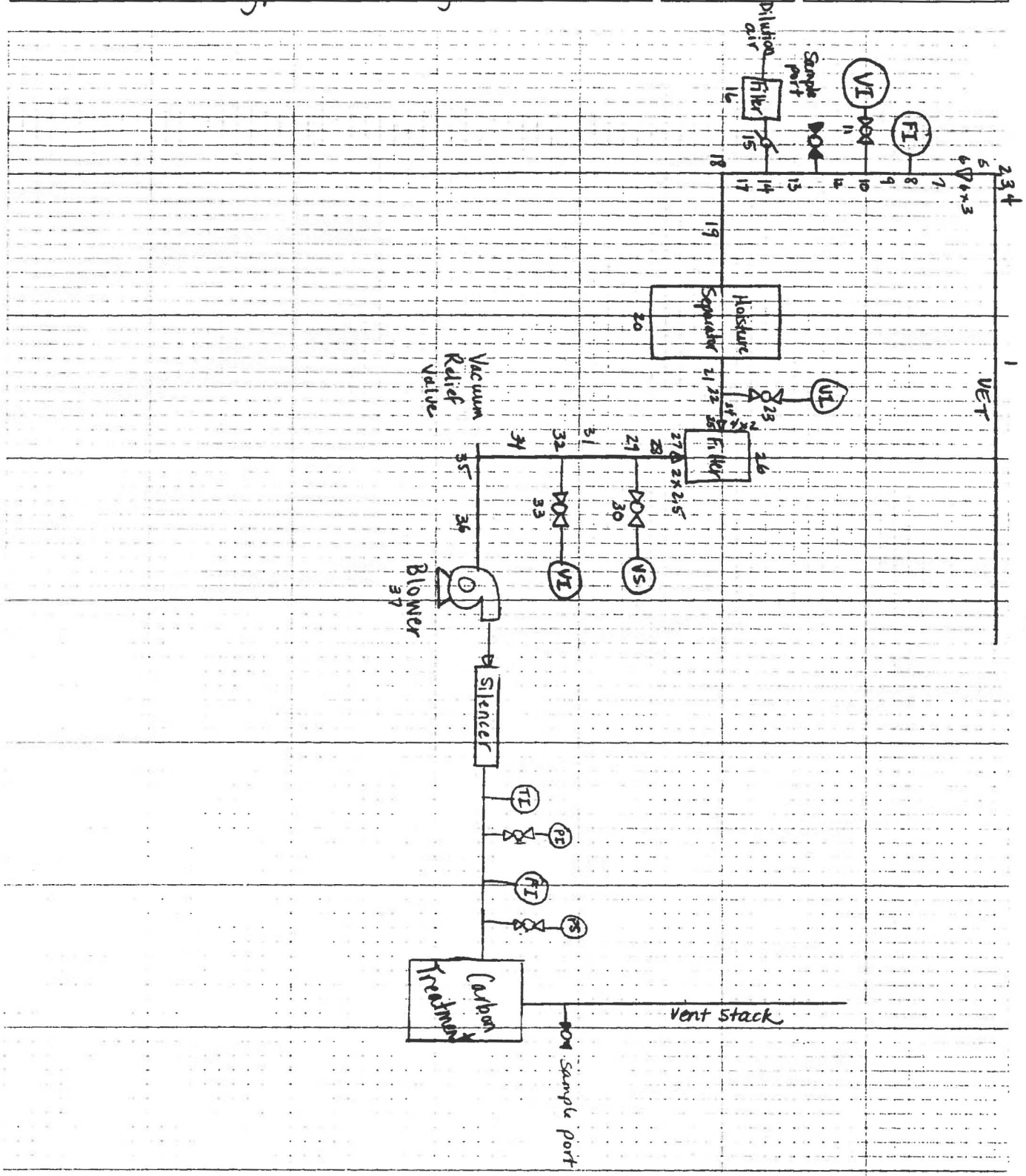

Vendor Information

CARBONAIR®
ENVIRONMENTAL SYSTEMS

CARBONAIR ENVIRONMENTAL SYSTEMS, INC.
2731 NEVADA AVENUE NORTH
NEW HOPE, MINNESOTA
55427-2806
612•544•2154 800•526•4999
FAX 612•544•2151

FAX

Date: February 4, 1999

To: HLA
Attn: Arin Allen
Tel: 850-656-1293
Fax: 850-877-0742

Re: SVE/ enclosure bid

Proposal: 209736

Dear Arin:
Here is a quote on the items we spoke about. I will follow up with carbon modeling and carbon pricing. Below is a detailed description and pricing, we appreciate the opportunity to bid.

Description/Pricing

(1) Carbonair model CE 808/3 soil vapor extraction systems — $ 3,990.00
- Blower, Rotron model EN808, regenerative blower
- 200scfm at 58" wc vacuum
- 7.5 HP, 230/460 VAC, 3Ø, EXP motor
- Moisture separator
  - 40 gallon holding capacity
  - steel drum construction
  - High level switch, XP
- Inline filter with 10 micron replaceable element
- Vacuum relief valve
- Bleed valve
- Vacuum gage on inlet to moisture separator
- Schedule 40 galvanized steel inlet and blower piping
- Above equipment mounted on a steel stand

(1) Control panel, for mounting and wiring by others in nonhazardous area — $ 1,950.00
- Blower H-O-A switch
- Blower IEC overload and contactor
- Control power transformer
- Door mounted fused disconnect
- Downstream equipment interlock
- NEMA 3R enclosure with lockable outer door
- Alarm reset button and indicator light for moisture separator high level

OPTIONS:

(1) Temperature gage, 0-250°F	$ 58.00
(1) Air flow meter, Rotron model FM30C	$ 308.00
(1) Vacuum gage, 0-30" Hg	$ 38.00
(1) Vacuum switch, Dwyer model 1950, NEMA 7/9	$ 95.00
(1) Temperature switch, Barksdale model L1X, NEMA 7/9	$ 595.00

CARBONAIR

(1) Hour meter, mounted in control panel $ 175.00

(1) Carbonair steel building, 4' wide x 6' long x 8' high (outside dimensions) $ 3,995.00
Steel building (non combustible design)
Industrial enamel coated 14 gage sheet steel exterior
Industrial enamel coated 3/16" sheet steel floor
4" structural channel floor supports every 24" on center
4" structural channel skid framing members
Single pitched roof
Anchor lugs and lifting eyes
(1) 36" x 6' 8", insulated steel door
Fork pockets on (2) sides of skid
(1) Ceiling mounted explosion proof light with wall switch, includes wiring
(1) 3ϕ Breaker panel wired to outside of building
Provides breakers for heat, light, vent & SVE panel
(1) XP ventilation fan with inlet and outlet louvers & thermostat
SVE system will be installed, piped and wired in building, control panel will be mounted and wired on SVE or outside of trailer. Piping will be schedule 80 PVC for SVE. Wiring will be per NEC for Class I, Div I Group D hazardous environment for any electrical components mounted inside the building.

General Conditions

1. This proposal is subject to attached terms and conditions.
2. Terms of payment are 30% upon order, 30% upon shipment, balance Net 30 days.
3. Proposal and pricing valid for 30 days from the date of this proposal.
4. This proposal and pricing are based on our interpretation of the sections of the RFQ or specification that have been made available to us. Exceptions have been noted where ever possible. In the event of a conflict between the language in the specification and the proposal, the language in the proposal takes precedence and is the basis of the proposed pricing. Carbonair reserves the right to reject any order based on differences in pricing. Carbonair reserves the right to reject any order based on differences in interpretation of the specification, or for any reason at time of order.
5. Carbonair will not initiate work without a fully executed contract or purchase order. Fabrication will not be initiated until complete submittal approvals have been received.
6. Submittals will be provided within one week of receipt of a fully executed contract or P.O.
7. Equipment can generally be shipped within 5-7 weeks after receipt of completely approved submittals. Lead time will be updated at the time of order execution.
8. Shipping charges are not included in the prices quoted unless explicitly stated in the proposal. Actual freight costs will be pre-paid and added to the invoice.
9. Sales tax is not included in the prices quoted. Where required sales tax will be added to invoice.

If you have any questions or comments concerning this information, please feel free to give me a call at 800-526-4999 or 800-526-4999. Thank you for the opportunity to bid on this project.

Sincerely,

Ed Butler
Regional Manager, Southeast

Garth Hoffert
Sales Development

CARBONA
Soil
Treatment

Skid-Mounted Soil Vapor Extraction Systems

Carbonair's skid-mounted SVE systems are sized to meet your requirements and are designed for high performance, portability and ease-of-use. Carbonair's unique stacked design saves space without sacrificing performance, and it can be easily moved with the optional wheel assembly or a two-wheel cart.

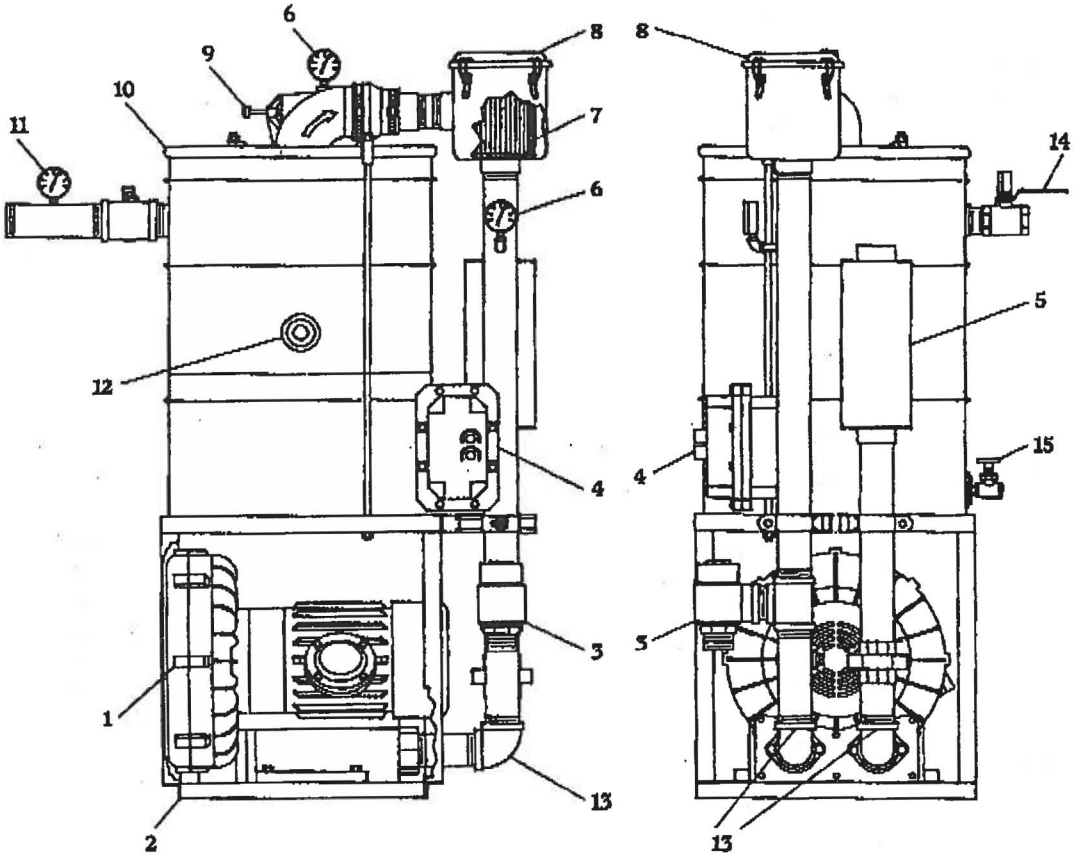

FEATURES

1. Appropriately-sized, explosion-proof Rotron regenerative blower.
2. Coated carbon steel frame.
3. Optional pressure relief valve.
4. Optional NEMA 7 enclosed manual starter for hazardous location with thermal overload protection.
5. Optional blower muffler.
6. Standard vacuum gauges.
7. Replaceable air filter element.
8. In-line air filter.
9. Integral vacuum relief valve.
10. Appropriately-sized moisture separator.
11. Optional vacuum gauge.
12. Optional high-level switch.
13. Oversized piping.
14. Air dilution valve.
15. Fluid/sludge drain.

CARBONAIR®
ENVIRONMENTAL SYSTEMS
2731 Nevada Avenue North
New Hope, MN 55427
612-544-2154 phone 800-526-4999
612-544-2151 fax

STANDARD SYSTEM FEATURES

- Appropriately-sized, explosion-proof Rotron regenerative blower.
- Low loss in-line filter with replaceable filter element.
- High-efficiency moisture separator with manual fluid/sludge drain.
- Oversized piping.
- Vacuum relief valve to provide blower protection from excessive vacuum inlet line restrictions.
- Two vacuum gauges to monitor system differential.
- All system components mounted on a coated carbon steel skid, easily moved with optional wheel assembly or two-wheel cart.

OPTIONS

- NEMA 7 enclosed manual starter switch for hazardous locations, with thermal overload protection.
- NEMA 3R or 4 enclosed manual starter switch.
- Custom control panel with appropriate NEMA enclosure.
- UL-listed control panel.
- Blower muffler.
- Additional vacuum gauges.
- High-level alarm switch for moisture separator.
- Temperature gauges.
- Pressure relief, throttling, and air make-up valves.
- Discharge pump for moisture separator with explosion-proof level controls.
- Trailer-mounting or custom enclosure.
- Calibrated flow monitoring assemblies.
- Lightweight, easily transportable pilot test systems.
- Optional wheel assembly.

SPECIFICATIONS - Single Phase

CES MODEL NUMBER	CE 404/1	CE 454/1	CE 505/1	CE 606/1	CE 707/1	CE 808/1
Maximum scfm	107	127	160	200	280	345
Minimum scfm	0	0	80	30	80	200
Maximum Vacuum	-52"WC	-59"WC	-50"WC	-75"WC	-84"WC	-64"WC
Motor Enclosure	EP	EP	EP	EP	EP	EP
Blower HP	1.0	1.5	2.0	3.0	5.5	5.5
Voltage	115/230	115/208-230	115/230	208-230	230	230
Maximum Blower Amps	14.5/7.2	19.4/9.7-9.0	22/11	15.5-14.5	29.9	32
Phase	1	1	1	1	1	1
Discharge Pipe Size	1½"	1½"	1½"	2"	2½"	2½"
Shipping Weight	192 lbs.	204 lbs.	214 lbs.	250 lbs.	410 lbs.	550 lbs.
System Dimensions (HxLxW)	56"x28"x23"	56"x28"x23"	56"x38"x23"	56"x28"x23"	70"x43"x28"	70"x43"x28"

SPECIFICATIONS - Three Phase

CES MODEL NUMBER	CE 404/3	CE 454/3	CE 505/3	CE 606/3	CE 707/3	CE 808/3
Maximum scfm	107	127	160	200	280	345
Minimum scfm	0	0	60	30	85	80
Maximum Vacuum	-52" WC	-59" WC	-60" WC	-75" WC	-87" WC	-97" WC
Motor Enclosure	EP	EP	EP	EP	EP	EP
Blower HP	1.0	1.5	2.0	3.0	5.0	7.5
Voltage	208-230/460	230/460	230/460	230/460	230/460	230/460
Maximum Blower Amps	3.5/1.8	4.8/2.4	6.2/3.1	7.6/3.8	15.8/7.9	18.6/9.3
Phase	3	3	3	3	3	3
Discharge Pipe Size	1½"	1½"	1½"	2"	2½"	2½"
Shipping Weight	185 lbs.	198 lbs.	205 lbs.	226 lbs.	340 lbs.	470 lbs.
System Dimensions (HxLxW)	56"x28"x23"	56"x28"x23"	56"x28"x23"	56"x28"x23"	67"x43"x28"	67"x43"x28"

All specifications are subject to change without notice.

PRINTED ON RECYCLED PAPER

Product Data Sheet EE204-97
© 1997 by Carbonair

EN/CP 808
Explosion-Proof Regenerative Blower

FEATURES
- Manufactured in the USA
- Maximum flow: 350 SCFM
- Maximum pressure: 90 IWG
- Maximum vacuum: 97 IWG
- Standard motor: 7.5 HP, explosion-proof
- Cast aluminum blower housing, cover, impeller & manifold; cast iron flanges (threaded); teflon lip seal
- UL & CSA approved motor with permanently sealed ball bearings for explosive gas atmospheres Class I Group D minimum
- Sealed blower assembly
- Quiet operation within OSHA standards

MOTOR OPTIONS
- International voltage & frequency (Hz)
- Chemical duty, high efficiency, inverter duty or industry-specific designs
- Various horsepowers for application-specific needs

BLOWER OPTIONS
- Corrosion resistant surface treatments & sealing options
- Remote drive (motorless) models
- Slip-on or face flanges for application-specific needs

ACCESSORIES (See Catalog Accessory Section)
- Flowmeters reading in SCFM
- Filters & moisture separators
- Pressure gauges, vacuum gauges & relief valves
- Switches – air flow, pressure, vacuum or temperature
- External mufflers for additional silencing
- Air knives (used on blow-off applications)

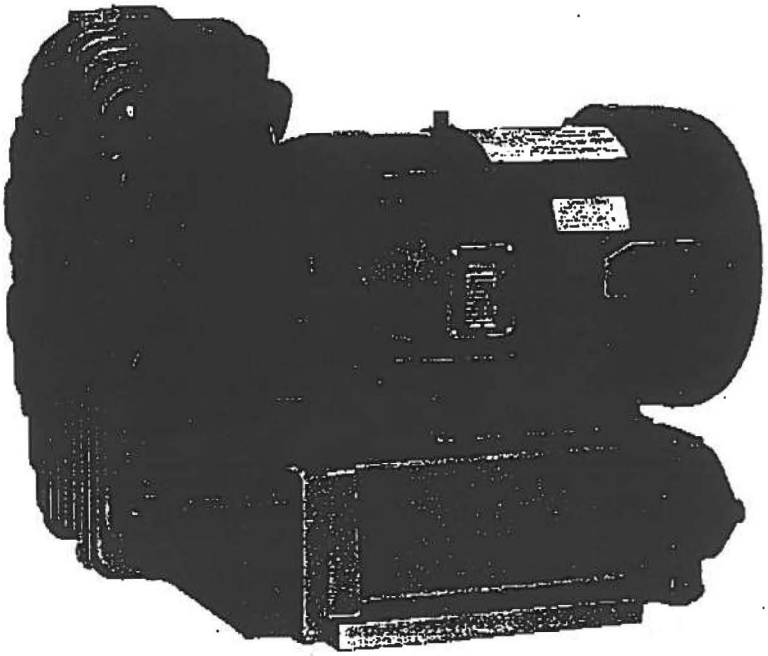

BLOWER PERFORMANCE AT STANDARD CONDITIONS

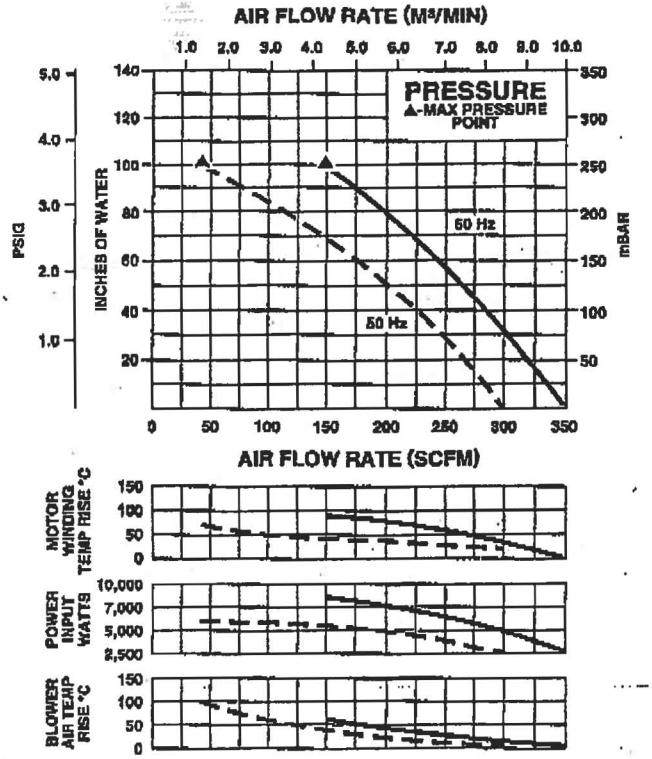

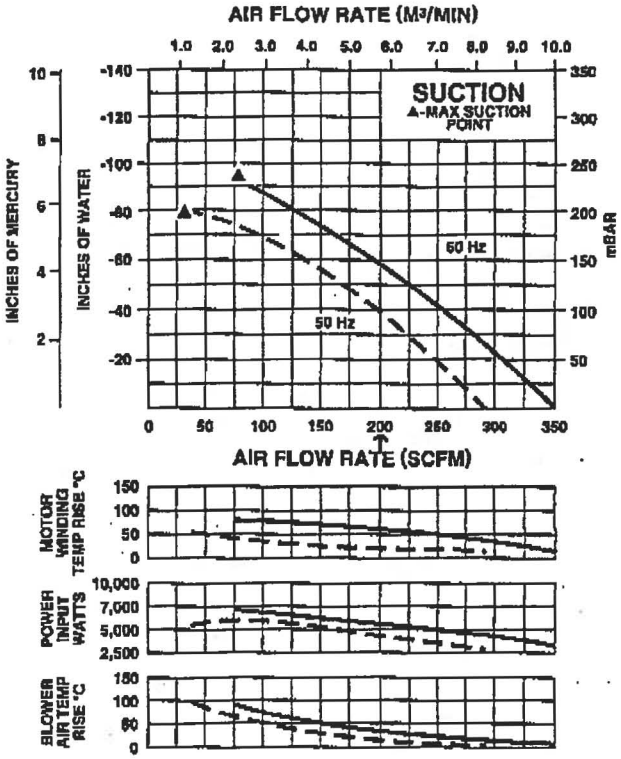

EG&G ROTRON, SAUGERTIES, N.Y. 12477 • 914/246-3401 • FAX 914/246-3802

EN/CP 808
Explosion-Proof Regenerative Blower

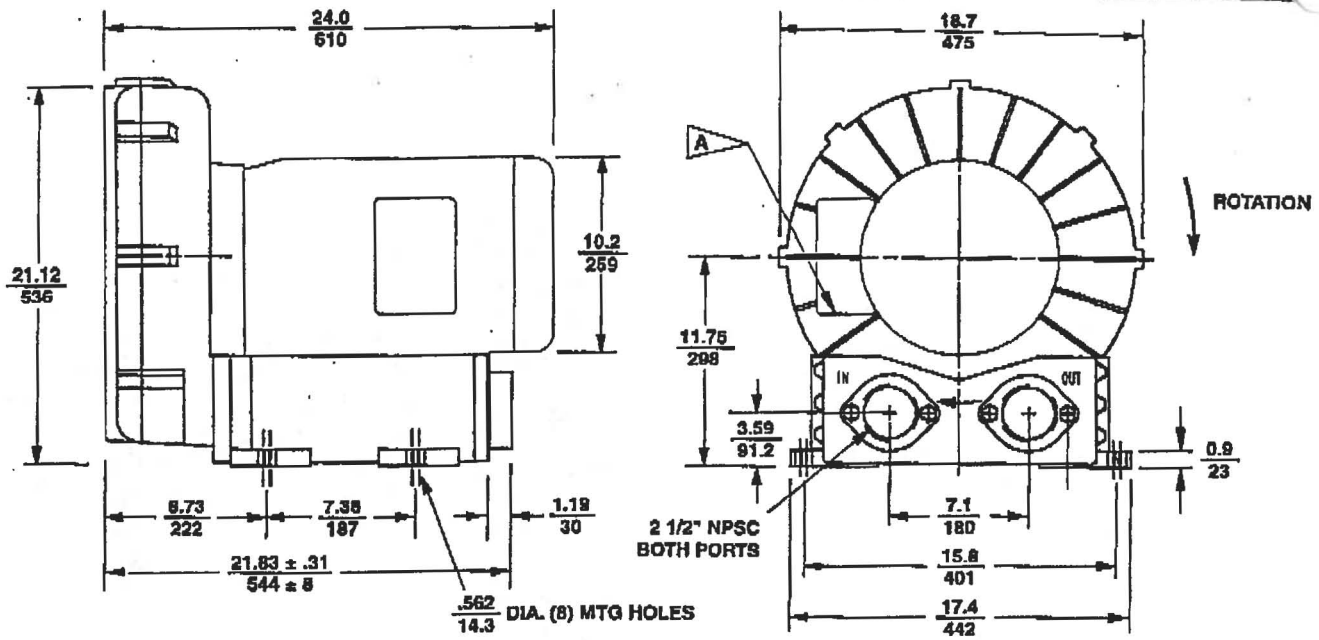

DIMENSIONS: IN / MM
TOLERANCES: .XX ± .1 / 2.5
(UNLESS OTHERWISE NOTED)

A — 0.75" NPT CONDUIT CONNECTION AT 12 O'CLOCK POSITION

SPECIFICATIONS

MODEL	EN808BA72MXL		EN808BA86MXL	CP808FY72MXLR
Part No.	038729		038731	038976
Motor Enclosure – Shaft Material	Explosion-proof – CS		Explosion-proof – CS	Chem XP – SS
Horsepower	7.5		7.5	Same as EN808BA72MXL – 038729 except add Chemical Processing (CP) features from catalog inside front cover
Phase – Frequency [1]	Three - 60 Hz		Three - 60 Hz	
Voltage [1]	230	460	575	
Motor Nameplate Amps	17	8.5	7.4	
Max. Blower Amps [3]	26	13	8.1	
Inrush Amps	126	63	56	
Starter Size	1	1	1	
Service Factor	1.0		1.0	
Thermal Protection [2]	Class B - Pilot Duty		Class B - Pilot Duty	
XP Motor Class – Group	I-D, II-F&G		I-D, II-F&G	
Shipping Weight	304 lb (138 kg)		304 lb (138 kg)	

1 Rotron motors are designed to handle a broad range of world voltages and power supply variations. Our dual voltage 3 phase motors are factory tested and certified to operate on both: **208-230/415-460 VAC-3 ph-60 Hz** and **200-220/400-440 VAC-3 ph-50 Hz.** Our dual voltage 1 phase motors are factory tested and certified to operate on both: **104-115/208-230 VAC-1 ph-60 Hz** and **100-110/200-220 VAC-1 ph-50 Hz.** All voltages above can handle a ±10% voltage fluctuation. Special wound motors can be ordered for voltages outside our certified range.

2 Maximum operating temperature: Motor winding temperature (winding rise plus ambient) should not exceed 140°C for Class F rated motors or 120°C for Class B rated motors. Blower outlet air temperature should not exceed 140°C (air temperature rise plus inlet temperature). Performance curve maximum pressure and suction points are based on a 40°C inlet and ambient temperature. Consult factory for inlet or ambient temperatures above 40°C.

3 Maximum blower amps corresponds to the performance point at which the motor or blower temperature rise with a 40°C inlet and/or ambient temperature reaches the maximum operating temperature.

Specifications subject to change without notice. Please contact factory for specification updates.

EG&G ROTRON

Filtration Accessories

Blower Connection Key
NPT – American National Standard Taper Pipe Thread (Male)
NPSC – American National Standard Straight Pipe Thread for Coupling (Female)
SO – Slip On (Smooth – No Threads)

Moisture Separator™

By separating and containing entrained liquids, Rotron's moisture separator helps protect our regenerative blowers and the end treatment system from corrosion and mineralization damage. Recommended for all soil vacuum extraction applications.

SPECIFICATIONS:

SEPARATION METHOD – High Efficiency Cyclonic
RELIEF VALVE MATERIAL – Brass & Stainless Steel
FLOAT MATERIAL – Copper
FLOAT SWITCH – SPDT, Explosion-proof
NEMA 7&9, 5 Amp max.

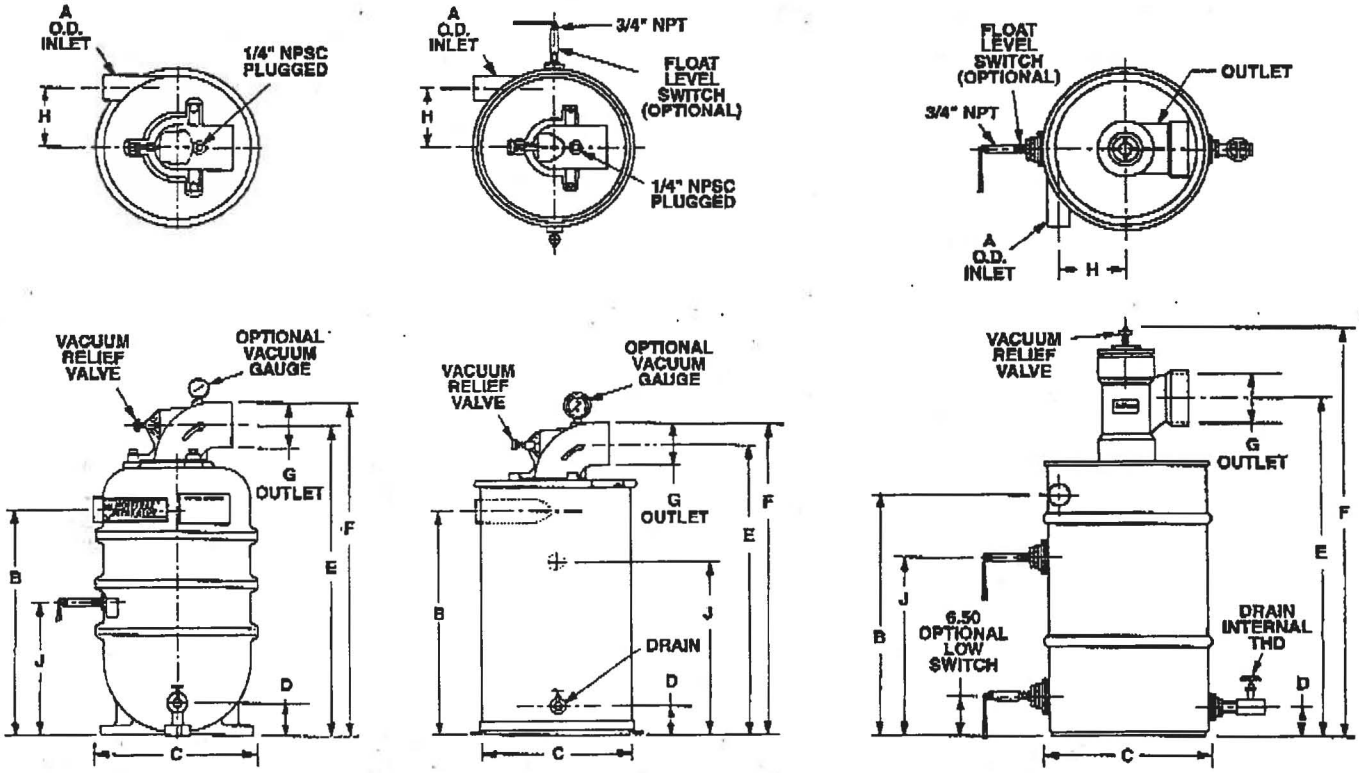

PLASTIC "P" DESIGN

METAL "D" DESIGN

METAL "B" DESIGN

Model	Part No.	CFM Max.	A Dia.	B	C Dia.	D	E	F	G Dia.	H	J Switch	Drain Internal THD	Shipping Weight
MS200PS	038519	200	2.38	22.46	16.42	3.25	31.05	33.30	4.50 OD	6.00	13.25	3/4" NPT	42 lb.
MS300PS	038520	300	2.88										
MS200DS	080086	200	2.00	22.12	16.75	2.75	27.92	30.17		6.81	12.62		
MS300DS	080087	300	2.50							6.56			
MS350BS	038357	350	3.25	28.00	23.00	4.00	37.25	39.50	6.63 ID	9.75	17.50	1" NPT	82 lb.
MS500BS	038354	500					37.37	54.50					95 lb.
MS600BS	038353	600	4.00	27.50						9.25			96 lb.
MS1000BS	038914	1000	6.00	31.00	27.00		47.32	51.70	9.25 OD	10.00	19.88		150 lb.

Models without float switch available. Metal MS200/300DS models are not the standard stocked, but are available.

EG&G ROTRON, SAUGERTIES, N.Y. 12477 • 914/246-3401 • FAX 914/246-3802

Blower Model Reference Key	
A = SPIRAL	E = DR/EN/CP 606, S543, 6, 623, S7, S75
B = DR/EN/CP 068, 083, 101, 202	F = DR/EN/CP 707, 808, S65, 858, S9, P9 (Inlet Only)
C = DR/EN/CP 303, 312, 313, 953	G = DR/EN/CP 823, S13, P13 (Inlet Only)
D = DR/EN/CP 404, 454, 513, 505, 555, 523	H = DR/EN/CP 909, 1223, 14, S15, P15 (Inlet Only)

2.0 Moisture Separator™ Specifications

2.1 DUTY

The moisture separator shall be designed for use in a soil vapor extraction system capable of continuous operation with a pressure drop of less than six inches of water at the rated flow of _____ SCFM. The separator shall be capable of operation under various inlet conditions ranging from a fine mist to slugs of water with high efficiency.

2.2 PRINCIPLE OF OPERATION

The moisture separator shall incorporate cyclonic separation to remove entrained water. The separator must protect against an overflow by fail safe mechanical means. An electrical switch or contact(s) alone is not an acceptable means of protection against overflow, but is a good backup.

2.3 CONSTRUCTION

The body of the moisture separator shall be constructed of heavy wall plastic or heavy gauge cold rolled steel. The steel interior and exterior shall be epoxy (powder) coated to resist abrasion, corrosion, and chipping that might expose the surface. The inlet shall be tangentially located and welded to the body. The outlet port shall be constructed of PVC or cast aluminum alloy, flanged and sealed to the center of the top of the separator. The separator shall incorporate a non-sparking copper float ball and an adjustable relief valve to protect against overflow and overheating the blower.

2.4 CAPACITY AND DIMENSIONS

The moisture separator must have a liquid capacity of _____ gallons. The inlet shall be _____ inch OD slip-on type. The outlet shall be _____ inch OD slip-on type.

For DR/EN/CP Blower Model	Selector Moisture Separator Model	Liquid-holding Capacity (gallons)	Inlet (OD)	Outlet	Max Vacuum Allowed (IHg)
404 454 505 513	MS200PS	7	2.36	4.5" OD	12
523 555 623 823	MS200DS	10	2.0		22
606 6	MS300PS	7	2.88		12
707	MS300DS	10	2.5		22
808	MS350BS	40	3.25		
858 1223	MS500BS			6.63" ID	
909	MS600BS		4.0"		
14	MS1000BS	65	6.0"	9.25" OD	

2.5 PRESSURE DROP

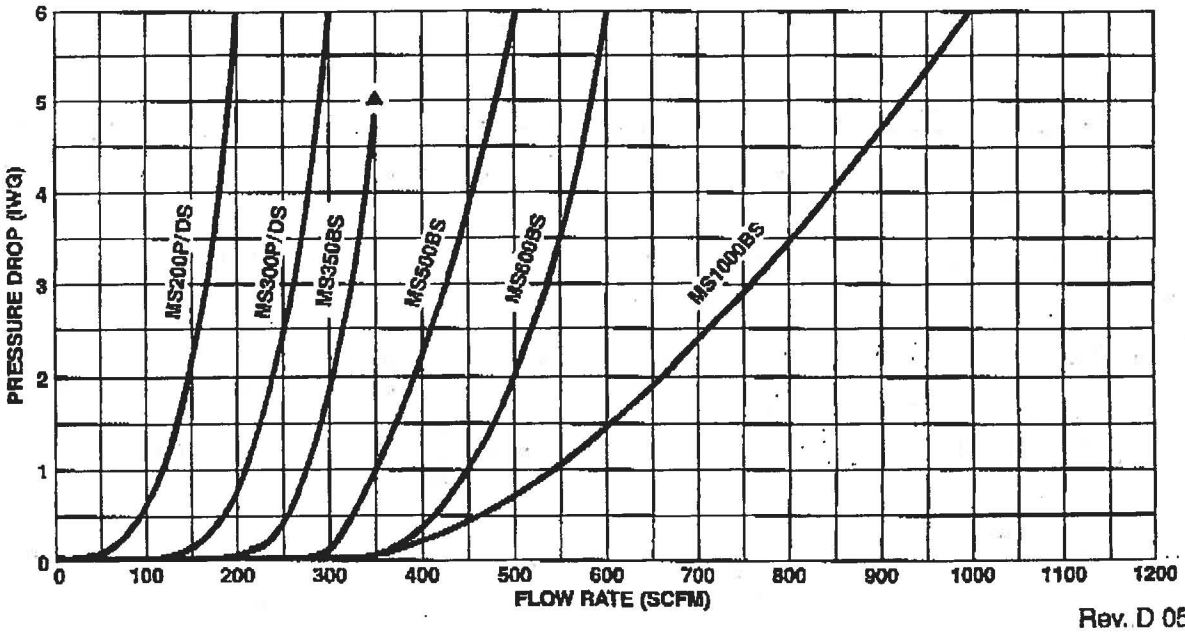

Rev. D 05/05/00

10/20/98

CARBONAIR®

Terms & Conditions

ACCEPTANCE: This proposal is an invitation for an offer and will become a binding contract when accepted.

LIMITATION OF PROPOSAL: The prices and terms quoted in this proposal are subject to acceptance by the Purchaser within a period of (30) calendar days from the date heron.

EXCLUSIONS: This proposal is based solely and completely on specifications submitted to Carbonair Environmental Systems, Inc. (Carbonair) at the time of the writing of the proposal. General plans and specification not actually submitted shall not apply. This proposal, together with all annexed specifications, when accepted, shall be the complete agreement between the parties; and any alternations or unusual and undisclosed conditions or deviations from the above specifications involving extra costs shall be agreed upon in writing by both parties and shall become an additional charge over and above the proposal price set forth herein.

Delays or impossibility of performance by Carbonair because of strikes, accidents, or other reasons beyond the control of Carbonair shall relieve us from all liability herein.

SHIPMENT: Time of shipment shall be no longer than eight to ten (8-10) weeks after receipt of order and acceptance and final approval of all drawings and submittal.

TERMS OF PAYMENT: To purchasers with approved credit, net 30 days upon receipt of invoice following shipment. We reserve the right to cancel the contract or cease work if payments thereon are not received when due. 1.5% per month shall be charged on all unpaid balances.

TAXES: Any local, state or federal sales, excise or use tax imposed on the equipment or work covered by this proposal shall be paid by the Purchaser in addition to the prices quoted.

WARRANTY LIMITATION: There are no warranties which extend beyond the warranties herein after expressed.

WARRANTIES: All work shall be done in a workmanlike manner according to standard practices. We warrant performance against defects in workmanship for a period of twelve (12) months from date of shipment. We agree to pass on to the Purchaser such warranties, if any, as may be extended by the manufacturer for material supplied. Labor for replacing defective materials shall not be provided by us unless it is specifically spelled out in the proposal. We shall not be responsible for materials damaged, lost or stolen after delivery, through no fault of ours, or for failure to deliver and perform because of reasons beyond our control.

EXCLUSIVE REMEDIES: Remedies are limited to the repair or replacement at FOB point of delivery. Consequential damages are excluded. In no event shall Carbonair be responsible for consequential damages of any such defective material or workmanship including, but not limited to, the Purchaser's loss of material or profits, increased expenses of operation, downtime or reconstruction of the work, and in no event shall Carbonair's obligation under this warranty exceed the original contract price of the defective item. It is agreed that any action for breach of express or implied warranty shall be initiated within fifteen (15) months of the date of shipment by Carbonair and only those defects that are documented to have occurred within twelve (12) months of shipment will be covered by the warranty.

DISCLAIMER: Carbonair will not be responsible for damage to equipment or materials through improper installation, storage, improper services, or through attempts to operate it in excess of it rated capacity or recommended use, intentional or otherwise, by parties other than Carbonair or its authorized representatives.

CONDITIONS OF SALE: Prices quoted are those now in effect. Seller reserves the right to bill at the prices in effect at the time of shipment if the proposal is not accepted in writing within thirty (30) days, unless a longer term of validity is in writing on the proposal.

LIMITATIONS OF LIABILITY

A. Neither Seller nor its suppliers of any tier will be liable to Purchaser, whether in contract, in tort (including negligence and strict liability), under any warranty or otherwise, for any special, indirect, incidental, or consequential loss or damage whatsoever, or for loss of or to the plant, loss of use of equipment or power system, cost of capital, loss of profits or revenue or the loss of use thereof, cost of environmental damage or clean-up, or claims of customers of Purchaser. The remedies set forth herein are exclusive, and the total cumulative liability of seller and it suppliers under any purchase order or any act or omission in connection therewith or related thereto, whether in contract, in tort (including negligence and strict liability), under any warranty, or otherwise, will be limited to the price of the contract.

B. The provisions of this Article shall survive termination, cancellation or expiration of the purchase order and shall apply, notwithstanding any other provisions of this Agreement or any related document thereto, to the fullest extent permitted by law. Prior to the transfer of any equipment or material furnished or for which work is furnished hereunder from the project site (except temporarily for repair work or permanently for disposal), or the transfer of any interest therein or in the plant, Purchaser shall obtain for Seller written assurances from the transferee of limitation of and protection against liability following the proposed transfer at least equivalent to that afforded seller and its suppliers under the purchase order.

Geotextile Filter Fabric Specification

NON-WOVEN GEOTEXTILE FILTER FABRIC

Geotextile filter fabric shall be a non-woven polypropylene and shall meet the following physical characteristics:

PROPERTY	UNIT	MINIMUM VALUE	TEST METHOD
Weight	oz/sy	6	ASTM D 3776
Grab Strength	lbs	150	ASTM D 4632
Grab Elongation	%	50	ASTM D 4632
Trapezoid Tear Strength	lbs	60	ASTM D 4533
Mullen Burst Strength	psi	315	ASTM D 3786
Puncture Strength	lbs	90	ASTM D 4833[1]
Permittivity	sec^{-1}	1.3	ASTM D 4491[2]
Apparent Opening Size (AOS)	U.S. Std Sieve	70	ASTM D 4751
Ultraviolet Stability	%[3]	70	ASTM D 4355

Notes:

(1) Tension testing machine with ring clamp; steel ball replaced with a 5/16-inch diameter solid steel cylinder centered within the ring clamp.

(2) 5cm constant head.

(3) Percent strength retained after 150 hours.

CONTAMINANT MASS

Estimation of Contaminant Mass in Soil

Area of contaminated soil, based on both OVA screening and analytical data = 4,566 ft²

2 soil samples, collected Jan. 28, 1998, are located within the area of contaminated soil at B460.

sample ID	TRPH concentration
CUB00205	6,400 mg/kg
CUB00605	8,700 mg/kg

Both samples were collected from a depth of 4' bls, approx. 0.5 ft. above wtr. table at time of sample collection.

Assume avg. TRPH concentration is the concentration through entire volume of contaminated soil. This is a conservative estimate, since contamination is believed to be lower at shallower depths (based on OVA screening results).

Avg. TRPH concentration = 7,550 mg/kg ✓

Three rounds of depth to groundwater readings were collected at Bldg. 460, and the average depth was greatest on June 1, 1995 (5.1 ft. bls) ✓
∴ Disregarding thickness of asphalt overlying soil contamination, contaminated zone is approx. 5 feet thick

Mass = ρV where ρ = soil density ≅ 65 kg/ft³

V = (concentration)(Area)(Thickness of layer)(porosity, n assumed 0.25)

$$= 65 \frac{kg}{ft^3}\left[\left(7550 \frac{mg}{kg}\right)(4566\ ft^2)(5\ ft)(0.25)\right]$$

$$= 2.80 \times 10^9\ mg \times \frac{g}{1000 mg} \times \frac{kg}{1000 g} = \boxed{2{,}800\ kg}$$ ✓

or $2800\ kg \times \frac{2.2\ lb}{kg} = 6162\ lb.$ ✓

Because site gw concentrations do not exceed 3000 ppb, mass of contaminants in smear zone may be considered negligible (Guidelines for Assessment and Removal of Petroleum-Contaminated Soil, Appendix F, FDEP, 1998). ✓

Estimation of Contaminant Mass in Soil

Area of contaminated soil to be excavated ≅ 86 ft^2

Soil sample BQ B01105 (collected Jan. 29, 1998) is located within area to be excavated.

TRPH concentration = 14,000 mg/kg

Mass = ρV where: ρ = soil density ≅ 65 kg/ft^3

V = (Concentration)(Area)(Thickness of layer)(n)

n = porosity, assumed 0.25

Assume, to be conservative, TRPH concentration is 14,000 mg/kg throughout

Average wtr. table depth measured at site on May 31, 1995 = 6.6 ft ✓

Three rounds of depth to ground water readings were collected at B1587, and the average depth was greatest on May 31, 1995 (6.6 ft bls) ✓

Because site gw concentrations do not exceed 3000 ppb, mass of contaminants in smear zone may be considered negligible (Guidelines for Assessment and Source Removal of Petroleum contaminated soil, Appendix F, FDEP, 1998)

$$\text{Mass} = \rho V$$

$$= 65\,\frac{kg}{ft^3}\left[\left(14000\,\frac{mg}{kg}\right)(86\,ft^2)(6.6\,ft)(0.25)\right]$$

$$= 1.29\times10^8\,mg \times \frac{g}{1000\,mg} \times \frac{kg}{1000\,g} = \boxed{129\,kg}$$ ✓

$$129\,kg \times \frac{2.2\,lb}{1\,kg}$$ or 284 lb. ✓

SOIL EXCAVATION VOLUME - BUILDING 1587

RCb 1/2

VOLUME OF CONTAMINATED SOIL TO BE EXCAVATED AT BUILDING 1587

The approximate extent of excessively contaminated soil to be excavated is shown on Figure 4-6. The vertical extent of excessively contaminated soil varies slightly due to sample depth, groundwater fluctuations in the capillary zone, depth to water at the time of sample acquisition, and topographic elevation differences between sample locations.

Depth to groundwater measurements for monitoring wells at Building 1587 were obtained during the CA and supplemental assessment on May 31, 1995, September 19, 1995, and January 29, 1998. Water table elevations were lowest on May 31, 1995, and, therefore, represent a more conservative depth for excavation calculations.

Calculations for soil excavation are based on the average depth to groundwater at Building 1587, as measured on May 31, 1995. On that date, the average depth to groundwater at the site was 6.6 feet, or approximately 7 feet bls. The depth to groundwater should be measured in the nearest monitoring well (MW04) prior to soil excavation. The soil excavation shall continue to a depth approximately 1 foot below the water table at the time of excavation. The depth used to calculate the volume of soil to be excavated is 8 feet bls.

The volume of excessively contaminated soil was estimated as shown in the table below.

Building 1587: Soil Excavation		
Area (ft^2)	86	
Volume (ft^3) (assuming 8 feet thick)	688	✓
Volume (yd^3)	25	✓
Corrected Volume (yd^3) (12% swell factor)	29	✓
Mass (tons) (1.4 tons per yd^3)	40	✓

Notes:

ft^2 = square feet.
ft^3 = cubic feet.
yd^3 = cubic yards.
% = percent.
All values are rounded to nearest whole number.
Swell factor obtained from attached table.

Approximately 40 tons of excessively contaminated soil are to be excavated from Building 1587.

RCL 2/2

Percentage Swell and Load Factors of Materials		
Material	Swell, %	Load Factor
Cinders	45	0.69
Clay, dry	40	0.72
Clay, wet	40	0.72
Clay and gravel, dry	40	0.72
Clay and gravel, wet	40	0.72
Coal, anthracite	35	0.74
Coal, bituminous	35	0.74
Earth, dry loam	25	0.80
Earth, wet loam	25	0.80
Gravel, wet	12	0.89
Gravel, dry	12	0.89
Gypsum	74	0.57
Hardpan	50	0.67
Limestone	67	0.60
Rock, well blasted	65	0.60
Sand, dry	12	0.89
Sand, wet	12	0.89
Sandstone	54	0.65
Shale and soft rock	65	0.60
Slag, bank	23	0.81
Slate	65	0.60
Traprock	65	0.61

References: Florida Department of Environmental Protection, *Guidelines for Assessment and Remediation of Petroleum Contaminated Soil*, May, 1998.

Merritt, Frederick S., Ed., 1983, *Standard Handbook for Civil Engineers, Third Edition*: McGraw-Hill Book Co., New York, Ch. 13 p. 17.

APPENDIX D

BASIS OF DESIGN

BASIS OF DESIGN
U.S. Naval Station Mayport
RAP, Building 460

The purpose of the Remedial Action Plan (RAP) is to present a plan for remediation of petroleum contamination at Buildings 460 and 1587, in accordance with the requirements of Chapter 62-770, Florida Administrative Code (FAC) (effective September 23, 1997). Implementation of this RAP will include the following tasks:

Building 460

Vacuum enhanced extraction, treatment of soil vapor; and
Monitored natural attenuation of the petroleum-contaminated groundwater.

Building 1587

Source zone reduction via soil excavation, disposal; and
Monitored natural attenuation of the petroleum-contaminated groundwater.

BUILDING 460

Remedial Action Considerations

Based on field data and laboratory analytical results, as presented in this RAP as well as in the Contamination Assessment Report (CAR) and CAR Addendum, the site conditions at Building 460 are as follows.

Building 460 houses the Navy Federal Credit Union at NAVSTA Mayport. NAVSTA Mayport has not been included on the Base Realignment and Closure (BRAC) list, and therefore site use is not anticipated to change significantly. There are no known receptors for contamination at Building 460, and the potential for offsite migration of contaminants is considered minimal.

Soils encountered during installation of monitoring wells in 1995 consisted of fine-grained, loose to medium-density, poorly sorted sand to a depth of approximately 4 feet bls, underlain by fine-grained sand mixed with gray clay. Based on OVA headspace readings and analytical data, the lateral extent of contaminated soil is approximately 4,566 ft^2. Based on a groundwater depth of approximately 5 feet bls, the estimated volume of contaminated soil is 22,830 ft^3 (846 yd^3).

The depth to groundwater varies from approximately 2 to 5 feet bls, and fluctuates based on seasonal and tidal influence. The general groundwater flow direction in the surficial aquifer is north-northeast. No free product has been detected in site monitoring wells. Results of slug tests conducted June 9, 1995 indicate hydraulic conductivity (K) values of 5.17 to 6.63 feet per day (ft/day). Based on an average K of 5.90 ft/day and gradient of 0.0006 ft/ft (based on the June 1995 groundwater elevation data), the average linear pore water velocity (V) beneath the site was calculated to be 0.014 ft/day or 5.11 feet per year.

The chemicals of concern for media at Building 460 are: soil, TRPH and benzo(a)anthracene; soil (leaching), napthalene; and groundwater, MTBE.

A vacuum enhanced soil vapor extraction (SVE) system will be installed in the area of known soil contamination. Due to the shallow water table at Building 460, soil vapors shall be removed from the vadose zone through a horizontal vacuum enhanced extraction (VEE) well, or vapor extraction trench (VET). The VET shall be installed along the long axis of the elongated area of contaminated soil in order to maximize recovery of soil vapor from the vadose zone. Negative pressure induced in the VET will draw volatilized hydrocarbons from the vadose zone. The extracted hydrocarbon vapors will be treated above ground using Granular Activated Carbon (GAC) for a period of at least 30 days (Chapter 62-770 (5)(a) FAC). The spent activated carbon will require regeneration or disposal. Treatment of extracted vapors may be discontinued after 30 days if the mass of total VOC emissions is less than 13.7 lbs/day. It is anticipated that treatment of extracted soil vapor will be discontinued after the required 30-day period. Four air vent pipes will be installed at varying radial distances from the VEE well along its length, and will be used for the dual purpose of supplying fresh air to the vadose zone and collecting vacuum readings within the vadose zone during monitoring of the system.

Contaminated soil at Building 460 is located beneath a cover of asphalt, concrete, and the edges of two buildings. These features will act as a cap during operation of the SVE system, preventing short circuiting of the system and increasing the area of influence of the horizontal VET. The contaminated soil is assumed to extend from beneath the pavement covering the site to a depth of approximately 5 feet bls.

In order to prevent extraction of groundwater due to a fluctuating water table elevation, water level sensors shall be installed in existing monitoring well MW-07, which is near the location of the VET. A high level sensor will initiate shut-down of the SVE system when groundwater rises to a level of 3.5 feet bls or shallower, and a second sensor will cause the system to restart once groundwater levels have dropped to 4 feet bls.

Because a SVE pilot study has not been conducted at Building 460, it will be necessary to conduct startup testing of the SVE system once it is installed. Data collected during startup testing will be used to adjust the vacuum pressure and flow rate in the VET necessary to achieve the remedial goals for COCs in the soil. The concentrations of extracted vapors will also be monitored through an effluent port during startup testing. Vacuum readings collected from the gas vent/vapor observation probes located at varying distances along the length of the extraction well will be used to establish the effective radius of influence of the VET.

The overall performance of the SVE system will be evaluated based on the following data collected during system monitoring: vapor flow rate from the horizontal extraction well, effluent vapor concentrations, and vacuum readings from vapor observation probes located throughout the area of contaminated soil. Cleanup of the contaminated soil shall be considered complete once the concentration of extracted vapors reaches asymptotic levels, and soil samples collected from the vicinity of soil borings SB-2 and SB-6 indicate that concentrations of the COCs (i.e, benzo(a)anthracene, TRPH, and napthalene (leaching)) are below their respective State cleanup criteria.

It is estimated cleanup of the soil will be complete in 5 months and that the SVE system will be in operation for 1 year.

Concurrent with implementation of SVE at Building 460, groundwater monitoring will be conducted to assess natural attenuation of the COC (i.e., MTBE) in groundwater. The groundwater monitoring program will be performed in accordance with the requirements of 62-770.690 FAC. Groundwater samples will be collected from five monitoring wells, one located in the area of maximum COC concentration, one located downgradient, and three background wells. Existing wells MW04 (source area well), MW03 (downgradient well), and MW01, MW02, and MW07 (background wells) may be used for the natural attenuation monitoring program. Samples collected from MW03 and MW04 will be analyzed for COCs and natural attenuation parameters, and samples from the three background wells will be analyzed for natural attenuation parameters only. Groundwater sampling will be conducted quarterly for the first year and semi-annually for additional years, if necessary, to verify that the contaminant mass and mobility are being effectively reduced by natural attenuation. Water-level

measurements will be collected during each sampling event. The designated wells will be analyzed for the contaminant of concern for groundwater at Building 460 (e.g., MTBE) and natural attenuation parameters during each sampling event to establish trends and supporting evidence that natural attenuation is occurring.

If two consecutive sampling events show that the concentration of MTBE is below the State GCTL, natural attenuation monitoring may be considered complete. A Site Rehabilitation Completion Report shall be completed and submitted to the FDEP for review (62-770.690 FAC). On the other hand, if the data collected at any time during the monitoring period indicate plume migration or a risk to human health, the sampling frequency will be adjusted accordingly and/or a contingency plan will be developed, approved by FDEP, and implemented.

Because the proposed remedial action for Building 460 will include active treatment of contaminated soil, and since the maximum detected concentration of MTBE in groundwater (36 ug/L) only slightly exceeds its GCTL (35 ug/L), it is anticipated that the groundwater will achieve No Further Action levels within 1 year of monitoring.

After remedial activities have been successfully implemented at Building 460, remediation of the petroleum contamination at the site will be considered complete, and a No Further Action qualification will be proposed to the FDEP.

BUILDING 1587

Remedial Action Considerations

Based on field data and laboratory analytical results, as presented in this RAP as well as in the Contamination Assessment Report (CAR) and CAR Addendum, the site conditions at Building 1587 are as follows.

Building 1587 houses the Bachelor's Enlisted Quarters (BEQ) at NAVSTA Mayport. NAVSTA Mayport has not been included on the Base Realignment and Closure (BRAC) list, and therefore site use is not anticipated to change significantly. There are no known receptors for contamination at Building 1587, and the potential for offsite migration of contaminants is considered minimal.

Soils encountered during installation of monitoring wells in 1995 consist of fine-grained, poorly sorted, silty sand to a depth of approximately 4 feet bls, underlain by fine-grained sand mixed with gray clay and shell fragments. Based on OVA headspace readings and analytical data, the lateral extent of contaminated soil is approximately 86 ft^2.

The depth to groundwater varies from approximately 2 to 8 feet bls, and fluctuates based on seasonal and tidal influence. The general groundwater flow direction in the surficial aquifer is north-northeast. No free product has been detected in site monitoring wells.

The chemicals of concern for media at Building 1587 are: soil, TRPH and benzo(a)anthracene; soil (leaching), total xylenes and TRPH; and groundwater, benzene.

The initial remedial activity at Building 1587 will consist of direct excavation of the petroleum-contaminated soil. Excavation to a depth of 8 feet bls (approximately 1 foot deeper than the average depth-to-water measurement on May 31, 1995) is estimated to be sufficient for removal of contaminated soil in the unsaturated zone, the capillary fringe, and the water table smear zone. The total volume of soil to be excavated is 29 cubic yards (approximately 40 tons). This soil will be disposed at a permitted offsite landfill.

The excavation shall have sides sloped or shored in accordance with applicable standards to prevent unstable conditions during excavation that could pose hazards to personnel or surrounding walkway structures.

Stormwater and dust controls will also be implemented. The location of all subsurface utilities shall be field verified prior to subsurface disturbance.

One sample shall be collected from each of the sidewalls of the soil excavation and submitted for laboratory analyses. The samples should be analyzed for TRPH (Fl-PRO Method), PAHs (USEPA Method 8310) and xylenes (USEPA Method 602) to confirm that the concentrations of the COCs (i.e., TRPH, benzo(a)anthracene, and total xylene) do not exceed State SCTLs (62-770 FAC Table IV, Direct Exposure #I Residential use). Total xylenes are included in the analyses since they were determined to be a COC for leaching based on sampling conducted during the CAR Addendum. The analytical results for the soil samples should be compared to the leachability criteria contained in 62-770 FAC, Table IV. If the concentration of any analyzed compound exceeds the lower value of their respective Direct Exposure #I or leachability value, the sample should be analyzed according to the SPLP method (USEPA Method 1312). The results of the SPLP analysis are compared to GCTLs to determine whether the contaminants in soil could potentially leach to the underlying groundwater. If the concentrations of all analyzed compounds are below their respective Direct Exposure #I or leachability values, SPLP analysis is unnecessary, and there are no longer COCs for soil leaching.

Following excavation and confirmatory sampling, the site will be restored by backfilling and compacting with soil that is the same type as the surrounding material, restoring vegetation, and grading to conform to the surrounding land surface. The backfill used shall be certified free of petroleum hydrocarbon contamination.

It is estimated that approximately 2 days would be necessary for site mobilization and site staging prior to soil excavation. Approximately 3 days will be required to complete field activities (excavation, collection of sidewall samples, backfill, and sod). Excavated soils will be sampled for TCLP analysis for acceptance at a permitted landfill. An additional week is estimated for results of those laboratory analyses and subsequent transportation of soil to a landfill.

Monitored natural attenuation of groundwater will begin once source zone removal (soil excavation) is complete and shall consist of a groundwater monitoring program performed in accordance with the requirements of 62-770.690 FAC. Groundwater samples will be collected from five monitoring wells, one located in the area of maximum COC concentration, one located downgradient, and three background wells. Existing wells MW04 (source area well), MW07 (downgradient well), and MW01, MW02, and MW05 (background wells) will be used for the natural attenuation monitoring program. Samples collected from MW04 and MW07 will be analyzed for COCs and natural attenuation parameters, and samples from the three background wells will be analyzed for natural attenuation parameters only. Groundwater sampling will be conducted quarterly for the first year and semi-annually for additional years, if necessary, to verify that the contaminant mass and mobility are being effectively reduced by natural attenuation. Water-level measurements will be collected during each sampling event. The designated wells will be analyzed for the contaminant of concern for groundwater at Building 1587 (e.g., benzene) and natural attenuation parameters during each sampling event to establish trends and supporting evidence that natural attenuation is occurring.

If two consecutive sampling events show that the concentration of benzene is below the State GCTL, natural attenuation monitoring may be considered complete, a Site Rehabilitation Completion Report shall be completed and submitted to the FDEP for review (62-770.690 FAC). On the other hand, if the data collected at any time during the monitoring period indicate plume migration or a risk to human health, the sampling frequency will be adjusted accordingly and/or a contingency plan will be developed, approved by FDEP, and implemented.

Because the proposed remedial action for Building 1587 will include excavation of contaminated soil, and since the maximum detected concentration of benzene in groundwater (1.7 ug/L) only slightly exceeds its GCTL (1 ug/L), it is anticipated that the groundwater will achieve No Further Action levels within 1 year of monitoring.

After remedial activities at Building 1587 have been successfully implemented at Building 1587, remediation of the petroleum contamination at the site will be considered complete, and a No Further Action qualification will be proposed to the FDEP.

APPENDIX E

REMEDIAL ACTION PLAN CHECKLIST

REMEDIAL ACTION PLAN CHECKLIST

Bureau of Petroleum Storage Systems
Florida Department of Environmental Protection

Facility Name:	U.S. Naval Station Mayport, Buildings 460 and 1587	Preapproval Site:	[ ]
Location:	Mayport, Florida	State Cleanup Site:	[ ]
FAC ID No:		Voluntary Cleanup Site:	[✓]
Reviewer:		Date SAR Received:	
Consultant:	Harding Lawson Associates	Date SAR Approved:	

This checklist should not be applied in blanket fashion. Technical judgment may be necessary in determining the applicability of some items. However, all information listed that is relevant to the remedial design should be provided.

PAGE(S) **I. GENERAL**

front of document (1) RAP signed, sealed, and dated by Florida P.E. (per Section 471.025, FS)

Sec. 1.0 (2) indication whether proposed plan is for preapproval program, state contracted cleanup, or voluntary cleanup

Bldg 460 Fig 2.4, Fig 2.5 (3) recap of SAR information and conclusions pertinent to RAP preparation

Bldg 1587 Fig 2.7 Fig 2.8 (a) horizontal and vertical extent of contamination in soil and groundwater

460: Sec 4.1.2.1
1587: Sec 4.2.3 (b) volumes of affected soil and groundwater

Appendix C-2 (c) estimated mass of chemicals of concern in vadose zone, smear zone, and free product

460: Table 2-5
1587: Table 2-10 (d) depth to water table

460: Fig. 2-6
1587: Fig. 2-9 (e) groundwater flow direction and gradient

460: Sec. 2.1.2.4
1587: NA (f) hydraulic conductivity of aquifer and method of determination

NA (g) transmissivity of aquifer and method of determination

460: Sec. 2.1.3
1587: Sec. 2.2.3 (h) confining layer location

460: Sec. 2.1.3
1587: Sec. 2.2.3 (i) lithology of site

460: Tbls 2-2, 2-3, 2-4
1587: Tbls 2-7, 2-8, 2-9 (4) current sampling results [within nine (9) months] used for remediation system design

460: NA
1587: Sec. 2.2.1 (5) latest date underground storage tanks and product lines have tested tight

(6) potable water considerations

460: Sec. 2.1.3
1587: Sec 2.2.3 (a) method of potable water supply to area

460: Sec. 2.1.3
1587: Sec. 2.2.3 (b) locations of private wells within 1/4-mile, and public wells within 1/2-mile radius of site

NA (c) indication whether FDEP district office drinking water program was notified if contaminated groundwater could be expected to reach any public or private water well. Method of notification, person notified, and date

460: NA

1587: Sec. 4.2.5 (7) underground utilities which may enhance transport of chemicals of concern

460: App. C-1, Sec. 4.1.10
1587: App. D (8) cleanup time

(a) estimated time of cleanup: groundwater; soil

460: App C-1
1587: App D (b) method used to determine cleanup time

460: Sec. 4.1.2.5, 4.1.4
1587: Sec. 4.2.5 (9) fencing treatment area required, unless public access is restricted by institutional controls

460: Chp. 7.0
1587: NA (10) discussion of required maintenance for proposed equipment, including site visit frequency and special O&M considerations

NA (11) all local, state, and federal permits obtained and conditions stated

Cost Estimate (12) itemized cost estimate for project: capital, operation, maintenance, sampling, and closure

Cost Estimate (13) feasibility of leasing equipment considered (cost cannot exceed purchase price)

Appendix B (14) alternative analysis or discussion of other alternatives considered

NA (15) cost-effective analysis provided if design is innovative

460: Sec. 4.1.5 (16) statement that signed and sealed as-built (record) drawings will be provided

460: Sec. 4.1.2.5 and 4.1.3 (17) nuisance noise and odor to neighbors avoided by careful location of equipment items and exhaust stacks or other mitigating measures

NA (18) retainage evaluation wells per 11/15/96 guidance specified (if preapproval cleanup)

II. FREE PRODUCT REMOVAL

NA (1) free product plume identification

NA (2) description of free product recovery system

NA (3) oil/water separator sizing calculations and detention time

NA (4) free product storage tank of adequate size for reasonable maintenance frequency

NA (5) automated product pump shutdown for high level in product tank

NA (6) disposition of free product after its recovery

III. SOIL REMEDIATION - GENERAL

460: Sec. 4.1.2.1
1587: Sec. 4.2.3 (1) volume of contaminated soil

460: Sec. 2.1.1
1587: Sec. 2.2.1 (2) recap of Source Removal activities and soil volume already excavated

Section 1.2 (3) indication that contaminated soil will be remediated, or rationale for 'no action' alternative for soil remediation provided

460: Sec. 4.1.2.1
1587: Sec. 4.2.6 (4) disposition of excavated, contaminated soil

NA (5) indication that hazardous soil (e.g., ignitable, corrosive, reactive, toxic, or petroleum refining waste) will be disposed of properly

IV. LAND FARMING OF SOIL

NA (1) adequate surface area available (_____ sq ft) to spread soil 6 to 12 inches thick

NA (2) location of land farming operation

NA (3) land farming area is flat (less than 5% slope)

NA (4) impermeable base provided. Type: _____

NA (5) surface water runoff controls provided

NA (6) groundwater monitoring plan proposed if land farm is outside of immediate contamination area

NA (7) frequency of tilling provided

NA (8) frequency and details of nutrient application or other enhancements provided (if proposed)

NA (9) soil sampling frequency and sampling methods provided

NA (10) potential for land farm causing nuisance conditions evaluated

NA (11) underlying soil and groundwater monitoring procedures provided and acceptable

NA (12) land farming will be continued until the chemicals of concern are below the applicable soil cleanup target levels (SCTLs)

NA (13) cost-effectiveness evaluated

NA (14) ultimate disposition of soil discussed

NA (15) need to fence land farm area considered

Bldg 460: **V. LANDFILLING OF SOIL**

Sec. 4.2.6 (1) landfill lined and permitted by FDEP

Sec. 4.2.6 (2) name and location of landfill provided along with conditions of acceptance

Sec. 3.4.2 (3) cost-effectiveness considerations

VI. SOIL THERMAL TREATMENT

NA (1) name and location of thermal treatment facility provided

NA (2) facility is permitted for thermal treatment of petroleum contaminated soil

NA (3) indication of whether pretreatment soil samples will be collected at site or at thermal treatment facility

NA (4) cost-effectiveness evaluation

VII. COMMERCIAL BIOREMEDIATION OF SOIL

NA (1) name and location of bioremediation facility provided

NA (2) facility is permitted for bioremediation of petroleum contaminated soil

NA (3) indication of whether pretreatment soil samples will be collected at site or at bioremediation facility

NA (4) cost-effectiveness evaluation

VIII. IN SITU BIOVENTING OF SOIL

NA (1) soil cleanup criteria identification

NA (2) estimated mass of chemicals of concern in the vadose zone

(3) pilot study [per Rule 62-770.700(2), FAC]

NA (a) soil temperature, permeability, pH, moisture

NA (b) nutrient requirements

NA (c) presence of suitable indigenous microbes

NA (d) oxygen requirement (usually as pounds of air to pound of hydrocarbon degraded)

(4) layout

NA (a) location of air injection and air extraction wells with respect to contaminated soil plume location and depth

NA (b) location and depth of soil gas monitoring probes with respect to contaminated soil plume and the air injection and extraction wells

(5) mechanical details, equipment sizing calculations, and operational parameters

NA (a) well type — vertical or horizontal

NA (b) well construction details

NA (c) indication whether soil vacuum pump will be used alone (with induced influx of air from unsealed surface acting as oxygen source) or accompanied by air injection pump as oxygen source

NA (d) vacuum pump/blower specifications and horsepower

NA (e) method and design details of moisture addition if site soil is dry

NA (f) method and design details of nutrient delivery system, if necessary

NA (6) estimated cleanup time

(7) instruments, controls, gauges, and valves

NA (a) subsurface soil gas monitoring probes

NA (b) pressure gauges

NA (c) shutoff/throttling valves

NA (d) nutrient and moisture addition control devices and meters

NA (8) monitoring plan: CO_2; pertinent bioremediation parameters; chemicals of concern

(9) air emissions

NA (a) generally, no air emissions treatment necessary because vapor flow rates are so low and biodegradation of petroleum results in production of CO_2 and water

NA (b) evaluation of need for off-gas treatment if pilot test indicated that a significant amount of hydrocarbon volatilization will occur

Building 460 **IX. SOIL VACUUM EXTRACTION**

(1) prerequisites

Sec. 3.4.1 (a) relatively permeable soil

Table 2-5 (b) depth to groundwater > 3 ft

Sec. 3.4.1 (c) relatively volatile chemicals of concern

(2) pilot study [per Rule 62-770.700(2), FAC] or rationale to forego pilot study

NA (a) pilot test components designed and located for cost-effective subsequent integration into full-scale design

NA (b) diagram of pilot layout indicating location of vapor extraction well, and radial distance of monitoring wells from the vapor extraction well

NA (c) air flow rate (cfm)

NA (d) radius of influence (ft); vacuum (inches of water) at limit of radius of influence

NA (e) water elevations at monitoring wells to assess groundwater mounding; observed mound (inches)

NA (f) vacuum readings at monitoring wells and at various radial distances from extraction well to aid in full-scale design

NA (g) measurement of off-gas concentrations of volatile organic compounds (VOCs) for the purpose of selecting and sizing cost-effective off-gas treatment for full-scale system

NA (h) determination of soil's permeability (rule of thumb: permeability should be greater than 10^{-9} sq cm)

Sec. 4.1.2 (3) full-scale design

Fig 4-1 (a) location(s) and radius of influence (ft); overlapping radii for adequate coverage of contaminated soil plume

Fig.4-4 (b) vapor extraction well(s) construction details

Sec. 4.1.2.1 1) no. of wells; cfm each well; total cfm; well type (vertical or horizontal); well diameter; well depth; water table (ft bls); screen slot size; screened interval (ft bls); well sealed w/bentonite or non-shrinking grout at screen design depth to prevent short-circuiting

Sec. 4.1.2.1 2) screen location close to water table to optimize collection of vapors across vadose depth but not so close as to collect excessive water

(c) pneumatic design

Sec. 4.1.2.3 1) operating vacuum @ wellhead(s) (inches of water)

Appendix C-1 2) calculation of piping system friction losses

Appendix C-1 3) calculation of vacuum pump motor (hp) based on system losses plus required vacuum at wellhead

(d) vacuum source type: regenerative blower; positive displacement vacuum pump; other

Sec. 4.1.2.3 1) design: cfm @ inches of water; operating cfm @ inches of water

Sec. 4.1.2.3 Appendix C-1 2) mfr; model; motor hp; rpm; performance curves; hp calculations or curves

Appendix C-1 3) nonferrous materials of construction and/or assembly to minimize potential for sparking and friction

Sec. 4.1.2.3 4) explosion proof motor specified

Sec. 4.1.2.2 (e) moisture separator/condensation trap ("knock out pot") prior to inlet of vacuum pump

Sec 4.1.2.1 (f) surface sealing provided for vacuum extraction, or existing concrete or asphalt adequate

(g) safety

Appendix C-1 1) system operation at approximately 25% of Lower Explosive Limit (LEL)

Appendix C-1 2) bleed valve provided to control flammable vapor concentrations

(h) instrumentation, gauges, and appurtenances

Figure 4-3 1) vacuum gauges at each well; temperature gauges (@ vacuum pump and/or exhaust gas stack)

Figure 4-3 2) sample ports for influent from each well, and for the off-gas from the treatment unit

Figure 4-3 3) air flow control: shutoff/throttling valve at each well; other air flow control device or method

Sec. 4.1.2.4 4) high level switch in knock out pot to either shut down vacuum pump or drain the pot (w/proper disposal of the contaminated water)

(i) air emissions (general)

Sec. 4.1.2.6 1) expected concentrations and quantities of any VOCs discharged to air

Sec. 4.1.2.6 2) method of cost-effective off-gas treatment to be provided during first month of system operation (provide details in Section X or XI for carbon adsorption or thermal oxidation of off-gas, or details of any alternative method proposed)

(j) system monitoring proposal

Sec. 4.1.6 1) provision to sample and analyze air emissions for VOCs, weekly for first month, monthly for next two months, quarterly thereafter

Sec. 4.1.7 2) soil cleanup criteria provided

Sec. 4.1.2.9 3) provision for monitoring wells to serve as vacuum measurement locations (at various radial distances from extraction wells), or other provisions for verification of proper operation

Sec. 4.1.6 4) acknowledge that air emissions control must be continued until VOCs are less than 13.7 lbs/day

Building 460 **X. VAPOR-PHASE CARBON ADSORPTION** (for control of air emissions)

Secs 4.1.6, 4.1.7 (1) cost-effectiveness evaluation in comparison to other alternatives

(2) mechanical details, sizing calculations, and operational parameters

Sec. 4.1.2.3 (a) gas flow rate

App. C-1, Vendor info (b) gas temperature

Sec. 4.1.2.2 (c) effect of moisture level on adsorption

Sec. 3.4.1 (d) identification of chemicals of concern

Table 3.1 (e) concentrations of chemicals of concern

Sec. 4.1.2.6 (f) retention (expressed as a percent or pounds of chemicals of concern adsorbed per pound of carbon)

Sec 4.1.2.6 (g) carbon usage rate

Fig 4-3 (h) configuration of carbon vessels in series

Appendix-1 (i) pressure drop

Fig 4-3 (j) pressure relief valve for carbon vessels

Sec. 4.1.2.6 (k) proper disposal/regeneration and replacement of spent carbon

(3) instrumentation, controls, gauges, and valves

Fig. 4-3 (a) high pressure shutdown switch and pressure relief valve

Fig. 4-3 (b) pressure gauges

Fig 4-3 (c) temperature gauges

Fig. 4-3 (d) sampling ports

(4) safety

Fig 4-3 (a) evaluation of need to isolate carbon units from other equipment items in the process train by an in-line flame arrestor

NA (b) identification of the Lower Explosive Limit (LEL) for chemicals of concern

Appendix C-1 (c) observance of appropriate requirements in Series 500 articles of the National Electrical Code — equipment shall meet either Class I, Group D, Division 1 or Class I, Group D, Division 2 hazardous area requirements, whichever is applicable, when an equipment item is located in a hazardous area as defined by the code

XI. THERMAL/CATALYTIC OXIDATION (for control of air emissions)

NA (1) cost-effectiveness evaluation in comparison to other alternatives

(2) mechanical details, equipment sizing calculations, and operational parameters

NA (a) type — thermal or catalytic

NA (b) combustion air flow rate

NA (c) supplemental fuel type — propane or natural gas

NA (d) temperature and retention time

NA (e) stack height

NA (f) stack diameter

NA (3) instrumentation, controls, gauges, and valves: schematic or mobile unit manufacturer's drawings indicating instrumentation, controls, gauges, and valves for all process streams (contaminant-laden influent, fuel gas, and combustion air)

(4) safety considerations include, but are not limited to

NA (a) bleed valve or dilution control valve to maintain influent flammable vapor concentration at 25% of the Lower Explosive Limit (LEL)

NA (b) evaluation of whether a flame arrestor should be installed in the pipeline between thermal oxidation unit and a soil vapor vacuum extraction pump which feeds the oxidizer

NA (c) air purge prior to re-ignition

NA (d) observance of appropriate requirements in Series 500 articles of the National Electrical Code — equipment shall meet either Class I, Group D, Division 1 or Class I, Group D, Division 2 hazardous area requirements, whichever is applicable, when an equipment item is located in a hazardous area as defined by the code

NA (e) use of thermal or catalytic oxidizers which meet appropriate fire codes for handling natural or propane gas and prevention of furnace explosions — National Fire Protection Association, Industrial Risk Insurer's, Factory Mutual, etc. Some of the most important safety shutdowns for gas-fired burners occur upon: high gas pressure; low gas pressure; loss of combustion supply air; loss or failure to establish flame; loss of control system actuating energy; power failure

XII. GROUNDWATER EXTRACTION

NA (1) feasibility of using existing on-site wells for groundwater extraction considered

(2) recovery well summary

NA (a) recovery well or trench location(s) and construction details included

NA (b) recovery well depth appropriate for depth of contamination reported in SAR. The recovery well depth should optimize petroleum mass recovery relative to groundwater recovery

NA (c) well diameter

NA (d) screened interval appropriate

NA (3) predicted horizontal and vertical area of influence with hydraulic gradient provided

NA (4) expected drawdown in recovery well or trench (____ ft)

NA (5) consideration of multiple well configuration to minimize drawdown

(6) groundwater pump(s) description design

NA (a) hydraulic design considerations acceptable (including friction losses and suction lift)

NA (b) pump characteristic curve, design flow rate (_____ gpm at _____ ft TDH provided); mfr; model; motor hp

NA (7) automated well level controls provided for stopping/starting groundwater pump(s)

NA (8) totalizing flowmeter installed on influent line from each groundwater recovery pump

NA (9) check valve provided on pump discharge piping if not integral to pump

NA (10) shutoff/throttling valve provided on pump discharge piping

XIII. GROUNDWATER TREATMENT SYSTEM - GENERAL

(1) influent concentrations summary

NA (a) expected or calculated influent concentrations acceptable (based upon pumping test dynamic sample, weighted averaging procedure, or other reasonable assumptions)

NA (b) summary of the expected influent concentrations (ppb): benzene _____; toluene _____; ethylbenzene _____; xylenes _____; MTBE _____; naphthalene _____; EDB _____; 1,2-dichloroethane _____; others _____

(2) discharge to sewage treatment plant

NA (a) feasibility of discharge to sewage treatment plant evaluated

NA (b) consideration given to less time and/or level of treatment required to meet sewage system pretreatment standards

(3) site piping summary

NA (a) schematics of all treatment components, piping, valves, controls and appurtenances provided

NA (b) influent and effluent sampling ports provided

NA (c) piping type and size provided

(4) iron fouling

NA (a) groundwater analyses (ppm): total _____; dissolved _____

NA (b) consideration whether iron fouling should be controlled by filtration of influent to remove particulately-bound iron, and/or by removal or sequestering of dissolved iron to prevent precipitation in process equipment items (generally, "normal" concentration of dissolved iron in water is approx. 0.1 to 0.3 ppm, and unless the pH of the water falls below 5, it rarely exceeds 1 ppm)

NA (5) consideration whether pretreatment or other measures necessary to prevent fouling by calcium carbonate (Langelier Index calculation based on groundwater samples may aid in this consideration)

NA (6) need for pretreatment or O&M for biofouling considered

XIV. AIR STRIPPING TREATMENT PROCESS

(1) packed tower

NA (a) type, size, and surface area of packing

(b) calculations, criteria, design parameters

NA 1) tower height

NA 2) tower diameter

NA 3) packing height

NA 4) water flow rate

NA 5) air flow rate

NA 6) blower hp

NA 7) air/water ratio

NA 8) pressure drop across packing

NA (c) pressure gauge to indicate effects of fouling over time

NA (d) mist eliminator

NA (e) observation port

NA (f) O&M considerations (fouling potential)

(2) diffused aerator (tank type)

NA (a) calculations, parameters (tank volume; contact time; air flow rate; pressure drop; removal efficiency of chemicals of concern) and design assumptions

(3) low profile air stripper

NA (a) number of trays; water flow rate; air flow rate; air/water ratio; pressure drop; blower hp; mist eliminator

(4) general

NA (a) air emissions calculations; emissions stack height

NA (b) equipment description if emissions treatment necessary

NA (c) automated recovery well shutdown when blower failure occurs

NA (d) sampling of effluent, daily for first three days, monthly for next two months, quarterly thereafter

XV. LIQUID-PHASE CARBON ADSORPTION

NA (1) indication whether adsorption is for primary treatment of groundwater or polishing of effluent

NA (2) carbon specifications

NA (3) carbon unit(s) sizing calculations (carbon usage rate, contact time, pressure losses)/design assumptions

NA (4) isotherm data from pilot study needed if carbon adsorption used as primary treatment and total VOA concentrations are appreciable (VOA > 100 ppb typically) in order to estimate carbon capacity required and sampling frequency

NA (5) TOC in groundwater determined and effect on carbon usage considered

NA (6) need for sand filter or cartridge unit prior to carbon unit considered

NA (7) pressure gauge and pressure relief valve provided on carbon (and sand) filter

NA (8) carbon disposal and replacement method

NA (9) series configuration of carbon units considered to allow for maximum carbon utilization and prevention of contaminant breakthrough to system effluent

NA (10) automated recovery well shutdown if primary carbon unit pressure too high

NA (11) schedule for sampling between and after carbon adsorption units

XVI. IN SITU AIR SPARGING OF GROUNDWATER

(1) prerequisites

NA (a) no or little free product which could spread via sparge turbulence, or prolong sparging

NA (b) volatile (C_3-C_{10}) petroleum fractions with Henry's Constant ≥ 0.00001 atm$*$m^3/mol (approx. rule of thumb, unless biosparging is proposed)

NA (c) no high concentrations of metals (iron, magnesium) to form oxides which plug aquifer or well screens, or high concentrations of dissolved calcium, which could react with CO_2 in air to clog aquifer w/calcium carbonate (notes: Langelier Index calculation regarding equilibrium between calcium carbonate and dissolved CO_2 may be helpful. Generally, precipitation of dissolved iron is less likely when water is acidic, approx. pH less than 6)

(2) pilot study [per Rule 62-770.700(2), FAC] or rationale to forego pilot study

NA (a) three-stage pilot study recommended: vapor extraction only; sparging only; combined extraction and sparging

NA (b) pilot test components designed and located for cost-effective subsequent integration into full-scale design

NA (c) diagram of pilot layout indicating locations of air injection well, vapor extraction well, and radial distance of monitoring wells from the air injection well

NA (d) air flow rates for each stage (cfm): vapor extraction; sparging; combined

NA (e) radius of influence for each stage (ft): vapor extraction; sparging; combined

NA (f) groundwater mounding observed during each stage (inches): vapor extraction; sparging; combined

NA (g) measurement of parameters which are pertinent to full-scale design at various radial distances from the air injection well (for example: vacuum readings; pressure readings; water elevations; dissolved oxygen; pH; conductivity)

NA (h) measurement of vapor extraction system off-gas concentrations of chemicals of concern for the purpose of selecting and sizing cost-effective off-gas treatment for full-scale system

NA (i) determination of soil's permeability (should be greater than 10^{-9} sq cm for sparging to be feasible)

NA (j) need for plume control evaluated

(3) full-scale design

(a) groundwater contamination plume coverage

NA 1) location(s) and radius of influence for full-scale air injection well(s)

NA 2) adequate coverage by overlapping radii of influence if multiple well system

NA (b) air injection well(s): no. of wells; well design; operating air pressure at wellheads; cfm each well; total cfm _____

NA (c) avoidance of long screen allowing air to diffuse at top portion only, where air flow resistance is least (typ screen is 1 to 3 ft long)

NA (d) well depth and screened interval (or depth of sparge tip) appropriate w/respect to depth of contamination

(e) vapor extraction well(s) in conjunction w/sparging situated properly to recover volatiles and prevent their release to atmosphere

NA 1) injection cfm of air typically 20 to 80% of vapor extraction cfm (0.2 to 0.8)

NA 2) automatic shutdown of air injection upon loss of, or low, vapor extraction system vacuum, or failure of vacuum pump motor, in order to prevent air emissions

NA 3) adequate and cost-effective treatment of vapor extraction system off-gas proposed to prevent air emissions

(f) compressor

NA 1) design: cfm @ psig; operating cfm @ psig

NA 2) type; mfr; model; motor hp; rpm; performance curves; air filter at compressor inlet; oil trap or oil-free compressor to avoid introducing more contamination to aquifer

NA (g) safety: pressure relief valve at discharge of compressor and/or high pressure switch for automatic shutdown

NA (h) instrumentation and gauges: pressure indicating gauges at each sparging well

NA (i) air flow control: shutoff/throttling valve at each well; other flow control device or method

XVII. IN SITU/ENHANCED BIORECLAMATION

NA (1) pilot study [per Rule 62-770.700(2), FAC]

NA (2) groundwater parameters (pH, DO, TDS, N, P, Temp, TOC, Alk, etc.) evaluated

NA (3) monitoring program discussion. TOC to be monitored

NA (4) additional oxygen source provision

NA (5) oxygen and nutrients method of application and application rate to contaminated area evaluated

NA (6) suitable soil present (non-clayey, good transport, low adsorption properties)

XVIII. LEAD REMOVAL

NA (1) discussion of area(s) where groundwater lead concentration exceeds 15 ppb

NA (2) lead concentrations (ppb): unfiltered (____); filtered (____); background (____)

NA (3) proposal for lead removal by filtration if unfiltered sample is greater than 15 ppb and filtered sample is less than 15 ppb

NA (4) method of lead removal, including pertinent design calculations

XIX. INFILTRATION GALLERY

NA (1) field percolation test (preferably with double-ring infiltrometer) provided if gallery base is located in vadose zone

NA (2) infiltration gallery construction details and location (upgradient location if site layout allows)

NA (3) gallery calculations/assumptions with mounding analysis

NA (4) piezometer and cleanout pipe in gallery

NA (5) geotextile filter fabric to be installed around and above gallery

NA (6) discussion or modeling of gallery's effect on plume migration

XX. INJECTION WELL

NA (1) discussion of injection zone and relevant lithology information

NA (2) injection well location and proposed construction details

NA (3) screened interval appropriate

NA (4) effluent discharge pump description, pump characteristic curve, and design flow rate (____ gpm at ____ ft TDH)

NA (5) carbon polishing unit (or equivalent)

NA (6) air release valve at highest point of effluent discharge piping

NA (7) injection rate (well hydraulics) calculations

NA (8) Underground Injection Control (UIC) permit conditions met

NA (9) evaluation of injection well's effect on potable wells and plume migration

XXI. ALTERNATIVE EFFLUENT DISPOSAL METHODS

NA (1) cost-effectiveness comparison of alternatives (including general permit fee of $2,500 per year in the cost estimate for NPDES disposal, if it is one of the alternatives being compared)

(2) for surface water discharge

NA (a) conditions for NPDES general permit met

NA (b) indication that notice of intent for NPDES permit will be submitted after RAP approval

NA (3) if applicable, consumptive use permit obtained from Water Management District

NA (4) approval from municipality for sewer discharge, and conditions and effluent standards to be met

NA (5) applicable permits for stormwater discharge

XXII. SAMPLING REQUIREMENTS

NA (1) designated monitoring wells and their sampling frequency [per Rule 62-770.700, FAC]
highest concentrations _____; downgradient _____

NA (2) monthly sampling of influent from recovery well(s) for first six months, quarterly thereafter

NA (3) sampling of system effluent, daily for first three days, monthly for next two months, quarterly thereafter

NA (4) filing of annual status reports acknowledgment

NA (5) water-table contours and depth and extent of free product to be determined at monthly or quarterly sampling event

NA (6) sampling program includes appropriate chemicals of concern/procedures as specified in Rule 62-770.700, FAC

NA (7) periodic maintenance and site inspection limited to twice a month for first quarter and monthly thereafter, or justification for alternative frequency provided

XXIII. CHEMICAL OXIDATION

(1) general

NA (a) indication of media to be remediated: groundwater; soil

NA (b) application: in situ or ex situ

(2) design and technical considerations

NA (a) process description, including diagrams, sketches, schematics, or flowsheets as necessary to illustrate

NA (b) identification of all chemicals involved (e.g.: hydrogen peroxide; ozone; catalysts, including a breakdown of individual catalyst ingredients; etc.)

NA (c) identification of the specific petroleum hydrocarbons to be oxidized

NA (d) mass of the hydrocarbons to be oxidized

NA (e) stoichiometry of the chemical reactions involved (or at least an indication of the amount or reactants required per pound of hydrocarbon degraded): the theoretical amount vs. the actual amount to be used in the field

NA (f) description of any sidestreams, wastes, spent catalysts, effluents, air emissions, or residues remaining in the treated groundwater or soil, and the nature, volume and fate or disposition of these substances

NA (g) design parameters (e.g.: permeability; radius of influence; etc.)

NA (h) operational parameters (e.g.: flow rates; temperatures; pressures; pH; residence times; concentrations; total dissolved solids; etc.)

NA (i) list of sampling parameters to include in the analysis of groundwater and/or soil during active remediation and post remediation monitoring periods, to track both the progress of the cleanup of chemicals of concern and the fate of any chemicals unique to the process

NA (j) pilot study [per Rule 62-770.700(2), FAC]

(3) environmental and regulatory considerations (applicable items may include, but are not necessarily limited to, those listed below)

NA (a) air emissions (Rule 62-770.700, FAC, applies)

NA (b) identification of any special permits that may be needed

(c) for in situ, injection type aquifer remediation processes via Class V, Group 4 aquifer remediation wells, Chapter 62-528, FAC, applies for underground injection

NA 1) disclosure of complete chemical analysis of injected fluid required by law (no exceptions)

NA 2) injected fluid must meet primary and secondary drinking water standards of Chapter 62-550, FAC

NA 3) monitoring of appropriate injected fluid constituents required

NA 4) background water quality samples, especially for parameters common to the injected fluid and the background

NA 5) injection conducted in such a way that unwanted migration of both injected fluid and petroleum chemicals of concern is avoided

NA 6) appropriate underground injection control inventory and design information included in Remedial Action Plan [requirements for inventory and design information are indicated in guidance memorandum "Proposed Injection Well(s) for In Situ Aquifer Remediation at a Petroleum Remedial Action Site"]

(4) safety (applicable items may include, but are not necessarily limited to, those listed below)

NA (a) material safety data sheets, toxicity, or other information pertinent to the chemicals and catalysts involved

NA (b) safe handling of chemicals: avoidance of mixing, premature mixing, or improper storage of incompatible chemicals

(c) fire and explosion safety and prevention considerations

NA 1) Lower Explosive Level (LEL) considerations

NA 2) potential for vapor migration, either passively or by convection, or driven by air or other gases used, or generated by the heat of exothermic chemical reactions or the vaporization of free product by such heat

NA 3) the minimum tolerable distance between underground storage tanks and product piping and any in situ heat-generating process

NA 4) observance of National Electrical Code (typically Series 500 articles for Class I, Group D, Division 1 or 2 hazardous area requirements)

NA 5) appropriate chemical-resistant and/or spark-resistant materials of construction for equipment items

NA 6) safety devices (e.g.: pressure relief valves; rupture disks; flame arrestors; etc.)

NA 7) safe shutdown of systems in the event of power failure or unsafe operating conditions

NA 8) personal protection of workers

NA 9) safety considerations regarding adjacent neighbors and passersby

COST ESTIMATE

REMEDIAL ACTION PLAN
BUILDING 460, NAVSTA MAYPORT

COST ESTIMATE: SOIL VAPOR EXTRACTION AND NATURAL ATTENUATION

SCOPE:

Vapor enhanced extraction of contaminated soil
Provide necessary sampling, monitoring, and reporting requirements for SVE system monitoring
Provide necessary sampling, monitoring, and reporting requirements for groundwater monitoring

ESTIMATOR: ECA
CHECKED BY:

COST SUMMARY TABLE

	QUANTITY	UNIT	UNIT PRICE	TOTAL
DIRECT COST:				
Site preparation and mob/demob				$10,490
Vapor extraction system				$33,299
Miscellaneous piping and equipment				$200
Confirmatory Sampling				$528
Vapor phase GAC				$1,300
TOTAL DIRECT COSTS:				$45,817
INDIRECT COST:				
Health and safety			5%	$2,291
Legal, admin, permitting			5%	$2,291
Engineering			10%	$4,582
Services during construction			10%	$4,582
Direct cost contingency			20%	$9,163
TOTAL INDIRECT COSTS:				$13,745
TOTAL CAPITAL (DIRECT + INDIRECT):				$59,562
ANNUAL OPERATING, MAINTENANCE, AND MONITORING COST:				
Annual Operating, Maintenance, and Monitoring Costs (Year 1)				$48,322
Annual Operating, Maintenance, and Monitoring Costs (Years 2-5) Present Worth				$21,894
TOTAL OPERATING, MAINTENANCE, AND MONITORING COST YEARS 1 - 5:				$70,216
TOTAL COST YEAR 1:				$107,884
TOTAL COST YEARS 2 THROUGH 5:				$21,894
TOTAL COST YEARS 1 THROUGH 5:				**$129,779**

DIRECT COSTS

SITE PREPARATION MOB/DEMOB

	QUANTITY	UNIT	UNIT PRICE	TOTAL
UTILITY HOOKUP	1	ls	$3,000.00	$3,000
LABOR:				
Engineer	8	hour	$110.00	$880
Health and Safety Officer	8	hour	$110.00	$880
Laborers to install fencing, signs, etc., 2 @ 2 days	32	hour	$40.00	$1,280
TEMPORARY FENCING				
SUPPLIES:				
Signs	3	ea	$50.00	$150
Survey flags for utilities location	1	pkg	$50.00	$50
Temporary decon pad	1	ls	$250.00	$250
MOB/DEMOB:	2	ea	$2,000.00	$4,000
Total site preparation and mob/demob:				$10,490
VAPOR EXTRACTION SYSTEM				
Installation Labor: System				
Design Engineer, construction oversight, 1 weeks, 20 hrs	20	hr	$110.00	$2,200
Health and Safety Officer, 1 weeks, 40 hours	40	hr	$110.00	$4,400
Laborers, 2 @ 1 weeks, 40 hrs	80	hr	$40.00	$3,200
Installation of Vapor Extraction Trench				
80 feet, 6" slotted (0.02) PVC	80	ft	$20.00	$1,600
20 feet, 6" solid PVC	20	ft	$10.00	$200
Clean fill, pea gravel	20	cy	$20.00	$400
Asphalt repair	1	ls	$250.00	$250
Air Vents/Vapor Observation Probes:				
2-inch PVC, screened in vadose zone, approx. 5' bls, hand installed	4	ea	$50.00	$200
Asphalt coring	4	ls	$135.00	$540
90° PVC elbows, 2 each vent to prevent infiltration, caps	8	ea	$15.00	$120
Excavated Soil				
Analysis (7-day TAT, 10% markup)				
TCLP Sampling for landfill disposal:lead, Method 3050/6010	1	ea	$85.00	$85
TCLP Sampling for landfill disposal:volatiles, Method 8240	1	ea	$143.00	$143
Landfill tipping fee: (estimated cost for Trail Ridge Landfill, Jacksonville, FL)	8	tons	$40.00	$320
Transport, rental fee for staging onsite, awaiting TCLP analysis (1 roll-off, 12 days	12	day	$8.00	$96
Blower, Rotron Model EN808, regenerative blower				
and moisture separator, 40-gal, high level switch, vac. Relief filter, in line filter	1	ea	$3,990.00	$3,990

VAPOR EXTRACTION SYSTEM COSTS, cont.	QUANTITY	UNIT	UNIT PRICE	TOTAL
Control Panel	1	ea	$1,950.00	$1,950
Options:				
Temperature Gauge	1	ea	$58.00	$58
Flow meter	2	ea	$308.00	$616
vacuum gauge	2	ea	$38.00	$76
vacuum switch	2	ea	$95.00	$190
temp switch	1	ea	$595.00	$595
hour meter	1	ea	$175.00	$175
Building Enclosure	1	ea	$3,995.00	$3,995
Power Usage, assumed	12	mos	$100.00	$1,200
Holding Tank for wtr from moisture separator, 200 gal PE tank	1	ea	$200.00	$200
analysis for discharge, assume discharge 6 times	6	ea	$250.00	$1,500
Dismantling at end of yr	1	ls	$5,000.00	$5,000
Total Vapor Extraction System Costs:				$33,299
MISCELLANEOUS PIPING, VALVES, AND EQUIPMENT	1	ls	$200.00	$200
CONFIRMATORY SAMPLING				
TRPH (Fl-Pro)	2	ea	$72.00	$144
PAHs (USEPA Method 8310)	2	ea	$102.00	$204
SPLP (USEPA Method 1312)	2	ea	$90.00	$180
Total Confirmatory Sampling Costs:				$528
VAPOR PHASE CARBON				
55-gallon canisters coconut shell carbon, 250 lbs carbon ea.				
(Assume 2 55-gallon drums sufficient for 30 days, treatment unnecessary after 30 days)	2	ea	$450.00	$900
Disposal: assume transport to Gainesville, FL for disposal, disposal fee	2	ea	$100.00	$200
Transport	1	ls	$200.00	$200
Total Vapor Phase Carbon Costs:				$1,300

ANNUAL OPERATING, MAINTENANCE, AND MONITORING COSTS

SYSTEM AND NATURAL ATTENUATION MONITORING (YEAR 1)

	QUANTITY	UNIT	UNIT PRICE	TOTAL
SYSTEM MONITORING, operating parameter, flow, pressure, etc.				
Labor: (1 technicians, 52 weeks, 4 hours per visit)	208	hour	$60.00	$12,480
REPORTING: Status Report, annual				
1 mid-level engineer, 3 days per event	32	hour	$60.00	$1,920
1 senior engineer, 1 day per event	8	hour	$110	$880
Production:				
clerical, 16 hours per report	16	hour	$45	$720
CADD operator, 4 dwgs per rpt @ 6 hours per dwg	24	hour	$60	$1,440
reproducing, binding: 25 pgs @ 10 copies	250	pages	$0.10	$25
shipping: 10 reports	10	ls	$15	$150
EMISSIONS MONITORING (weekly 1 mo/monthly 2 mos,qtrly 3 qtrs, 4 hrs/event	36	hr	$60.00	$2,160
Analysis: influent and effluent, EPA Method 18, 9 events	9	ea	$150.00	$1,350
NATURAL ATTENUATION MONITORING, GROUNDWATER				
LABOR: (2 technicians 1 day per quarter @ 10 hour days)	80	hour	$60.00	$4,800
PER DIEM: (2 technicians 1 day per quarter)	8	day	$35.00	$280
CAR RENTAL (w/ gas): (1 day per quarter)	4	ls	$60.00	$240
ANALYSIS:				
Groundwater COCs (MTBE):				
Volatile Organics EPA Method 602 (2 samples Quarterly, Year 1)	8	ea	$70.00	$560
Natural Attenuation Analysis (Quarterly, Year 1)				
Field: Test kits: Carbon Dioxide	1	ls	$26.00	$26
Alkalinity	1	ls	$32.00	$32
Titration equip. for above kits, purchase at start of monitoring	1	ls	$100.00	$100
DR 850 Colorimeter for Fe, NO_3, SO_4, O_2, purchase at start of monitoring	1	ls	$650.00	$650
Test kit reagents, Fe, NO_3, SO_4, O_2	1	ls	$100.00	$100
Lab: Methane Method RSK 175, 5 samples ea qtr	20	ea	$70.00	$1,400
EXPENDIBLES:				
Gloves (1 box per quarter)	4	box	$9	$36
Teflon tubing (100 feet per quarter)	400	ft	$1.45	$580
Silicon tubing (15 feet per quarter)	60	ft	$1.55	$93
Shipping and supplies (tape, bubble wrap, ice)	4	ls	$100	$400
REPORTING:				
1 mid-level engineer, 3 days per event @4 events	96	hour	$60.00	$5,760
1 senior engineer, 8 hours per event @ 4 events	32	hour	$110	$3,520
Production:				
clerical, 12 hours per report, quarterly rpts	48	hour	$45	$2,160
CADD operator, 4 dwgs per rpt @ 6 hours per dwg, quarterly rpts	96	hour	$60	$5,760
reproducing, binding: 25 pgs @ 10 copies, quarterly rpts	1000	pages	$0.10	$100
shipping: 10 reports, quarterly	40	reports	$15	$600
Total Operation, Maintenance, and Monitoring Costs (Year 1):				$48,322

ANNUAL OPERATING, MAINTENANCE, AND MONITORING COSTS (YEARS 2-5):
NATURAL ATTENUATION, GROUNDWATER, ONLY
Note:
The concentration of the COC in groundwater (MTBE) only slightly exceeds its respective GCTL, and therefore it is likely that within the first year of monitoring, two consecutive sampling events will shown detections of the COC at a concentration below its GCTL, at which time monitoring is considered complete (Chapter 62-770.690 (7)(b) FAC). However, in order to be conservative when estimating cost, it was assumed that annual groundwater monitoring will be conducted for 4 years after quarterly monitoring is complete.

	QUANTITY	UNIT	UNIT PRICE	TOTAL
LABOR: (2 technicians 1 day @ 10 hour days)	20	hour	$60.00	$1,200
PER DIEM: (2 technicians, 1 day)	2	day	$35.00	$70
CAR RENTAL (w/ gas):	1	ls	$60.00	$60
ANALYSIS:				
Groundwater COCs (MTBE):				
Volatile Organics EPA Method 602 (2 samples)	2	ea	$70.00	$140
Natural Attenuation Analysis				
Field: Test kits: Carbon Dioxide	1	ls	$26.00	$26
Alkalinity	1	ls	$32.00	$32
Test kit reagents, Fe, NO_3, SO_4, O_2	1	ls	$100.00	$100
Labora Methane Method RSK 175, 5 samples	5	ea	$70.00	$350
EXPENDIBLES:				
Gloves	1	box	$9	$9
Teflon tubing	100	ft	$1.45	$145
Silicon tubing	15	ft	$1.55	$23
Shipping and supplies (tape, bubble wrap, ice)	1	ls	$100	$100
REPORTING:				
1 mid-level engineer, 3 days per event	24	hour	$60.00	$1,440
1 senior engineer, 1 day per event	8	hour	$110	$880
Production:				
clerical, 16 hours per report	16	hour	$45	$720
CADD operator, 4 dwgs per rpt @ 6 hours per dwg	24	hour	$60	$1,440
reproducing, binding: 25 pgs @ 10 copies	250	pages	$0.10	$25
shipping: 10 reports	10	ls	$15	$150
Total **ANNUAL** Operation, Maintenance, and Monitoring Costs (Years 2 through 5):				$6,910
Total **CUMULATIVE** Operation, Maintenance, and Monitoring Costs (Years 2 through 5):				$27,641
PRESENT WORTH (i = 6%) $27,641(0.7921)				$21,894

* Analytical prices are contract rates for HLA. Prices may vary.

REMEDIAL ACTION PLAN
BUILDING 1587, NAVSTA MAYPORT

COST ESTIMATE: SOURCE REMOVAL AND NATURAL ATTENUATION

SCOPE:

Source removal via excavation, transport, and disposal of 40 tons of contaminated soil
Provide necessary sampling, monitoring, and reporting requirements for groundwater monitoring

ESTIMATOR: ECA
CHECKED BY:

COST SUMMARY TABLE

	QUANTITY	UNIT	UNIT PRICE	TOTAL
DIRECT COST:				
Site preparation and mob/demob				$3,010
Excavation, transport, disposal, and site restoration				$14,487
TOTAL DIRECT COSTS:				$17,497
INDIRECT COST:				
Health and safety			5%	$875
Legal, admin, permitting			5%	$875
Engineering			10%	$1,750
Services during construction			10%	$1,750
Direct Cost Contingency			20%	$3,499
TOTAL INDIRECT COSTS:				$8,749
TOTAL CAPITAL (DIRECT + INDIRECT):				$26,246
ANNUAL OPERATING, MAINTENANCE, AND MONITORING COST:				
Annual Operating, Maintenance, and Monitoring Costs (Year 1)				$27,197
Annual Operating, Maintenance, and Monitoring Costs (Years 2-5) Present Worth				$21,894
TOTAL OPERATING, MAINTENANCE, AND MONITORING COST YEARS 1 - 5:				$49,091
TOTAL COST YEAR 1:				$53,443
TOTAL COST YEARS 2 THROUGH 5:				$21,894
TOTAL COST YEARS 1 THROUGH 5:				**$75,337**

DIRECT COSTS

SITE PREPARATION MOB/DEMOB

	QUANTITY	UNIT	UNIT PRICE	TOTAL
LABOR:				
Design engineer to conduct procurement for mob/demob	16	hour	$110.00	$1,760
SUPPLIES:				
Silt fencing	80	ft	$5.00	$400
Signs	3	ea	$50.00	$150
Pressure Washer	3	day	$50.00	$150
Survey flags for utilities location	1	pkg	$50.00	$50
Temporary decon pad	1	ls	$250.00	$250
EQUIPMENT MOB/DEMOB:				
Backhoe	1	ea	$250.00	$250
Total site preparation and mob/demob:				$3,010

EXCAVATION, TRANSPORT, DISPOSAL, AND SITE RESTORATION

	QUANTITY	UNIT	UNIT PRICE	TOTAL
EXCAVATION:				
Labor (backhoe operator):	24	hours	$40.00	$960
Backhoe rental:	3	day	$520.00	$1,560
TRANSPORT: two 20 yd^3 roll-offs	2	ea	$225.00	$450
Rental fee for staging onsite, awaiting TCLP analyses of soil (2 roll-offs, 12 days)	24	day	$8.00	$192
DISPOSAL:				
Landfill tipping fee: (estimated cost for Trail Ridge Landfill, Jacksonville, FL)	40	ton	$40.00	$1,600
SITE RESTORATION:				
Backfill, local source:	29	yd^3	$10.00	$290
Sod, and delivery	100	ft^2	$1.00	$100
SAMPLING:				
Laboratory analyses of perimeter soil samples				
TRPH (FL-Pro)	4	ea	$72.00	$288
PAHs (USEPA Method 8310)	4	ea	$102.00	$408
SPLP (USEPA Method 1312)	4	ea	$90.00	$360
Laboratory analyses of soil to be disposed (7-Day turn-around-time, 10% markup)				
TCLP Sampling for landfill disposal: Lead, Method 3050/6010	1	ea	$85.00	$85
TCLP Sampling for landfill disposal: Volatiles, Method 8240	1	ea	$143.00	$143
LABOR:				
Health and Safety Officer during excavation/backfilling & mob/demob	40	hour	$110.00	$4,400
Field engineer to conduct field sampling and construction oversight	40	hour	$60.00	$2,400
MISCELLANEOUS:				
Car rental (w/ gas)	5	day	$60.00	$300
Hotel (2 persons @ 4 nights, 1 person @ 1 night)	9	night	$59.00	$531
Per Diem (2 persons @ 5 days, 1 person @ 2 days)	12	ls	$35.00	$420
Total Excavation, Disposal, and Site Restoration Costs:				$14,487

ANNUAL OPERATING, MAINTENANCE, AND MONITORING COSTS

NATURAL ATTENUATION MONITORING (YEAR 1)

	QUANTITY	UNIT	UNIT PRICE	TOTAL
LABOR: (2 technicians 1 day per quarter @ 10 hour days)	80	hour	$60.00	$4,800
PER DIEM: (2 technicians 1 day per quarter)	8	day	$35.00	$280
CAR RENTAL (w/ gas): (1 day per quarter)	4	ls	$60.00	$240
ANALYSIS:				
Groundwater COCs (benzene):				
Volatile Organics EPA Method 602 (2 samples Quarterly, Year 1)	8	ea	$70.00	$560
Natural Attenuation Analysis (Quarterly, Year 1)				
Field: Test kits: Carbon Dioxide	1	ls	$26.00	$26
Alkalinity	1	ls	$32.00	$32
Titration equip. for above kits, purchase at start of monitoring	1	ls	$100.00	$100
DR 850 Colorimeter for Fe, NO_3, SO_4, O_2, purchase at start of monitoring	1	ls	$650.00	$650
Test kit reagents, Fe, NO_3, SO_4, O_2	1	ls	$100.00	$100
Labora Methane Method RSK 175, 5 samples ea qtr	20	ea	$70.00	$1,4
EXPENDIBLES:				
Gloves (1 box per quarter)	4	box	$9	$36
Teflon tubing (100 feet per quarter)	400	ft	$1.45	$580
Silicon tubing (15 feet per quarter)	60	ft	$1.55	$93
Shipping and supplies (tape, bubble wrap, ice)	4	ls	$100	$400
REPORTING:				
1 mid-level engineer, 3 days per event @4 events	96	hour	$60.00	$5,760
1 senior engineer, 8 hours per event @ 4 events	32	hour	$110	$3,520
Production:				
clerical, 12 hours per report, quarterly rpts	48	hour	$45	$2,160
CADD operator, 4 dwgs per rpt @ 6 hours per dwg, quarterly rpts	96	hour	$60	$5,760
reproducing, binding: 25 pgs @ 10 copies, quarterly rpts	1000	pages	$0.10	$100
shipping: 10 reports, quarterly	40	reports	$15	$600
Total Operation, Maintenance, and Monitoring Costs (Year 1):				$27,197

ANNUAL OPERATING, MAINTENANCE, AND MONITORING COSTS (YEARS 2-5):

Note:
The concentration of the COC in groundwater (benzene) only slightly exceeds its respective GCTL, and therefore it is likely that within the first year of monitoring, two consecutive sampling events will shown detections of the COC at a concentration below its GCTL, at which time monitoring is considered complete (Chapter 62-770.690 (7)(b) FAC). However, in order to be conservative when estimating cost, it was assumed that annual groundwater monitoring will be conducted for 4 years after quarterly monitoring is complete.

	QUANTITY	UNIT	UNIT PRICE	TOTAL
LABOR: (2 technicians 1 day @ 10 hour days)	20	hour	$60.00	$1,200
PER DIEM: (2 technicians, 1 day)	2	day	$35.00	$70
CAR RENTAL (w/ gas):	1	ls	$60.00	$60
ANALYSIS:				
Groundwater COCs (benzene):				
Volatile Organics EPA Method 602 (2 samples)	2	ea	$70.00	$140
Natural Attenuation Analysis				
Field: Test kits: Carbon Dioxide	1	ls	$26.00	$26
Alkalinity	1	ls	$32.00	$32
Test kit reagents, Fe, NO_3, SO_4, O_2	1	ls	$100.00	$100
Labora Methane Method RSK 175, 5 samples	5	ea	$70.00	$350
EXPENDIBLES:				
Gloves	1	box	$9	$9
Teflon tubing	100	ft	$1.45	$145
Silicon tubing	15	ft	$1.55	$23
Shipping and supplies (tape, bubble wrap, ice)	1	ls	$100	$100
REPORTING:				
1 mid-level engineer, 3 days per event	24	hour	$60.00	$1,440
1 senior engineer, 1 day per event	8	hour	$110	$880
Production:				
clerical, 16 hours per report	16	hour	$45	$720
CADD operator, 4 dwgs per rpt @ 6 hours per dwg	24	hour	$60	$1,440
reproducing, binding: 25 pgs @ 10 copies	250	pages	$0.10	$25
shipping: 10 reports	10	ls	$15	$150
Total **ANNUAL** Operation, Maintenance, and Monitoring Costs (Years 2 through 5):				$6,910
Total **CUMULATIVE** Operation, Maintenance, and Monitoring Costs (Years 2 through 5):				$27,641
Present Worth (i = 6%) $27,641 (0.7921)				$21,894

* Analytical prices are contract rates for HLA. Prices may vary.