N40003.AR.002571
PUERTO RICO NS
5090.3a

ENGINEERING REPORT APPENDIX STUDY FOR ELIMINATION OF POLLUTANT DISCHARGE ELIMINATION SYSTEM VIOLATIONS NAVAL ACTIVITY PUERTO RICO
1/13/1989
HAYES, SEAY, MATTERN AND MATTERN, INC

Hayes,
Seay,
Mattern &
Mattern, Inc.

ARCHITECTS
ENGINEERS
PLANNERS

ENGINEERING REPORT APPENDIX

Study for Elimination of NPDES Violations at the U.S. Naval Station

ROOSEVELT ROADS, PUERTO RICO

ATLANTIC DIVISION

NAVAL FACILITIES
ENGINEERING COMMAND

ENGINEERING REPORT APPENDIX

STUDY FOR ELIMINATION OF NATIONAL POLLUTANT DISCHARGE ELIMINATION SYSTEM (NPDES) VIOLATIONS AT THE U.S. NAVAL STATION

ROOSEVELT ROADS, PUERTO RICO

CONTRACT N62470-87-C-9009

JANUARY 13, 1989

DEPARTMENT OF THE NAVY
ATLANTIC DIVISION
NAVAL FACILITIES ENGINEERING COMMAND

HAYES, SEAY, MATTERN AND MATTERN, INC.
ARCHITECTS-ENGINEERS-PLANNERS
ROANOKE, VIRGINIA
COMMISSION NO. 1735A

APPENDIX 1

Summary of Conference, 6 June 1988

Summary of Conference, 8 June 1988

Summary of Telephone Conference, 8 June 1988

Summary of Conference, 13 June 1988

Summary of Conference, 14 June 1988

Summary of Site Visits to Wastewater Treatment Plants, 6-16 June 1988

Summary of Conference, 1 December 1988

Summary of Conference, 1 December 1988

Summary of Conference, 2 December 1988

SUMMARY OF CONFERENCE
STUDY FOR ELIMINATION OF NPDES VIOLATIONS
ROOSEVELT ROADS, PUERTO RICO
CONTRACT NO. N62470-87-C-9009
A&E COMMISSION NO. 1735A
6 JUNE 1988

LOCATION: Office of Public Works
Roosevelt Roads, Puerto Rico

PRESENT FOR: Public Works Department

Felix Mestey, Director Environmental Engineering Division
Wilfredro Rivera, Environmental Technical Engineer
José Lopez, Director Technical Management Division
José Ruiz, Planning Branch Manager

Hayes, Seay, Mattern and Mattern, Inc. (HSMM)

Robert Canova
Randal Owen

The following items of discussion, agreement, and direction took place concerning collection of data for the referenced project:

1. Planning provided HSMM with scope of work for all planned Special Projects for the three sewerage systems, a base map, and a current Building Utilization Report for the station.

2. Environmental provided HSMM with Monthly Report forms (File S-2A) for the three wastewater plants for May 1987 to April 1988. Environmental provided HSMM with copy of the three wastewater plant draft O&M Manuals, Sections 1, 2 and Appendix III and IV. Environmental will provide copy of the Manatee Report.

3. Technical Management (Engineering) provided HSMM with construction drawings for the three wastewater plants and a sewer map of the station.

4. Technical Management requested that HSMM Contract with LANTDIV include preparation of Special Project descriptions for waterwater plant improvements and that the individual projects be developed with $200,000 maximum construction costs. HSMM and Environmental will discuss this request with LANTDIV.

5. Planning provided HSMM with the list of Potential Industrial Wastewater Sources, attached.

6. HSMM will tabulate influent and effluent analysis data for the three wastewater plants from Environmental File G-6.

7. HSMM will check NPDES Report Forms already on file and request Environmental to provide Forms from May 1987 to April 1988 which are not already on file (File G-7).

POTENTIAL INDUSTRIAL WASTEWATER SOURCES
U.S. NAVAL STATION
ROOSEVELT ROADS, PUERTO, RICO
6 JUNE 1988

BUNDY AREA

FAC. NO.	ACTIVITY	COMMENT
729, 730, 1211, 630	Cafeteria & Snack Shops	
594, 595	Dental Clinic	
515, 745	Auto Repair Shops	
1686	Laundry & Dry Cleaning	
1935-2000 Area	Horse Stables	Not Sewered
1211	Golf Course Maintenance	

CAPEHART AREA

296	Radio & TV Stations
386, 1817	Communication Stations
Elementary School	Cafeteria
High School	Cafeteria
1660	Snack Shop

INDUSTRIAL AREA, AIRFIELD AREA

1796, McDonald's, 206	Snack Shop	
1970	Commissary Butcher Shop	
1808	Dining Hall	
422	Liquid O_2 & N_2 Generation	
201	Auto Hobby Shop	
860, 1734, 1980, 200	Aircraft Shop	1980 & 1734 Not Sewered
2046, 827	Fire Dept. & Training	
380	Missile Test & Assembly	

FAC. NO.	ACTIVITY	COMMENT
2245, 378	Torpedo Shop	Can Sample at 380
1930-791	Aircraft Shop	Can Sample at 380
429, 430	Buried Fuel Tanks	Not Sewered
431	Fueling Area	Not Sewered
	INDUSTRIAL AREA, FUEL AREA	
1715	Snack Shop	
Fuel Pier	Fuel Spill Collection	
192	Fuel Test Lab	
1760	Waste Oil Collection	Not Sewered
466, 1940	Fuel Pumps	
381, 382, 1084, 1086, 82, 83, 84, 85, 1080, 1082, 1088, 470, 471, 56A, 56B, 212, 213, 214, 215, 216, 217	Buried Fuel Tanks	Not Sewered. Sewer Passes Near 1080, 84, 82, 85
2009, 2010	Hazardous Waste Storage	2009 Not Sewered
278	Fuel Drum Storage	Not Sewered
	INDUSTRIAL AREA, PIER AREA	
976, 896	Fuel Valve Pits	
1795, 2024, 374	Snack Shop	
1790	Hospital	
1810, 31	Maintenance	
Fuel-Berthing Pier	Ship Waste Holding Tank Discharge	

FAC. NO.	ACTIVITY	COMMENT
1816	Sewage Transfer Hose Storage	
27, 250, 249 480, 479, 38	Hazardous Waste Storage	Not Sewered Except 27, 479
2034	~~Pest~~ Control	
2234	Standby Generator	
29-281	Diving Service	
NMCP Camp	Dining Facility	
1684	Dining Facility	
394 - 1730	Torpedo Shop	Not Sewered
1787	Vetinary Clinic	
1788	Refrigeration Shop	

PROJECT REQUEST

NAVFAC P-1014/64 (11-68)

STEP TWO SUBMISSION

ACTIVITY CODE NO.	ACTIVITY NAME AND LOCATION	DATE SUBMITTED
6029-665	U.S. NAVAL STATION, ROOSEVELT ROADS, PR	APR 87

PROJECT NO.	TITLE
RC16-85	REPAIR/ALTER INDUSTRIAL AREA SEWAGE TREATMENT PLANT (STP)

TYPE

a. [X] MAINT./REPAIR b. [X] MINOR CONSTRUCTION/ ALTERATION c. [ ] AIR CONDITIONING [ ] EQUIPMENT INSTALLATION

DESCRIBE AND STATE FUNCTION OF FACILITY

The facility is the Industrial Area Sewage Treatment Plant with a capacity of one million gallons per day and consisting of an aerated lagoon, sludge drying tanks, primary, and final settling tanks, trickling filters, chlorinator room, lift station and related appurtenances.

a. PROPERTY RECORD CARD NO. 2-02531

b. NAVY CATEGORY CODE 831-10

c. BLDG. OR STRUCTURE NO. 1758

WHAT IS THE EFFECT OF THIS PROJECT ON THE MISSION OF THE ACTIVITY?

This Station maintains and operates facilities and provides services and materials to support operations of aviation activities and units of the operating forces of the Navy and other activities and units. The existing deteriorated condition of several elements of the Industr rea STP will result in violations of the effluent limitations contained in the National ollutant Discharge Elimination System (NPDES) permit which are subject to high fines and/or legal actions against U.S. Naval Station, Roosevelt Roads.

THE REQUIREMENT FOR THE FACILITY IS BASED ON:

[ ] a. A CHANGE IN MISSION [X] b. FULL-TIME CONTINUING NEED [ ] c. 3 TO 5 YEAR NEED [ ] d. LESS THAN 3 YEARS' NEED [ ] e. CURRENTLY REQUIRED LESS THAN 50% OF TIME [ ] f. RESERVED FOR FUTURE REQUIREMENTS

a. EST. FUNDS COST	b. EST. PROJECT COST	c. EST. PLANNING COST	d. TOTAL FUNDS REQUESTED	e. EST. FACIL. REPL. COST
$ R=$~~262,000~~ C=$ ~~67,800~~ 349,800	$ 370,600	$ 20,800	$ ~~370,600~~ 367,100	$ 4,434,000

DATE FACILITY CONSTRUCTED	8. IS FACILITY ON AN APPROVED BASIC FACILITY REQUIREMENTS LIST? If "NO," how was need determined?
1972	[X] YES [ ] NO

PROJECT LISTED ON ANNUAL INSPECTION SUMMARY? If answer is "NO," and AIS is applicable, explain exclusion.

[X] YES [ ] NO [ ] N.A. "Non-deferrable"

DESCRIBE CONDITION TO BE CORRECTED, OR PROBLEM TO BE SOLVED WITH PROPOSED SOLUTION. Attach additional description if necessary. ONE PAGE ONLY.

The Industrial Area STP components are currently deteriorated and/or malfunctioning causing requent failures to the waste water treatment system. It also lacks several elements for th efficient operation of the plant, i.e. Storm Sewer System, stairs to the aerator tank, pre-chlorinating facilities at the lagoon and an overflow discharge to the comminutor. Parts of he sludge return pump, trickling filters, and scrappers need to be replaced. Also, other ne construction items and repairs are in urgent need in order to... (See continuation sheet)

WHY IS THIS PROPOSED SOLUTION BEST – AND WHAT ALTERNATIVES WERE CONSIDERED?

There is no other feasible alternative

ARE ANY NON-NAVY EXPERTS INVITED TO REVIEW THIS PROBLEM AND THIS SOLUTION? Explain. Start on solution.

a. [ ] YES b. [X] NO

14. HAS EFD DESIGN DIVISION REVIEWED SOLUTION? a. [X] YES b. [ ] NO

15. CAN ANOTHER FACILITY BE ECONOMICALLY ADAPTED FOR THIS FUNCTION? a. [ ] YES b. [X] NO

16. CAN PROJECT BE FUNDED IN PHASES? How? How many?

a. [ ] YES b. [X] NO

17. THIS PROJECT IS THE RESULT OF

a. [ ] INADEQUATE MAINTENANCE b. [X] FACILITY AGE c. [ ] DEFICIENT CONSTR. d. [ ] DEFICIENT DESIGN e. [ ] OTHER: _____

18. HAS THIS SPECIFIC PROBLEM BEEN CORRECTED PREVIOUSLY?

a. [ ] YES b. [X] NO When?

HOW LONG WILL PROPOSED CORRECTIVE ACTION LAST? 15 YEAR

19. ARE COMPONENTS BEING INCREASED IN SIZE OR CAPACITY? (Explain the difference in sizing)

a. [ ] YES b. [X] NO

20. ARE MATERIALS PROPOSED FOR USE THE SAME AS THOSE EXISTING? (If NO, explain the difference in sizing)

a. [ ] YES b. [X] NO Existing stone filtering media of trickling filters will be replaced by a plastic media. ($240K)

21. PROJECT IS PLANNED TO BE ACCOMPLISHED BY

a. [ ] STATION LABOR b. [X] CONTRACT

22. HAS A PROJECT EVER BEEN SUBMITTED FOR THE REPLACEMENT OF THIS OR SIMILAR FACILITIES? Check and explain if "YES"

a. [ ] YES b. [X] NO When?

23. ANTICIPATED SAVINGS IF PROJECT IS DONE THIS YEAR AS COMPARED TO A DEFERRAL OF ONE YEAR

PROBABLE INCREASE IN PROJECT COST FOR ANY JUSTIFIABLE REASON	REDUCTION IN CURRENT MAINT. COST	REDUCTION IN CURRENT OPERATIONS COST
$ 37,000	$ –	$ –

JUSTIFY ANY SAVINGS INDICATED	WHAT IS PAY BACK PERIOD OF PROJECT? (In years)
10% construction & repair costs increase	N/A

WILL ACCOMPLISHMENT GENERATE REQUIREMENTS FOR ADDITIONAL M&O FUNDS OR PERSONNEL? a. [X] NO b. [ ] YES Est. Amt

24. WHAT WOULD BE THE EFFECT OF DEFERRING THE PROJECT ONE YEAR?

STP operation will further deteriorate and will become less efficient.

*25. IF THE PROJECT IS NOT ACCOMPLISHED NOW, IN HOW MANY YEARS WILL THERE BE SERIOUS DAMAGE TO THE FACILITY AND/OR ITS CONTENTS OR IMPAIRMENT TO ESSENTIAL OPERATIONS? Explain, include damage to facility and/or contents

YEARS BEFORE SERIOUS DAMAGE OCCURS anytime.

*26. HAS THE REDUCED UTILIZATION OF THIS SPECIFIC FACILITY AFFECTED A LARGE FACILITY SYSTEM OPERATION? Explain

a. [X] YES b. [ ] NO BY HOW MUCH? _____ % Been the only STP serving the Industrial Area a reduced utilization of it will adversely affect operations at this site.

27. ARE THERE ANY OTHER FACTORS INVOLVED? Check and explain.

a. [ ] MORALE b. [X] HEALTH c. [ ] PUBLIC RELATIONS d. [ ] SAFETY e. [ ] FIRE PROTECTION f. [ ] SECURITY g. [ ] OTHER

b. Serious health hazard will be generated with a defficient operation of this STP.

28. CERTIFICATION BY RESPONSIBLE OFFICER AT ACTIVITY: I am personally cognizant of the need for, the essentiality of, and the proposed method of accomplishment of this project and certify that the above information is correct, and that the project meets all criteria specified in OPNAVINST 11010.20 and subsequent changes thereto

SIGNATURE	TITLE	DATE
J.B. Venable J.B. VENABLE	PWO CDR, CEC, USN	4/16/87

29. EFD TECHNICAL VALIDATION (If required) (see para 7303, OPNAVINST 11010.20C) PWO, CDR, CEC, USN

SIGNATURE	TITLE	DATE

ENCLOSURES

a. [ ] ENGINEERING EST. (NAVFAC 11013/7) b. [X] LOCATION PLAN(S) c. [X] DRAWINGS d. [X] ~~[illegible]~~ PEA

EXHIBIT I & II

*NOT applicable to Minor Construction, Alterations, or Equipment Installation

Prepared by: 183-2:MAS

SPECIAL PROJECT REQUEST
NAVFAC 11014/64 (REV. 8-74)
Supersedes NAVFAC 9-110(4/64 (11-68)
S/N 0105-LF-003-4230

STEP TWO SUBMISSION

1. ACTIVITY SNDL NO.	ACTIVITY NAME AND LOCATION	DATE SUBMITTED
6029-665	U.S. NAVAL STATION, ROOSEVELT ROADS, PR	OCT 86

2. PROJECT NO.: RC4-86(REV I)
TITLE: REPAIR/ALTER CAMP GARCIA STP VIEQUES ISLAND, U.S. NAVAL STATION, ROOSEVELT ROADS, PR

3. TYPE
a. [X] MAINT./REPAIR b. [X] MINOR CONSTRUCTION/ ALTERATION c. [ ] AIR CONDITIONING [ ] EQUIPMENT INSTALLATION

4. DESCRIBE AND STATE FUNCTION OF FACILITY
The facility is the Camp Garcia Sewage Treatment Plant which consists of two each receiving lagoons, two each polishing lagoons, a chlorinator facility, an ocean outfall and related appurtenances.

a. PROPERTY RECORD CARD NO.: 2-0801
b. NAVY CATEGORY CODE: 832-10
c. BLDG. OR STRUCTURE NO.: N/A

5. WHAT IS THE EFFECT OF THIS PROJECT ON THE MISSION OF THE ACTIVITY?
This Station maintains and operates facilities and provides services and materials to support operations of aviation activities and units of the operating forces of the Navy and other activities and units. This project proposes to correct deficiencies in the sewage treatment facility in order to provide a complete and reliable system in support of the training operations and other activities performed at Camp Garcia, Vieques. In addition, this project will bring up the STP to adequate operating... (See cont'd shee

6. THE REQUIREMENT FOR THE FACILITY IS BASED ON:
a. [ ] A CHANGE IN MISSION b. [X] FULL-TIME CONTINUING NEED c. [ ] 3 TO 5 YEAR NEED d. [ ] LESS THAN 3 YEARS' NEED e. [ ] CURRENTLY REQUIRED LESS THAN 50% OF TIME f. [ ] RESERVED FOR FUTURE REQUIREMENTS

7a. EST. FUNDED COST	7b. EST. PROJECT COST	7c. EST. PLANNING COST	7d. TOTAL FUNDS REQUESTED	7e. EST. FACIL. REPL. COST
$ 137,750	$ R=78,850 C=58,900	$ 8,250	$ 146,000	$ 197,000

8. DATE FACILITY CONSTRUCTED: 1953
9. IS FACILITY ON AN APPROVED BASIC FACILITY REQUIREMENTS LIST? *If "NO," how was need determined?*
[X] YES [ ] NO

10. IS PROJECT LISTED ON ANNUAL INSPECTION SUMMARY? *If answer is "NO," and AIS is applicable, explain exclusion.*
[X] YES [ ] NO [ ] N.A.

11. DESCRIBE CONDITION TO BE CORRECTED, OR PROBLEM TO BE SOLVED WITH PROPOSED SOLUTION. *Attach additional description if necessary, ONE PAGE ONLY.*
Currently, the Camp Garcia Sewage Treatment Plant is in need of repairs and modifications in order to prevent uncontrolled dissemination of untreated raw sewage water over land near the plant which is an environmental violation. In order to have a complete and reliable system, this project proposes the following work: (See cont'd sheet)

12. WHY IS THE PROPOSED SOLUTION BEST – AND WHAT ALTERNATIVES WERE CONSIDERED?
There is no other feasible alternative.

13. WERE ANY NON-NAVY EXPERTS INVITED TO REVIEW THIS PROBLEM AND THIS SOLUTION? *Explain effect on solution.*
a. [ ] YES b. [X] NO

14. HAS EFD DESIGN DIVISION REVIEWED SOLUTION? a. [ ] YES b. [X] NO

15. CAN ANOTHER FACILITY BE ECONOMICALLY ADAPTED FOR THIS FUNCTION? a. [ ] YES b. [X] NO

16. CAN PROJECT BE FUNDED IN PHASES? *How? How many?*
a. [ ] YES b. [X] NO

17. THIS PROJECT IS THE RESULT OF
a. [X] INADEQUATE MAINTENANCE b. [X] FACILITY AGE c. [ ] DEFICIENT CONSTR. d. [ ] DEFICIENT DESIGN e. [ ] OTHER: _____

18. HAS THIS SPECIFIC PROBLEM BEEN CORRECTED PREVIOUSLY?
a. [ ] YES b. [X] NO *When?*

HOW LONG WILL PROPOSED CORRECTIVE ACTION LAST? 10 YEAR

Encl. (2)

19. ARE COMPONENTS BEING INCREASED IN SIZE OR CAPACITY? *Explain the difference, including cost*

a. [X] YES b. [ ] NO

1. New irrigation field in substitution of the ocean outfall system.
2. New chain link fence in substitution of the barbed wire fences.

20. ARE MATERIALS PROPOSED FOR USE THE SAME AS THOSE EXISTING? *If "NO" explain the difference, including cost*

a. [ ] YES b. [X] NO

See above

21. PROJECT IS PLANNED TO BE ACCOMPLISHED BY

a. [ ] STATION LABOR b. [X] CONTRACT

22. HAS A PROJECT EVER BEEN SUBMITTED FOR THE REPLACEMENT OF THIS OR SIMILAR FACILITIES? *Check and explain if "YES"*

a. [ ] YES b. [X] NO *When?*

23. ANTICIPATED SAVINGS IF PROJECT IS DONE THIS YEAR AS COMPARED TO A DEFERRAL OF ONE YEAR

PROBABLE INCREASE IN PROJECT COST FOR ANY JUSTIFIABLE REASON	REDUCTION IN CURRENT MAINT. COST	REDUCTION IN CURRENT OPERATIONS COST
$ 14,600	$ N/A	$ N/A

JUSTIFY ANY SAVINGS INDICATED	WHAT IS PAY BACK PERIOD OF PROJECT? *(in years)*
10% increase in construction cost	N/A

WILL ACCOMPLISHMENT GENERATE REQUIREMENTS FOR ADDITIONAL M&O FUNDS OR PERSONNEL? a. [X] NO b. [ ] YES *Est. Ann.*

24. WHAT WOULD BE THE EFFECT OF DEFERRING THE PROJECT ONE YEAR?

Continuous violation to EQB standards

*25. IF THE PROJECT IS NOT ACCOMPLISHED NOW, IN HOW MANY YEARS WILL THERE BE SERIOUS DAMAGE TO THE FACILITY AND/OR ITS CONTENTS OR IMPAIRMENT TO ESSENTIAL OPERATIONS? *Explain, include dollar value to facility and/or contents*

YEARS BEFORE SERIOUS DAMAGE OCCURS _____ Damages have already occurred.

*26. HAS THE REDUCED UTILIZATION OF THIS SPECIFIC FACILITY AFFECTED A LARGE FACILITY SYSTEM OPERATION? *Explain.*

a. [ ] YES b. [X] NO BY HOW MUCH? _____%.

27. ARE THERE ANY OTHER FACTORS INVOLVED? *Check and explain.*

a. [ ] MORALE b. [ ] HEALTH c. [ ] PUBLIC RELATIONS d. [ ] SAFETY e. [ ] FIRE PROTECTION f. [ ] SECURITY g. [X] OTHER

Environmental

Improper operation of Camp Garcia Sewage Treatment Plant will provide of violation to the PREQB Regulations subject to fines against the Station.

28. CERTIFICATION BY RESPONSIBLE OFFICER AT ACTIVITY. I am personally cognizant of the need for, the essentiality of, and the proposed method of accomplishment of this project and certify that the above information is correct, and that this project meets all criteria specified in OPNAVINST 11010.20 and subsequent changes thereto.

SIGNATURE	TITLE	DATE
J B Venable U. B. VENABLE By direction	CDR, CEC, USN PWO	10/31/86

29. EFD TECHNICAL VALIDATION *(if required) (see para 7303, OPNAVINST 11010.20C)*

SIGNATURE	TITLE	DATE

ENCLOSURES

a. [X] ENGINEERING EST. *(NAVFAC ~~[illegible]~~)* 11013/7 b. [X] LOCATION PLAN(S) c. [X] ~~[illegible]~~ Plant Layout Sketch d. [X] ~~[illegible]~~ PEA e. [X] OTHERS, SEE BELOW

*NOT applicable to Minor Construction, Alterations, or Equipment Installation

FLFLANT ltr 11000 15:KDF:TWE of 26 Mar 86
Information on Sewage Treatment Plant Operation
1986 Utilization Schedule of Camp Garcia, Vieques.

6730 COPIES

SPECIAL PROJECT REQUEST
NAVFAC 11014/64 (REV. 8-74)
Supersedes NAVFAC 9-11014/64 (11-68)
S/N 0106-LF-003-4230

STEP TWO SUBMISSION

6730 COPIES

1. ACTIVITY SNDL NO.	ACTIVITY NAME AND LOCATION	DATE SUBMITTED
6029-665	U. S. NAVAL STATION, ROOSEVELT ROADS, PR	AUGUST 86
2. PROJECT NO.	**TITLE**	
R9-86	REPAIR SANITARY GRAVITY LINE AT BUNDY AREA	

3. TYPE
a. [X] MAINT./REPAIR b. [ ] MINOR CONSTRUCTION/ ALTERATION c. [ ] AIR CONDITIONING [ ] EQUIPMENT INSTALLATION

4. DESCRIBE AND STATE FUNCTION OF FACILITY

Facility is the Naval Station 4,900 lf sanitary line used to conduct the sanitary sewer from Lift Station 644 to the Bundy treatment plant facility.

a. PROPERTY RECORD CARD NO. 2-00620
b. NAVY CATEGORY CODE 832-10
c. BLDG. OR STRUCTURE NO. N/A

5. WHAT IS THE EFFECT OF THIS PROJECT ON THE MISSION OF THE ACTIVITY?

This Station maintains and operates facilities and provides services and materials to support operations of aviation activities and units of the operating forces of the Navy and other activities and units. This project will correct several deficiencies in the Bundy area sanitary gravity line.

6. THE REQUIREMENT FOR THE FACILITY IS BASED ON:
a. [ ] A CHANGE IN MISSION b. [X] FULL-TIME CONTINUING NEED c. [ ] 3 TO 5 YEAR NEED d. [ ] LESS THAN 3 YEARS' NEED e. [ ] CURRENTLY REQUIRED LESS THAN 50% OF TIME f. [ ] RESERVED FOR FUTURE REQUIREMENTS

a. EST. FUNDED COST	b. EST. PROJECT COST	c. EST. PLANNING COST	d. TOTAL FUNDS REQUESTED	e. EST. FACIL. REPL. COST
$ 110,000	$ 117,000	$ 7,000	$ 117,000	$ 2,257,112

7. DATE FACILITY CONSTRUCTED: 1943

9. IS FACILITY ON AN APPROVED BASIC FACILITY REQUIREMENTS LIST? If "NO," how was need determined?
[ ] YES [ ] NO Not required as per NAVFAC P-72

10. IS PROJECT LISTED ON ANNUAL INSPECTION SUMMARY? If answer is "NO," and AIS is applicable, explain exclusion.
[X] YES [ ] NO [ ] N.A.

11. DESCRIBE CONDITION TO BE CORRECTED, OR PROBLEM TO BE SOLVED WITH PROPOSED SOLUTION. Attach additional description if necessary, ONE PAGE ONLY.

The existing reinforced concrete pipe of the Bundy area sanitary line has developed various cracks along the pipe and joints. Tree roots have penetrated the line in many locations and improper slope has caused sediment accumulation thus reducing the pipe capacity. Due to these cracks, raw water is being discharged to the surface in violation of environmental laws and regulations. This project proposes the replacement of the 12"Ø & 24"Ø concrete pipeline by a 12"Ø & 15"Ø PVC SDR 35 pipe, respectively, including new 48"Ø precast manholes.

12. WHY IS THE PROPOSED SOLUTION BEST – AND WHAT ALTERNATIVES WERE CONSIDERED?

This is the only alternative, because the complete sanitary sewer line is in an advance stage of deterioration.

13. WERE ANY NON-NAVY EXPERTS INVITED TO REVIEW THIS PROBLEM AND THIS SOLUTION? Explain effect on solution.

a. [ ] YES b. [X] NO

14. HAS EFD DESIGN DIVISION REVIEWED SOLUTION? a. [ ] YES b. [X] NO

15. CAN ANOTHER FACILITY BE ECONOMICALLY ADAPTED FOR THIS FUNCTION? a. [ ] YES b. [X] NO

16. CAN PROJECT BE FUNDED IN PHASES? How? How many?
a. [ ] YES b. [X] NO

17. THIS PROJECT IS THE RESULT OF
[ ] INADEQUATE MAINTENANCE b. [X] FACILITY AGE c. [ ] DEFICIENT CONSTR. d. [ ] DEFICIENT DESIGN e. [ ] OTHER: _____

18. HAS THIS SPECIFIC PROBLEM BEEN CORRECTED PREVIOUSLY?
[ ] YES b. [X] NO When?

HOW LONG WILL PROPOSED CORRECTIVE ACTION LAST? 20 YEAR

P2

ECIAL PROJECT REQUEST
NAVFAC 11014/26 (REV. 8-74)
Supersedes NAVFAC 11014/64 (11-68)
SN 0105-LF-023-4730

STEP TWO SUBMISSION

1. ACTIVITY SHORE NO.	ACTIVITY NAME AND LOCATION	DATE SUBMITTED
6029-665	U.S. NAVAL STATION, ROOSEVELT ROADS, PR	NOV 85

2. PROJECT NO.	TITLE
C7-86	ALTER CAPEHART AREA SEWAGE TREATMENT PLANT

3. TYPE
a. [ ] MAINT./REPAIR b. [X] MINOR CONSTRUCTION/ ALTERATION c. [ ] AIR CONDITIONING [ ] EQUIPMENT INSTALLATION

4. DESCRIBE AND STATE FUNCTION OF FACILITY

The facility is the Capehart Area Sewage Plant which consists of sludge drying beds, lift stations, aeration tanks, settling tanks, aerobics sludge disgester tanks, clorine contact tanks, chlorination room, control room, and related appurtenances.

a. PROPERTY RECORD CARD NO. 2-02909
b. NAVY CATEGORY CODE 831-10
c. BLDG. OR STRUCTURE NO. 1691

5. WHAT IS THE EFFECT OF THIS PROJECT ON THE MISSION OF THE ACTIVITY?

This Station maintains and operates facilities and provides services and materials to support operations of aviation activities and units of the operating forces of the Navy and other activities and units. This project proposes the elimination of several pollution deficiencies and other problem areas within the Capehart Area Sewage Treatment Plant.

6. THE REQUIREMENT FOR THE FACILITY IS BASED ON:
a. [ ] A CHANGE IN MISSION b. [X] FULL-TIME CONTINUING NEED c. [ ] 3 TO 5 YEAR NEED d. [ ] LESS THAN 3 YEARS' NEED e. [ ] CURRENTLY REQUIRED LESS THAN 50% OF TIME f. [ ] RESERVED FOR FUTURE REQUIREMENTS

7a. EST. FUNDED COST	b. EST. PROJECT COST	c. EST. PLANNING COST	d. TOTAL FUNDS REQUESTED	e. EST. FACIL. REPL. COST
$ 48,600	$ 48,600	$ 3,000.000	$ 51,6000.00	$ 807,137

8. DATE FACILITY CONSTRUCTED	9. IS FACILITY ON AN APPROVED BASIC FACILITY REQUIREMENTS LIST? If "NO," how was need determined?
1970	[X] YES [ ] NO

10. IS PROJECT LISTED ON ANNUAL INSPECTION SUMMARY? If answer is "NO," and AIS is applicable, explain exclusion.
[X] YES [ ] NO [ ] N.A.

11. DESCRIBE CONDITION TO BE CORRECTED, OR PROBLEM TO BE SOLVED WITH PROPOSED SOLUTION. Attach additional description if necessary, ONE PAGE ONLY.

Currently, the Capehart Area Sewage Treatment Plant is in need of several repair items and some new construction in order to bring it up to operating standards to comply with the pollution abatement program. (See continuation sheet)

12. WHY IS THE PROPOSED SOLUTION BEST – AND WHAT ALTERNATIVES WERE CONSIDERED?

There is no other feasible alternative

13. WERE ANY NON-NAVY EXPERTS INVITED TO REVIEW THIS PROBLEM AND THIS SOLUTION? Explain effect on solution.

a. [ ] YES b. [X] NO

14. HAS EFD DESIGN DIVISION REVIEWED SOLUTION? a. [ ] YES b. [X] NO

15. CAN ANOTHER FACILITY BE ECONOMICALLY ADAPTED FOR THIS FUNCTION? a. [ ] YES b. [X] NO

16. CAN PROJECT BE FUNDED IN PHASES? How? How many?
a. [ ] YES b. [X] NO

17. THIS PROJECT IS THE RESULT OF
a. [ ] INADEQUATE MAINTENANCE b. [X] FACILITY AGE c. [ ] DEFICIENT CONSTR. d. [ ] DEFICIENT DESIGN e. [ ] OTHER: _____

18. HAS THIS SPECIFIC PROBLEM BEEN CORRECTED PREVIOUSLY?
a. [ ] YES b. [X] NO When?

HOW LONG WILL PROPOSED CORRECTIVE ACTION LAST? 10 YEAR

P2

19. ARE COMPONENTS BEING INCREASED IN SIZE OR CAPACITY? *Explain the difference including cost*

a. [ ] YES b. [X] NO

20. ARE MATERIALS PROPOSED FOR USE THE SAME AS THOSE EXISTING? *If "NO," explain the difference including cost*

a. [X] YES b. [ ] NO

21. PROJECT IS PLANNED TO BE ACCOMPLISHED BY

a. [ ] STATION LABOR b. [X] CONTRACT

22. HAS A PROJECT EVER BEEN SUBMITTED FOR THE REPLACEMENT OF THIS OR SIMILAR FACILITIES? *Check and explain if "YES."*

a. [ ] YES b. [X] NO *When?*

23. ANTICIPATED SAVINGS IF PROJECT IS DONE THIS YEAR AS COMPARED TO A DEFERRAL OF ONE YEAR.

PROBABLE INCREASE IN PROJECT COST FOR ANY JUSTIFIABLE REASON	REDUCTION IN CURRENT MAINT. COST	REDUCTION IN CURRENT OPERATIONS COST
$ 5,000	$	$

JUSTIFY ANY SAVINGS INDICATED	WHAT IS PAY BACK PERIOD OF PROJECT? *(In years)*
10% construction cost increase	N/A

WILL ACCOMPLISHMENT GENERATE REQUIREMENTS FOR ADDITIONAL M&O FUNDS OR PERSONNEL? a. [X] NO b. [ ] YES *Est. Ann.*

24. WHAT WOULD BE THE EFFECT OF DEFERRING THE PROJECT ONE YEAR?

Filtering operation of the Sewage Treatment Plant will further deteriorate.

*25. IF THE PROJECT IS NOT ACCOMPLISHED NOW, IN HOW MANY YEARS WILL THERE BE SERIOUS DAMAGE TO THE FACILITY AND/OR ITS CONTENTS OR IMPAIRMENT TO ESSENTIAL OPERATIONS? *Explain, include dollar value in facility and/or contents.*

YEARS BEFORE SERIOUS DAMAGE OCCURS anytime

*26. HAS THE REDUCED UTILIZATION OF THIS SPECIFIC FACILITY AFFECTED A LARGE FACILITY SYSTEM OPERATION? *Explain.*

a. [ ] YES b. [ ] NO BY HOW MUCH? _____%.

If this facility operation is reduced the whole Capehart area will be seriously affected, since this is the only STP for this area.

27. ARE THERE ANY OTHER FACTORS INVOLVED? *Check and explain.*

a. [ ] MORALE b. [X] HEALTH c. [ ] PUBLIC RELATIONS d. [ ] SAFETY e. [ ] FIRE PROTECTION f. [ ] SECURITY g. [ ] OTHER

Serious health hazard can be caused by deficient STP operation.

28. CERTIFICATION BY RESPONSIBLE OFFICER AT ACTIVITY. I am personally cognizant of the need for, the essentiality of, and the proposed method of accomplishment of this project and certify that the above information is correct, and that this project meets all criteria specified in OPNAVINST 11010.20 and subsequent changes thereto.

SIGNATURE	TITLE	DATE
TCWisehart	T. C. WISEHART APWO LCDR, CEC, USN	11-29-85

29. EFD TECHNICAL VALIDATION *(if required) (see para 7303, OPNAVINST 11010.20C)*

SIGNATURE	TITLE	DATE

ENCLOSURES

a. [X] ENGINEERING EST. *(NAVFAC ~~XXX~~* 11013/7 b. [X] LOCATION PLAN(S) Exhibit I c. [X] DRAWINGS Exhibit II d. [X] ~~XXXXXXXXX~~ ~~PROGRAMS~~ PEA

*NOT applicable to Minor Construction, Alterations, or Equipment Installation

S/N 0105-LF-003-4230

SUMMARY OF CONFERENCE
STUDY FOR ELIMINATION OF NPDES VIOLATIONS
ROOSEVELT ROADS, PUERTO RICO
CONTRACT NO. N62470-87-C-9009
A&E COMMISSION NO. 1735A
8 JUNE 1988

LOCATION: Office of Public Works
Roosevelt Roads, Puerto Rico

PRESENT FOR: Public Works Department

Felix Mestey, Environmental
Luis Andreo, Technical Management

Safety Santiago

Esmael Santiago

Industrial Hygiene Branch

Ensign Lynn Wilson

Hayes, Seay, Mattern and Mattern, Inc. (HSMM)

Robert Canova
Randal Owen

The following items of discussion, agreement, and direction took place concerning sources of industrial wastewater at the station:

1. HSMM summarized the Potential Industrial Wastewater Sources identified on 6 June 1988 by Planning.

2. Environmental will provide HSMM with a Real Property Inventory List of the station and a station telephone directory.

3. Safety Office will provide HSMM with a data base identifying substance storage locations and disposal method on the station, and a list of facilities, which identifies the facility department (user).

4. HSMM will contact Safety Office (Bldg., 735, 3rd floor Ext. 3010 in Bundy) to discuss facility activities with Safety Office inspectors.

5. Environmental advised that Naval Energy and Environmental Support Activity (NEESA) is conducting a Solvent and Used Oil Elimination System Program Study. Final report is due 15 July 1988. Environmental will provide HSMM with the draft documents.

6. Technical Management will provide HSMM a list of sewage pumping stations which have emergency generators.

7. For information related to contractor industrial activities (G.E. Services) on the station, contact Mr. Nester Paradise (Ext. 72-353) of Atlantic Fleet Weapon Training Facility. For information about Seabee Camp, contact Chief Cauldwell.

8. The following additions and revisions to the Potential Industrial Wastewater Sources were provided:

BUNDY AREA

FAC. NO.	ACTIVITY
724,731, 732, 733, 734, 729, 1686	Cold storage or air chillers with blow-down and/or refrigerants
1990,1991	Emergency Generator
513, 514, 510	Auto Service

CAPEHART AREA

FAC. NO.	ACTIVITY
1567	Mini-mart with cold storage and air chillers
1511	Tool and Machine Rental and Service
737, 1973	Communication Equipment
386	Emergency Generator

INDUSTRIAL AREA

FAC. NO.	ACTIVITY
3177 (CB), 1985, 1963	Vehicle Wash Racks
2036	Oil Spill Support Building
53, 1790, 379, 378, 426, 1970, 1976	Cold Storage and/or Air Chillers
3152 (CB)	Pest Control Building
1090, 1739, 2252 (CB)	Boat Repair Shop
(CB)	Asphalt Test Lab
373, 1973	Hazardous Waste Storage

2842	Equipment Overall
3157 (CB)	Armory For Weapons Cleaning
3158 (CB)	Battery Charging
359	Aircraft Wash Rack

9. Food service facilities may have cold storage equipment which could discharge refrigerants to the sanitary sewers.

10. Torpedo shop area, Facility 394-1730, is now sewered.

Prepared by:

Hayes, Seay, Mattern and Mattern, Inc.

Robert F. Canova

Robert F. Canova

RFC/ros

SUMMARY OF TELEPHONE CONFERENCE

Project: Study for Elimination of NPDES Violations
Roosevelt Roads, Puerto Rico
Contract No. N62470-87-C-9009

A&E Commission No. 1735A Date: 8 June 1988 Time: 3:00 p.m.

Initiated by: Jill Wanner For: Naval Energy and Environmental Support Activity

Received by: Robert Canova For: Hayes, Seay, Mattern and Mattern, Inc.

Summary of Discussion:

NEESA is preparing a study of solvent and used oil elimination and recycling. Final report is due in mid July 1988. Attached is a list of oils and solvents identified at the station.

HSMM may contact Jill Wanner, Port Hueneme, CA at 805-982-3351.

NEESA wants to kow if HSMM considers ethylene glycol from engine coolant a contaminant.

Prepared by:

Hayes, Seay, Mattern and Mattern, Inc.

Robert F. Canova

Robert F. Canova

RFC/ros

USED OIL & SOLVENT STUDY, NAVSTA ROOSEVELT ROADS

SHOP	PROCESS	CHEMICAL	QUANTITY DISP (GAL/YR)	CONTAMINANTS	DISPOSAL PROCEDURE
FM TRANSPORTATION	PARTS WASHER	PD-680	540	GREASE, DIRT	OFF-SITE RECLAM
	ENGINE MAINTENANCE	OILS	6000	DIRT	500 GAL AGT
AFWTS					
MARINE OCEAN ENG'G	PARTS WASHER	DIESEL OIL	60	GREASE, DIRT	55 GAL DRUM CRASH CREW
UNDERWATER WPNS SUP	M-46 TORPEDO CLEANING	MINERAL SPIRITS	1800	OTTO FUEL, OIL	55 GAL DRUM, KEYPORT
	M-46 TORPEDO CLEANING	AGITENE (MINERAL SPIRITS+ ADDITIVES)	880	OTTO FUEL, OIL	
AERIAL TARGET SUP	DEFUELING & ENGINE MAINTENANCE	JP-4 LUBE OILS	2500	DIRT	OIL-WATER SEP
	ENGINE DECONTAMINATION	PD-680	1000	JP-5 & JP-4	OIL-WATER SEP
SURFACE OPS	OIL SPILL CLEAN-UP BILGE OFF-LOADING	OILS	150000	WATER, SOLVENTS	75000 SWOB
	PAINTING	THINNERS	40	PAINT	55 GAL DRUM
NAVY EXCHANGE					
DRY CLEANING PLANT	DRY CLEANING	PERCHLOROETHYLENE — Recycle of PD-680	90	CARBON, FILTER PWDR,	
SERVICE STATIONS	ENGINE MAINTENANCE	OILS	500	DIRT	500 GAL TANK
AIMD	PARTS WASHER	PD-680	2000	DIRT, GREASE	55 GAL DRUM (WITH NDI PD-680)
	PARTS WASHER (NDI)	PD-680	400	MAGNOGLO	55 GAL DRUM
	PARTS WASHER (RIMS)	PD-680	60	BERYLLIUM, DIRT	55 GAL DRUM (SEGREGATED)
	SUPPORT EQPT WASHING	NAPTHA SOLVENT	?	WATER	SEWER
	HYDRAULIC FLUID PATCH TESTING	FREON	150	HYDRAULIC FLUID	55 GAL DRUM

USED OIL & SOLVENT STUDY, NAVSTA ROOSEVELT ROADS

	ENGINE MAINTENANCE	OILS	1100	DIRT	500 GAL BOWSER
COAST GUARD	ENGINE MAINTENANCE BILGE/OFF-LOADING	OILS	2000	WATER, DIRT	250 GAL BUFFALO
	PARTS WASHER	DIESEL FUEL	35	DIRT, GREASE	250 GAL BUFFALO (WITH OILS)
	PARTS WASHER	AGITENE (MINERAL SPIRITS)	10 (30 GAL/3 YRS)	DIRT, GREASE	?
VC8	AIRPLANE MAINTENANCE	OILS	1200	DIRT, GREASE, JP-5	500 GAL BUFFALO
	DEFUELING	JP-5 & JP-4	1000	DIRT	5000 GAL TANK
NCB4	ENGINE MAINTENANCE	OILS	2500	DIRT	450 GAL TANK
	PARTS WASHERS	pad/berm around tank is needed PD-680	110	DIRT, GREASE	55 GAL DRUM
FUELS DEPT	CATCH BASINS	JP-5 & DFM	15000	DIRT,WATER,ADDITIVES	OIL-WATER SEP
*	TANK CLEANINGS	JP-5 & DFM	45000	DIRT, WATER	OIL-WATER SEP
MWR					
AUTO HOBBY SHOP	ENGINE MAINTENANCE	OILS	2000	DIRT	55 GAL DRUM
	~~pad/berm around tank is needed~~.				
MOTOR POOL	ENGINE MAINTENANCE	OILS	1200	DIRT	100 GAL BUFFALO
HANGER 800	AIRPLANE MAINTENANCE	OILS	?	?	55 GAL DRUMS

This is a serious RCRA violations activity. HW instruction/procedures are not being implemented/neither enforced for compliance. Drums used are not adequately identified to promote segregation.

SUMMARY OF CONFERENCE
STUDY FOR ELIMINATION OF NPDES VIOLATIONS
ROOSEVELT ROADS, PUERTO RICO
CONTRACT NO. N62470-87-C-9009
A&E COMMISSION NO. 1735A
13 JUNE 1988

LOCATION: Office of Public Works
Roosevelt Roads, Puerto Rico

PRESENT FOR: Atlantic Division, Naval Facilities Engineering Command

Wallace Carter (804-445-2933)
Brad Rock (804-445-2934)

Public Works, Environmental

Felix Mestey (809-865-2507)

Hayes, Seay, Mattern and Mattern, Inc. (HSMM)

Robert Canova (703-857-3155)
Randal Owen (804-490-2547)

The following items of discussion, agreement, and direction took place concerning preparation for the 14 June 1988 meeting with EQB:

1. HSMM summarized initial industrial discharge investigation. Identified problems include:

FAC NO.	USE
2034	Pest Control
2086	Flammable Storage
2036	Oil Spill Containment
443	Defuel Vehicle
826A	Service Vehicle Maintenance
379	Aircraft Hangar
396	Aircraft Wash Rack
1673	Sandblast and Spraypaint
860	Aerial Target Servicing

2. Environmental reviewed drawings for MILCON Project P-703, as follows:

   a. Fac. No. 2034 discharges to sanitary sewer
   b. Fac. No. 2086 discharges to container
   c. Fac. No. 443 discharges to storm drain
   d. Fac. No. 860 fuel tank underflow discharges to sanitary sewer

3. It was agreed that priority pollutant analysis at the wastewater treatment plants will be expanded to incorporate parameters on EQB Water Quality Standards.

4. Sampling and analysis will be completed at the three plants before beginning industrial discharge sampling. Industrial discharge sampling will be by grab sample instead of composite sampling.

5. EQB will be asked the following:

   a. Comment on proposed scope of work.

   b. Request to analyze only for pesticides that are on Roosevelt Roads inventory.

   c. Request to agree on revised compliance schedule stipulated in project contract.

Prepared by:

Hayes, Seay, Mattern and Mattern, Inc.

Robert F. Canova

Robert F. Canova

RFC/ros

SUMMARY OF CONFERENCE
STUDY FOR ELIMINATION OF NPDES VIOLATIONS
ROOSEVELT ROADS, PUERTO RICO
CONTRACT NO. N62470-87-C-9009
A&E COMMISSION NO. 1735A
14 JUNE 1988

LOCATION: Office of Environmental Quality Board
San Juan, Puerto Rico

PRESENT FOR: Atlantic Division, Naval Facilities Engineering Command

Wallace Carter (804-445-2933)
Brad Rock (804-445-2934)

Public Works, Environmental, Roosevelt Roads

Felix Mestey (809-865-2507)

Environmental Quality Board, Puerto Rico

Carlos Irizarry (809-722-4674)

Larsen Engineers, Inc.

Shashank Nadgauda (309-595-4600)

Hayes, Seay, Mattern and Mattern, Inc. (HSMM)

Robert Canova (703-857-3155)
Randal Owen (804-490-2547)

The following items of discussion, agreement and direction took place:

1. EQB provided Public Works with Novemeber 1987 amendment to Water Quality Standards and April 1988 Interim Mixing Zone and Bioassy Guidelines for reproduction and distribution.

2. EQB advised that Water Quality Standards are being revised. Copy of proposed revision was provided to Public Works for reproduction. Copy of standards for inorganic substances is attached.

3. EQB advised that the current NPDES permits for the plants require that effluent quality comply with the EQB Water Quality Standards. However, the permit does not require Water Quality Standard analysis.

4. HSMM reviewed the project scope of work as follows:

   a. Analysis of plant effluents, including all parameters of EPA Priority Pollant List and EQB Water Quality Standards.

b. Develop a list of potential industrial discharges to the sewage collection system.

c. Recommend upgrade to the sewerage systems, as:

(1) Best management practice
(2) Industrial pre-treatment
(3) Wastewater treatment plant modifications

d. Impact of upgrade on plant effluent quality.

e. Cost of upgrade.

f. Mixing zone evaluation is not a part of the project scope of work; objective is to achieve effluent standards at the plant outfall without a mixing zone.

5. LANTDIV will advise EPA in writing of a proposed compliance schedule, copy to EQB, within two weeks. The letter will advise only of the date for submittal of approvable engineering report and an explanation of when subsequent compliance dates can be established.

6. EQB advised that a minimum of 45 days will be required for EQB review and response to the draft engineering report. However, submittal of the draft engineering report to EQB in mid October 1988 may be a problem, due to other end-of-year projects and vacation/holiday schedules. LANTDIV proposed receipt of EQB comments by 2 December 1988 and a project completion date on 13 January 1989.

7. EQB advised that the NPDES permits, effective 1 October 1989 to 1 May 1991, require an effluent nitrogen concentration of 5 mg/l. Nitrogen is defined as the sum of nitrate, nitrite and ammonia.

8. An outfall treatment process was discussed in which wastewater concentrations in the outfall are reduced, to Water Quality Standard limits, by introducing receiving water into the outfall prior to discharge of wastewater effluent to the receiving water. The plant effluent must meet national effluent permit standards prior to introduction of the receiving water to the outfall. Public Works advised that an abandoned power plant intake exists adjacent to the Industrial Area wastewater treatment plant.

9. The priority pollutant sampling will be scheduled as follows:

a. Industrial Area - mid-week during major station exercises

b. Bundy Area - mid-week

c. Capehart Area - weekend

10. EQB and EPA will be provided copies of the Plan of Action for the project. HSMM will review the Plan for Action with EQB and EPA in August 1988 at EQB office.

11. HSMM will obtain "Normas De Diseño Para Sistemas De Tratamiento De Agua" (Design Standards for Water Treatment Systems) from EQB. Copy of available publications is attached; the standards are part of Document 012.

Prepared by:

Hayes, Seay, Mattern and Mattern, Inc.

Robert F. Canova

Robert F. Canova

RFC/ros

SUMMARY OF SITE VISITS TO WASTEWATER TREATMENT PLANTS
STUDY FOR ELIMINATION OF NPDES VIOLATIONS
ROOSEVELT ROADS, PUERTO RICO
CONTRACT NO. N62470-87-C-9009
A&E COMMISSION NO. 1735A
6-16 JUNE 1988

The following observations were made by HSMM, Inc. during site visits to the three wastewater treatment plants at Roosevelt Roads:

INDUSTRIAL AREA WTP

1. Operator is Mr. Ortiz (Ext. 4235).

2. One trickling filter is experiencing surface flooding. Long-stranded alga is evident on the stone media experiencing the flooding. It is unclear whether the alga is a cause or result of the flooding. HSMM recovered samples of algal growth for identification.

3. Lime is periodically added to the chlorine contact tank influent.

4. Plant housekeeping was outstanding and effluent quality appeared to be excellent.

5. One sludge bed had been loaded with liquid sludge from the Capehart Area WTP.

6. A portable skimmer was in place to remove free oil from the aerated lagoon. Two of the four floating lagoon aerators were out of service.

7. Newly installed effluent parshall flume and capacitance probe appeared to be operational.

8. Sampling locations will be:

#1	Raw Sewage	Influent manhole upstream of lift station
#2	Lagoon Effluent	Manhole between lagoon and primary clarifier
#3	Primary Clarifier Effluent	Common effluent Channel at outlet pipe
#4	Secondary Clarifier Effluent	Common effluent channel at outlet pipe
#5	Chlorinated Effluent	Manhole downstream of chlorine contact tank

CAPEHART AREA WTP

9. Operator is Angelo Colon; night shift operator is Rico Rodrigez (Ext. 4067).

10. Sludge bed area is indequate.

11. Operators report high morning-hour and evening-hour flows. Newly installed effluent parshall flume and capacitance probe did not appear to be properly calibrated.

12. Lime is periodically added to the chlorine contact tank influent.

13. Plant housekeeping was outstanding and effluent quality appeared to be excellent.

14. The old extended aeration plant (A) and the new plant (B) operate as independent biological plants. Raw sewage is split at the lift station influent and chlorinated effluent is recombined upstream of the plant outfall.

15. Sampling locations will be:

#1	Raw Sewage	Flow-splitting influent manhole upstream of lift stations
#2A	Secondary Clarifier Effluent	Old secondary clarifier effluent sump
#2B	Secondary Clarifier Effluent	New secondary clarifier effluent sump
#3	Chlorinated Effluent	Manhole downstream of chlorine contact tank

16. HSMM and LANTDIV agreed that sample location #2 would be split four days at #2A and three days at #2B.

BUNDY AREA WTP

17. Operator is Mr. Vidal; night shift operator is Segismundo Pagan (Ext. 4110).

18. One trickling filter has been out of service for an extended period due to low flows.

19. Lime is periodically added to the chlorine contact tank influent.

20. Plant housekeeping was outstanding and effluent quality appeared to be excellent.

21. Newly installed effluent parshall flume and ultrasonic level transmitter did not appear to be properly calibrated.

22. Sampling locations will be:

#1	Raw Sewage	Influent of bar screen chamber
#2	Primary Clarifier Effluent	Common effluent channel at outlet pipe
#3	Secondary Clarifier Effluent	Common effluent channel at outlet pipe
#4	Chlorinated Effluent	Manhole downstream of chlorine contact tank

Prepared by:

Hayes, Seay, Mattern and Mattern, Inc.

Robert F. Canova

Robert F. Canova
Vice President, Civil Works

RFC/ros

SUMMARY OF CONFERENCE
STUDY FOR ELIMINATION OF NPDES PERMIT VIOLATIONS
U.S. NAVAL STATION, ROOSEVELT ROADS, P.R.
CONTRACT NO. N62470-87-C-9009
A&E COMMISSION NO. 1735A
1 DECEMBER 1988

LOCATION: Office of Environmental Quality Board
Santurce, Puerto Rico

PRESENT FOR: Environmental Quality Board (EQB)

Wanda Garcia
Eira Medina

Atlantic Division Naval Facility Engineering Command (LANTDIV)

Wallace Carter

Naval Station, Roosevelt Roads (NAVSTA)

Felix Mestey
Egardo Ramos

Larsen Engineers, Inc. (Larsen)

Manu Patel
Shashank Nadgauda

Hayes, Seay, Mattern and Mattern, Inc. (HSMM)

Robert Canova

The following improvements to the NAVSTA wastewater treatment plants were presented to EQB:

Industrial Area Wastewater Treatment Plant

1. Add equipment to remove accumulated oil/grease from the aerated lagoon.

2. Add an operating program to periodically clean sludge and grit from the aerated lagoon.

3. Add a grit removal system.

4. Perform a pilot study of the denitrification removal performance of a partially - flooded trickling filter. EQB will evaluate the pilot study and advise NAVSTA by 10 December 1988 of the potential to extend the compliance schedule to enable the pilot study to be accomplished. LANTDIV expressed concerns about the pilot study funding.

5. Repair trickling filter rotary distributor.

6. Repair the trickling filter media with stone or plastic media, depending on the results of the pilot study.

7. Add a denitrification process, the method will depend on the results of the pilot study.

8. Add dechlorination and a caustic feed system to elevate effluent pH. EQB advised that the future Water Quality Standards will have residual chlorine concentrations lower than 0.5 mg/l.

9. Elevate effluent dissolved oxygen, either by improved aeration in the trickling filter, by a post aeration system, or by the effluent denitrification process, depending on the results of the pilot study.

10. It was noted that the NPDES permit requires the effluent values of BOD_5 and total suspended solids to be no more than 15% of influent values. The report will recommend that the NPDES permit be amended to delete the percent removal requirements. EQB advised that the condition has been deleted for weak raw sewages at other plants. EQB will discuss the condition with EPA and advise NAVSTA by 10 December 1988.

11. EQB advised that plant effluent limits require color of less than 10 ntu and turbidity less than the background receiving stream.

12. Repipe trickling filter effluent return to improve distribution to the two primary clarifiers.

13. Divert aerated sludge recirculation to the primary clarifiers.

Capehart Wastewater Treatment Plant

14. Provide nitrogen removal, dechlorination, post aeration and pH elevation as stated in the report. EQB noted that the plant site will restrict the ability to provide the improvements. Additional land will be required, or the plant must be reduced in capacity.

15. Increase sludge dewatering capacity, with vacuum sludge beds or a belt filter press.

16. Repair sanitary sewers to reduce infiltration into the collection system.

17. Transfer some sewage from the Capehart WTP to the Industrial WTP. NAVSTA noted that recent flow data indicates that current plant flows are greater than stated in the Draft Final Engineering Report.

18. Add a grit removal system.

Bundy Wastewater Treatment Plant

19. Provide nitrogen removal, dechlorination, post aeration and pH elevation, as stated in the report. The method of nitrogen removal and post aeration will depend on the results of the trickling filter denitrification pilot study.

21. Add quench tanks at battery rooms to reduce the possibility of acid or lead discharges to the wastewater treatment plants.

22. The Final Engineering Report will be delivered to EPA by 13 January 1989. A copy will be submitted to NAVSTA, LANTDIV, and Larsen in advance, for a final check.

Prepared by:

Hayes, Seay, Mattern and Mattern, Inc.

Robert F. Canova

Robert F. Canova
Vice President, Civil Works

RFC/ros

SUMMARY OF CONFERENCE
STUDY FOR ELIMINATION OF NPDES VIOLATIONS
U.S. NAVAL STATION, ROOSEVELT ROADS, P.R.
CONTRACT NO. N62470-87-C-9009
A&E COMMISSION NO. 1735A
1 DECEMBER 1988

LOCATION: Naval Station, Environmental
Roosevelt Roads, P.R.

PRESENT FOR: Larsen Engineers Inc. (Larsen)

Shashank Nadgauda
Manu Patel

Atlantic Division Naval Facilities Engineering Command (LANTDIV)

Wallace Carter

Naval Station, Environmental (NAVSTA)

Felix Mestey
Egardo Ramos
Wilfredo Rivera

Hayes, Seay, Mattern and Mattern, Inc. (HSMM)

Robert Canova

Attached Review Comments related to the Draft Final Engineering Report were distributed by LANTDIV and NAVSTA. Following is a summary of discussion, agreement and direction:

1. HSMM will include a discussion of aerated lagoon impact on plant performance and reliability. Address flow and strength equalization, loss of lagoon volume due to grit and sludge accumulation, and impact of existing aeration energy. HSMM will conclude that the lagoon should be cleaned periodically; approximately every five years.

2. HSMM will discuss need for grit collectors at Industrial WTP and Capehart WTP. NAVSTA advised that the following grit problems have occurred:

   a. Capehart sewage pump damage.

   b. Wetwell grit accumulation.

   c. Bar screen grit accumulation at Industrial WTP prior to lagoon installation.

3. NAVSTA will provide HSMM with scope of work for a Capehart Planned Special Program, C786.

4. HSMM will substantiate recommendation that trickling media at Industrial WTP can best be accomplished by cleaning existing store media.

5. HSMM will discuss the current repair requirements at the plants including:

   a. Industrial WTP trickling filter distributor.

   b. Improve trickling filter recirculation flow balance to the two Industrial WTP primary clarifiers.

6. NAVSTA is concerned that violations occur when the WTP's do not remove 85 percent of BOD5 and suspended solids. HSMM will determine from EQB if the percent removal deficiency is a violation that must be addressed.

7. NAVSTA is concerned that denitrification by flooding the trickling filters will have an impact on the compliance schedule and requirements for duplication of the aerated lagoon, since the lagoon would become a critical treatment component. HSMM will discuss the pilot study with EQB, particularly the impact on the compliance schedule.

8. NAVSTA advised that a portion of raw sewage from the Capehart WTP service area will be diverted to the Industrial WTP. NAVSTA will provide HSMM with the project scope of work, but the project will not be discussed in the report.

9. Industrial WTP primary clarifier weirs will not be modified. During trickling filter design, consider evaluation of the hydraulic performance of the clarifiers.

10. HSMM will examine historical turbidity and color analysis results from NAVSTA files to determine impact of color and turbidity violations.

11. NAVSTA noted that the Industrial WTP sludge production was greater before the lagoon was installed; however, the sludge beds were adequate and are currently adequate.

12. HSMM will discuss the impact of denitrification on sludge production at the plants.

13. HSMM did not determine if restaurants have grease traps.

14. HSMM will recommend that periodic inspection of oil/water separators and removal of accumulated oil/grease be improved, to assure good operation of the existing oil/water separators.

15. HSMM will add a paragraph to the report to interpret Tables 10, 11 and 12.

16. HSMM will emphasize that improved oil/grease removal at the source is the primary method of controlling oil/grease; the Industrial WTP lagoon is a secondary protection feature.

17. HSMM will include the NPDES effluent characteristic from page 19 in the executive summary.

18. HSMM will delete reference to violations of nonpesticide organics and pesticides concentrations from the identified problems (pages 5 and 49).

19. HSMM will clarify the NAVSTA alternative solution for Facility 826, 1673, 369 and 2036 (pages 64 and 65).

20. NAVSTA provided HSMM with the aircraft cleaning compound proposed for use (page 65) and a revised flow schematic for the Industrial WTP.

21. NAVSTA advised of a proposed second aircraft wash rack near Hangar 200, equivalent to Facility 369 (page 65).

22. HSMM will advise of the location of vehicle wash racks on the Station and state that they are not deemed to be a source of oil/grease.

23. NAVSTA observed that some washwater flows around the oil/water separator at Facility 826; the approach channel will be modified.

24. HSMM will use NAVSTA nomenclature for the pollutant parameters; refer to Attachment Item 20.

25. HSMM will add tables to summarize effluent water quality analysis, RCRA standards, EQB Water Quality Standards, and NPDES permit limits.

26. HSMM will add to the table on page 52 the results of 1984 effluent metals analysis from the outfall report. HSMM will state that the metals violations were perceived to be analytical errors, were checked against NAVSTA water supply, were resampled, and it was concurred that the violations were due to sample error (page 52).

27. HSMM will recommend a high liquid level alarm for Facility 860 (page 63).

28. NAVSTA provided HSMM with more current Capehart WTP flow data.

29. On 2 December 1988, the problems with site limitations at the Capehart WTP were discussed. NAVSTA is considering abandoning the Capehart WTP and pumping the raw sewage to the Industrial WTP or Bundy WTP. An earlier study considered abandonment of all three plants and pumping the raw sewage to a regional municipal plant; the alternative was not recommended. HSMM will re-evaluate the costs for Capehart WTP improvements, based on development on land to the east or west of the existing plant. Note that the east site is a mangrove area, which would require relocation and permits. The west site is on a high hill and is being considered for expansion of Coast Guard housing.

30. HSMM will revise the Industrial WTP recommendations to increase the unit process capacities for the primary clarifiers and sludge drying beds.

31. HSMM will upgrade the Capehart WTP collection system infiltration remediation program to equivalent fiscal year dollars. All costs will be upgraded to FY 92 dollars.

32. LANTDIV requested that the report be restructured to discuss each plant completely, rather than to discuss each phase of the project jointly for all plants.

Prepared by:

Hayes, Seay, Mattern and Mattern, Inc.

Robert F. Canova

Robert F. Canova
Vice President, Civil Works

RFC/ros

2 December 1988

STUDY FOR ELIMINATION OF NPDES VIOLATIONS
NAVAL STATION, ROOSEVELT ROADS

Review Comments

1. The report makes no reference to the aerated lagoon in regards to its impact on the Industrial WWTP efficiency. It is also suspected that the lagoon volume is being lost due to grit/sludge accumulation. There is a need to evaluate the lagoon actual detention time against design.

2. On page 6, the recommended wastewater system improvements for the Industrial WWTP need to include inspection to identify ~~any~~ deficiencies ~~repair~~ with ~~to~~ the Trickling Filter system underdrain systems and repair to the distribution arms. The report does not discuss/identify what type of media replacement would be best installed in the Trickling Filters. Page 59 identifies media replacement by Special Project NO. RC-16-85 as the second alternative.

3. Implementation of Project NO. RC-16-85 is the most practical alternative. The Trickling Filter Pilot Study will not be pursued.

4. The primary Clarifier and overflow weir for the Industrial WWTP have been identified of having design deficiencies. These structures are critical to the effective operation of the Trickling Filters and should be recommended for correction.

5. The report needs to address Turbidity and Color violations at each plant. Refer to Page 5, Item 2.

6. Nowhere does the report addresses provisions for grit removal at the Three (3) WWTPs.

7. The Industrial WWTP Sludge drying beds are inadequate. Page 6 does not include costs for improvements.

8. The sludge beds expansion must take into account Nitrification/Denitrification modifications to be provided at the Industrial and Capehart WWTPs which will cause extra sludge generation.

9. The total Capital Costs at the bottom of Page 5 to bring the WWTPs into Compliance is not all inclusive and will have to be revised upward.

10. Do the Vehicle Maintenance Garages and Auto Hobby Shops identified on Page 12 have maintenance Bays / floor drains. If so, are they connected to the Sanitary Sewer via an O/W separator?

11. Do the two restaurants identified on Page 12 have grease traps via sanitary sewer connection? Please address.

12. The report needs to establish a routine inspection / maintenance schedule for all O/W separators and grease traps. The recommendation should also delegate this responsibility to the Public Works Department.

13. Page 50 states that design deficiencies do not appear to adversely affect performance of the Industrial WWTP. The following comment would provide more basis to support this conclusion which is not presently obvious.

14. Tables 10 through 12 provide a summary of the wastewater characterization study at the three (3) WWTPs. More detailed interpretation evaluation of this information is warranted. The actual percentage removal for each of the

parameters by each of the unit processes should be calculated and compared with the typical percentage removal for such processes in order to provide a clearer picture of the three (3) WWTPs operation / efficiency in respect to their design shortcomings.

15. Page 50, Item 5 Plant improvements to install O/G skimmer in the aerated lagoon must be recognized as a necessary second line of defense. Efforts must still be pursued to identify all violations at the source for corrective action.

16. Information regarding the NPDES Permit on Page 19 and 20 should be located near the front of the report since it establishes the basis for the study.

17. Paragraph on the bottom of Page 20 states that no evidence is found to link industrial spills or discharges from the three (3) WWTPs with NPDES violations. Elsewhere it is indicated that design shortcomings are not a problem. A qualification statement (s) needs to specified exactly why the NPDES violations are occurring.

18. Pages 5 and 49 indicate that nonpesticide organics and pesticides as a violation problem. This contradicts the statement on page 44 and other parts of the report that those parameters were non-detectable.

19. Section 4 on Page 64 is vague and inconclusive. No recommendations for problems identified at Facilities 369, 826 and 1673.

20. <u>Nomenclatures Correction - Refer to Pages 25, 29, 43, 48 and etc</u>

Oil / grease - O/G
Chlorine Residual - CL_2 Residual
Fecal Coliform - FC
Mixed Liquor Suspended Solids - MLSS
Mixed Liquor Volatile Suspended Solids - MLVSS
Wastewater Treatment Plant - WWTP

21. Low organic loading at all three (3) WWTP needs to be address particularly in regard to the NPDES Permit requirement to have an effective percentage removal for BOD, TSS etc regardless of sewage strength.

22. Tables need to be provided comparing actual testing data results with NPDES and EGB WQS.

23. Initial sampling results for EQB WQS inorganic metals (Cu, Pb, Ni, Hg) were in violations. Resampling showed same metals to be undetectable. Discussion on issue was inconclusive. The table on page 52 needs to be expanded as follow leading to a definitive position:

Metal	1988 Effluent	1988 Effluent	1984 Effluent	EQB Standards	1984 Sea Water	Drinking Water
Copper	ND	10 ug/l	—	5 ug/l	10 ug/l	1000 ug/l
Lead	ND	11 ug/l	—	5.6 ug/l	10 ug/l	50 ug/l
Nickel	ND	20 ug/l	—	8.3 ug/l	10 ug/l	50 ug/l
Mercury	ND	—				

24. Improvements must also address installing oil monitoring device on Building 860 and Oil Spill Building O/W separators.

25. There may be other facilities other than those identified on page 12 that should be investigated/discussed by the engineering report as sources of periodic discharges or spills of pollutants/toxins to the WWTPs. They are

26. As discussed on Page 62, what other measures should the Station take (i.e., in addition to testing/neutralization) to ensure that quench waters from battery shops containing possible heavy metal discharges will not be harmful to the Industrial WWTP or violate EQB WQS, once discharged.

27. Page 19 identifies the following facilities as being connected to the Bundy WWTP collection system: Laundry and dry cleaning; Dental Center; Two service stations; and O/G problem associated with housing/military messes. Discussion needs to identify impact on WWTP if any.

28. Page 43 indicates that the Bundy WWTP had three flow violations. This contradicts the statement on Page 39.

29. The Bundy WWTP is only operating at 8 % of design. This condition could cause significant problems associated with hydraulic underloading. The report needs to address this issue.

30. Section D on Page 55 summarizes deficiencies in the existing Bundy WWTP design. This data

is invalid based upon actual flow.

31. Page 39 indicates that the Capehart WWTP is currently operating at 80% of design capacity. This is not true. A recently installed new flow meter show a significant continuing ongoing flow problem. Previous data on flow monitoring records were estimates and thus invalid. Further investigation/discussion warranted by this study. Review the current ongoing study by R.E. Sarrierra which is considering diverting flow from Capehart WWTP to the Industrial WWTP.

32. A figure for each of the WWTPs should be include to show proposed flow diagram modifications.

33. Tables 7 through 9 should more accurately be entitled, "Industrial WWTP Monthly Flow Data, Capehart ..... and Bundy ....", respectively.

34. Table 10 for the Industrial WWTP Characterization have the following error under alkalinity for Site 5 (i.e. 117 (max) – 15 (min) should read in reverse 15 (min) – 117 (max)). Also, the mean results for BOD and

COD at Site 5 increased instead of decreasing. This indicates a problem which need addressing.

35. Table 12 on page 47 has an error under Site 4 for Fecal Coliform (i.e., 2,400-16,000 should read 2,400 - 24,000).

36. Organization of report needs to be improved. The study approach is not very easy to follow (e.g., Data review → Sampling collection/analysis → Existing plant operations → Alternative improvements evaluation → Recommended improvements → Best Selected Improvements / Project Costs) Trying to address these issues for all three (3) plants at the same time causes a loss in the train of thought. The author may want to consider following one scenario from begining to completion before switching to another.

F-285

SPECIAL PROJECT REQUEST
NAVFAC 11014/64 (REV. 8-74)
Supersedes NAVFAC 9-11014/64 (11-68)
S/N 0105-LF-003-4720

STEP TWO SUBMISSION

1. ACTIVITY SHOL NO.	ACTIVITY NAME AND LOCATION	DATE SUBMITTED
6029-665	U.S. NAVAL STATION, ROOSEVELT ROADS, PR	NOV 85

2. PROJECT NO.	TITLE
CR7-86	ALTER CAPEHART AREA SEWAGE TREATMENT PLANT

3. TYPE
a. [ ] MAINT./REPAIR b. [X] MINOR CONSTRUCTION/ ALTERATION c. [ ] AIR CONDITIONING [ ] EQUIPMENT INSTALLATION

4. DESCRIBE AND STATE FUNCTION OF FACILITY

The facility is the Capehart Area Sewage Plant which consists of sludge drying beds, lift stations, aeration tanks, settling tanks, aerobics sludge disgester tanks, clorine contact tanks, chlorination room, control room, and related appurtenances.

a. PROPERTY RECORD CARD NO. 2-02909
b. NAVY CATEGORY CODE 831-10
c. BLDG. OR STRUCTURE NO. 1691

5. WHAT IS THE EFFECT OF THIS PROJECT ON THE MISSION OF THE ACTIVITY?

This Station maintains and operates facilities and provides services and materials to support operations of aviation activities and units of the operating forces of the Navy and other activities and units. This project proposes the elimination of several pollution deficiencies and other problem areas within the Capehart Area Sewage Treatment Plant.

6. THE REQUIREMENT FOR THE FACILITY IS BASED ON:
a. [ ] A CHANGE IN MISSION b. [X] FULL-TIME CONTINUING NEED c. [ ] 3 TO 5 YEAR NEED d. [ ] LESS THAN 3 YEARS' NEED e. [ ] CURRENTLY REQUIRED LESS THAN 50% OF TIME f. [ ] RESERVED FOR FUTURE REQUIREMENTS

7a. EST. FUNDED COST	b. EST. PROJECT COST	c. EST. PLANNING COST	d. TOTAL FUNDS REQUESTED	e. EST. FACIL. REPL. COST
$ 240,000	$ 240,000	$ 3,000.000	$ 243,000	$ 807,137

8. DATE FACILITY CONSTRUCTED: 1970

9. IS FACILITY ON AN APPROVED BASIC FACILITY REQUIREMENTS LIST? If "NO," how was need determined? [X] YES [ ] NO

10. IS PROJECT LISTED ON ANNUAL INSPECTION SUMMARY? If answer is "NO," and AIS is applicable, explain exclusion.
[X] YES [ ] NO [ ] N.A.

11. DESCRIBE CONDITION TO BE CORRECTED, OR PROBLEM TO BE SOLVED WITH PROPOSED SOLUTION. Attach additional description if necessary. ONE PAGE ONLY.

Currently, the Capehart Area Sewage Treatment Plant is in need of several repair items and some new construction in order to bring it up to operating standards to comply with the pollution abatement program. (See continuation sheet)

12. WHY IS THE PROPOSED SOLUTION BEST – AND WHAT ALTERNATIVES WERE CONSIDERED?

There is no other feasible alternative

13. WERE ANY NON-NAVY EXPERTS INVITED TO REVIEW THIS PROBLEM AND THIS SOLUTION? Explain effort on solution.

a. [ ] YES b. [X] NO

14. HAS EFD DESIGN DIVISION REVIEWED SOLUTION? a. [ ] YES b. [X] NO

15. CAN ANOTHER FACILITY BE ECONOMICALLY ADAPTED FOR THIS FUNCTION? a. [ ] YES b. [X] NO

16. CAN PROJECT BE FUNDED IN PHASES? How? How many?
a. [ ] YES b. [X] NO

17. THIS PROJECT IS THE RESULT OF
a. [ ] INADEQUATE MAINTENANCE b. [X] FACILITY AGE c. [ ] DEFICIENT CONSTR. d. [ ] DEFICIENT DESIGN e. [ ] OTHER: _____

18. HAS THIS SPECIFIC PROBLEM BEEN CORRECTED PREVIOUSLY?
a. [ ] YES b. [X] NO When?

HOW LONG WILL PROPOSED CORRECTIVE ACTION LAST? 10 YEAR

PE

U.S. NAVAL STATION
ROOSEVELT ROADS, PR

NAVFAC 9-11014/64 (Continuation Sheet)
SPECIAL PROJECT: C7-86 ALTER CAPEHART AREA SEWAGE TREATMENT PLANT

Item 11 3 line description of condition.....

.....This project proposes the following works:

a. Site #1 - Flow Distribution Manhole

1) Replace ladder rungs (5 ea)

b. Site #2 - Sludge Drying Beds

1) Provide check valve (4" Ø) at main drainage to new lift station.

c. Site #3 - New Lift Station

1) Construct a three step metal ladder,
2) Replace electric motor of commutator and provide a new wiring system for same.
3) Replace ventilatior fan & provide new electric system for same.
4) Replace commutator blades.
5) Replace 36" W x 72" H hollow metal door with frame and hardware.

d. Site #4 - Old Lift Station

1) Construct a two step concrete stair.
2) Replace bar screen and grating.
3) Change exhaust hood.
4) Replace exhaust fan.
5) Replace roof access doors.
6) Upgrade electric system.
7) Repair electric pump control system.
8) Replace 40" wide x 72" hollow metal door w/frame and hardware.

e. Site #5 - New Aerator Tank

1) Replace 4 each air diffusing system manifolds and diffusers.
2) Repair safety handrails and toe boards.

f. Site #6 - Old Aerator Tank

1) Replace 4" Ø C.S. sludge line diffuser system.
2) Replace 4" Ø sludge recirculating valves with long, stem valves.
3) Repair safety handrails and a toe boards.
4) Replace 6 each air diffusing system manifolds and diffusers.
5) Replace main air line.

g. Site #7 - Aerobic Sludge Digestor

1) Replace 4 each, 2" Ø C.S. lines and diffusers.
2) Replace solenoid air valves system with an adjustable type solenoid system.
3) Replace 2 each 8" Ø sludge pipe hanger and bracket.
4) Eliminate sludge box.
5) Provide overflow pipe.

h. Site #8 - Old Aerobic Sludge Digestor

1) Replace 4 each, 2" Ø C.S. lines and diffusers.
2) Replace solenoid air valves system with an adjustable type solenoid system.

i. Site #9 - New Settling Tank

1) Correct filtration.
2) Replace sprockets & chain of tank conveyor system.
3) Provide catwalk and handrails.

j. Site #10 -Old Settling Tank.

1) Replace sprockets & chain of tank conveyor system.
2) Provide catwalk and handrails.

k. Site #11 - New Chlorine settling Tank

1) Provide galvanized steel grating.
2) Provide a new 4" Ø air line to tank (for cleaning purposes).
3) Provide back flow preventer for stand pipe.

l. Site #12 - Old Chlorine settling tank

1) Provide galvanized settling Tank.
2) Provide a new 4" Ø air linte to tank (for cleaning purposes).

m. Site #13 - Control Room

1) Replace hollow metal doors w/frame and hardware.
2) Repair air compressor.

n. Site #14- Overall Site Works

1) Replace flow meter system in both sections.
2) Provide Non Aerated Grit Chamber.
3) Provide two addtional stand pipes for cleaning purposes.
4) Provide a shower facility for operators.
5) Paint all structures and piping systems.

USED OIL AND SOLVENT (UO&S) RECYCLING MANAGEMENT PROGRAM

U.S. NAVAL STATION
ROOSEVELT ROADS, PUERTO RICO
UIC N00389

NEESA 19.1-032
DRAFT REPORT
JULY 1988

PREPARED BY:

JILL M. WANNER, PROJECT MANAGER
THOMAS E. GREEN, ENVIRONMENTAL ENGINEER

FACILITIES ENGINEERING DEPARTMENT
NAVAL ENERGY AND ENVIRONMENTAL SUPPORT ACTIVITY
PORT HUENEME, CA 93043-5014

4.2 ANTI-FREEZE (ETHYLENE GLYCOL) MANAGEMENT

Most activities generating anti-freeze drain it on the ground and do not drum it for treatment/disposal. Although the Environmental Protection Agency (EPA) does not currently regulate ethylene glycol as a hazardous waste, there are more environmentally sound methods of managing anti-freeze, including:

(1) Drumming the anti-freeze for treatment/disposal through DRMO

(2) Discharge of anti-freeze to the sanitary sewer.

The second option would result in the least cost to the Navy. However, a decision to discharge the anti-freeze to the sewer should be contingent on the results of an in-progress wastewater treatment plant study being performed by Hayes, Seay, Mattern and Mattern, Inc.

4.3 AIRCRAFT AND VEHICLE WASHRACK PROCESS CHANGES

Several shops, including VC-8, Hanger 200, and AIMD, clean aircraft and other equipment with the cleaning compound TURCO TYPE I which contains 30% solvent. The rinse water contaminated with TURCO flows to an oil-water separator which is designed to trap low density liquids, like oils and solvents. Unfortunately, the detergents in the cleaning compound create an emulsion making the solvent miscible with water, allowing the solvent to flow with the water out of the oil/water separator and to the wastewater treatment plant. Since the solvent is detrimental to the wastewater treatment plant, activities should discontinue the use of TURCO or any other cleaning compound containing solvent.

The following cleaning compounds, which do not contain any solvent, have been approved by NAVAIR and are currently in use at Marine Corps air stations and naval air stations.

1. Name: Aircraft Cleaning Compound
   Military Specification: MIL-C-43616C
   Stock Number: 6850-01-845-7931

2. Name: Octagon
   Military Specification: MIL-C-85570
   Stock Number: 6850-01-236-0128

(1)

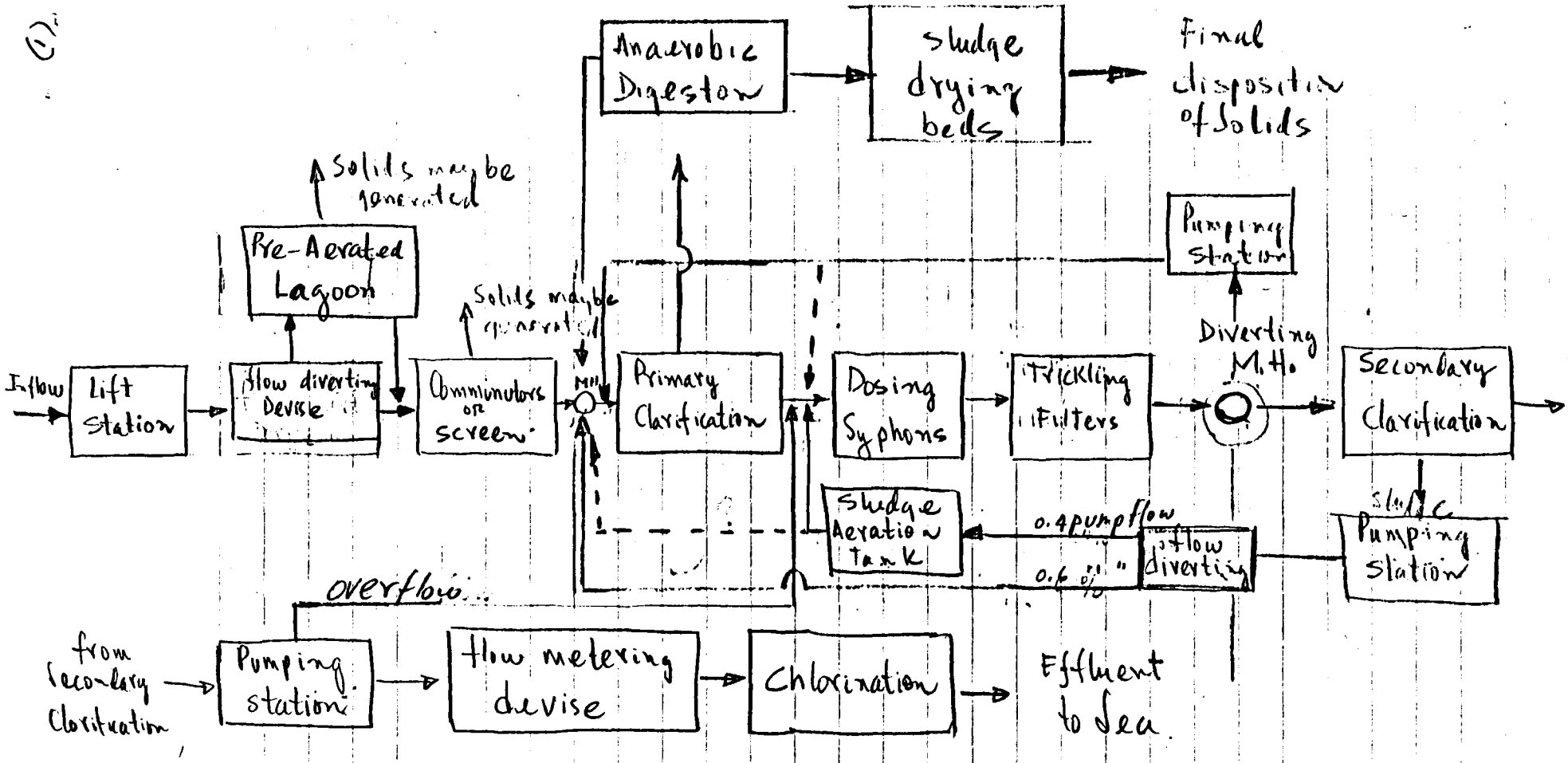

Industrial STP Process liquid flow diagram

" " " solid flow diagram

SUMMARY OF CONFERENCE
STUDY FOR ELIMINATION OF NPDES VIOLATIONS
U.S. NAVAL STATION, ROOSEVELT ROADS, P.R.
CONTRACT NO. N62470-87-C-9009
A&E COMMISSION NO. 1735A
2 DECEMBER 1988

LOCATION: Office of Assistant Public Works Officers
U.S. Naval Station, Roosevelt Roads, Puerto Rico

PRESENT FOR: Naval Station, Roosevelt (NAVSTA)

Lt. Commander Nelson
Felix Mestey
Egardo Ramos

Atlantic Division, Naval Facilities Engineering Command (LANTDIV)

Wallace Carter

Hayes, Seay, Mattern and Mattern, Inc. (HSMM)

Robert F. Canova

HSMM summarized the EQB conference of 1 December 1988, specifically:

1. EQB consideration of an extension to the compliance schedule to enable the trickling filter de-nitrification performance pilot study.

2. NPDES permit requirement that WTP performance achieve 85 percent removal of BOD_5 and total suspended solids and EQB consideration that the requirement be deleted from the NPDES permit.

3. Requirement that the Capehart WTP improvements consider the site limitation of the plant. The report will include an alternative to the Capehart WTP improvements of plant.

4. Improvements to the three WTP's will include improvements to increase the capacity of each plant unit process to the rated capacity of the plants.

5. The final engineering report will be delivered to EQB on 13 January 1989.

6. It was agreed that project cost estimates will be upgraded to FY92 construction and include engineering costs. It was agreed that the report will emphasize the importance of continuity of treatment performance during construction and quality control during construction.

7. LANTDIV will begin considering the construction process and packaging of the projects.

Prepared by:

Hayes, Seay, Mattern and Mattern, Inc.

Robert F. Canova

Robert F. Canova
Vice President, Civil Works

RFC/ros

APPENDIX 2

Tabulation of File G-6, May 1987 to April 1988,
Environmental Division, NAVSTA, Roosevelt Roads

Tabulation of Files G-7 and G-9,
November 1984 through April 1988,
Environmental Division, NAVSTA,
Roosevelt Roads

The enclosed data was tabulated from file G-6, property of the U.S. Navy, Roosevelt Roads, Ceiba, Puerto Rico, Department of Environmental Engineering (Public Works). The data covers 11 water quality parameters analyzed from the Capehart, Bundy, and Industrial Wastewater Treatment Plants, located at Roosevelt Roads, from May 1987 through April 1988. The following firms contracted by the Navy performed the enclosed analyses:

Environmental Quality Laboratories, Inc.
Box 11458
San Turce, Puerto Rico 00910-1458

The Bionetics Corporation Analytical Laboratories
20 Research Drive
Hampton, Virginia 23666

Acualab de Puerto Rico
Apartado 625
Humacao, Puerto Rico 00611

INDUSTRIAL WTP

E - FINAL EFFLUENT
I - INFLUENT (RAW)
ST - SECONDARY TREATMENT PRE-CHLORINATION

SHEET # 1

DATE	BOD MG/L	COD MG/L	TSS MG/L	OIL & GREASE MG/L	PH	FECAL COLIFORM MPN/100ML	CHLORINE RESIDUAL MG/L	TEMP °C	AMMONIA MG/L	NITRITE MG/L	NITRATES MG/L	SITE
5/31/88	-	-	-	<1	-	20	0.3	-	-	-	-	E
5/23/88	-	-	-	1	-	-	-	-	2.2	0.36	12.6	E
6/30/88	-	-	-	-	-	>24000	0.3	24	-	-	-	E
6/28/88	-	-	-	-	-	9200	0.2	27	-	-	-	E
6/27/88	-	-	-	-	-	<20	0.6	25	-	-	-	E
6/24/88	-	-	-	-	-	<20	0.65	25	-	-	-	E
6/20/88	-	-	-	-	-	700	0.3	28	-	-	-	E
6/17/88	-	-	-	-	-	80	0.3	-	-	-	-	E
6/14/88	150	277	114	-	-	-	-	-	-	-	-	I
6/14/88	19	38.4	25	-	-	-	-	-	-	-	-	E
6/13/88	-	-	-	-	-	20	0.5	-	-	-	-	E
6/10/88	-	-	-	-	-	<20	0.8	-	-	-	-	E

INDUSTRIAL WTP

E - FINAL EFFLUENT
I - INFLUENT (RAW)
ST - SECONDARY TREATMENT PRE-CHLORINATION

SHEET # 2

DATE	BOD MG/L	COD MG/L	TSS MG/L	OIL & GREASE MG/L	PH	FECAL COLIFORM MPN/100ML	CHLORINE RESIDUAL MG/L	TEMP °C	AMMONIA MG/L	NITRITE MG/L	NITRATES MG/L	SITE
6/8/88	-	-	-	-	-	16000	0.1	-	-	-	-	E
6/16/88	-	-	-	9	-	-	-	-	1.2	0.18	5.12	E
6/30/88	-	-	-	<1	-	8900	-	-	-	-	-	E
7/26/88	-	-	-	-	-	600	-	-	-	-	-	E
8/1/88	15	153	38	-	-	3000	-	-	-	-	-	I
7/18/88	32	58	19	-	-	-	-	-	-	-	-	E
7/18/88	189	256	90	-	-	-	-	-	-	-	-	E
7/29/88	-	-	-	-	-	300	-	-	-	-	-	E
5/5/88	-	-	-	-	-	9200	0.3	-	-	-	-	E
4/28/88	-	-	-	<1	-	-	-	-	-	-	-	ST
4/7/88	-	-	-	-	-	1300	0.50	-	-	-	-	E

INDUSTRIAL WTP

E - FINAL EFFLUENT
I - INFLUENT (RAW)
ST - SECONDARY TREATMENT PRE-CHLORINATION

SHEET # 3

DATE	BOD MG/L	COD MG/L	TSS MG/L	OIL & GREASE MG/L	PH	FECAL COLIFORM MPN/100ML	CHLORINE RESIDUAL MG/L	TEMP °C	AMMONIA MG/L	NITRITE MG/L	NITRATES MG/L	SITE
4/21/88	-	-	-	-	-	170	0.7	-	-	-	-	E
4/18/88	-	-	-	2	-	-	-	-	5.32	1.2	3.3	ST
5/26/88	20.8	5.30	37	-	-	<20	0.3	-	-	-	-	E
5/26/88	120	388	52	-	-	-	-	-	-	-	-	I
5/12/88	-	-	-	-	-	<20	-	-	-	-	-	E
5/9/88	-	-	-	-	-	<20	-	-	-	-	-	E
5/23/88	-	-	-	-	-	20	0.7	-	-	-	-	E
5/17/88	-	-	-	-	-	<20	0.6	-	-	-	-	E
5/19/88	-	-	-	-	-	<20	-	-	-	-	-	E
4/27/88	-	-	-	-	-	<20	-	-	-	-	-	E
4/25/88	-	-	-	-	-	220	0.65	-	-	-	-	E

INDUSTRIAL WTP

E - FINAL EFFLUENT
I - INFLUENT (RAW)
ST - SECONDARY TREATMENT PRE-CHLORINATION

SHEET # 4

DATE	BOD MG/L	COD MG/L	TSS MG/L	OIL & GREASE MG/L	PH	FECAL COLIFORM MPN/100ML	CHLORINE RESIDUAL MG/L	TEMP °C	AMMONIA MG/L	NITRITE MG/L	NITRATES MG/L	SITE
4/18/88	-	-	-	-	-	>24000 =	0.3	-	-	-	-	E
4/14/88	-	-	-	-	-	20	1.8	-	-	-	-	E
4/12/88	109	432	68	-	-	-	-	-	-	-	-	UNIDENTIFIED MANHOLE
4/12/88	23	47.3	16	-	-	-	-	-	-	-	-	PIT
4/11/88	-	-	-	-	-	50	0.3	-	-	-	-	E
4/5/88	-	-	-	-	-	460	-	-	-	-	-	E
3/29/88	-	-	-	-	-	<20	0.45	-	-	-	-	E
3/28/88	-	-	-	-	-	700	0.37	-	-	-	-	E
3/29/88	150	345	69	-	-	-	-	-	-	-	-	I
3/29/88	39.6	50.2	19	-	-	-	-	-	-	-	-	ST

INDUSTRIAL WTP

E - FINAL EFFLUENT
I - INFLUENT (RAW)
ST - SECONDARY TREATMENT PRE-CHLORINATION

SHEET # 5

DATE	BOD MG/L	COD MG/L	TSS MG/L	OIL & GREASE MG/L	PH	FECAL COLIFORM MPN/100ML	CHLORINE RESIDUAL MG/L	TEMP °C	AMMONIA MG/L	NITRITE MG/L	NITRATES MG/L	SITE
3/7/88	-	-	-	-	-	<20	-	-	-	-	-	E
3/29/88	-	-	-	-	-	700	0.17	-	-	-	-	E
3/28/88	-	-	-	-	-	700	0.37	-	-	-	-	E
3/30/88	-	-	-	<1	-	-	-	-	-	-	-	ST
3/24/88	-	-	-	-	-	2200	0.4	-	-	-	-	E
3/21/88	-	-	-	-	-	50	-	-	-	-	-	E
3/8/88	-	-	-	<1	-	-	-	-	0.35	0.20	8.8	ST
3/17/88	-	-	-	-	-	260	-	-	-	-	-	E
3/14/88	-	-	-	-	-	330	-	-	-	-	-	E
3/9/88	-	-	-	-	-	790	-	-	-	-	-	E
3/8/88	57.6	201	100	-	-	-	-	-	-	-	-	I TO COMMUNITOR

INDUSTRIAL WTP

E - FINAL EFFLUENT
I - INFLUENT (RAW)
ST - SECONDARY TREATMENT PRE-CHLORINATION

SHEET # 6

DATE	BOD MG/L	COD MG/L	TSS MG/L	OIL & GREASE MG/L	PH	FECAL COLIFORM MPN/100ML	CHLORINE RESIDUAL MG/L	TEMP °C	AMMONIA MG/L	NITRITE MG/L	NITRATES MG/L	SITE
3/8/88	12.5	32.1	20	-	-	-	-	-	-	-	-	ST
3/8/88	57.6	201	58	-	-	-	-	-	-	-	-	I
3/8/88	12.5	32.1	20	-	-	-	-	-	-	-	-	PIT
3/7/88	-	-	-	-	-	<20	-	-	-	-	-	E
3/3/88	-	-	-	-	-	>24000 =	-	-	-	-	-	E
2/29/88	-	-	-	2	-	-	-	-	0.28	0.1	9.24	ST
2/23/88	55.7	97	100	-	-	-	-	-	-	-	-	I TO COMMUNITOR
2/23/88	20	61.2	33	-	-	-	-	-	-	-	-	ST
2/23/88	54.7	97	100	-	-	-	-	-	-	-	-	I
2/23/88	20.0	61.2	33.0	-	-	-	-	-	-	-	-	PIT

INDUSTRIAL WTP

E - FINAL EFFLUENT
I - INFLUENT (RAW)
ST - SECONDARY TREATMENT PRE-CHLORINATION

SHEET # 7

DATE	BOD MG/L	COD MG/L	TSS MG/L	OIL & GREASE MG/L	PH	FECAL COLIFORM MPN/100ML	CHLORINE RESIDUAL MG/L	TEMP °C	AMMONIA MG/L	NITRITE MG/L	NITRATES MG/L	SITE
2/23/88	-	-	-	-	-	140	-	-	-	-	-	E
2/25/88	-	-	-	-	-	<20	-	-	-	-	-	E
2/26/88	-	-	-	-	-	<20	-	-	-	-	-	E
3/29/88	-	-	-	-	-	<20	-	-	-	-	-	E
2/18/88	-	-	-	-	-	<20	-	-	-	-	-	E
2/4/88	-	-	-	5	-	-	-	-	-	-	-	ST
1/21/88	-	-	-	<1	-	-	-	-	-	-	-	ST
1/13/88	-	-	-	8	-	-	-	-	0.80	0.19	2.9	ST
12/17/87	-	-	-	3	-	-	-	-	-	-	-	ST
12/3/87	-	-	-	7	-	-	-	-	0.17	0.20	2.9	ST
11/12/87	-	-	-	8	-	-	-	-	0.5	0.19	7.21	ST
11/2/87	-	-	-	-	7.15	790	0.3	-	-	-	-	E

INDUSTRIAL WTP

E - FINAL EFFLUENT
I - INFLUENT (RAW)
ST - SECONDARY TREATMENT PRE-CHLORINATION

SHEET # 8

DATE	BOD MG/L	COD MG/L	TSS MG/L	OIL & GREASE MG/L	PH	FECAL COLIFORM MPN/100ML	CHLORINE RESIDUAL MG/L	TEMP °C	AMMONIA MG/L	NITRITE MG/L	NITRATES MG/L	SITE
11/6/87	-	-	-	-	7.15	1100	0.6	-	-	-	-	E
11/12/87	-	-	-	-	7.15	2200	0.3	-	-	-	-	E
11/20/87	-	-	-	-	7.10	490	0.6	-	-	-	-	E
11/16/87	-	-	-	-	7.15	2	1.7	-	-	-	-	E
10/21/87	-	-	-	14	-	-	-	-	-	-	-	ST
10/7/87	-	-	-	11	-	-	-	-	0.49	1.2	1.7	ST
9/23/87	-	-	-	<1	-	-	-	-	-	-	-	ST
9/14/87	-	-	-	<1	-	-	-	-	0.72	0.4	5.72	ST
8/10/87	-	-	-	-	7.2	<20	0.5	-	-	-	-	E
8/3/87	-	-	-	-	7.3	7400	0.3	-	-	-	-	E
8/5/87	-	-	-	-	7.33	7900	0.2	-	-	-	-	E

INDUSTRIAL WTP

E - FINAL EFFLUENT
I - INFLUENT (RAW)
ST - SECONDARY TREATMENT PRE-CHLORINATION

SHEET # 9

DATE	BOD MG/L	COD MG/L	TSS MG/L	OIL & GREASE MG/L	PH	FECAL COLIFORM MPN/100ML	CHLORINE RESIDUAL MG/L	TEMP °C	AMMONIA MG/L	NITRITE MG/L	NITRATES MG/L	SITE
8/17/87	-	-	-	-	-	700	0.3	-	-	-	-	E
8/21/87	-	-	-	-	7.4	130	0.3	-	-	-	-	E
8/26/87	-	-	-	-	7.25	49	0.3	-	-	-	-	E
8/13/87	-	-	-	<1	-	-	-	-	0.4	0.07	8.9	ST
8/26/87	-	-	-	2	-	-	-	-	-	-	-	ST
7/13/87	-	-	-	5	-	-	-	-	0.21	<0.01	7.03	ST
7/22/87	-	-	-	-	7.2	11000	0.8	-	-	-	-	E
7/27/87	-	-	-	-	7.15	1400	0.5	-	-	-	-	E
7/29/87	-	-	-	-	7.25	1400	0.3	-	-	-	-	E
7/20/87	-	-	-	-	7.55	2200	0.3	-	-	-	-	E
6/24/87	-	-	-	1	-	-	-	-	-	-	-	ST
6/17/87	-	-	-	1	-	-	-	-	<0.05	0.33	2.24	ST

INDUSTRIAL WTP

E - FINAL EFFLUENT
I - INFLUENT (RAW)
ST - SECONDARY TREATMENT PRE-CHLORINATION

SHEET # 10

DATE	BOD MG/L	COD MG/L	TSS MG/L	OIL & GREASE MG/L	PH	FECAL COLIFORM MPN/100ML	CHLORINE RESIDUAL MG/L	TEMP °C	AMMONIA MG/L	NITRITE MG/L	NITRATES MG/L	SITE
5/19/87	-	-	-	1	-	-	-	-	-	-	-	ST
5/5/87	-	-	-	1	-	-	-	-	0.77	0.85	6.72	ST

CAPEHART WTP

E - FINAL EFFLUENT
I - INFLUENT (RAW)
ST - SECONDARY TREATMENT
PRE-CHLORINATION

SHEET # 1

PARAMETERS

DATE	BOD MG /L	COD MG/L	TSS MG/L	OIL & GREASE MG/L	PH	FECAL COLIFORM MPN/100ML	CHLORINE RESIDUAL MG/L	TEMP °C	AMMONIA MG/L	NITRITE MG/L	NITRATES MG/L	SITE
5/31/88	-	-	-	<1	-	2800	0.2	-	-	-	-	E
5/23/88	-	-	-	1	-	-	-	-	0.07	0.02	9.78	E
6/30/88	-	-	-	-	-	20	0.35	26	-	-	-	E
6/28/88	-	-	-	-	-	20	0.30	26	-	-	-	E
6/27/88	-	-	-	-	-	>24000 =	0.10	25	-	-	-	E
6/24/88	-	-	-	-	-	<20	0.70	26	-	-	-	E
6/21/88	78	201	132	-	-	-	-	-	-	-	-	E
6/21/88	5.2	25.6	11	-	-	-	-	-	-	-	-	E
6/20/88	-	-	-	-	-	195	0.5	28	-	-	-	E
6/17/88	-	-	-	-	-	50	0.7	-	-	-	-	E
6/13/88	-	-	-	-	-	80	0.3	-	-	-	-	E

CAPEHART WTP

E - FINAL EFFLUENT
I - INFLUENT (RAW)
ST - SECONDARY TREATMENT PRE-CHLORINATION

SHEET # 2

PARAMETERS

DATE	BOD MG /L	COD MG/L	TSS MG/L	OIL & GREASE MG/L	PH	FECAL COLIFORM MPN/100ML	CHLORINE RESIDUAL MG/L	TEMP °C	AMMONIA MG/L	NITRITE MG/L	NITRATES MG/L	SITE
6/10/88	-	-	-	-	-	3500	0.3	-	-	-	-	E
6/8/88	-	-	-	-	-	330	0.2	-	-	-	-	E
6/16/88	-	-	-	8	-	-	-	-	-	-	-	E
6/30/88	-	-	-	<1	-	-	-	-	0.31	<0.01	9	E
7/26/88	3750	11900	66	-	-	-	-	-	-	-	-	I
8/1/88	-	-	-	-	-	300	-	-	-	-	-	E
7/29/88	-	-	-	-	-	100	-	-	-	-	-	E
7/26/88	3550	4200	6	-	-	900	-	-	-	-	-	E
7/22/88	-	-	-	-	-	1000	-	-	-	-	-	E
7/22/88	-	-	-	-	-	1200	-	-	-	-	-	E
8/1/88	66	168	74	-	-	-	-	-	-	-	-	I

CAPEHART WTP

E - FINAL EFFLUENT
I - INFLUENT (RAW)
ST - SECONDARY TREATMENT PRE-CHLORINATION

SHEET # 3

PARAMETERS

DATE	BOD MG /L	COD MG/L	TSS MG/L	OIL & GREASE MG/L	PH	FECAL COLIFORM MPN/100ML	CHLORINE RESIDUAL MG/L	TEMP °C	AMMONIA MG/L	NITRITE MG/L	NITRATES MG/L	SITE
8/5/88	-	-	-	-	-	0	-	-	-	-	-	E
5/5/88	-	-	-	-	-	<20	0.5	-	-	-	-	E
4/15/88	317	674	134	-	-	-	-	-	-	-	-	I
4/15/88	125	226	14	-	-	-	-	-	-	-	-	ST
4/28/88	-	-	-	1	-	-	-	-	-	-	-	ST
4/7/88	-	-	-	-	-	3500	0.42	-	-	-	-	E
4/21/88	-	-	-	-	-	170	0.7	-	-	-	-	E
4/18/88	-	-	-	<1	-	-	-	-	0.84	0.08	4.32	ST
5/26/88	192	479	64	-	-	-	-	-	-	-	-	I
5/26/88	8.3	47.3	57	-	-	<20	0.5	-	-	-	-	E

CAPEHART WTP

E - FINAL EFFLUENT
I - INFLUENT (RAW)
ST - SECONDARY TREATMENT PRE-CHLORINATION

SHEET # 4

PARAMETERS

DATE	BOD MG /L	COD MG/L	TSS MG/L	OIL & GREASE MG/L	PH	FECAL COLIFORM MPN/100ML	CHLORINE RESIDUAL MG/L	TEMP °C	AMMONIA MG/L	NITRITE MG/L	NITRATES MG/L	SITE
5/12/88	-	-	-	-	-	130	-	-	-	-	-	E
5/9/88	-	-	-	-	-	1100	-	-	-	-	-	E
5/23/88	-	-	-	-	-	1300	0.2	-	-	-	-	E
4/27/88	-	-	-	-	-	<20	0.7	-	-	-	-	E
4/25/88	-	-	-	-	-	20	0.6	-	-	-	-	E
4/18/88	-	-	-	-	-	>24000 =	0.3	-	-	-	-	E
4/14/88	-	-	-	-	-	130	1.0	-	-	-	-	E
4/11/88	-	-	-	-	-	<20	0.5	-	-	-	-	E
4/5/88	-	-	-	-	-	<20	0.57	-	-	-	-	E
3/29/88	-	-	-	-	-	700	0.17	-	-	-	-	E

CAPEHART WTP

E - FINAL EFFLUENT
I - INFLUENT (RAW)
ST - SECONDARY TREATMENT PRE-CHLORINATION

SHEET # 5

PARAMETERS

DATE	BOD MG /L	COD MG/L	TSS MG/L	OIL & GREASE MG/L	PH	FECAL COLIFORM MPN/100ML	CHLORINE RESIDUAL MG/L	TEMP °C	AMMONIA MG/L	NITRITE MG/L	NITRATES MG/L	SITE
3/28/88	-	-	-	-	-	<20	0.54	-	-	-	-	E
3/7/88	-	-	-	-	-	330	-	-	-	-	-	E
3/29/88	-	-	-	-	-	<20	0.45	-	-	-	-	E
3/28/88	-	-	-	-	-	<20	0.45	-	-	-	-	E
3/30/88	-	-	-	<1	-	-	-	-	-	-	-	ST
3/24/88	-	-	-	-	-	700	0.3	-	-	-	-	E
3/21/88	-	-	-	-	-	330	-	-	-	-	-	E
3/8/88	-	-	-	<1	-	-	-	-	0.38	0.2	11	ST
3/17/88	-	-	-	-	-	790	-	-	-	-	-	E
3/14/88	-	-	-	-	-	5400	-	-	-	-	-	E
3/9/88	-	-	-	-	-	110	-	-	-	-	-	E

CAPEHART WTP

E - FINAL EFFLUENT
I - INFLUENT (RAW)
ST - SECONDARY TREATMENT PRE-CHLORINATION

SHEET # 6

PARAMETERS

DATE	BOD MG /L	COD MG/L	TSS MG/L	OIL & GREASE MG/L	PH	FECAL COLIFORM MPN/100ML	CHLORINE RESIDUAL MG/L	TEMP °C	AMMONIA MG/L	NITRITE MG/L	NITRATES MG/L	SITE
3/7/88	-	-	-	-	-	330	-	-	-	-	-	E
3/3/88	-	-	-	-	-	790	-	-	-	-	-	E
3/3/88	555	1077	1444	-	-	-	-	-	-	-	-	I
3/3/88	28.6	28.9	<5	-	-	-	-	-	-	-	-	E FROM CLARIFIERS
2/29/88	-	-	-	2	-	-	-	-	0.94	0.28	8.97	ST
2/29/88	108	374	136	-	-	-	-	-	-	-	-	I
2/29/88	16.4	31.0	11.7	-	-	-	-	-	-	-	-	E FROM CLARIFIERS
2/29/88	-	-	-	-	-	50	-	-	-	-	-	E
2/23/88	-	-	-	-	-	230	-	-	-	-	-	E
2/25/88	-	-	-	-	-	<20	-	-	-	-	-	E

CAPEHART WTP

E - FINAL EFFLUENT
I - INFLUENT (RAW)
ST - SECONDARY TREATMENT PRE-CHLORINATION

SHEET # 7

PARAMETERS

DATE	BOD MG /L	COD MG/L	TSS MG/L	OIL & GREASE MG/L	PH	FECAL COLIFORM MPN/100ML	CHLORINE RESIDUAL MG/L	TEMP °C	AMMONIA MG/L	NITRITE MG/L	NITRATES MG/L	SITE
2/26/88	-	-	-	-	-	230	-	-	-	-	-	E
2/18/88	-	-	-	-	-	2400	-	-	-	-	-	E
2/4/88	-	-	-	3	-	-	-	-	-	-	-	ST
1/21/88	-	-	-	<1	-	-	-	-	-	-	-	ST
1/13/88	-	-	-	4	-	-	-	-	0.23	0.05	5.6	ST
12/17/87	-	-	-	2	-	-	-	-	-	-	-	ST
12/3/87	-	-	-	4	-	-	-	-	4.5	0.01	0.47	ST
11/12/87	-	-	-	1	-	-	-	-	0.34	0.09	11.1	I
11/2/87	-	-	-	-	6.95	940	0.3	-	-	-	-	E
11/6/87	-	-	-	-	7.05	2800	0.5	-	-	-	-	E
11/12/87	-	-	-	-	6.80	1800	0.5	-	-	-	-	E

CAPEHART WTP

E - FINAL EFFLUENT
I - INFLUENT (RAW)
ST - SECONDARY TREATMENT PRE-CHLORINATION

SHEET # 8

PARAMETERS

DATE	BOD MG /L	COD MG/L	TSS MG/L	OIL & GREASE MG/L	PH	FECAL COLIFORM MPN/100ML	CHLORINE RESIDUAL MG/L	TEMP °C	AMMONIA MG/L	NITRITE MG/L	NITRATES MG/L	SITE
11/20/87	-	-	-	-	6.7	790	0.5	-	-	-	-	E
11/16/87	-	-	-	-	7.0	140	0.4	-	-	-	-	E
10/21/87	-	-	-	1	-	-	-	-	-	-	-	ST
10/7/87	-	-	-	2	-	-	-	-	3.5	0.7	2.3	ST
9/23/87	-	-	-	<1	-	-	-	-	-	-	-	ST
9/14/87	-	-	-	<1	-	-	-	-	0.37	0.22	2.78	ST
8/10/87	-	-	-	-	7.05	24000	0.2	-	-	-	-	E
8/3/87	-	-	-	-	7.10	27000	1.0	-	-	-	-	E
8/5/87	-	-	-	-	7.15	2200	0.1	-	-	-	-	E
8/17/87	-	-	-	-	-	24000	0.1	-	-	-	-	E
8/21/87	-	-	-	-	7.05	240,000	0.5	-	-	-	-	E

CAPEHART WTP

E - FINAL EFFLUENT
I - INFLUENT (RAW)
ST - SECONDARY TREATMENT PRE-CHLORINATION

SHEET # 9

PARAMETERS

DATE	BOD MG /L	COD MG/L	TSS MG/L	OIL & GREASE MG/L	PH	FECAL COLIFORM MPN/100ML	CHLORINE RESIDUAL MG/L	TEMP °C	AMMONIA MG/L	NITRITE MG/L	NITRATES MG/L	SITE
8/26/87	-	-	-	-	7.10	7.90	0.9	-	-	-	-	E
8/14/87	-	-	-	<1	-	-	-	-	4	0.7	2.2	ST
8/26/87	-	-	-	3	-	-	-	-	-	-	-	ST
7/23/87	-	-	-	<1	-	-	-	-	-	-	-	ST
7/13/87	-	-	-	4	-	-	-	-	1.27	0.10	5.28	ST
7/22/87	-	-	-	-	7.25	7900	0.5	-	-	-	-	E
7/27/87	-	-	-	-	6.95	2800	0.3	-	-	-	-	E
7/29/87	-	-	-	-	7.05	940	0.2	-	-	-	-	E
7/29/87	-	-	-	-	7.15	1700	1.0	-	-	-	-	E
6/24/87	-	-	-	<1	-	-	-	-	-	-	-	ST
6/17/87	-	-	-	8	-	-	-	-	2.56	0.58	1.80	ST

CAPEHART WTP

E - FINAL EFFLUENT
I - INFLUENT (RAW)
ST - SECONDARY TREATMENT PRE-CHLORINATION

SHEET # 10

PARAMETERS

DATE	BOD MG /L	COD MG/L	TSS MG/L	OIL & GREASE MG/L	PH	FECAL COLIFORM MPN/100ML	CHLORINE RESIDUAL MG/L	TEMP °C	AMMONIA MG/L	NITRITE MG/L	NITRATES MG/L	SITE
5/19/87	-	-	-	1	-	-	-	-	-	-	-	ST
5/5/87	-	-	-	1	-	-	-	-	2.63	<0.05	1.25	ST
5/17/88	-	-	-	-	-	490	0.2	-	-	-	-	E
5/19/88	-	-	-	-	-	490	-	-	-	-	-	E

BUNDY WTP

E - FINAL EFFLUENT
I - INFLUENT (RAW)
ST - SECONDARY TREATMENT
PRE-CHLORINATION

SHEET # 1

DATE	BOD MG/L	COD MG/L	TSS MG/L	OIL & GREASE MG/L	PH	FECAL COLIFORM MPN/100ML	CHLORINE RESIDUAL MG/L	TEMP °C	AMMONIA MG/L	NITRITE MG/L	NITRATES MG/L	SITE
5/31/88	-	-	-	-	-	<20	2.0	-	-	-	-	E
5/23/88	-	-	-	<1	-	-	-	-	0.63	0.17	21.8	E
5/31/88	-	-	-	<1	-	-	-	-	-	-	-	E
6/30/88	-	-	-	-	<20	0.5	24	-	-	-	-	E
6/28/88	-	-	-	-	230	0.3	25.6	-	-	-	-	E
6/27/88	-	-	-	-	20	0.7	23	-	-	-	-	E
6/24/88	-	-	-	-	90	0.3	23	-	-	-	-	E
6/20/88	-	-	-	-	50	0.3	25	-	-	-	-	E
6/17/88	-	-	-	-	460	0.4	-	-	-	-	-	E
6/14/88	126	317	126	-	-	-	-	-	-	-	-	I
6/14/88	7.6	10	7	-	-	-	-	-	-	-	-	E

BUNDY WTP

E - FINAL EFFLUENT
I - INFLUENT (RAW)
ST - SECONDARY TREATMENT
PRE-CHLORINATION

SHEET # 2

DATE	BOD MG/L	COD MG/L	TSS MG/L	OIL & GREASE MG/L	PH	FECAL COLIFORM MPN/100ML	CHLORINE RESIDUAL MG/L	TEMP °C	AMMONIA MG/L	NITRITE MG/L	NITRATES MG/L	SITE
6/14/88	7.6	10	7	-	-	-	-	-	-	-	-	E
6/13/88	-	-	-	-	-	<20	0.5	-	-	-	-	E
6/10/88	-	-	-	-	-	<20	0.43	-	-	-	-	E
6/8/88	-	-	-	-	-	20	0.23	-	-	-	-	E
6/16/88	-	-	-	7	-	-	-	-	-	-	-	E
6/30/88	-	-	-	<1	-	-	-	-	0.41	0.05	17.9	E
7/26/88	-	-	-	-	-	2400	-	-	-	-	-	E
8/1/88	-	-	-	-	-	100	-	-	-	-	-	E
7/29/88	-	-	-	-	-	0	-	-	-	-	-	E
7/18/88	43	53	10	-	-	-	-	-	-	-	-	E
7/22/88	-	-	-	-	-	1500	-	-	-	-	-	E

BUNDY WTP

E - FINAL EFFLUENT
I - INFLUENT (RAW)
ST - SECONDARY TREATMENT PRE-CHLORINATION

SHEET # 3

DATE	BOD MG/L	COD MG/L	TSS MG/L	OIL & GREASE MG/L	PH	FECAL COLIFORM MPN/100ML	CHLORINE RESIDUAL MG/L	TEMP °C	AMMONIA MG/L	NITRITE MG/L	NITRATES MG/L	SITE
8/5/88	-	-	-	-	-	0	-	-	-	-	-	E
5/5/88	-	-	-	-	-	140	0.5	-	-	-	-	E
4/28/88	-	-	-	2	-	-	-	-	-	-	-	ST
4/14/88	310	798	602	-	-	-	-	-	-	-	-	I
4/14/88	7.1	18.7	9	-	-	-	-	-	-	-	-	E CLARIFIER CHANNEL
4/7/88	-	-	-	-	-	5400	0.36	-	-	-	-	E
4/21/88	-	-	-	-	-	<20	0.3	-	-	-	-	E
4/18/88	-	-	-	<1	-	-	-	-	0.34	0.40	16.6	ST
5/26/88	42	165	166	-	-	-	-	-	-	-	-	I
5/26/88	6.8	66.3	154	-	-	330	0.2	-	-	-	-	E

BUNDY WTP

E - FINAL EFFLUENT
I - INFLUENT (RAW)
ST - SECONDARY TREATMENT
PRE-CHLORINATION

SHEET # 4

DATE	BOD MG/L	COD MG/L	TSS MG/L	OIL & GREASE MG/L	PH	FECAL COLIFORM MPN/100ML	CHLORINE RESIDUAL MG/L	TEMP °C	AMMONIA MG/L	NITRITE MG/L	NITRATES MG/L	SITE
5/12/88	-	-	-	-	-	140	-	-	-	-	-	E
5/9/80	-	-	-	-	-	80	-	-	-	-	-	E
5/23/88	-	-	-	-	-	<20	0.5	-	-	-	-	E
4/27/88	-	-	-	-	-	<20	0.45	-	-	-	-	E
4/25/88	-	-	-	-	-	<20	1.24	-	-	-	-	E
4/18/88	-	-	-	-	-	20	0.4	-	-	-	-	E
4/14/88	-	-	-	-	-	490	0.7	-	-	-	-	E
4/11/88	-	-	-	-	-	<20	0.4	-	-	-	-	E
4/5/88	-	-	-	-	-	50	-	-	-	-	-	E
3/29/88	-	-	-	-	-	2800	0.18	-	-	-	-	E
3/28/88	-	-	-	-	7	5400	0.36	24	-	-	-	E

BUNDY WTP

E - FINAL EFFLUENT
I - INFLUENT (RAW)
ST - SECONDARY TREATMENT PRE-CHLORINATION

SHEET # 5

DATE	BOD MG/L	COD MG/L	TSS MG/L	OIL & GREASE MG/L	PH	FECAL COLIFORM MPN/100ML	CHLORINE RESIDUAL MG/L	TEMP °C	AMMONIA MG/L	NITRITE MG/L	NITRATES MG/L	SITE
3/7/88	-	-	-	-	-	50	-	-	-	-	-	E
3/29/88	-	-	-	-	-	2800	0.18	-	-	-	-	E
3/28/88	-	-	-	-	7	5400	0.36	24	-	-	-	E
3/30/88	-	-	-	<1	-	-	-	-	-	-	-	ST
3/24/88	-	-	-	-	-	20	0.4	-	-	-	-	E
3/21/88	-	-	-	-	-	<20	-	-	-	-	-	E
3/8/88	-	-	-	<1	-	-	-	-	1.2	0.2	14	ST
3/17/88	-	-	-	-	-	20	-	-	-	-	-	E
3/14/88	-	-	-	-	-	20	-	-	-	-	-	E
3/9/88	17.8	25.6	<5	-	-	-	-	-	-	-	-	E AT CLARIFIER
3/9/88	735	4700	3280	-	-	-	-	-	-	-	-	I

BUNDY WTP

E - FINAL EFFLUENT
I - INFLUENT (RAW)
ST - SECONDARY TREATMENT PRE-CHLORINATION

SHEET # 6

DATE	BOD MG/L	COD MG/L	TSS MG/L	OIL & GREASE MG/L	PH	FECAL COLIFORM MPN/100ML	CHLORINE RESIDUAL MG/L	TEMP °C	AMMONIA MG/L	NITRITE MG/L	NITRATES MG/L	SITE
3/9/88	-	-	-	-	-	<20	-	-	-	-	-	E
3/7/88	-	-	-	-	-	50	-	-	-	-	-	E
3/3/88	-	-	-	-	-	<20	-	-	-	-	-	E
2/29/88	-	-	-	<1	-	-	-	-	0.32	0.08	11.2	ST
2/22/88	-	-	-	-	-	>24000 =	-	-	-	-	-	E
2/25/88	176	402	208	-	-	-	-	-	-	-	-	I
2/25/88	9.9	32.1	8.0	-	-	-	-	-	-	-	-	E AT CLARIFIER
2/23/83	-	-	-	-	-	20	-	-	-	-	-	E
2/25/88	-	-	-	-	-	700	-	-	-	-	-	E
2/26/88	-	-	-	-	-	<20	-	-	-	-	-	E

BUNDY WTP

E - FINAL EFFLUENT
I - INFLUENT (RAW)
ST - SECONDARY TREATMENT PRE-CHLORINATION

SHEET # 7

DATE	BOD MG/L	COD MG/L	TSS MG/L	OIL & GREASE MG/L	PH	FECAL COLIFORM MPN/100ML	CHLORINE RESIDUAL MG/L	TEMP °C	AMMONIA MG/L	NITRITE MG/L	NITRATES MG/L	SITE
2/29/88	-	-	-	-	-	<20	-	-	-	-	-	E
2/4/88	-	-	-	2	-	-	-	-	-	-	-	ST
1/21/88	-	-	-	<1	-	-	-	-	-	-	-	ST
1/13/88	-	-	-	15	-	-	-	-	0.39	0.09	5.7	ST
12/17/87	-	-	-	2	-	-	-	-	-	-	-	ST
12/3/87	-	-	-	10	-	-	-	-	0.16	0.05	7.5	ST
11/12/87	-	-	-	4	-	-	-	-	0.32	0.10	9.9	ST
11/2/87	-	-	-	-	7.35	2	1.0	-	-	-	-	E
11/6/87	-	-	-	-	7.65	220	0.2	-	-	-	-	E
11/12/87	-	-	-	-	7.45	340	0.3	-	-	-	-	E
11/20/87	-	-	-	-	7.30	220	0.6	-	-	-	-	E

BUNDY WTP

E - FINAL EFFLUENT
I - INFLUENT (RAW)
ST - SECONDARY TREATMENT PRE-CHLORINATION

SHEET # 8

DATE	BOD MG/L	COD MG/L	TSS MG/L	OIL & GREASE MG/L	PH	FECAL COLIFORM MPN/100ML	CHLORINE RESIDUAL MG/L	TEMP °C	AMMONIA MG/L	NITRITE MG/L	NITRATES MG/L	SITE
11/16/87	-	-	-	-	7.40	1100	0.5	-	-	-	-	E
10/21/87	-	-	-	1	-	-	-	-	-	-	-	ST
10/7/87	-	-	-	2	-	-	-	-	0.25	0.05	0.08	ST
9/23/87	-	-	-	<1	-	-	-	-	-	-	-	ST
9/14/87	-	-	-	<1	-	-	-	-	0.15	0.04	15	ST
8/10/87	-	-	-	-	8.0	2	1.5	-	-	-	-	E
8/3/87	-	-	-	-	7.85	1300	0.1	-	-	-	-	E
8/5/87	-	-	-	-	7.25	140	0.8	-	-	-	-	E
8/17/87	-	-	-	-	-	2200	0.3	-	-	-	-	E
8/21/87	-	-	-	-	7.60	1100	0.3	-	-	-	-	E
8/26/87	-	-	-	-	7.85	74	0.5	-	-	-	-	E

BUNDY WTP

E - FINAL EFFLUENT
I - INFLUENT (RAW)
ST - SECONDARY TREATMENT PRE-CHLORINATION

SHEET # 9

DATE	BOD MG/L	COD MG/L	TSS MG/L	OIL & GREASE MG/L	PH	FECAL COLIFORM MPN/100ML	CHLORINE RESIDUAL MG/L	TEMP °C	AMMONIA MG/L	NITRITE MG/L	NITRATES MG/L	SITE
8/13/87	-	-	-	<1	-	-	-	-	0.4	0.03	8.2	ST
8/26/87	-	-	-	2	-	-	-	-	-	-	-	ST
7/23/87	-	-	-	<1	-	-	-	-	-	-	-	ST
7/13/87	-	-	-	7	-	-	-	-	0.08	<0.01	8.85	ST
7/22/87	-	-	-	-	7.50	49	0.3	-	-	-	-	E
7/27/87	-	-	-	-	7.4	110	0.2	-	-	-	-	E
7/29/87	-	-	-	-	7.6	220	0.2	-	-	-	-	E
7/20/87	-	-	-	-	7.3	330	0.4	-	-	-	-	E
6/24/87	-	-	-	<1	-	-	-	-	-	-	-	ST
6/17/87	-	-	-	5	-	-	-	-	0.17	0.24	7.19	ST
5/19/87	-	-	-	2	-	-	-	-	-	-	-	ST

BUNDY WTP

E - FINAL EFFLUENT
I - INFLUENT (RAW)
ST - SECONDARY TREATMENT
PRE-CHLORINATION

SHEET # 10

DATE	BOD MG/L	COD MG/L	TSS MG/L	OIL & GREASE MG/L	PH	FECAL COLIFORM MPN/100ML	CHLORINE RESIDUAL MG/L	TEMP °C	AMMONIA MG/L	NITRITE MG/L	NITRATES MG/L	SITE
5/5/87	-	-	-	1	-	-	-	-	0.12	4.1	16	ST
5/17/88	-	-	-	-	-	1700	0.2	-	-	-	-	E
5/19/88	-	-	-	-	-	2400	0.2	-	-	-	-	E

The enclosed data was tabulated from files G-7 and G-9, property of the U.S. Navy, Roosevelt Roads, Ceiba, Puerto Rico, Department of Environmental Engineering (Public Works). The data covers 14 water quality parameters analyzed from November 1984 through April 1988 for the Industrial, Capehart, and Bundy Wastewater Treatment Plants.

INDUSTRIAL WTP

DATE	FLOW MGD	BOD-I MG/L	BOD-E MG/L	COD-I MG/L	COD-E MG/L	SOLIDS TSS-I MG/L	SOLIDS TSS-E MG/L	DO MG/L	OIL GREASE MG/L	N TOTAL MG/L	C1 TOTAL MG/L	COLIFORM FECAL MG/L	COLIFORM TOTAL MG/L	pH
6/88	0.499	150	19	277	38	114	25	6.2	<5	6.5	0.4	316	20	7.5
5/88	0.550	120	21	388	53	52	37	6.6	1	15.16	0.4	<20	193	7.5
4/88	0.4	109	23	432	47.3	68	16	5.6	1.5	9.82	0.4	348	163	7.6
3/88	0.34	150	39.6	345	50.2	69	19	5.9	<1	9.35	0.42	354	31	7.4
2/88	0.30	54.7	20	97	61.2	100	33	6.2	3.5	9.62	0.4	54	446	7.5
1/88	0.30	183.33	32.19	425	100	101	20	5.6	4.5	3.89	0.45	30	7	7.3
12/87	0.40	180	8.3	200	55	59.2	29.3	6.4	5	3.27	0.3	>23	247	7.4
11/87	0.37	211.2	22.1	400	<50	257.5	31	4.9	8	7.9	0.4	16	285	7.2
10/87	0.377	345	43.33	400	60	158.5	27.4	5.7	5.5	3.39	0.4	119	45	7.2
9/87	0.258	46	17.75	250	40	39.5	8.3	4.9	<1	6.32	0.4	3	61	6.8
8/87	0.280	226	15	280	60	106.5	15.3	6.7	1.5	9.4	0.4	17	290	7.2
7/87	0.400	605	89	288	95	102	22.7	5.9	5	<7.25	0.5	55	4800	7.2
6/87	0.423	244	28	660	120	292	20	5.6	1	2.62	0.34	647	3440	7.2
5/87	0.461	-	-	-	-	556	8	5.77	1	8.34	0.48	-	-	7.1

INDUSTRIAL WTP

DATE	FLOW MGD	BOD-I MG/L	BOD-E MG/L	COD-I MG/L	COD-E MG/L	SOLIDS TSS-I MG/L	SOLIDS TSS-E MG/L	DO MG/L	OIL GREASE MG/L	N TOTAL MG/L	C1 TOTAL MG/L	COLIFORM FECAL MG/L	COLIFORM TOTAL MG/L	pH
5/87	0.461	-	-	-	-	556	8	5.77	1	8.34	0.48	-	-	7.1
4/87	0.400	403	10	850	45	351	8	5.9	<1.5	6.68	0.5	3	14	7.1
3/87	0.400	540	28	153	23	153	23	6.3	1.5	2.4	0.6	13	142	7.1
2/87	0.400	210	14	600	52	181	20	6.4	4	0.95	0.6	1	34	7.0
1/87	0.400	557	15	1400	50	820	9	5.6	7	29.9	0.7	1	3	7.1
12/86	0.400	286	15	300	25	123	18	5.4	4	13.92	0.6	7	45	7.1
11/86	0.400	305	15	1000	50	494	22	5.2	<4	0.77	0.5	4	18	7.1
10/86	0.400	185	18	600	42	231	23	4.7	<1.5	3.92	0.5	52	1220	7.0
9/86	0.358	157	18	300	106	184	64	6.2	<2.7	6.99	0.4	721	8077	7.0
8/86	0.400	378	22	850	70	378	17	4.5	1	8.2	0.8	25.75	1450	6.9
7/86	0.400	150	11	697	35	96	12	4.5	6	4.82	0.66	11	8.8	7.0
6/86	0.400	260	27	200	50	176	18	4.6	4	8.8	0.5	5	-	7.1
5/86	0.400	340	18	950	50	363	13	4.8	2.5	3.21	0.6	32	-	7.2
4/86	0.400	211	45	-	-	166	29	-	-	-	0.6	89	-	7.2

INDUSTRIAL WTP

DATE	FLOW MGD	BOD-I MG/L	BOD-E MG/L	COD-I MG/L	COD-E MG/L	SOLIDS TSS-I MG/L	SOLIDS TSS-E MG/L	DO MG/L	OIL GREASE MG/L	N TOTAL MG/L	C1 TOTAL MG/L	COLIFORM FECAL MG/L	COLIFORM TOTAL MG/L	pH
3/86	0.400	-	-	-	-	-	-	-	-	-	0.6	-	-	-
2/86	-	-	-	-	-	-	-	-	-	-	0.6	-	-	-
1/86	0.400	211	18	-	-	327	14	-	-	-	0.53	0	-	7.5
10/85	0.378	171	15	-	-	249	15	-	-	-	0.5	9	-	7.2
7/85	0.425	233	19	-	-	162	20	-	-	-	0.39	6	-	7.0
4/85	0.382	253	25	-	-	248	30	-	-	-	0.6	11	-	7.0
11/84 1/85	0.413	296	27	-	-	266	13	-	-	-	0.7	2	-	7.4

CAPEHART WTP

DATE	FLOW MGD	BOD-I MG/L	BOD-E MG/L	COD-I MG/L	COD-E MG/L	SOLIDS TSS-I MG/L	SOLIDS TSS-E MG/L	DO MG/L	OIL GREASE MG/L	N TOTAL MG/L	C1 TOTAL MG/L	COLIFORM FECAL MG/L	COLIFORM TOTAL MG/L	pH
6/88	0.477	78	5	201	26	132	11	7.4	4.5	9.32	0.49	177	56	7.4
5/88	0.335	192	8	479	47	64	57	7.2	<1	9.87	0.5	425	279	7.4
4/88	0.181	317	125	674	226	134	14	7.2	1	5.24	0.5	153	1568	7.4
3/88	-	555	28.6	1077	28.9	1444	<5.0	7.26	<1	11.58	0.55	282	190	7.5
2/88	0.174	108	16.4	374	31	136	11.7	7.3	2.5	10.19	0.4	45	660	7.4
1/88	0.158	224	48.5	580	80	283	77	7.4	0.53	5.88	0.43	>418	6231	7.2
12/87	0.419	495	39.8	480	65	66.4	191	7.8	3	4.98	0.4	12300	11000	7.2
11/87	0.407	240.84	98	500	80	685.8	60	7.4	1	11.53	0.4	340	879	7.2
10/87	0.538	365	75	500	70	306.5	25.5	6.7	1.5	6.5	0.4	42	512	7.2
9/87	0.432	50	28	260	20	156	10.4	6.5	<1	3.37	0.6	42	254	7.1
8/87	0.243	242	64.5	700	70	195	87	5.9	2	6.9	0.4	69000	58000	7.1
7/87	0.228	673.1	645	500	102	269	51	5.5	<2.5	6.65	0.4	38092	122706	7.1
6/87	0.443	217	42	410	30	154	18	7.3	4.5	4.94	0.3	417	3348	7.2
5/87	0.351	-	-	-	-	192	111	6.7	1	-	0.58	-	-	7.3

CAPEHART WTP

DATE	FLOW MGD	BOD-I MG/L	BOD-E MG/L	COD-I MG/L	COD-E MG/L	SOLIDS TSS-I MG/L	SOLIDS TSS-E MG/L	DO MG/L	OIL GREASE MG/L	N TOTAL MG/L	C1 TOTAL MG/L	COLIFORM FECAL MG/L	COLIFORM TOTAL MG/L	pH
4/87	0.582	130	232	280	1500	110	636	6.06	<1.5	6.68	0.4	8341	185255	7.2
3/87	0.474	342	51	360	70	171	30	6.6	<1.5	3.28	0.45	1900	71000	7.1
2/87	0.300	298	23	312	35	93	17	6.2	<3	0.89	0.4	237	7345	7.0
1/87	0.298	117	12	923	12	100	18	7.1	1.5	18	0.4	237	7345	7.0
12/86	0.349	270	24	190	15	106	15	5.5	7	<1.74	0.3	4411	75611	7.1
11/30	0.368	535	20	1100	40	819	24	5.4	4	1.14	0.3	2443	4856	7.0
10/86	0.437	56	8	107	67	70	45	4.7	<1	7.26	0.5	2032	29146	7.1
9/86	0.400	157	12	350	48	121	17	4.2	<4	8.05	0.5	35	618	7.0
8/86	0.298	442.5	130.5	625	55	290	160	7.0	2	8.3	0.3	1550	8828	6.8
7/86	0.233	161	9	10.53	20	172	13	7.5	15	6.18	0.4	94	1658	7.0
6/86	0.281	270	15	150	30	266	16	6.9	3	8.12	0.3	51	-	7.0
5/86	0.409	191	56	300	73	229	48	5.7	8.5	6.46	0.4	5	24	7.0
4/86	0.251	287	19	-	-	451	35	-	-	-	0.4	162	-	7.0

CAPEHART WTP

DATE	FLOW MGD	BOD-I MG/L	BOD-E MG/L	COD-I MG/L	COD-E MG/L	SOLIDS TSS-I MG/L	SOLIDS TSS-E MG/L	DO MG/L	OIL GREASE MG/L	N TOTAL MG/L	C1 TOTAL MG/L	COLIFORM FECAL MG/L	COLIFORM TOTAL MG/L	pH
3/86	-	-	-	-	-	-	-	-	-	-	0.4	-	-	-
2/86	-	-	-	-	-	-	-	-	-	-	0.3	-	-	-
1/86	0.260	180	14	-	-	226	30	-	-	-	0.46	0	-	6.8
10/85	0.318	138	7	-	-	121	7	-	-	-	0.3	8	-	6.8
7/85	0.423	152	22	-	-	152	11	-	-	-	0.34	23	-	6.8
4/85	0.341	203	39	-	-	166	62	-	-	-	0.4	17	-	7.1
1/84	0.353	224	14	-	-	147	15	-	-	-	0.5	4	-	6.9

BUNDY WTP

DATE	FLOW MGD	BOD-I MG/L	BOD-E MG/L	COD-I MG/L	COD-E MG/L	SOLIDS TSS-I MG/L	SOLIDS TSS-E MG/L	DO MG/L	OIL GREASE MG/L	N TOTAL MG/L	C1 TOTAL MG/L	COLIFORM FECAL MG/L	COLIFORM TOTAL MG/L	pH
6/88	0.447	78	5	201	26	132	11	7.4	4.5	9.32	0.49	177	56	7.4
5/88	0.335	192	8	479	47	64	57	7.2	<1	9.87	0.5	425	279	7.4
4/88	0.025	310	7.1	798	18.7	602	9	6.8	1.5	17.34	0.4	67	1284	7.6
3/88	0.015	735	17.8	4700	25.6	3280	<5	7.3	<1	15.4	0.4	51	61	7.6
2/88	0.032	176	9.9	402	32.1	208	8	7.1	<1.5	11.31	0.3	106	382	7.5
1/88	0.035	172	14.6	220	40	81	12	7.39	<8	6.18	0.3	24	38	7.4
12/87	0.046	129	15.6	100	48	51.6	15.6	7.3	6	7.71	0.4	4	17	7.4
11/87	0.065	139.33	9.4	400	80	298.67	13.1	7.2	4	10.32	0.4	22	129	7.4
10/87	0.043	71	7.5	60	30	24.7	5.7	7.4	1.5	6.5	0.5	2	30	7.3
9/87	0.025	243	12	210	20	66	6.5	7.1	<1	15.19	0.6	2	162	7.4
8/87	0.009	395	7	600	20	277	8	7.5	1.5	8.6	0.5	13	203	7.6
7/87	0.033	522	22	350	15	73	5	7.4	4	<8.93	0.5	41	172	7.4
6/87	0.069	205	10	500	20	86	6	6.1	3	7.6	0.4	7	630	7.5
5/87	0.087	-	-	-	-	48	6	7.16	1.5	-	0.37	-	-	7.4

BUNDY WTP

DATE	FLOW MGD	BOD-I MG/L	BOD-E MG/L	COD-I MG/L	COD-E MG/L	SOLIDS TSS-I MG/L	SOLIDS TSS-E MG/L	DO MG/L	OIL GREASE MG/L	N TOTAL MG/L	C1 TOTAL MG/L	COLIFORM FECAL MG/L	COLIFORM TOTAL MG/L	pH
4/87	0.042	124	5	350	30	166	4	6.5	2.5	10.83	0.5	4	22	7.3
3/87	0.069	47	8	1200	50	746	12	6.6	1	5.25	0.6	6	79	7.1
2/87	0.057	488	14	138	29	37	6	6.0	4	1.06	0.4	1	12	7.2
1/87	0.054	496	12	760	25	820	9	5.0	3.5	35.56	0.4	707	122	7.3
12/86	0.040	>740	6	925	10	178	12	6.7	8	10.21	0.5	3	22	7.4
11/86	0.046	408	6	500	40	350	10	6.3	3	2.3	0.4	27	344	7.3
10/86	0.037	88	4	150	10	46	10	6.6	<1	8.26	0.4	9	100	7.4
9/86	0.046	127	5	250	20	93	7	6.5	<2.5	-	0.4	6	2055	7.2
8/86	0.061	102	7	63	10	33	12	6.9	1.75	10.91	0.57	5	25	7.2
7/86	0.042	40	4	50	20	78	9	6.7	14	7.72	0.8	1	37	-
6/86	0.028	113	3	200	25	47	6	6.2	10	12.53	0.6	19	13	7.4
5/86	-	162	12	250	45	174	6	5.1	16	-	0.7	2	11	7.0
4/86	0.053	203	8	-	-	161	8	-	-	-	0.5	21.2	-	6.9

BUNDY WTP

DATE	FLOW MGD	BOD-I MG/L	BOD-E MG/L	COD-I MG/L	COD-E MG/L	SOLIDS TSS-I MG/L	SOLIDS TSS-E MG/L	DO MG/L	OIL GREASE MG/L	N TOTAL MG/L	C1 TOTAL MG/L	COLIFORM FECAL MG/L	COLIFORM TOTAL MG/L	pH
3/86	-	-	-	-	-	-	-	-	-	-	0.6	-	-	-
2/86	-	-	-	-	-	-	-	-	-	-	0.4	-	-	-
1/86	0.058	224	6	-	-	538	8	-	-	-	0.45	0	-	7.5
10/85	0.060	68	5	-	-	98	6	-	-	-	0.41	3	-	7.4
7/85	0.045	214	4	-	-	162	5	-	-	-	0.6	4	-	7.4
4/85	0.030	223	7	-	-	162	5	-	-	-	0.8	11	-	7.2
11/85	0.060	200	6	-	-	404	7	-	-	-	0.76	0	-	7.3

APPENDIX 3

Summary of Field Investigation, June 1988

SUMMARY OF FIELD INVESTIGATION
U.S. NAVAL STATION
ROOSEVELT ROADS, PUERTO RICO

DATE	FAC. NO.	USE	OBSERVATIONS
6/10/88	27	Hazardous Waste Storage	No apparent floor drain. Mostly dry general materials. Drums of floor wax floor polish remover, aircraft surface cleaning compound, battery water, detergent, Pyrethrum (insecticide).
6/10/88	479	Hazardous Waste Storage	Open shed. No floor drain.
6/10/88	2034	Pest Control	Malathion, Dursban-TC (terminate), FICAM-W (insecticide), Baygon (roach spray), Diazinon 2D, Abate-ISG (Temephos for mosquitos) Trichloroethane Diphacinore Rodenticide. Kermex weed killer, roundup herbicide, Divron 80 WP weed killer. Chemical storage and handling area is isolated without floor drain. Slop sink is marked for no chemical disposal. Outside curbed chemical handling area has drain. May drain to sanitary sewer.
6/10/88	1787	Veterinary Clinic	No chemicals in quantities greater than one gallon. Iodine, scrub. Animals are dipped at animal shelter in Bundy Area. (Mr. Webb)

6/10/88	394-1730	Torpedo Shops	Liquid cyanide, otto fuel nitroglycerin for torpedoes, mineral spirits, isopropyl alcohol, trichloroethylene (spray cans) acetone (small cans), tolure (spray cans), silicone grease, MEK (small cans polyamide, xylene, ethylene glycol, paint, cleaning with mineral spirits. Reused and drummed.
6/10/88	394	Fueling Run	All spills are drummed.
6/10/88	394A	Drum Storage	No floor drain.
6/10/88	1730	Warehouse	No floor drain.
		Paint Booth	On pavement. No drain.
6/10/88	1788	Refrigeration Shop	Dry parts storage, descaling chemicals for cooling, towers dry and liquid. (State Formula 418 - No metals, phosphate) Coils cleaned with matter vista outside. Freon 11 in 10 gal drums. No apparent floor drains.
		PIER AREA	
6/10/88	803	Fire Pump and Emergency Generator	No inside fuel storage, no floor drains
6/10/88	896	Fuel Valve Pit	Below grade covered pit with valve manifold. No apparent drains.
6/10/88	2252	Ship Parts Storage	Bin parts and engines. No evidence of floor drains or stored fuels or lubricants. Metal shop.
6/10/88	2086	Flammable Storage	10 gal drums of paints, coatings, lubricants, acetone, oil corrosion inhibitors. Floor drains. According to Environmental, drain to container.

6/10/88	2036	Oil Spill Containment Overboard Engine Servicing	Oil/water separator overflows to sanitary sewers. Numerous marine batteries and charges. Floor drains.
6/10/88	443	Defuel Vehicle Parking Area Aircraft fuel	Truck parking pads with curb and sump; no drain. Valve pits and vehicle wash drain to oil/water separator. Overflows to sanitary sewer. Environmental advised, it discharges to storm drain.
6/10/88	48	Personnel Area Bin Storage	Clean
6/10/88	373	Flammable	Could Not Enter.
6/10/88	371	General Storage	Bin and large parts storage. 30 gal drums of parts cleaning fluid (Agitene) napthane. Dipropylene, Glycol Methyl Ether. 5 gal drums of lube oil. No apparent floor drains 55 gal drums of hazardous waste and lube oil outside. No containment.
		AIRFIELD AREA	
6/13/88	426	Aircraft Terminal	Did not inspect.
6/13/88	791	Dry Eqpt. Storage	No floor drains forklift fueling on outdoor apron.
6/13/88	826B 826A 1749	Electric Service Vehicle Maintenance	Oil change waste oil is drained to drip pans and bucketed into tank cart. Cart is trucked away for salvage. No floor drains. Wash rack between 826A & 826B. Use aircraft surface cleaning compound MIL-C-43616C. May drain to sanitary sewer.

6/13/88	379	Aircraft Maintenance Hangar	High-bay with floor drains drains, for small aircraft service. Machine shop office. No coolant and no floor drains. Use dry cleaning solvent. Cuttings are stored in bins and salvaged. Ordinance shop. No floor drains. Washdown for tires. Recycle system in containment curb. Solvent contains, beryllium. Periodically trucked away. Deck drains may flow to sanitary sewer. Have had fuel spill. Have parts cleaning units, PD 680, which is drummed for removal. Engine maintenance. Waste oil transferred to 826B oil cart. Major spill overflows to outside pavement and into surface ditches. Salvage drums are stored outside. Lead-acid battery, locker. Battery cleanup, electrolyte addition, neutralization. No floor drain except sink-and emergency shower. Overheated battery is set in shower. Spills are neutralized, flushed and mapped. Nicad battery storage locker. No service. No floor drains. Overheated battery is set in sink. Hydraulic fluid and motor oil. No floor drains. KOH electrolyte Cleaning booth upstairs uses MIL-D-16791E alkyl polyethene alcohol.

			Hydraulic test stand is self contained. No fluid replacement, only filters, Minimal chance of spill. Room fills with water from floor drain in room.
6/13/88	497	Dry Storage	No floor drains.
6/13/88	418	Materials Warehouse	Aviation supply electronic and tires. No floor drains.
6/13/88	494	Aviation Supply Dept	Office space and dry storage. No floor drains.
6/13/88	777	Parachute Loft and Raft Repair	No floor drains. Tiled floor. Clean area.
6/13/88	1625	Aircraft Servicing	Back area has no deck drain inside or out. Waste oil to drums. Fuel spills, overflow to surface water. Lube oil, transmission oil, cleaners, are stored outside. Containment around tank cart.
6/13/88	396	Aircraft Wash Rack	Outside uncovered area. 2 deck drains have valves for discharge to drainage ditch or oil/water separator. Rainwater overflow to drainage ditch. Cleaning compound MIL-C 43616C. Fresh water hose and scrub operation. Also have a water spray system to remove salt. Overflow to drainage ditch.
6/13/88	1673	Sandblasting and Spraypaint	Hazards storage is an outside shed. No floor drains except slop sink. Paint stripping in a containment area. Use MIL-R-81294-C. Has drain and oil/water separator. Excess rainwater overflow to ditch. Effluent goes to sanitary sewer.

6/13/88	1930	Spray Booth Sandblast Area	No floor drains
6/13/88	378 2245	Weapons	Could not enter. Contact Master Chief Clerk Ext. 4288
		RANGE TECHNICAL SUPPORT	
6/13/88	1728	Facilities Maintenance for Generators Targety Air-Conditioning	Battery charging room with no floor drains. Slop sink. Machine shop. No floor drains.
6/13/88	1967	Vehicle Maintenance	No floor drains. Waste oil is contained outside.
6/13/88	1819	Electronic Repair Shop	Clean. No floor drains.
6/13/88	825	Office, Precision Measurements Eqpt. Lab	Clean. Batteries generators for UPS are stored outside under shed roof.
6/13/88	1870	Logistics Support Shipping and Receiving	No floor drains.
6/13/88	860	Aerial Target Servicing	No fueling, Apron drain. Deck drains flow to drainage ditches. Defueling and cleaning take place outside on apron over a grated curbed area. Apparently, fuel is stored in underground tank. Underflow from tank goes to sanitary sewer according to construction drawing. Engine runs pits. Drain connected to apron drain. Battery charging facility. No floor drain. Outside fuel, oil solvent drain storage in curbed pad valved, drain from sump discharges to ditch.
6/13/88	1980	Supply Building	Dry materials warehouse. No floor drains. Battery storage room and electrolyte addition. Lead/acid. Floor drain. Generator in shed outside. No floor drain.

6/13/88	376	Development and Engineering	Dry bulk materials. Warehouse in rear. Offices in front.
6/13/88	248	Old Hangar	Jet aircraft engine storage. Floor drains, but no evidence of fuels.
6/13/88	200	Hangar	Aircraft inspection and supply. No apparent fueling. No floor drains.
		CAMP MOSCRIP (SEABEES)	
			Contact Master Chief Gastineau Comcblant Detach X4207.
6/14/88	3046	Galley	2350 served daily, 400 total in camp. Deck drains in kitchen, floor and counter grease. Mainly, grease from pots and pans thrown in dumpster. A grease pit is under construction.
6/14/88	3047	Laundry	Two large boilers, oldest one decommissioned. It leaked fuel oil regularly into deck drains. Deck drains currently has oil sheen. New boiler has no leaks, blow-down into outside sump. Possibly, drains into sanitary sewer. Laundry room has 16 washers/16 dryers with deck drains.
6/14/88	3090	Clubhouse-Snack Bar	Small mess, pool tables.
		SEABEE CAMP	
			Master Chief Gastinaeu
6/15/88	3152	Pest Control	Mathalian, diazinon, etc. Inside sink used to hold and wash hand-held sprayers. Outside deck area has perimeter trench drain discharging to sanitary sewer.

6/15/88	3105	Vehicle Servicing	Lubricant rack is contained. No apparent drain. No floor drains in building. Tire shop. Second lube rack has not containment, no drain. Oil change rack outside, no drain. Waste lube oil is drummed and contained. Also, appears to have a buried oil tank. Machine shop and storage for portable machine shop; cuttings are drummed. No floor drains and disposed of in dumpster. Welding shop. Vehicle paint shop in covered shed. No floor drains. Vehicle wash rack. Steam genny, no apparent cleaners, Drains to grit trap. Vehicle fuel islands. No drain or manhole nearby. Diesel fuel tank is above grade and has a drain to sump; no apparent outlet.
6/15/88	3158	Battery Shop	Lead/acid battery service, charge and electrolyte addition. Charge area has depressed floor with drain.
6/15/88	4051	Live Storage Road Test	Service building in a large graveled, bivouac area for vehicles ready for operation. Lube rack, no container, no fueling.
6/15/88	3151	Paint Storage	
6/15/88	3166	Shop Building	Wood shop. Paint shop, no floor drains.
		Soils Lab	Did not inspect. Environmental advised that building has a bitum lab using solvents.
6/15/88	31	Public Works	Second level, empty salvage drum storage. No floor drains.

			Ground level, dry material and parts storage. Welding and machine shop no drains. Battery room for charging and electrolyte, with floor drain.
			Vehicle lube area with floor drains.
			Tire service area, no drains.
			Outside. Hydraulic tractor fluid drums stored without containment or drain. Large lead/acid battery stored. Paint area no floor drains. Paint storage cage, no drains. Oil change area, no drains.
6/15/88	1784	Lube Building	Oil change ramp. Parts wash, vehicle lube. No drains, no apparent spills.
6/15/88	31	Vehicle Wash	Floor drains. Isopropyl alcohol used for clean-up.
6/15/88	1207	Shipping and Receiving	Warehouse. No floor drains.
	1982	Fuel Pumping Facility	Jet fuel valve pit with floor drain. Truck fill area in container, except pipe passes to fuel truck stand, also contained and with drain. Large engine-driven emergency generator.
6/15/88	466	Fuel Pumping Facility	Fuel pumps and valves in a contained area, with drain.
6/15/88	192	Petroleum Testing Lab	Sinks in lab are used for container and apparatus wash. No fuel specimens are dumped into sink; they are dumped into tank carts outside. Mr. Wingquist.

6/15/88	1790	Hospital	Lab waste chemicals, acid solutions, alkalies, alcohols, xylene, mercury is stored in containers and picked up by NAVSTA Contractor. One sink is designated for disposal, used for I-125 radio isotope disposal. X-ray wash out developer and fixer outside. Silver is recovered. Medical Supply (Lt. J. G. Boatschamp) picks up recovered silver and spent X-ray film
6/15/88	1790	Hospital	Go to DRMO in boxes of film and silver slush in garbage bags.
6/15/88	1810	Supply Warehouse at Hospital	Could not speak with Chief Dockum.
6/16/88	31	Public Works	Grit trap on Building 31 vehicle wash. Point of discharge is unknown. No apparent oil/grease.
6/16/88		Quarantine Area	Oil/water separator at vehicle wash rack. No apparent oil/grease. Point of discharge unknown.
6/16/88	1995/ 1996	Fuel Storage	Fuel tank containment embankments have drains. Environmental advised that the discharge can be directed to storm on sanitary sewer.
6/16/88	378	Weapons Research	Chief Hayslip. Mark 30 shop has battery shop. Otto fuel and paint storage. Battery charging area for silver/zinc batteries is in electronics lab with emergency shower floor drain. Paints, floor polish, lubricants, transmission fluids are stored in an outside metal building with no floor drain. Salvage batteries are stored outside on the ground.

6/16/88	380	Missile Test	All dry activities. Very minor battery charging using KOH electrolyte.
6/16/88	825	Fire and Safety	Liquid fire extinguishing foam storage. No floor drain.
6/16/88	825	Firefighting Exercise	Contained area with ballast and aircraft shell. Ponded with fuel. Numerous fuels used. Has: 1. Holding tank to maintain liquid level in containment. 2. 4 X 12 X 8 surge tank. 3. Oil/water separator. 4. Sump pump to sewer.
6/16/88	1686	Laundry/Dry Cleaning	Mrs. Sanchez (Ext. 5270) Perchlorethylene dry cleaning operation has solvent recovery. Floor drains in area but no direct connection.
6/16/88	515	Auto Service Care Center	Lift area; no floor drains. Battery and parts store. No floor drain in pit. Old batteries are stored outside contained area with valved drain to grade. 2-500 gallon buried tanks for crankcase oil Contract removals.
6/16/88	1914	Car Wash (Abandoned)	Grit trap drains to sewer. Free oil on water in trap.
6/16/88	1211	Golf Course Maintenance	Herbicide application is by Contract.
6/16/88	201	Auto Hobby Shop	Inside service area has floor drains. Outside containment area for used crankcase oil is not used. Drums of oil and obvious spills;. No drains to sanitary sewer. Shop is responsible for disposal of drums off station.

6/16/88	2086	Flammable Storage	Holding tank does not appear to have an overflow. Tank is 3' deep and 10' long.
		DIVING SERVICE	
6/16/88	787	Diving Locker	Could not obtain access Lt. Goodman, Ext. 4721.
6/16/88	792	Vehicle Maintenance	Could not obtain access Lt. Goodman, Ext. 4721.
6/16/88	29	Boat Shop	Could not obtain access Lt. Goodman, Ext. 4721. Includes battery shop.
6/16/88	2248	Base Diving Locker	
6/16/88	30	Explosive Ordinance	Office and Storage

PHOTO LOG

DATE	TIME	FRAME	SUBJECT
6-10-88	10:50	1	Outside drain Building 2034 Pesticide Storage
6-10-88	11:49	2	Building 1788 Freon Storage
6-10-88	11:49	3	Building 1788 Meters, Compressors
6-10-88	11:52	4	Building 1788 Wash-Down Area
6-10-88	13:02	5	Manhole downstream of Berthing Pier - sample Point #3
6-10-88	13:25	6	Berthing Pier - Ship Sewage & Bilge Discharge (Typical)
6-10-88	13:50	7	Building 2086, paints, solvents etc. Storage with floor drain
VOID		8	VOID
6-10-88	14:06	9,10	Building 2036 oil/water seperator
6-10-88	14:14	11	Building 2036 Battery Storage-Outboard Motor Repair Flow Drain
6-10-88	14:21	12	Building 443, washdown of defueling vehicles into oil water separator
6-10-88	14:23	13,14	Building 443 - oil/water seperator
6-13-88	8:32	15	Grease trap at 826A and 826B
6-13-88	8:46	16	Floor Drain Building 379
6-13-88	9:34	17	Oil/water separator at 369 (Aircraft wash-rack)
6-13-88	9:44	18	Waste fuel pits adjacent to 1625
6-13-88	9:51	19	Oil/water separator Building 1673 connected to sewer
6-13-88	9:52	20	Containment area Building 1673
6-13-88	11:16	21	Defueling pit Building 860
6-13-88	11:30	22	Battery Room Building 860
6-13-88	11:35	23	Fuel/oil/solvent storage pit with drain into outside ditch.

6-15-88	9:17	24	Inside pest control facility Building 3152
6-15-88	9:17	25	Outside containment area
6-15-88	9:25	26	Lube Rack Building 3105
6-15-88	9:31	27	Lube rack - Uncontained
6-15-88	9:31	28	Oil rack
6-15-88	9:31	29	Underground tank?
6-15-88	9:41	30	Outside battery storage Building 3158
6-15-88	9:44	31	Inside floor drain battery Building 3158
6-15-88	9:48	32	Vehicle wash rack with apparent sediment separator. Steam gennies used - Building 3105
6-15-88	9:55	33	Outside fuel storage - no connection to San Sew
6-15-88	10:03	34	Sump behind diesel fuel tank - destination unknown
6-15-88	10:14	35	Sump behind Building 3047 Boiler blow-down
6-15-88	10:46	36	Battery room with floor drain Building 31
6-15-88	10:49	37	Drain - oil change area

ROLL #2

DATE	TIME	FRAME	SUBJECT
6-15-88	11:02	1	Building 31 - Outside storage - hydraulic fluid, lube oil, battery
6-15-88	11:31	2	Fuel facility #1982 drain from diesel and jet fuel valve pit
6-15-88	11:31	3	Truck loading pit for fuel
6-15-88	11:38	4	Fuel facility 466 with deck drains
6-15-88	12:58	5	X-ray, silver recovery room at hospital with floor drain

6-15-88	14:17	6,7	West trickling filter industrial STP
6-15-88	14:34	8	Caustic feed, industrial STP
6-15-88	14:47	9	Sewage lagoon/industrial STP; oil boom
6-15-88	15:50	10	Capehart STP unit #2 caustic feed
6-15-88	15:59	11	Bundy trickling filter
6-15-88	16:11	12	Effluent parschall flume at Bundy
6-16-88	8:32	13	Grit trap at car wash Building 31
6-16-88	8:44	14,15	Quarantine wash rack grit separator
6-16-88	9:02	16	Fuel tank 1995 containment area drain
6-16-88	9:05	17	Valve stands for fuel tanks 1995
6-16-88	10:09	18,19	Oil/water separator at Crash Crew Site Building ?
6-16-88	11:02	20,21	Dry cleaning facilities with floor drain Building 1686
6-16-88	12:19	22	Outside oil recovery Auto Hobby Shop Building 201
6-16-88	12:29	23	Storage sump being Building 2086
6-16-88	14:43	24-31	Industrial area WPT from top of digester

APPENDIX 4

Daily Log, 18 July 1988 to 11 August 1988

DAILY LOG
STUDY FOR ELIMINATION OF NPDES
VIOLATIONS - U. S. NAVAL STATION
ROOSEVELT ROADS, CEIBA, PUERTO RICO
A & E COMMISSION NO. 1735A

July 18, 1988

Received call from Bill Sarriera at Public Works BLD 31 at 8:20 a.m.:

1. Mr. Sarriera indicated he would be at Building 31 in the next 1 - 1/2 hours.

2. Jerry Sarriera could be with him.

3. He wished to go to the Industrial WTP and look over the sampling sites and begin the sampling effort.

4. He needed to speak with Mr. Bob Canova.

5. I called HSMM - VA. Beach and had Cindy try to reach Canova.

Met with Bill Sarriera, Jerry Sarriera, and Jesus Garcia at 12:45.

Sunny, 85° F
Isolated showers

1. Walked over the 3 WTP's and marked the sampling sites.

2. Jerry Sarriera wanted to know if the Phase IV effort could be completed faster - will contact Roanoke for decision.

3. Algae at Industrial Plant removed by water hose and percolation. The #1 filter is still ponding.

4. Contacted Bob Canova concerning Item 2. He will summarize the telephone conference and telex to Jerry Sarriera.

5. Pump #1 of the 2 chlorination pumps is burned up. The plant is operating with the one good pump.

July 19, 1988

Sunny, 85°F
Isolated Showers

Revised sample schedule (N+1) RCRA remains as is, EPA/EQB scan remains as is, confirmed with John Bradshaw by telephone.

PHASE I
INDUSTRIAL PLANT SET UP:

1. Jesus Garcia takes grab sample with an electric interval sampler while chaining in composite sampler. This (grab) sample is collected in a 1 gallon plastic jug which sets in a ice-water bath. Left overnight.

*NOTE: Prior to July 18, 1988, a hazardous fluids only storage tank (mobile) has been sitting within 10 feet of the Site 1 manhole. A 4-5" corrugated black plastic pipe is unconnected yet leading into manhole. Manhole cover was open prior to sampling. The tank appears full of cooking grease. Confirmed by plant operator as cooking grease which originated form the Seabee Camp.

The composite sampler is roped and chained, secured only by light gauge wire.

Mr. Ortiz indicated that he was instructed to dispose of the seabee gallery grease in two methods:

a. Hot water and an unidentified enzyme is added - liquid matrix pumped directly into influent manhole.

b. Dumped into pit immediately adjacent to primary settling tank for pumping into digester.

All 5 Isco composite samplers in place and working.

Capehart sludge brought in to #3 bed at approx. 11:00 a.m.

July 20, 1988

Sunny, 85°F
No rain

Felix Mestey stated that EQ Lab requested changes to their station pass:

(1) to include Saturdays and Sundays.
(2) to increase to September 30, 1988.

I delivered the letter to the pass gate at approximately 9:00 a.m.

Site 1

Appears that the existing composite samplers is/are replaced by samplers brought from the lab. Confirmed.

Grab samples taken by technician directly from stream by glass bottles. The technician wears a mask/respirator.

Site 5

(1) technician disassembles composite samples and combines the 24 1-liter plastic bottles into a larger 3-5 gallon plastic bottle for composite. Samples remain off ice for approx. 30 - 45 minutes in direct sunlight.

Composite parameter samples are dispensed from the composite sample into 9 brown glass 1 - liter jars.

Site 3

The second technician obtains these samples while the first technician works at station 5.

Site 2

Completed next with similar procedure.

Site 4

Completed next with same procedure.

Industrial sludge dumped July 19, 1988 into NE BASIN (#1).

No problems with any sites.

YSI model 51B oxygen meter used at site 5 (approx. 5.0 mg/l)

Fisher Accumet model 640 mini PH meter used also.

Sample delivery slips completed for each station, signed by E.Q. Labs technician and by myself for HSMM. A copy of each was provided to HSMM.

Visited the marina to look over operations. Was asked to return July 25, 1988 to speak with marina manager.

Wood hobby shop - no apparent floor drains. Wood working equipment only. Did not enter. Painting appears to be done outside.

Coast Guard Station - Engine repair, General Maintenance, etc. Has deck drain to self contained tank. Contracted out. Ship sewerage dumped to Industrial WTP. No bilge put into sanitary sewer.

Several months ago a fuel line ruptured releasing "jet fuel" into the bay. It is believed responsible for a large die-off of mangroves between the Coast Guard Station and the Navy Marina.

July 21, 1988

Sunny, 85°F
No Rain

Between July 20, 1988 (approx. 11:30 p.m.) and July 21, 1988 a large quantity of petroleum-based industrial waste entered the Industrial WTP. Evidence of a large slick in the lagoon. The manhole for site 1 was surcharged due to blockage (partial). Cleared at approx. 9:30 a.m.

E.Q. Lab will sample as normal.

Oil sheen in primary clarifier.

Oil smell in trickling filter. No evidence of oil in secondary clarifier. No evidence of oil in chlorine contact basin.

Site 1

The probe at site 1 was completely snarled with fibrous material, however, the composite sampler did collect a sample. It should be noted that the sampler may have progressively collected less sample due to partial clogging.

Composite sample is black in color. The grates between the influent manhole and the lift station wet-well (sump) were partially blocked (approx. 50%) within 15 minutes of cleaning.

Site 2

Evidence that the lagoon had captured most of the floating sheen. Sample relatively clear. Sample collected with no problem.

*NOTE: The grab samples from the primary and secondary clarifier for July 19 - 21, 1988 are taken from effluent spilling from the left (looking upstream) basin.

Contact Bob Canova.

Site 4

No evidence of oil. May slowly accumulate during the next 48-72 hours. Sample collected as normal.

Site 5

Effluent clear. No evidence of oil. Sample collected as normal.

Appears that the effluent volume is less today.

Environmental personnel has no idea of source of oil.

Oil spill recovery team has no information. They suggest the airfield area.

A drone was fired July 20, 1988. It is possible that a defueling operation occurred.

Observation of the defueling pit at building 860 does not suggest a possible site of origin. No evidence of fresh oil/fuel.

Observed manhole immediately downstream of lift station 39, extra strong petroleum odor! Most likely is drawing from source of oil/fuel.

Wilfredo Rivera indicated that lift #39 draws from the airfield. Mr. Negron indicated that the Marines Phantom Fighters currently undergoing maneuvers on Station use JP-4 jet fuel and suspected that operation as a potential source.

*NOTE: The composite samplers were not replaced from the lab as they were on July 20, 1988.

July 22, 1988

Sunny, 85°F
No Rain

Site 1

The sample appears clear. Collected as normal with no apparent problems.

The lagoon appears to have approximately the same volume of surface sheen/sludge that was noted on July 21, 1988.

The primary clarifier appears to have more oil/fuel residue today.

Talked with Ms. Valls, the chemist for Burns and Roe. We discussed the general problem of periodic oil/fuel introduction to the plant. She was informed by Wilfredo Rivera that the fecal coliforms for the Industrial Plant (July 21, 1988) were high. We agreed that the oil/fuel problem is probably responsible.

Site 3

I informed the E.Q. Lab technician to collect 50% of the grab samples from the primary clarifier from one basin and 50% from the adjacent basin for assurance of composite sampling. He should do the same for the secondary clarifier.

Site 3 was collected accordingly with no apparent problems.

Site 4

Collected as normal. No problem.

Site 5

The battery in the composite sampler was dead at this site. The July 21, 1988 composite was 95% complete, therefore, this sample is probably OK for analysis. Will contact Bob Canova. Confirmed OK by Canova. The E.Q. Lab technician called for a battery replacement. He had to drive to the lab and return for replacement. Need to ask Bob Canova if the sample at site 5 should be collected 24 hours form the time the battery was replaced or if they can sample at normal time (this would result in a 21 hour composite). 21 hour OK confirmed by Canova.

The RCRA sludge analysis will be collected on July 23, 1988.

Mr. Negron received a call from Residence Officer in Charge of Contracting (RIOCC) (Mr. Hernendez) who were connecting the Camp Moscrip sewage lines to the main line leading to the Industrial WTP. Sometime before 9:00 a.m. the sewage line draining the Cabras Island area changed from a normal wastewater to an "oil-sewage" combination. Cabras Island is a facility for drone firing. Will investigate.

E.Q. Lab returned at approx. 1:30 p.m. with new battery. The composite sampler will be checked tomorrow at its regular time.

Negron gave me the AFWTF hazardous materials officer:

Nestor Paradis
x - 5314
x - 5315

I will contact and attempt to get Mr. Paradis to help me investigate Cabras Island as the cause of the oil/fuel slug that went to the Industrial WTP.

Mr. Paradis indicated that Cabras Island is not sewered. He suggested a power plant that sits opposite the Seabee Camp (Moscrip). This information is incorrect. The building in reference is a hazardous materials storage area.

Federal Express shipment from Centec arrived today at approx. 3:00 p.m. Did not get to speak to the driver. I will call 1-800-238-5355 to arrange for pick-ups to follow.

Spoke with Mr. Ruiz in planning concerning the oil/fuel problem. He confirmed that the Cabras Island drone facility is not sewered. He suggested looking at facilities 167, 290, 291, and 178 as well as manholes in that area.

Field investigation of the above sites found nothing.

The Chlorinator pump (#2) which mixes chlorine contact basin water with chlorine burned up. The plant will mix by hand until the pumps are repaired.

*NOTE: The operator indicated that the intakes are too shallow. Also, he believes the basins leak. This seems possible because the pump intake is below the outfall pipe yet both motors have burnt up. Both pumps should have float cut-off switches.

July 23, 1988

Sunny 90°F
No Rain

Did not go to Roosevelt Roads.

July 24, 1988

Did not go to Roosevelt Roads.

July 25, 1988

Spoke with Felix Mestey about getting access to the Bundy and Capehart plant on Saturdays and Sundays for E.Q. Lab. I should contact Maria Enid at ext. 5529.

E.Q. Lab sampled with no problems on July 23 & 24, 1988.

The RCRA was taken on July 23, 1988.

The lagoon is approximately 15% covered with the oil/fuel sheen. The primary clarifier (#2 Basin) is completely sheened over with a surface scum. The #1 basin has approximately 10-15 % coverage. The surface skimmer for both basins

quit working sometime over the weekend. The entire plant has a strong sewage smell, which was not evident from July 18 - July 23, 1988.

I will split sample on July 26, 1988.

All 5 sites completed with no problems.

Observations of the #1 trickling filter:

1. Upon dosing there is a 1.5 - 2 minute delay before the arms begin to swing. There are numerous leaks at the center column and on the arms. The bearings also may be bad. Also there may be clogged lines between the dosing tank and the trickling filter outlets.

Spoke with Maria Enid Valls concerning Saturday and Sunday entry to Bundy Capehart. She recommended speaking to Mr. Marcus at the water filtration plant.

Spoke with Mr. Marcus at the water filtration plant. He will meet them each morning at the plant at approximately 9:00 a.m., follow them to the WTP and unlock the gate.

Spoke with Felix today about the oil/fuel problem. He did not know about it. He mentioned a fuel leak that occurred two weeks prior. An abandoned sewer line may be receiving fuel from the soils. He and I will inspect the lagoon after lunch.

Contacted Bob Canova concerning my meeting with Mr. Marcus and my intentions to split sample on July 26, 1988. He asked that I check on the scheduling of certain activities, i.e. pesticide washing, fire fighting exercises, etc.

Wilfredo Rivera informed me that the Bundy chlorinator mixing pumps are burnt up as well. They appear to have malfunctioned in the same manner as those at the Industrial WTP.

July 26, 1988

Sunny, 90°F
No Rain

Reminded E.Q. Lab of meeting Mr. Marcus on Saturdays and Sundays.

Met with Felix Mestey and the oil recovery team at 8:30 a.m. at the Industrial WTP lagoon. The decision was made to contract a suction truck to remove the floating petroleum sheen. The water will be decanted off and put back into the plant.

*Felix Mestey and Wilfredo Rivera indicated that flow to the Industrial WTP is extremely low (approx. 25,000 gpd). They indicated that flow has been modified since Friday (July 22, 1988) because of construction activities. Today and Friday influent flow was noticeably slow at Site 1. Mr. Mestey will check plant records to trace flow back to normal operation. I will advise Bob Canova of this anomaly. If flow was interrupted for any major length of time the data will be non-representative of normal operations.

Site 1

The composite sampler sampled only 25% of its normal volume. Samples were collected and split for state-side analysis.

Site 2

The composite sampler sampled its normal capacity, however, there was no flow from the lagoon. This sample was split for state-side analysis.

Site 3

Site collected as normal with no problem.

Spoke at length with a Mr. J. Montalvo and a Mr. B. Vazque, both Government Quality Assurance Engineers (QAE). They were both knowledgeable about potential oil mishandling operations in the airfield area. The following list of facilities should be examined closely in phase IV. The facilities with an * are definite problems.

*826
*379
*1625
1673
1930
200
860
*1967
426
791 (contaminated soil)

The Industrial WTP lowest flow was approx. 300,000 gpd for July 22, 1988. Will contact Felix Mestey. Mr. Mestey indicated that no additional sampling is necessary.

Site 4

Collected as normal. Split sample collected.

Site 5

Collected as normal. An unidentified larvae in the contact basin. Operator added dry chlorine 10 minutes before sampling began.

BUNDY WTP SAMPLES - PHASE II

Site 1

ISCO composite samplers used at Industrial WTP were reused at Bundy WTP. The sampler is allowed to run approximately 1 minute pulling sample from site 1 and releasing back in plant. No solvents/acids used to purge sampler or bottles of Industrial Plant contaminants.

Sites 2-4 set up in the same manner.

Chlorinator system inoperable due to impeller malfunction. Bundy is currently chlorinating by hand and monitoring every two hours. Fish are living in the secondary clarifier and in the chlorine contact basin.

Evidence of return of flow to normal at 12:38 at Industrial Plant.

Bill Sarriera called concerning the summary of conference between myself and Bob Canova; subject: Site 5 (industrial) 21-hour composite sample. I explained to Mr. Sarriera that his sampler had failed (battery) and the delay retrieving a new battery resulted in a 21 hour vs 24 hour composite.

Bob Canova asked that I check the Bundy and Capehart flows by meter stick against the in-plant flow meter.

Narrowest width of plume: 2"

The Centec Lab Phase II split sample cooler did not arrive today as originally proposed in the contract. The Bundy EPA/EQB scan will be run on Thursday (7/28/88) as opposed to Wednesday (7/27/88).

JULY 27, 1988

Sunny
85-90°F
Isolated showers

Several thousand small fish are living in the secondary clarifier. Water clarity allows easy viewing of the bottom of the tank. Fish are also found in the dosing tank, communitor, primary clarifier and the chlorine contact basin. Appear to be Poecilid fishes (live-bearer family).

Site 1

Collected as normal today. All future sampling days the sample reservoir bottle will be rinsed with potable water following removal of 24 hour composite. Evidence of a moderate influent flow.

Site 2

Collected as normal. Reminded the plant operator to release some sludge from the digester for RCRA analysis.

*The operator indicated that he periodically washes the primary clarifier spill basin with hypochlorite.

The digester is emptied only two times a year.

Site 3

Collected as normal.

Site 4

Collected as normal.

The flow measurements for this plant are measured by a sonic instrument. The daily total flow is taken from a digital reading directly off the meter (cumulative plant effluent - previous day reading). The paper charts are still not calibrated at this plant.

Spoke with Felix Mestey, Edgar Ramos and Wilfredo Rivera of Engineering/Environmental Management (EEM), J. Maltalvo of Government QAE, and personnel with the Technical Management Division (TMD) concerning the problems associated with the graphic depiction of flow with the three plants. Everyone agreed a problem existed and that action should be taken to calibrate the meters.

A problem exists in the basement of the Bundy digester. The sludge pump leaks oil into a sump which pumps directly into the digester.

The phase II Federal Express containers arrived today. I will split sample on 7/28/88 at Bundy.

July 28, 1988

Overcast
Isolated showers

Bill Sarriera called at 0825 and asked if Mr. Marcus could meet the EQ Lab technician at the gate of each respective WTP. I indicated that I would ask Mr. Marcus. Confirmed: Mr. Marcus will meet the EQ Lab technician at 0900 at the Bundy plant on 7/30 and 7/31.

Discovered a missing container in the Phase II center sampling container. Called Centec at approximately 0900 and spoke with Dave Tompkins. I told Mr. Tompkins that the metals container was missing and he agreed that it had been overlooked by Centec. He indicated that he could sample for metals from the two 1-gallon containers from which pesticides will be analyzed.

Site 1

Collected as normal and split sample for stateside analysis.

Site 2

Collected and split with no problems.

Site 3

Collected and split with no problems.

Site 4

The 24 hour composite sample remaining after EQ Lab obtained their quantity was enough to fill only 1 of the 2 Centec Composite containers. The second container is a grab sample. One of the 4 Centec volatile organics (VOA's) containers was not filled due to loss of a seal into the sewer line.

Handed over Phase II Centec container to Federal Express Driver.

Checked the flow at the parschall flume.

Pulse	8-3/4"
Low	3/4"

Spoke to the Burns and Roe chemist. She believed that in the past some damage to the digester tank may have occurred during operational activities. Roof inspection by myself revealed sewage sludge around the outside top edge of the tank between it and the wall.

July 29, 1988

Sites 1-4 sampled with no problem.

Max flow	10-3/4"
Low flow	1-1/4"

Industrial flow meter graphics appear to be working ok. However, approximately 5-10% of the readings are off scale (>100%)

INDUSTRIAL WTP FLOWS
(X GPD)

7/17	465,600
7/18	569,600
7/19	571,200
7/20	535,700
7/21	566,200
7/22	619,300
7/23	506,300
7/24	594,100
7/25	312,600
7/26	745,900

Capehart has two flow meters.

Plant - the meter appears to be working ok. Going off scale (>100%) approximately 5-10% of the time.

July 30, 1988

Did not go to Roosevelt Roads.

No problems with sampling. EQ Lab took sludge for RCRA analysis.

July 31, 1988

Did not go to Roosevelt Roads.

No problems with sampling.

August 1, 1988

Sunny
90°F
No rain

Minimum flow @ 9:00 a.m. = 1/2"
Maximum flow @ 9:10 a.m. = 8"

The operator indicated that the power to the plant was off when he arrived at 7:00 a.m. The communitor and the sludge/surface skimmers for the primary and secondary clarifiers were down for a undetermined time period.

At approximately 9:30 a.m. the Navy had simulated hypochlorite/chlorine gas spill. Sampling was delayed. This will cause an afternoon set-up for Capehart for 8/2/88. This may create problems for EQ Lab. Will question EQ Lab technician and contact Bob Canova for HSMM's decision. Confirmed to begin sampling at 0900 tomorrow.

Check with Bob Canova. Felix Mestey indicated that he has not received his copy of the Summary of Conference of the EQB meeting. Bob Canova will send Felix a copy of all meetings and the contract between HSMM and EQ Labs.

Visited facility 2034 (pesticide control) and inquired about their frequency of outside tank was-downs. Operator's name is a Mr. Montes (ext. 4114).

He indicated that the wash-downs are provided on a as-needed basis. He will schedule a wash-down for HSMM following contact from HSMM. The operation will likely occur between 2:30 - 3:00 p.m.

Spoke with a Mr. Rodriguez with the airfield crash crew (Extensions 5204, 4187) he indicated that the last fire in the pit occurred over a year ago. They do not run this drill often. He said if HSMM would call they could create an operation easily (i.e. run water into the fire pit).

Supernatant from the Bundy digester was slowly released in-plant today.

August 2, 1988

Sunny
90oF
No rain

Site 1

Collected as normal and picked up composite sampler for placement at Capehart WTP.

Recirculation valve in Bundy Digester tank frozen and in-repair today.

Chlorination system still out-operator hand chlorinates.

Site 2

Collected and removed from Capehart WTP.

Sites 3 and 4

Collected and removed to Capehart WTP.

Bundy plant records indicate that the normal flow pattern changed at 2-p.m. (8/1/88) where flow averaged 100% + until 10p.m. and slowly abated to 65% flows before returning to the 8% - 100%+ pulse pattern at approximately 10:30 a.m. (8/2/88).

At approximately 11:30 a.m.

Low flow = 1/4"
High flow = 7-1/2"

CAPEHART WTP - PHASE III

Stations 1, 2A and 3 set up with no problems.

Site 1 composite sampler was placed inside manhole. It will be chained outside the manhole for 8/3 - 8/9/88.

EQ Lab took the mixed liquor grab from the old basin.

DO for the two tanks (old plant): 1.0 mg/l for tank 2
3.2 mg/l for tank 1

The Centec Phase III cooler did not arrive. I contacted Bob Canova to ensure an August 3, 1988 delivery. Split sampling will be moved to 8/4/88.

Bob indicated that I should call Sarriera and cancel the 8/2/88 mixed liquor composite sampler and specify an 8/3/88 sample from both tanks in the old plant.

Contacted Bill Sarriera. EQ Lab will sample both basins of the old plant on 8/3/88.

Bob Canova asked if I could pull the daily WTP logs for all 3 plants for the last 12 months. These should be copied and returned to Roanoke.

August 3, 1988

Sunny
90°F
Isolated showers

Grab samples taken from tanks I and II from the old aeration basin (same numbering scheme as with Industrial WTP)

Site 1

ISCO moved inside chain fence (in-plant). No problem with sample.

Sites 2A and 3

Collected with no problems.

Found daily WTP logs from 1 - 87 to May 88. Will have these copied for HSMM. Will also locate June and July 1988.

Federal Express delivered the Centec Phase III sampling cooler today. Will split sample Capehart on 8/4/88 with delivery to Centec Monday 8/5/88 at 10:30 a.m.

The Phase III cooler did not have the sample container specified for the Industrial WTP algae sample.

August 4, 1988

Breezy
90°F
Scattered Clouds

Sites 1, 2A and 3

Sampled (split) with no problems.

Grabs taken for site 3 will be old plant effluent for 8/2 and 8/3/88. Grab samples at site 3 for 8/4 - 8/9/88 will be new plant and old plant effluent. The 24-hour composite samples for site 3 represents a composite of old and new plant effluent for the entire sample week.

Spoke with Mr. Edgardo Ramos with Environmental. He recently joined the staff and Mr. Mestey placed him in charge of 1735A. Mr. Mestey will still oversee the project, however, Mr. Ramos will serve as the point of contact for HSMM. Mr. Ramos questioned the EQ Lab sampling procedure. I indicated that they seemed competent in the field and arrived on-time each day for sampling. I did indicated, however, that I did not agree with the lack of *washing which we agreed was necessary between not only daily samples, but also mandatory between each WTP.

* Washing - the process of stripping the sampler and collection bottle of all contaminants (i.e., oils, greases, solvents, organics, etc.).

Spoke with Bob Canova - He indicated that Mr. Bradshaw wanted HSMM to visit the EQ Lab to insure samples were given priority.

August 5, 1988

Sunny
No Rain
90°F

Spoke with Bruce Aitkenhead at 0830. He was going to speak with Bob Canova concerning the need for washing of samplers between WTP's. We agreed that one visit to EQ Lab followed by periodic phone calls might suffice in establishing HSMM's presence and the need for quick results from EQ Lab.

Spoke with Jerry Sarriera. He indicated that I could visit the lab at any time. I asked if any problems existed with our samples. He indicated that there were no problems.

Felix Mestey indicated that two problems were identified with the automatic chlorination system with the Industrial and Bundy WTP's.

1. When one of the two pumps were not in operation the end result was a 50% reduction in volume of the operating basin.

2. The contractor who installed the system installed the intakes at an inadequate depth. The pumps will be replaced and intakes set up two feet from the bottom of each basin (originally they were 4 feet off bottom).

The operator indicated that he was having problems with the new plant. The digester has no overflow. Because it was very full, one of his air lift pumps failed. They were working on it at 0900. The operator discharged sludge to one of his beds. Although two beds were empty when the air lift failed, the operator indicated that he needed the trucks hauling the sludge away to come more often. The digester had just had 2000 gallons removed two days earlier.

The air lift pump was repaired at 1300.

Told environmental secretary I would need the daily WTP logs from January 1987 until present. There will be no problems.

Spoke with personnel at the water treatment plant confirming that Mr. Marcus would open the Capehart gates at 0900 on 8/6/88 and 8/7/88.

August 6, 1988

Sunny
No Rain
90°F

Did not go to Roosevelt Roads. EPA/EQB scan was run with no problems.

August 7, 1988

Mostly Sunny
Light Rain
90°F

Did not go to Roosevelt Roads. No problems with sampling.

August 8, 1988

Sunny
No Rain
90°F

Originally had planned to go to EQ Lab this afternoon. Had to postpone until Tuesday.

Sites 1, 2B and 3 collected with no problems. Will complete sampling (Phase III) tomorrow.

August 9, 1988

Overcast
Rain, heavy at times
86°F

Finished Phase III sampling effort with no problems. Returned to EQ Lab with the technician.

Sample analysis going smoothly according to Jerry Sarriera.

HSMM was given raw data compiled to date. Jerry Sarriera reminded that the data was subject to revision. HSMM can expect a series of typed results in the mail in one to two weeks.

August 10, 1988

Spoke at length with Wilfredo Rivera and Edgardo Ramos concerning the Industrial Plant. The following concerns were noted:

1. Mr. Rivera believes that the volume of floating solids in the secondary clarifier are much too high. This problem has persisted for many years. Prior to the construction of the lagoon and the aerator, an attempt to control this problem included the installation of floating solids removers (manual). In general, turbidity has been a problem with NPDES compliance. He questioned if perhaps sludge removal management is improper at the Industrial WTP.

2. Color has also been a problem with NPDES compliance. Mr. Rivera was concerned that color was not analyzed for in HSMM's Phase I - III effort.

3. Mr. Rivera indicated that the Station potable water (raw) is adjusted for pH because it is characteristically low (6.9 - 7.2). It is raised to 8.2 - 8.4. The final product has an alkalinity (CO_3; Ca^+) of 30 - 40 ppm. He believes that this is low and when mixed with sewage produces a fairly low influent pH. He questions if an unidentified problem (operation(s)) exists upstream resulting in low influent pH values.

Visited the Industrial Plant to obtain algae sample from trickling filter. Filter #1 is in bad need of maintenance. The arms have almost completely ceased

rotation. Only periodically do they move, completing a full revolution once every 5 - 8 minutes. At the time of visit, the dosing tank seemed to be operating properly for trickling filter #2, while filter #1 received continuous flow and was not receiving doses of wastewater.

The lagoon seems relatively free of the 7/21/88 petroleum slug.

The skimmer for the primary clarifier is repaired and operating.

Took algae sample from filter #2 and sent overnight to HSMM, Virginia Beach.

Spoke with Bill Sarriera and set up a visit to EQ Labs to pick up any additional raw data available.

August 11, 1988

Visited EQ Lab and picked up additional raw data. Jerry Sarriera indicated HSMM would receive some typed results by next week.

Returned to the Station and finished copying supplemental data from environmental's files and met with Felix Mestey before leaving for Virginia.

APPENDIX 5

Laboratory Test Reports, Environmental
Quality Laboratories, Inc.

CLIENT: Hayes, Seay, Mattern & Mattern, Inc.
ADDRESS: 1315 Franklin Road, SW Roanoke, VA. 24016
W.O.# 516-01-01
DATE: August 15, 1988
ATTN: Mr. Robert F. Canova
FACILITY: Nav. Sta. Roosevelt Roads, Ceiba/Industrial WWTP

LABORATORY TEST REPORT

TABLE #1

eqlab ENVIRONMENTAL QUALITY LABORATORIES, INC.

ANALYTICAL TEST RESULTS

EQ LAB SAMPLE #	DATE COLLECTED	SAMPLING POINT	ALK mg/L $CaCO_3$	BOD mg/L	COD mg/L	SS mg/L	NH3-N mg/L	NO3N mg/L	NO2N mg/L	O/GF mg/L	DO mg/L	pH Std. Units	SALINITY 0/00
34564	July 20, 1988	1	205	57.0	239	52	10.6	0.02	0.01	7.1	3.8	6.95	1.5
34565		2	185	40.5	131	54	7.6	0.03	0.01	5.0	2.0	7.29	1.0
34566		3	145	26.4	89.9	41	2.6	3.72	0.29	<5.0	4.1	7.42	1.0
34567		4	124	14.4	50.2	10	<0.5	5.52	0.30	<5.0	4.8	7.52	1.0
34568*		5	117	9.9	41.4	16	<0.5	5.64	0.25	<5.0	6.0	7.35	1.0
34603	July 21, 1988	1	258	1,080	5,385	3,040	17.7	<0.01	0.03	82,243	0.8	6.10	1.0
34604		2	191	57.0	303	77	7.6	0.02	0.02	12.1	1.0	7.27	1.2
34605		3	138	20.4	66.3	43	2.3	3.23	0.34	<5.0	3.8	7.23	1.0
34606		4	153	4.5	35.3	16	<0.05	5.21	0.33	5.7	4.8	7.34	1.0
34607*		5	142	12.2	35.3	13	<0.5	5.51	0.28	7.1	4.8	7.15	1.0
34646	July 22, 1988	1	174	126	662	110	9.5	1.27	<0.01	5.5	3.2	7.05	0.2
34647		2	186	96.0	374	89	8.5	1.30	0.02	16.5	1.0	7.07	0.5
34648		3	159	45.0	119	45	2.6	2.62	0.41	6.9	4.2	7.13	1.0
34649		4	133	21.0	53.0	25	<0.5	4.01	0.97	5.7	5.8	7.33	1.0
34650*		5	140	28.5	58.3	20	<0.5	4.25	0.58	4.8	7.2	8.45	1.0
34704	July 23, 1988	1	195	51.0	87.7	38	3.9	0.07	0.02	12.4	0.8	7.13	1.0
34705		2	183	57.0	226	53	8.6	0.03	0.02	9.3	7.2	7.15	1.0
34706		3	167	31.5	68.8	34	1.9	1.66	0.44	<5.0	4.8	7.25	1.0
34707		4	142	12.0	41.4	61	0.8	3.38	0.29	<5.0	4.4	7.25	1.5
34708*		5	155	18.6	47.3	17	<0.5	2.98	0.35	<5.0	3.1	7.16	1.5

ISMAEL MARTINEZ JIMENEZ
Químico Licenciado
Estado Libre Asociado de Puerto Rico
LICENCIA NUM. 1488

Reported by: Ismael Martinez
Title: Laboratory Manager

cs

ENVIRONMENTAL QUALITY LABORATORIES, INC. BOX 11458, SANTURCE, PUERTO RICO 00910-1458, TELS. 725-5333, 725-3708

Released by: William Sarriera
Title: General Manager

CLIENT: Hayes, Seay, Mattern & Mattern, Inc.
ADDRESS: 1315 Franklin Road, SW Roanoke, VA. 24016
W.O.# 516-01-01
DATE: August 15, 1988
ATTN: Mr. Robert F. Canova
FACILITY Nav. Sta. Roosevelt Roads, Ceiba/Industrial WWTP

LABORATORY TEST REPORT

TABLE#1 cont.

eqlab ENVIRONMENTAL QUALITY LABORATORIES, INC.

ANALYTICAL TEST RESULTS

EQ LAB SAMPLE #	DATE COLLECTED	SAMPLING POINT	ALK mg/L $CaCO_3$	BOD mg/L	COD mg/L	SS mg/L	NH3-N mg/L	NO3N mg/L	NO2N mg/L	O/GF mg/L	DO mg/L	pH Std. Units	SALINITY 0/00
34713	July 24, 1988	1	213	102	188	69	6.2	<0.01	.0.01	5.0	0.8	6.95	1.0
34714		2	192	48.0	130	59	8.4	0.06	0.02	8.0	0.8	7.28	1.0
34715		3	138	25.5	83.2	30	<0.5	2.11	0.33	<5.0	2.8	7.25	1.0
34716		4	160	14.9	18.7	12	<0.5	3.53	0.36	<5.0	4.6	7.42	1.0
34717*		5	133	13.1	18.7	11	1.2	3.36	0.39	<5.0	4.0	7.18	1.0
34718	July 25, 1988	1	215	132	252	128	15.2	0.01	0.01	9.8	0.8	6.86	1.0
34719		2	183	45.0	141	56	10.6	0.02	0.01	11.2	1.6	7.08	1.0
34720		3	171	43.3	78.6	35	4.0	0.43	0.39	<5.0	1.8	7.26	1.9
34721		4	138	12.1	15.0	10	1.4	3.65	0.46	<5.0	2.6	7.26	1.6
34722*		5	137	19.3	38.4	14	1.5	3.93	0.49	<5.0	3.6	7.22	1.5
34724	July 26, 1988	1	170	105	177	82	9.9	0.01	0.02	< 5.0	0.8	7.16	0.8
34725		2	189	69.0	201	83	11.4	0.03	0.04	38.7	1.8	7.24	2.0
34726		3	161	31.7	71.3	17	<0.5	2.13	0.37	<5.0	4.0	7.23	1.8
34727		4	138	16.1	32.3	18	1.3	3.68	0.43	<5.0	4.2	7.35	1.8
34728*		5	149	17.3	41.4	16	<0.5	3.26	0.35	5.0	7.0	7.10	1.8

ISMAEL MARTINEZ JIMENEZ Químico Licenciado Estado Libre Asociado de Puerto Rico LICENCIA NUM. 1486

cs Reported by: Ismael Martinez
Title: Laboratory Manager

Released by: William Sarriera
Title: General Manager

CLIENT: Hayes, Seay, Mattern & Mattern, Inc.
ADDRESS: 1315 Franklin Road, SW Roanoke, VA. 24016
W.O.# 516-01-01
DATE: August 15, 1988
ATTN: Mr. Robert F. Canova
FACILITY: Nav. Sta. Roosevelt Roads, Ceiba/Industrial WWTP

LABORATORY TEST REPORT

TABLE #2

eqlab ENVIRONMENTAL QUALITY LABORATORIES, INC.

ANALYTICAL TEST RESULTS

EQ LAB SAMPLE #	DATE COLLECTED	SAMPLING POINT	BACF MPN/100ml	CL2R mg/L	CNT mg/L	As µg/L	Cr µg/L	Cu µg/L	Pb µg/L	Hg µg/L	Ni µg/L	Ag µg/L	Zn µg/L
34568	July 20, 1988	5	<20	0.4	0.089	2.2	2.9	10	11	0.8	20	<1	20
34607	July 21, 1988	5	<20	0.6									
34650	July 22, 1988	5	2,400	0.7									
34708	July 23, 1988	5	≥24,000	0.1									
34717	July 24, 1988	5	≥24,000	0.3									
34722	July 25, 1988	5	9,200	0.7									
34728	July 26, 1988	5	110	0.8									

ORGANIC CHLORIDES-TO FOLLOW
NON-PESTICIDES: TO FOLLOW

ISMAEL MARTINEZ JIMENEZ
Químico Licenciado
Estado Libre Asociado de Puerto Rico
LICENCIA NUM. 1486

cs Reported by: Ismael Martinez
Title: Laboratory Manager

Released by: William Sarriera
Title: General Manager

CLIENT: Hayes, Seay, Mattern & Mattern, Inc.
ADDRESS: 1315 Franklin Road, SW Roanoke, VA. 24016
W.O.# 516-01-01
DATE: August 15, 1988
Attn: Mr. Robert F. Canova
Facility: Nav. Sta. Roosevelt Roads, Ceiba/Bundy WWTP

LABORATORY TEST REPORT

TABLE #1

eqlab ENVIRONMENTAL QUALITY LABORATORIES, INC.

ANALYTICAL TEST RESULTS

EQ LAB SAMPLE #	DATE COLLECTED	SAMPLING POINT	ALK mg/L $CaCO_3$	BOD mg/L	COD mg/L	SS mg/L	NH3-N mg/L	NO3N mg/L	NO2N mg/L	O/GF mg/L	DO mg/L	pH Std. Units	SALINITY 0/00
34766	July 27, 1988	1	215	73.1	165	44	14.3	<0.01	<0.01	27.4	0.6	6.97	0.2
34767		2	182	25.6	38.4	9	5.2	0.17	0.05	7.6	1.2	6.85	0.2
34768		3	90.0	3.9	<5.0	<5	<0.5	12.2	0.01	4.2	4.6	7.30	0.2
34769		4	82.0	11.3	5.0	14	<0.5	12.1	0.04	5.0	4.8	8.16	0.2
34789	July 28, 1988	1	222	72.0	213	34	15.6	<0.01	<0.01	56.2	0.4	7.18	0.2
34790		2	20.3	33.0	87.7	15	12.9	0.06	0.02	<5.0	0.8	6.79	0.2
34791		3	93.2	8.4	<5.0	7	<0.5	13.7	0.05	<5.0	5.0	6.95	0.2
34792		4	99.9	<1.0	<5.0	6	<0.5	14.6	0.36	<5.0	4.2	7.10	0.2
34812	July 29, 1988	1	206	63.0	119	21	10.6	<0.01	0.03	<5.0	0.3	6.65	0.2
34813		2	213	39.0	119	15	13.1	<0.01	0.01	<5.0	1.6	6.85	0.2
34814		3	96.6	9.2	22.2	<5.0	<0.5	12.9	0.17	<5.0	5.4	6.91	0.2
34815		4	82.0	7.4	11.3	8	<0.5	12.5	0.16	<5.0	5.6	7.03	0.2
34823	July 30, 1988	1	193	45.0	98.4	17	7.5	0.20	0.02	284	1.2	7.15	0.2
34824		2	176	37.5	73.8	14	7.2	0.20	0.02	<5.0	2.2	6.80	0.2
34825		3	133	9.0	18.7	<5	<0.5	10.9	0.15	<5.0	0.5	7.30	0.2
34826		4	105	6.0	7.5	<5	<0.5	10.7	0.13	<5.0	4.8	7.11	0.2
34827	July 31, 1988	1	156	40.5	123	16	5.7	0.14	0.05	5.1	2.6	6.87	0.28
34828		2	167	12.6	76.2	33	7.1	0.05	0.02	<5.0	2.0	6.85	0.2
34829		3	118	6.9	7.5	20	<0.5	11.6	0.12	<5.0	5	7.27	0.2
34830		4	107	6.2	15.0	<5	<0.5	11.1	0.05	<5.0	5	7.26	0.0

ISMAEL MARTINEZ JIMENEZ Químico Licenciado Estado Libre Asociado de Puerto Rico LICENCIA NUM. 1486

Reported by: Ismael Martinez
Title: Laboratory Manager

cs

Released by: William Sarriera
Title: General Manager

CLIENT: Hayes, Seay, Mattern & Mattern, Inc.
ADDRESS: 1315 Franklin Road, SW Roanoke, VA. 24016
W.O.# 516-01-01
DATE: August 15, 1988
ATTN: Mr. Robert F. Canova
Facility: Nav. Sta. Roosevelt Roads, Ceiba/Bundy WWTP

LABORATORY TEST REPORT

TABLE #1

eqlab ENVIRONMENTAL QUALITY LABORATORIES, INC.

ANALYTICAL TEST RESULTS

EQ LAB SAMPLE #	DATE COLLECTED	SAMPLING POINT	ALK mg/L $CaCO_3$	BOD mg/L	COD mg/L	SS mg/L	NH3-N mg/L	NO3N mg/L	NO2N mg/L	O/GF mg/L	DO mg/L	pH Std. Units	SALINITY 0/00
34848	August 1, 1988	1	224	36.0	130	25	11.4	0.03	<0.01	<5.0	1.6	7.10	0.2
34849		2	187	28.5	66.3	12	9.9	<0.01	<0.01	<5.0	2.2	6.37	0.2
34850		3	93.5	3.4	7.5	<5	<0.5	10.7	0.03	<5.0	5.2	7.32	0.2
34851		4	94.2	1.6	<5.0	<5	<0.5	10.5	0.1	<5.0	5.4	7.90	0.2
34880	August 2, 1988	1	102	42.0	83.2	41	4.0	0.06	0.08	8.4	2.2	6.92	0.2
34881		2	144	21.0	35.3	7	7.2	0.05	0.08	<5.0	1.8	6.70	0.2
34882		3	94.2	3.2	7.5	<5	<0.5	11.01	0.09	<5.0	5.4	7.15	0.2
34883		4	98.7	1.4	<5.0	<5	<0.5	10.8	0.28	<5.0	5.0	7.30	0.2

ISMAEL MARTINEZ JIMENEZ
Químico Licenciado
Estado Libre Asociado de Puerto Rico
LICENCIA NUM. 1486

cs Reported by: Ismael Martinez
Title: Laboratory Manager

Released by: William Sarriera
Title: General Manager

CLIENT: Hayes, Seay, Mattern & Mattern, Inc.
ADDRESS: 1315 Franklin Road, SW Roanoke, VA. 24016
P.O.# 516-01-01
DATE: August 15, 1988
Attn: Mr. Robert F. Canova
Facility: Nav. Sta. Roosevelt Roads, Ceiba/Bundy WWTP

LABORATORY TEST REPORT

TABLE #2

** REVISED ON Sept. 2, 1988

eqlab ENVIRONMENTAL QUALITY LABORATORIES, INC.

A N A L Y T I C A L T E S T R E S U L T S

EQ LAB SAMPLE #	DATE COLLECTED	SAMPLING POINT	BACF MPN/100ml	CL2r mg/L	CNT mg/L	As µg/L	Cr µg/L	Cu µg/L	Pb µg/L	Hg µg/L	Ni µg/L	Ag µg/L	Zn µg/L
34769	July 27, 1988	4	16,000	0.3									
34792	July 28, 1988	4	9,200	0.15	<0.02	<2.0	<2.0	20	19	0.50	<20	<1.0	<5
34815	July 29, 1988	4	2,400	1.2									
34826	July 30, 1988	4	5,400	0.2									
34830	July 31, 1988	4	5,400	0.1									
34851	August 1, 1988	4	24,000	0.3									
34883	August 2, 1988	4	16,000	0.08									

ISMAEL MARTINEZ JIMENEZ
Químico Licenciado
Estado Libre Asociado de Puerto Rico
LICENCIA NUM. 1466

Reported by: Ismael Martinez
Title: Laboratory Manager

Released by: William Sarriera
Title: General Manager

CLIENT: Hayes, Seay, Mattern & Mattern, Inc.
ADDRESS: 1315 Franklin Road, SW Roanoke, VA. 24016
W.O.# 516-01-01
DATE: August 23, 1988
ATTN: Mr. Robert F. Canova
FACILITY: WWTP Capehart

LABORATORY TEST REPORT

TABLE #1

eqlab ENVIRONMENTAL QUALITY LABORATORIES, INC.

A N A L Y T I C A L T E S T R E S U L T S

EQ LAB SAMPLE #	DATE COLLECTED	SAMPLING POINT	ALK mg/L Ca03	BOD mg/L	COD mg/L	SS mg/L	NH3-N mg/L	NO3N mg/L	NO2N mg/L	O/GF mg/L	DO mg/L	pH Std. Units	SALINITY 0/00
34909	August 3, 1988	1	86	101	130	93	7.1	0.01	0.01	10.6	0.2	6.75	0.0
34910		2A	34.4	7.8	22.2	<5	<0.5	9.28	0.02	<5.0	4.8	6.02	0.0
34911		3	29.1	4.8	11.3	<5	<0.5	8.80	<0.01	<5.0	4.0	5.88	0.0
34940	August 4, 1988	1	93.5	64.5	226	110	6.8	0.02	<0.01	13.8	0.8	6.88	0.1
34941		2A	33.0	3.6	15.5	9	<0.5	8.75	<0.01	6.5	2.8	6.10	0.1
34942		3	29.1	3.2	22.2	<5	<0.5	9.16	<0.01	6.1	3.0	6.30	0.1
34985	August 5, 1988	1	86.0	186	447	96	7.0	0.02	<0.01	11.1	0.8	7.10	0.1
34986		2A	33.7	4.8	18.7	10	<0.5	7.94	<0.01	<5.0	4.0	6.15	0.1
34987		3	31.4	4.2	25.6	11	<0.5	7.94	<0.01	<5.0	3.4	8.26	0.1
35004	August 6, 1988	1	91.3	52.5	201	92	<0.5	0.04	0.01	15.5	1.2	7.33	0.0
35005		2A	53.9	3.9	<5.0	11	<0.5	8.75	0.01	<5.0	3.8	6.37	0.0
35006		3	50.9	5.0	15.0	9	<0.5			<5.0	4.0	6.25	0.0
35009	August 7, 1988	1	102	180	693	58	7.86	0.03	<0.01	9.5	0.6	6.69	0.0
35010		2B	44.9	3.6	15.0	4	<0.5	1.20	0.02	<5.0	4.0	6.08	0.0
35011		3	39.6	5.1	18.7	20	<0.5	1.20	0.02	<5.0	3.0	6.15	0.0
35017	August 8, 1988	1	92.8	222	402	216	8.9	0.04	0.02	19.1	1.0	6.98	0.0
35018		2B	29.2	3.6	22.2	<5.0	<0.5	11.2	0.04	<5.0	3.6	6.09	0.0
35019		3	30.7	5.7	15.0	13.0	<0.5	8.8	0.02	<5.0	3.8	6.06	0.0
35042	August 9, 1988	1	83.8	99.3	177	104	8.0	<0.01	0.02	20.6	1.0	6.88	0.0
35043		2B	41.9	4.0	25.6	<5.0	<0.5	11.1	0.08	<5.0	3.0	6.05	0.0
35044		3	38.1	6.0	32.1	8.0	<0.5	9.67	0.02	<5.0	4.0	6.14	0.0

ISMAEL MARTINEZ JIMENEZ Químico Licenciado Estado Libre Asociado de Puerto Rico LICENCIA

Reported by: Ismael Martinez
Title: Laboratory Manager

cs

ENVIRONMENTAL QUALITY LABORATORIES, INC. BOX 11458, SANTURCE, PUERTO RICO 00910-1458, TELS. 725-5333, 725-3708

Released by: William Sarriera
Title: General Manager

CLIENT: Hayes, Seay, Mattern & Mattern, Inc.
ADDRESS: 1315 Franklin Road, SW Roanoke, VA. 24016
W.O.# 516-01-01
DATE: August 23, 1988
ATTN: Mr. Robert F. Canova
FACILITY: WWTP Capehart

LABORATORY TEST REPORT

TABLE #2

eqlab ENVIRONMENTAL QUALITY LABORATORIES, INC

ANALYTICAL TEST RESULTS

EQ LAB SAMPLE #	DATE COLLECTED	SAMPLING POINT	BACF MPN/100ml	CL2R mg/L	CNT mg/L	As µg/L	Cr µg/L	Cu µg/L	Pb µg/L	Hg µg/L	Ni µg/L	Ag µg/L	Zn µg/L
34911	August 3, 1988	3	<20	0.35									
34942	August 4, 1988	3	70	0.45									
34987	August 5, 1988	3	<20	0.40									
35006	August 6, 1988	3	<20	0.55	<0.02	6.0	<20	<10	< 50	<0.20	30	1	15
35011	August 7, 1988	3	16,000	0.10									
35019	August 8, 1988	3	3,500	0.15									
35044	August 9, 1988	3	16,000	0.08									

ISMAEL MARTINEZ JIMENEZ Químico Licenciado Estado Libre Asociado de Puerto Rico LICENCIA NUM. 1489 086188

Reported by: Ismael Martinez
cs Title: Laboratory Manager

Released by: William Sarriera
Title: General Manager

LABORATORY TEST REPORT

eqlab
ENVIRONMENTAL QUALITY LABORATORIES, INC.

- Hayes, Seay, Mattern & Mattern, Inc.
  1315 Franklin Road, SW
- Roanoke, VA. 24016
  Attn: Mr. Robert F. Canova

Date: August 26, 1988
Page 1 **of** 1

EQ LAB	CLIENT
W.O.#: 516-01-01 D.S.#: 129238 Date Sample Collected/~~Received~~: August 6, 1988	Facility: Roanoke P.O.#: Date Sample Collected:

Sample #:	Source:	Description:
35008	Capehart-Areation Tank #III	Waste water-Grab

SAMPLE #	PARAMETERS	RESULTS	UNIT	REMARKS
35008	Dissolved Oxygen	3.6	mg/L	
	Mixed Liquor Total Solids	2,100	mg/L	
	Mixed Liquor Volatile Solids	1,200	mg/L	

ISMAEL MARTINEZ JIMENEZ
Unico Licenciado
$1.00 $1.00
Estado Asociado de Puerto Rico
LICENCIA NUM. 1486

Reported by: Ismael Martinez
Title: Laboratory Manager

Released by: William Sarriera
Title: General Manager

cs

LABORATORY TEST REPORT

eqlab
ENVIRONMENTAL QUALITY LABORATORIES, INC.

- Hayes, Seay, Mattern & Mattern, Inc.
- 1315 Franklin Road, SW
  Roanoke, VA. 24016
- Attn: Mr. Robert F. Canova

- Date: September 22, 1988
  Page 1 of 2

EQ LAB	CLIENT
W.O.#: 516-01-01 D.S.#: 129129,128 Date Sample Collected/~~Received~~: August 3, 1988	Facility: Roanoke, VA. P.O.#: Date Sample Collected:
Sample #: See below Source: See remarks	Description: Wastewater-Grab

SAMPLE #	PARAMETERS	RESULTS	UNIT	REMARKS
34917	Mixed Liquor Total Solids	2,600	mg/L	Areation Tank #I
	Mixed Liquor Volatile Solids	1,700	mg/L	" "
	Dissolved Oxygen	4.6	mg/L	" "
34918	Mixed Liquor Total Solids	1,600	mg/L	Areation Tank #II
	Mixed Liquor Volatile Solids	1,000	mg/L	" "
	Dissolved Oxygen	2.2	mg/L	" "

ISMAEL MARTINEZ JIMENEZ
Químico Licenciado
Estado Libre Asociado de Puerto Rico
LICENCIA NUM. 1486

Reported by: Ismael Martinez
Title: Laboratory Manager

Released by: William Sarriera
Title: General Manager

CS

eqlab
ENVIRONMENTAL QUALITY LABORATORIES, INC.

CLIENT: HAYES, SEAY, MATTERN & MATTERN, INC.
ADDRESS: 1315 Franklin Road, SW
Roanoke, VA. 24016
ATTN: Mr. Robert F.Canova
DATE: Aug. 26, 1988
SOURCE: # 34568- Industrial WWTP Effluent
DATE COLLECTED: # 34568- July 20, 1988

W.O. # 516-01-01
FACILITY: Roanoke
SOURCE: See Below
DATE COLLECTED: See below
DESCRIPTION: Wastewater
SOURCE: # 34792- Bundy WWTP Effluent
DATE COLLECTED: # 34792-July 28, 1988

ANALYTICAL TEST RESULTS

PARAMETER	UNITS	EQL SAMPLE # 34568	EQL SAMPLE # 34792
Pesticides			
LINDANE	ug/L	<0.2	<0.2
CHLORDANE	ug/L	<2.5	<2.5
VAPONA	ug/L	<0.5	<0.5
ABATE	ug/L	<50	<50
DURSBAN	ug/L	<0.10	<0.10
BAYGON	ug/L	<1.0	<1.0
DIURON	ug/L	<0.5	<0.5
FICAM	ug/L	<20	<20
DIAZINON	ug/L	<0.05	<0.05
MALATHION	ug/L	<0.10	<0.10
2,4-D	ug/L	<100	<100
2,4,5-TP	ug/L	<10	<10
Volatiles			
1,1,1-TRICHLOROETHANE	ug/L	<1	<1
TRICHLOROETHYLENE	ug/L	<1	<1
P-XYLENE	ug/L	<1	<1
O-XYLENE	ug/L	<1	<1
M-XYLENE	ug/L	<1	<1
TETRACHLOROETHYLENE	ug/L	<1	<1
TOLUENE	ug/L	<1	<1
BENZENE	ug/L	<1	<1
P-DICHLOROBENZENE	ug/L	<1	<1

ISMAEL MARTINEZ JIMENEZ
Químico Licenciado
Estado Libre Asociado de Puerto Rico
LICENCIA NUM. 1486

REPORTED BY: Ismael Martinez
TITLE: Laboratory Manager

RELEASED BY: William Sarriera
TITLE: General Manager

cs

LABORATORY TEST REPORT

Hayes, Seay, Mattern & Mattern, Inc.
1315 Franklin Road, SW
Roanoke, VA. 24016
Attn: Mr. Robert F. Canova

eqlab
ENVIRONMENTAL QUALITY LABORATORIES, INC.

Date: September 6, 1988
Page 1 **of** 1

EQ LAB	CLIENT
W.O.#: 516-01-01 D.S.#: 129236 Date Sample Collected/~~Received~~: August 6, 1988	Facility: Roanoke P.O.#: Date Sample Collected:

Sample #:	Source:	Description: Wastewater
35006	Capehart point #3 manhole downstream of chlorine contact tank.	

SAMPLE #	PARAMETERS	RESULTS	UNIT	REMARKS
35006	PESTICIDES			
	Lindane	< 4	µg/L	
	Chlordane	< 2.5	µg/L	
	Vapona	< 0.50	µg/L	
	Abate	< 50	µg/L	
	Dursban	< 0.10	µg/L	
	Baygon	< 1	µg/L	
	Diuron	< 0.5	µg/L	
	Ficam	< 20	µg/L	
	Diazinon	< 0.05	µg/L	
	Malathion	< 0.10	µg/L	
	2,4-D	< 10.0	µg/L	
	2,4,5-TP	< 1.0	µg/L	
	VOLATILES			
	1,1,1- Trichloroethane	< 1	µg/L	
	Trichloroethylene	< 1	µg/L	
	P-Xylene	< 1	µg/L	
	O-Xylene	< 1	µg/L	
	M-Xylene	< 1	µg/L	
	Tetrachloroethylene	< 1	µg/L	
	Toluene	< 1	µg/L	
	Benzene	< 1	µg/L	
	P-Dichlorobenzene	< 1	µg/L	

ISMAEL MARTINEZ JIMENEZ
Químico Licenciado
Estado Libre Asociado de Puerto Rico
LICENCIA NUM. 148

Reported by: Ismael Martinez
Title: Laboratory Manager

Released by: William Sarriera
Title: General Manager

cs

LABORATORY TEST REPORT

eqlab
ENVIRONMENTAL QUALITY LABORATORIES, INC.

Hayes, Seay, Mattern & Mattern, Inc.
1315 Franklin Road, SW
Roanoke, VA. 24016
Attn: Mr. Robert F. Canova

Date: September 22, 1988
Page 2 **of** 2

EQ LAB	CLIENT
W.O.#: 516-01-01 **D.S.#:** 129236 **Date Sample Collected/~~Received~~:** August 6, 1988	**Facility:** Roanoke, VA. **P.O.#:** **Date Sample Collected:**

Sample #: 35006 **Source:** Capehart point #3 Manhole downstream of chlorine contact tank **Description:** Wastewater

SAMPLE #	PARAMETERS	RESULTS	UNIT	REMARKS
35006	Total Alkalinity	50.9	mg/L as $CaCO_3$	Composite
	Fecal Coliform	<20	MPN/100ml	Composite
	Biochemical Oxygen Demand	5.0	mg/L	Composite
	Chlorine Residual	0.55	mg/L	Composite
	Chemical Oxygen Demand	15.0	mg/L	Composite
	Dissolved Oxygen	4.0	mg/L	Grab
	Oil and Grease	<5.0	mg/L	Grab
	pH	6.25	pH Units	Grab
	Salinity	0.0	0/00 S	Composite
	Ammonia-N	<0.5	mg/L	Composite
	Nitrate-N	8.74	mg/L	Composite
	Nitrite-N	0.01	mg/L	Composite
	Total Cyanide	<0.02	mg/L	Composite
	Total Suspended Solids	9	mg/L	Composite
	Total Arsenic	6.0	µg/L	Composite
	Total Chromium	<20	µg/L	Composite
	Total Copper	<10	µg/L	Composite
	Total Lead	50	µg/L	Composite
	Total Mercury	<0.20	µg/L	Composite
	Total Nickel	30	µg/L	Composite
	Total Silver	1	µg/L	Composite
	Total Zinc	15	µg/L	Composite

Reported by: Annie Ortiz
Title: Microbiologist

Reported by: Ismael Martínez
Title: Laboratory Manager

Released by: William Sarriera
Title: General Manager

cs

LABORATORY TEST REPORT

eqlab
ENVIRONMENTAL QUALITY LABORATORIES, INC.

Hayes, Seay, Mattern & Mattern, Inc.
1315 Franklin Road, SW
Roanoke, VA. 24016
Attn: Mr. Robert F. Canova

Date: August 11, 1988

EQ LAB	CLIENT
W.O.#: 516-01-01 D.S.#: 128178 Date Sample Collected/~~Received~~ July 23, 1988	Facility: Roanoke P.O.#: Date Sample Collected:

Sample #:	Source:	Description:
34709	Drying Bed	Sludge sample-Grab

SAMPLE #	PARAMETERS	RESULTS	UNIT	REMARKS
34709	EP PESTICIDES			
	Endrin	<0.02	mg/L	Method 8080*
	Lindane	<0.4	mg/L	Method 8080*
	Methoxychlor	<10.0	mg/L	Method 8080*
	Toxaphene	<0.5	mg/L	Method 8080*
	EP HERBICIDES			
	2,4-D	<10.0	mg/L	Method 8150*
	2,4,5-TP (Silvex)	<1.0	mg/L	Method 8150*
	EP METALS			
	Total Arsenic	<2.0	µg/L	Method 7061*
	Total Barium	400	µg/L	Method 7080*
	Total Cadmium	<2.0	µg/L	Method 7130*
	Total Chromium	23.9	µg/L	Method 7190*
	Total Lead	22	µg/L	Method 7420*
	Total Mercury	5	µg/L	Method 7470*
	Total Selenium	<2.0	µg/L	Method 7741*
	Total Silver	<1.0	µg/L	Method 7760*

*SW 846

ISMAEL MARTINEZ JIMENEZ
Químico Licenciado
Estado Libre Asociado de Puerto Rico
LICENCIA NUM. 1486

Reported by: Ismael Martinez
Title: Laboratory Manager

Released by: William Sarriera
Title: General Manager

cs

LABORATORY TEST REPORT

eqlab
ENVIRONMENTAL QUALITY LABORATORIES, INC.

Hayes, Seay, Mattern & Mattern, Inc.
1315 Franklin Road, SW
Roanoke, VA. 24016
Attn: Mr. Robert F. Canova

Date: August 12, 1988

EQ LAB	CLIENT
W.O.#: 516-01-01 D.S.#: 128178 Date Sample Collected/~~Received~~: July 23, 1988	Facility: Roanoke P.O.#: Date Sample Collected:

Sample #:	Source:	Description:
34709	Drying Bed	Sludge sample-Grab

SAMPLE #	PARAMETERS	RESULTS	UNIT	REMARKS
34709	CORROSIVITY			
	pH	6.86	pH Units	measured in 0.01M $CaCl_2$ Method 9045*
	IGNITABILITY			
	Ignitability	Does not Ignite at ambient temperature and pressure		
	REACTIVITY			
	Total Cyanide	<1.0	mg/Kg	Method 9010*
	Total Sulfide	488	mg/Kg	Method 9010*

*SW 846

ISMAEL MARTINEZ JIMENEZ
Químico Licenciado
$1.00 $1.00
Asociado de Puerto Rico
LICENCIA NUM. 1456

Reported by: Ismael Martinez
Title: Laboratory Manager

Released by: William Sarriera
Title: General Manager

cs

LABORATORY TEST REPORT

HAYES SEAY MATTERN & MATTERN, INC.
1315 FRANKLIN ROAD, SW
ROANOKE, VA. 24016
ATTN: MR. ROBERT F. CANOVA

eqlab
ENVIRONMENTAL QUALITY LABORATORIES, INC.

Date: August 30, 1988
Page 1 **of** 2

EQ LAB	CLIENT
W.O.#: 516-01-01 **D.S.#:** 129237 **Date Sample Collected/Received:** August 6, 1988	**Facility:** **P.O.#:** **Date Sample Collected:**

Sample #:	**Source:**	**Description:**
35007	Cope Hart Drying Bed	Sample Solid Grab

SAMPLE #	PARAMETERS	RESULTS	UNIT	REMARKS
35007	EP PESTICIDES			
	Endrin	<0.02	mg/L	Method 8080*
	Lindane	<0.4	mg/L	Method 8080*
	Methoxychlor	<10.0	mg/L	Method 8080*
	Toxaphene	< 0.5	mg/L	Method 8080*
	EP HERBICIDES			
	2,4-D	<10.0	mg/L	Method 8150*
	2,4,5-TP (Silvex)	<1.0	mg/L	Method 8150*
	EP METALS			
	Total Arsenic	<20	µg/L	Method 7061*
	Total Barium	200	µg/L	Method 7080*
	Total Cadmium	30	µg/L	Method 7130*
	Total Chromium	<2.0	µg/L	Method 7190*
	Total Lead	99	µg/L	Method 7420*
	Total Mercury	5.8	µg/L	Method 7470*
	Total Selenium	<20	µg/L	Method 7741*
	Total Silver	<1	µg/L	Method 7760*

ISMAEL MARTINEZ JIMENEZ
Químico Licenciado
Estado Libre Asociado de Puerto Rico
LICENCIA NUM. 1486

Reported by: Ismael Martinez
Title: Laboratory Manager

Released by: William Sarriera
Title: General Manager

mm

LABORATORY TEST REPORT

HAYES SEAY MATTERN & MATTERN, INC.
1315 FRANKLIN ROAD, SW
ROANOKE, VA. 24016
ATTN: MR. ROBERT F. CANOVA

eqlab
ENVIRONMENTAL QUALITY LABORATORIES, INC.

Date: August 30, 1988
Page 2 **of** 2

EQ LAB	CLIENT
W.O.#: 516-01-01 **D.S.#:** 129237 **Date Sample Collected/Received:** August 6, 1988	**Facility:** **P.O.#:** **Date Sample Collected:**

Sample #:	Source:	Description:
35007	Cope Hart Drying Bed	Sample Solid Grab

SAMPLE #	PARAMETERS	RESULTS	UNIT	REMARKS
35007	CORROSIVITY			
	pH	6.54	pH Units	Method 9045*
	IGNITABILITY			
	Ignitability	Does not Ignite at ambient temperature and pressure		Method 40CFR 261,21
	REACTIVITY			
	Total Cyanide	<1.0	mg/kg	Method 9010*
	Total Sulfide	<1.0	mg/kg	Method 9010*

ISMAEL MARTINEZ JIMENEZ
Químico Licenciado
Estado Libre Asociado de Puerto Rico
LICENCIA NUM. 1486

Reported by: Ismael Martinez
Title: Laboratory Manager

Released by: William Sarriera
Title: General Manager

mm

AUG 3 1 1988

LABORATORY TEST REPORT

eqlab
ENVIRONMENTAL QUALITY LABORATORIES, INC.

- HAYES, SEAY MATTERN & MATTERN, INC.
  1315 FRANKLIN ROAD, SW
- ROANOKE, VA. 24016
  ATTN: MR. ROBERT F. CANOVA

Date: August 17, 1988
Page 1 **of** 2

REVISED

EQ LAB	CLIENT
W.O.#: 516-01-01 D.S.#: 127965 Date Sample Collected/~~Received~~: July 30, 1988	Facility: P.O.#: Date Sample Collected:

Sample #:	Source:	Description:
34822	Bundy WWTP Drying Bed	Dewatered Sludge

SAMPLE #	PARAMETERS	RESULTS	UNIT	REMARKS
34822	EP PESTICIDES			
	Endrin	<0.02	mg/L	Method 8080*
	Lindane	<0.4	mg/L	Method 8080*
	Methoxychlor	<10.0	mg/L	Method 8080*
	Toxaphene	<0.5	mg/L	Method 8080*
	EP HERBICIDES			
	2,4-D	<10.0	mg/L	Method 8150*
	2,4,5-TP	<1.0	mg/L	Method 8150*
	EP METALS			
	Total Arsenic	<2.0	µg/L	Method 7061*
	Total Barium	600	µg/L	Method 7080*
	Total Cadmium	39.5	µg/L	Method 7130*
	Total Chromium	20	µg/L	Method 7190*
	Total Lead	45	µg/L	Method 7420*
	Total Mercury	<2.0	µg/L	Method 7470*
	Total Selenium	<2.0	µg/L	Method 7741*
	Total Silver	<1	µg/L	Method 7760*

*SW 846

ISMAEL MARTINEZ JIMENEZ
Químico Licenciado
Asociado de Puerto Rico
LICENCIA NUM. 1486

Reported by: Ismael Martinez
Title: ~~Laboratory~~ Manager

Released by: William Sarriera
Title: General Manager

mm

LABORATORY TEST REPORT

HAYES, SEAY MATTERN & MATTERN, INC.
1315 FRANKLIN ROAD, SW
ROANOKE, VA. 24016
ATTN: MR. ROBERT F. CANOVA

eqlab
ENVIRONMENTAL QUALITY LABORATORIES, INC.

Date: August 17, 1988
Page 2 **of** 2

REVISED

EQ LAB	CLIENT
W.O.#: 516-01-01 D.S.#: 127965 Date Sample Collected/Received: July 30, 1988	Facility: P.O.#: Date Sample Collected:

Sample #:	Source:	Description:
34822	Bundy WWTP Drying Bed	Dewatered Sludge

SAMPLE #	PARAMETERS	RESULTS	UNIT	REMARKS
	CORROSIVITY			
	pH	6.27	pH Units	Method 9045
	IGNITABILITY			
	Ignitability	Does not Ignite at ambient temperature and pressure		Method 40 CFR 261,21
	REACTIVITY			
	Total Cyanide	<1.0	mg/kg	Method 9010*
	Total Sulfide	17.7	mg/kg	Method ~~9010*~~ 9030*

*SW 846

ISMAEL MARTINEZ JIMENEZ
Químico Licenciado
Estado Libre Asociado de Puerto Rico
LICENCIA NUM. 1486

Reported by: Ismael Martinez
Title: Laboratory Manager

Released by: William Sarriera
Title: General Manager

mm

LABORATORY TEST REPORT

eqlab
ENVIRONMENTAL QUALITY LABORATORIES, INC.

HAYES SEAY, MATTERN & MATTERN, INC.
1315 FRANKLIN ROAD, SW
ROANOKE, VA 24016
ATTN: MR. ROBERT F. CANOVA

Date: October 19, 1988
Page 1 **of** 1

EQ LAB	CLIENT
W.O.#: 516-01-01 **D.S.#:** 125358,356,357 **Date Sample Collected/Received:** October 6, 1988	**Facility:** Roanoke **P.O.#:** **Date Sample Collected:**
Sample #: See below **Source:** See below	**Description:** Wastewater Grab

EQL SAMPLE #	DATE COLLECTED	SOURCE	TEST RESULTS (µg/L) Total Copper	Total Lead	Total Nickel	Total Mercury
36290	10/06/88	Capehart WTP#3	10	<5	<20	
36291	10/06/88	Tap Water Industrial WTP	<10	<5	<20	
36292	10/06/88	Bundy WTP #4	<10	<5	20	<0.20
36293	10/06/88	Industrial WTP#5	<10	<5	<20	
		Industrial WTP#5 Soluble	<10	<5	<20	

ISMAEL MARTINEZ JIMENEZ
Químico Licenciado
Asociado de Puerto Rico
LICENCIA NUM. 4 P

Reported by: Ismael Martinez
Title: Laboratory Manager

Released by: William Sarriera
Title: General Manager

mm

APPENDIX 6

Analytical Results, Centec Analytical Services, Inc.

CAS
CENTEC ANALYTICAL SERVICES, INC.

P.O. Box 956
2160 INDUSTRIAL DRIVE
SALEM, VIRGINIA 24153
(703) 387-3995

—ANALYTICAL RESULTS REPORT—

Mr. Robert Canova, Vice President
HAYES, SEAY, MATTERN & MATTERN
1315 Franklin Road, SW
Post Office Box 13446
Roanoke, Virginia 24034

RE: Roosevelt Roads, Puerto Rico
Wastewater Analysis
CAS Commission No. 6554

REPORT DATE/NUMBER: 21 September 1988 / 50

SAMPLES COLLECTED BY: HSMM Personnel

SAMPLES RECEIVED IN LAB: 27 July 1988: 1330
29 July 1988: 1000
05 August 1988: 0930

METHOD OF ANALYSIS: RE: 40 CFR, Part 136

NOTE * Please see following pages for analytical results.

If we may be of further service or assistance, please advise.

Prepared by:

CENTEC ANALYTICAL SERVICES

Lewis Pillis, Laboratory Manager

LP/bd

HSMM Roosevelt Roads, Puerto Rico Project

Sample Date	HSMM ID	CAS ID	Alkalinity mg/l	BOD-5 mg/l	COD mg/l	Salinity g/Kg	TSS mg/l	Ammonia mg/l	Nitrate mg/l	Nitrite mg/l	O&G mg/l	Cyanide mg/l
7/26/88	1	77350	205	35		4.7	96			< 0.1		
7/26/88	2	77351			415			10	< 0.1			
7/26/88	3	77352									25	
7/26/88	4	77353	197	16		5.1				< 0.1		
7/26/88	5	77354			250			12	< 0.1			
7/26/88	6	77355									79	
7/26/88	7	77356	140	8		3.8	27			< 0.1		
7/26/88	8	77357			155			1.4	3.3			
7/28/88	9	77407	220	72			52			< 0.1		
7/28/88	10	77408			190			16	< 0.01			
7/28/88	11	77409									164	
7/28/88	12	77410	207	24			64			< 0.1		
7/28/88	13	77411			140			13	0.02			
7/28/88	14	77412	146	7			11			< 0.1		
7/28/88	15	77413			60			0.1	15.6			
7/28/88	16	77414										0.02
8/04/88	1	77635	81	44			3			< 0.01		
8/04/88	2	77636			230			6.4	<0.01			
8/04/88	3	77637									21	
8/04/88	4	77638	25	8			6			< 0.01		
8/04/88	5	77639			80			<0.1	10.3			

			Silver mg/l	Arsenic mg/l	Chromium mg/l	Copper mg/l	Mercury mg/l	Nickel mg/l	Lead mg/l	Zinc mg/l
7/28/88	16	77414	< 0.006	0.011	<0.010	0.02	<0.0002	< 0.025	<0.005	0.054
7/28/88	17	77415	Please see the attachment for the results from organic analyses.							
7/28/88	18	77416	Please see the attachment for the results from organic analyses.							

CAS
CENTEC ANALYTICAL SERVICES, INC.

AnalyticalTechnologies,Inc.

ATI I.D. 808030

ANALYTICAL SCHEDULE

CLIENT: CENTEC ANALYTICAL SERVICES, INC. PROJECT NO.: (NONE)
PROJECT NAME: (NONE)

ANALYSIS	TECHNIQUE	REFERENCE/METHOD
VOLATILE HALOCARBONS	GC/HALL	EPA 601
VOLATILE AROMATICS	GC/PID	EPA 602
PESTICIDES AND POLY-CHLORINATED BIPHENYLS	GC/ECD	EPA 608
ORGANOPHOSPHORUS PESTICIDES	GC/NPD	EPA 614
CHLORINATED HERBICIDES	GC/ECD	EPA 615
CARBAMATES AND UREA PESTICIDES	HPLC	EPA 632

AnalyticalTechnologies,Inc.

CLIENT : CENTEC ANALYTICAL SERVICES, INC. DATE RECEIVED : 08/01/88
PROJECT # : (NONE)
PROJECT NAME : (NONE) REPORT DATE : 09/13/88

ATI I.D. : 808030

ATI #	CLIENT DESCRIPTION	MATRIX	DATE COLLECTED
01	(NO I.D.)	WATER	07/28/88
02	TRIP BLANK	WATER	07/28/88

----- TOTALS -----

MATRIX	# SAMPLES
WATER	2

ATI STANDARD DISPOSAL PRACTICE

The samples from this project will be disposed of in thirty (30) days from the date of this report. If an extended storage period is required, please contact our sample control department before the scheduled disposal date.

AnalyticalTechnologies,Inc. GAS CHROMATOGRAPHY - RESULTS

ATI I.D. : 80803001

TEST : EPA METHODS 601/602

CLIENT	: CENTEC ANALYTICAL SERVICES, INC.	DATE SAMPLED	: 07/28/88
PROJECT #	: (NONE)	DATE RECEIVED	: 08/01/88
PROJECT NAME	: (NONE)	DATE EXTRACTED	: N/A
CLIENT I.D.	: (NO I.D.)	DATE ANALYZED	: 08/10/88
SAMPLE MATRIX	: WATER	UNITS	: UG/L
		DILUTION FACTOR	: 1

COMPOUNDS	RESULTS
BENZENE	<0.5
BROMODICHLOROMETHANE	7.4
BROMOFORM	<0.2
BROMOMETHANE	<0.2
CARBON TETRACHLORIDE	<0.2
CHLOROBENZENE	<0.5
CHLOROETHANE	<0.2
CHLOROFORM	12
CHLOROMETHANE	<0.2
DIBROMOCHLOROMETHANE	4.6 *
1,2-DICHLOROBENZENE	<0.5
1,3-DICHLOROBENZENE	<0.5
1,4-DICHLOROBENZENE	<0.5
DICHLORODIFLUOROMETHANE	<0.2
1,1-DICHLOROETHANE	<0.2
1,2-DICHLOROETHANE	<0.2
1,1-DICHLOROETHENE	<0.2
TRANS-1,2-DICHLOROETHENE	<0.2
1,2-DICHLOROPROPANE	<0.2
CIS-1,3-DICHLOROPROPENE	<0.2
TRANS-1,3-DICHLOROPROPENE	<0.2
ETHYLBENZENE	<0.5
METHYLENE CHLORIDE	<2.0
1,1,2,2-TETRACHLOROETHANE	<0.2
TETRACHLOROETHENE	<0.2
TOLUENE	<0.5
1,1,1-TRICHLOROETHANE	<0.2
1,1,2-TRICHLOROETHANE	4.6 *
TRICHLOROETHENE	<0.2
TRICHLOROFLUOROMETHANE	<2.0
VINYL CHLORIDE	<0.2
META XYLENE	<0.5
ORTHO & PARA XYLENE	<0.5

SURROGATE PERCENT RECOVERIES

BROMOCHLOROMETHANE (%)	127
TRIFLUOROTOLUENE (%)	94

* COMPOUNDS CO-ELUTE.

AnalyticalTechnologies,Inc.

GAS CHROMATOGRAPHY - RESULTS

ATI I.D. : 80803002

TEST : EPA METHODS 601/602

CLIENT	: CENTEC ANALYTICAL SERVICES, INC.	DATE SAMPLED	: 07/28/88
PROJECT #	: (NONE)	DATE RECEIVED	: 08/01/88
PROJECT NAME	: (NONE)	DATE EXTRACTED	: N/A
CLIENT I.D.	: TRIP BLANK	DATE ANALYZED	: 08/11/88
SAMPLE MATRIX	: WATER	UNITS	: UG/L
		DILUTION FACTOR	: 1

COMPOUNDS	RESULTS
BENZENE	<0.5
BROMODICHLOROMETHANE	<0.2
BROMOFORM	<0.2
BROMOMETHANE	<0.2
CARBON TETRACHLORIDE	<0.2
CHLOROBENZENE	<0.5
CHLOROETHANE	<0.2
CHLOROFORM	1.5
CHLOROMETHANE	<0.2
DIBROMOCHLOROMETHANE	<0.2
1,2-DICHLOROBENZENE	<0.5
1,3-DICHLOROBENZENE	<0.5
1,4-DICHLOROBENZENE	<0.5
DICHLORODIFLUOROMETHANE	<0.2
1,1-DICHLOROETHANE	<0.2
1,2-DICHLOROETHANE	<0.2
1,1-DICHLOROETHENE	<0.2
TRANS-1,2-DICHLOROETHENE	<0.2
1,2-DICHLOROPROPANE	<0.2
CIS-1,3-DICHLOROPROPENE	<0.2
TRANS-1,3-DICHLOROPROPENE	<0.2
ETHYLBENZENE	<0.5
METHYLENE CHLORIDE	<2.0
1,1,2,2-TETRACHLOROETHANE	<0.2
TETRACHLOROETHENE	<0.2
TOLUENE	<0.5
1,1,1-TRICHLOROETHANE	<0.2
1,1,2-TRICHLOROETHANE	<0.2
TRICHLOROETHENE	<0.2
TRICHLOROFLUOROMETHANE	<2.0
VINYL CHLORIDE	<0.2
META XYLENE	<0.5
ORTHO & PARA XYLENE	<0.5

SURROGATE PERCENT RECOVERIES

BROMOCHLOROMETHANE (%)	113
TRIFLUOROTOLUENE (%)	87

AnalyticalTechnologies, Inc.

GAS CHROMATOGRAPHY - RESULTS

REAGENT BLANK

TEST : EPA METHODS 601/602

		ATI I.D.	: 808030
CLIENT	: CENTEC ANALYTICAL SERVICES, INC.	DATE EXTRACTED	: 08/10/88
PROJECT #	: (NONE)	DATE ANALYZED	: 08/10/88
PROJECT NAME	: (NONE)	UNITS	: UG/L
CLIENT I.D.	: REAGENT BLANK	DILUTION FACTOR	: N/A

COMPOUNDS	RESULTS
BENZENE	<0.5
BROMODICHLOROMETHANE	<0.2
BROMOFORM	<0.2
BROMOMETHANE	<0.2
CARBON TETRACHLORIDE	<0.2
CHLOROBENZENE	<0.5
CHLOROETHANE	<0.2
CHLOROFORM	<0.2
CHLOROMETHANE	<0.2
DIBROMOCHLOROMETHANE	<0.2
1,2-DICHLOROBENZENE	<0.5
1,3-DICHLOROBENZENE	<0.5
1,4-DICHLOROBENZENE	<0.5
DICHLORODIFLUOROMETHANE	<0.2
1,1-DICHLOROETHANE	<0.2
1,2-DICHLOROETHANE	<0.2
1,1-DICHLOROETHENE	<0.2
TRANS-1,2-DICHLOROETHENE	<0.2
1,2-DICHLOROPROPANE	<0.2
CIS-1,3-DICHLOROPROPENE	<0.2
TRANS-1,3-DICHLOROPROPENE	<0.2
ETHYLBENZENE	<0.5
METHYLENE CHLORIDE	<2.0
1,1,2,2-TETRACHLOROETHANE	<0.2
TETRACHLOROETHENE	<0.2
TOLUENE	<0.5
1,1,1-TRICHLOROETHANE	<0.2
1,1,2-TRICHLOROETHANE	<0.2
TRICHLOROETHENE	<0.2
TRICHLOROFLUOROMETHANE	<2.0
VINYL CHLORIDE	<0.2
META XYLENE	<0.5
ORTHO & PARA XYLENE	<0.5

SURROGATE PERCENT RECOVERIES

BROMOCHLOROMETHANE (%)	108
TRIFLUOROTOLUENE (%)	97

AnalyticalTechnologies GAS CHROMATOGRAPHY - RESULTS

ATI I.D. : 80803001

TEST : PESTICIDES/PCB'S (EPA 608)

CLIENT	: CENTEC ANALYTICAL SERVICES, INC.	DATE SAMPLED	: 07/28/88
PROJECT #	: (NONE)	DATE RECEIVED	: 08/01/88
PROJECT NAME	: (NONE)	DATE EXTRACTED	: 08/04/88
CLIENT I.D.	: (NO I.D.)	DATE ANALYZED	: 09/07/88
SAMPLE MATRIX	: WATER	UNITS	: UG/L
		DILUTION FACTOR	: 1

COMPOUNDS	RESULTS
ALDRIN	<0.05
ALPHA BHC	<0.05
BETA BHC	<0.05
GAMMA BHC (LINDANE)	<0.05
DELTA BHC	<0.05
CHLORDANE	<0.5
4,4'-DDD	<0.1
4,4'-DDE	<0.1
4,4'-DDT	<0.1
DIELDRIN	<0.1
ENDOSULFAN I	<0.05
ENDOSULFAN II	<0.1
ENDOSULFAN SULFATE	<0.1
ENDRIN	<0.1
ENDRIN ALDEHYDE	<0.1
HEPTACHLOR	<0.05
HEPTACHLOR EPOXIDE	<0.05
METHOXYCHLOR	<0.5
TOXAPHENE	<1.0
AROCLOR 1016	<0.5
AROCLOR 1221	<0.5
AROCLOR 1232	<0.5
AROCLOR 1242	<0.5
AROCLOR 1248	<0.5
AROCLOR 1254	<1.0
AROCLOR 1260	<1.0

SURROGATE PERCENT RECOVERIES

DBC (%)	9 *

* LOW SURROGATE RECOVERY WAS DUE TO SOLVENT EXCHANGING THE SAMPLE EXTRACT IN METHANOL TO HEXANE.

NOTE: TO CONFIRM THE ABSENCE OF ORGANOCHLORINE PESTICIDES IN THE SAMPLE, THE ORGANOPHOSPHORUS EXTRACT WAS ANALYZED ON 08/31/88.

AnalyticalTechnologies,Inc. GAS CHROMATOGRAPHY - RESULTS

REAGENT BLANK

TEST : PESTICIDES/PCB'S (EPA 608)

		ATI I.D.	: 808030
CLIENT	: CENTEC ANALYTICAL SERVICES, INC.	DATE EXTRACTED	: 08/04/88
PROJECT #	: (NONE)	DATE ANALYZED	: 08/10/88
PROJECT NAME	: (NONE)	UNITS	: UG/L
CLIENT I.D.	: REAGENT BLANK	DILUTION FACTOR	: N/A

COMPOUNDS	RESULTS
ALDRIN	<0.05
ALPHA BHC	<0.05
BETA BHC	<0.05
GAMMA BHC (LINDANE)	<0.05
DELTA BHC	<0.05
CHLORDANE	<0.5
4,4'-DDD	<0.1
4,4'-DDE	<0.1
4,4'-DDT	<0.1
DIELDRIN	<0.1
ENDOSULFAN I	<0.05
ENDOSULFAN II	<0.1
ENDOSULFAN SULFATE	<0.1
ENDRIN	<0.1
ENDRIN ALDEHYDE	<0.1
HEPTACHLOR	<0.05
HEPTACHLOR EPOXIDE	<0.05
METHOXYCHLOR	<0.5
TOXAPHENE	<1.0
AROCLOR 1016	<0.5
AROCLOR 1221	<0.5
AROCLOR 1232	<0.5
AROCLOR 1242	<0.5
AROCLOR 1248	<0.5
AROCLOR 1254	<1.0
AROCLOR 1260	<1.0

SURROGATE PERCENT RECOVERIES

DBC (%)	91

AnalyticalTechnologies,Inc.

QUALITY CONTROL DATA

ATI I.D. : 808030

TEST : PESTICIDES/PCB'S (EPA 608)

CLIENT : CENTEC ANALYTICAL SERVICES, INC.
PROJECT # : (NONE)
PROJECT NAME : (NONE)
REF I.D. : 80803501

DATE ANALYZED : 08/10/88
SAMPLE MATRIX : WATER
UNITS : UG/L

COMPOUNDS	SAMPLE RESULT	CONC. SPIKED	SPIKED SAMPLE	% REC.	DUP. SPIKED SAMPLE	DUP. % REC.	RPD
GAMMA BHC	<0.05	0.40	0.03	7.5	0.02	5	40
HEPTACHLOR	<0.05	0.40	0.02	5	0.03	7.5	40
ALDRIN	<0.05	0.40	0.03	7.5	0.03	7.5	0
DIELDRIN	<0.1	1.0	0.25	25	0.26	26	3.9
ENDRIN	<0.1	1.0	0.28	28	0.30	30	6.9
DDT	<0.1	1.0	0.50	50	0.45	45	11

$$\% \text{ Recovery} = \frac{(\text{Spike Sample Result} - \text{Sample Result})}{\text{Spike Concentration}} \times 100$$

$$\text{RPD (Relative \% Difference)} = \frac{(\text{Spiked Sample Result} - \text{Duplicate Spike Sample Result})}{\text{Average of Spiked Sample}} \times 100$$

AnalyticalTechnologies GAS CHROMATOGRAPHY - RESULTS

ATI I.D. : 80803001

TEST : EPA 614 (PESTICIDES)

CLIENT	: CENTEC ANALYTICAL SERVICES, INC.	DATE SAMPLED	: 07/28/88
PROJECT #	: (NONE)	DATE RECEIVED	: 08/01/88
PROJECT NAME	: (NONE)	DATE EXTRACTED	: 08/04/88
CLIENT I.D.	: (NO I.D.)	DATE ANALYZED	: 08/15/88
SAMPLE MATRIX	: WATER	UNITS	: UG/L
		DILUTION FACTOR	: 1

COMPOUNDS	RESULTS
o-DEMETON	<1.0
s-DEMETON	<1.0
DIAZINON	<1.0
DISULFOTON	<1.0
METHYLPARATHION	<1.0
MALATHION	<2.0
ETHYL PARATHION	<1.0
ETHION	<1.0
AZINPHOSMETHYL (GUTHION)	<5.0

AnalyticalTechnologies GAS CHROMATOGRAPHY - RESULTS

REAGENT BLANK

TEST : EPA 614 (PESTICIDES)

		ATI I.D.	: 808030
CLIENT	: CENTEC ANALYTICAL SERVICES, INC.	DATE EXTRACTED	: 08/04/88
PROJECT #	: (NONE)	DATE ANALYZED	: 08/14/88
PROJECT NAME	: (NONE)	UNITS	: UG/L
CLIENT I.D.	: REAGENT BLANK	DILUTION FACTOR	: N/A

COMPOUNDS	RESULTS
o-DEMETON	<1.0
s-DEMETON	<1.0
DIAZINON	<1.0
DISULFOTON	<1.0
METHYLPARATHION	<1.0
MALATHION	<2.0
ETHYL PARATHION	<1.0
ETHION	<1.0
AZINPHOSMETHYL (GUTHION)	<5.0

AnalyticalTechnologies,Inc.

QUALITY CONTROL DATA

ATI I.D. : 808030

TEST : EPA 614 (PESTICIDES)

CLIENT : CENTEC ANALYTICAL SERVICES, INC.
PROJECT # : (NONE)
PROJECT NAME : (NONE)
REF I.D. : REAGENT WATER

DATE ANALYZED : 08/14/88
SAMPLE MATRIX : WATER
UNITS : UG/L

COMPOUNDS	SAMPLE RESULT	CONC. SPIKED	SPIKED SAMPLE	% REC.	DUP. SPIKED SAMPLE	DUP. % REC.	RPD
DIAZINON	<1.0	12	8.5	71	8.5	71	0
METHYL PARATHION	<1.0	2.2	1.9	86	2.0	91	5
GUTHION	<5.0	32	38	119	43	134	12
ETHYL PARATHION	<1.0	15	13	87	14	93	7

$$\% \text{ Recovery} = \frac{(\text{Spike Sample Result} - \text{Sample Result})}{\text{Spike Concentration}} \times 100$$

$$\text{RPD (Relative \% Difference)} = \frac{(\text{Spiked Sample Result} - \text{Duplicate Spike Sample Result})}{\text{Average of Spiked Sample}} \times 100$$

Analytical Technologies, Inc. GAS CHROMATOGRAPHY - RESULTS

ATI I.D. : 80803001

TEST : CHLORINATED HERBICIDES (EPA 615)

CLIENT	: CENTEC ANALYTICAL SERVICES, INC.	DATE SAMPLED	: 07/28/88
PROJECT #	: (NONE)	DATE RECEIVED	: 08/01/88
PROJECT NAME	: (NONE)	DATE EXTRACTED	: 08/04/88
CLIENT I.D.	: (NO I.D.)	DATE ANALYZED	: 08/18/88
SAMPLE MATRIX	: WATER	UNITS	: UG/L
		DILUTION FACTOR	: 1

COMPOUNDS	RESULTS
2,4-D	<0.4
2,4,5-TP (SILVEX)	<0.2
DICAMBA	<0.4
2,4,5-T*	71%
2,4-DB	<0.4

* This compound was used as a surrogate recovery.

Analytical Technologies, Inc. GAS CHROMATOGRAPHY - RESULTS

REAGENT BLANK

TEST : CHLORINATED HERBICIDES (EPA 615)

		ATI I.D.	: 808030
CLIENT	: CENTEC ANALYTICAL SERVICES, INC.	DATE EXTRACTED	: 08/04/88
PROJECT #	: (NONE)	DATE ANALYZED	: 08/18/88
PROJECT NAME	: (NONE)	UNITS	: UG/L
CLIENT I.D.	: REAGENT BLANK	DILUTION FACTOR	: N/A

COMPOUNDS	RESULTS
2,4-D	<0.4
2,4,5-TP (SILVEX)	<0.2
DICAMBA	<0.4
2,4,5-T *	69%
2,4-DB	<0.4

* This compound was used as a surrogate recovery.

AnalyticalTechnologies, Inc.

QUALITY CONTROL DATA

ATI I.D. : 808030

TEST : CHLORINATED HERBICIDES (EPA 615)

CLIENT : CENTEC ANALYTICAL SERVICES, INC.
PROJECT # : (NONE)
PROJECT NAME : (NONE)
REF I.D. : 80803001

DATE ANALYZED : 08/17/88
SAMPLE MATRIX : WATER
UNITS : UG/L

COMPOUNDS	SAMPLE RESULT	CONC. SPIKED	SPIKED SAMPLE	% REC.	DUP. SPIKED SAMPLE	DUP. % REC.	RPD
2,4-D	<0.4	8.3	10	120	9.5	114	5
2,4,5-TP	<0.2	8.3	9.8	118	9.4	113	4
2,4,5-T	<0.2	8.3	9.7	117	9.4	113	3

$$\% \text{ Recovery} = \frac{(\text{Spike Sample Result} - \text{Sample Result})}{\text{Spike Concentration}} \times 100$$

$$\text{RPD (Relative \% Difference)} = \frac{(\text{Spiked Sample Result} - \text{Duplicate Spike Sample Result})}{\text{Average of Spiked Sample}} \times 100$$

AnalyticalTechnologies GAS CHROMATOGRAPHY - RESULTS

ATI I.D. : 80803001

TEST : CARBAMATE/UREA PESTICIDES (EPA 632)

CLIENT	: CENTEC ANALYTICAL SERVICES, INC.	DATE SAMPLED	: 07/28/88
PROJECT #	: (NONE)	DATE RECEIVED	: 08/01/88
PROJECT NAME	: (NONE)	DATE EXTRACTED	: 08/04/88
CLIENT I.D.	: (NO I.D.)	DATE ANALYZED	: 08/08/88
SAMPLE MATRIX	: WATER	UNITS	: UG/L
		DILUTION FACTOR	: 1

COMPOUNDS	RESULTS
BAYGON	<1.0
BROMACIL	<2.0
CARBARYL	<2.0
CARBOFURAN	<10
CHLORPROPHAM (CIPC)	<2.0
DIURON	<1.0
LINURON	<1.0
METHOMYL	<5.0
NEBURON	<1.0
OXAMYL	<5.0
PROPHAM	<2.0

AnalyticalTechnologies,Inc. GAS CHROMATOGRAPHY - RESULTS

REAGENT BLANK

TEST : CARBAMATE/UREA PESTICIDES (EPA 632)

		ATI I.D.	: 808030
CLIENT	: CENTEC ANALYTICAL SERVICES, INC.	DATE EXTRACTED	: 08/04/88
PROJECT #	: (NONE)	DATE ANALYZED	: 08/08/88
PROJECT NAME	: (NONE)	UNITS	: UG/L
CLIENT I.D.	: REAGENT BLANK	DILUTION FACTOR	: N/A

COMPOUNDS	RESULTS
BAYGON	<1.0
BROMACIL	<2.0
CARBARYL	<2.0
CARBOFURAN	<10
CHLORPROPHAM (CIPC)	<2.0
DIURON	<1.0
LINURON	<1.0
METHOMYL	<5.0
NEBURON	<1.0
OXAMYL	<5.0
PROPHAM	<2.0

AnalyticalTechnologies, Inc.

QUALITY CONTROL DATA

ATI I.D. : 808030

TEST : CARBAMATE/UREA PESTICIDES (EPA 632)

CLIENT : CENTEC ANALYTICAL SERVICES, INC.
PROJECT # : (NONE)
PROJECT NAME : (NONE)
REF I.D. : REAGENT WATER

DATE ANALYZED : 08/08/88
SAMPLE MATRIX : WATER
UNITS : UG/L

COMPOUNDS	SAMPLE RESULT	CONC. SPIKED	SPIKED SAMPLE	% REC.	DUP. SPIKED SAMPLE	DUP. % REC.	RPD
BROMACIL	<2.0	50.0	58	116	57	114	2
NEBURON	<1.0	50.0	57	114	56	112	2
LINURON	<1.0	50.0	60	120	59	118	2
CARBARYL	<2.0	50.0	57	114	57	114	0

$$\% \text{ Recovery} = \frac{(\text{Spike Sample Result} - \text{Sample Result})}{\text{Spike Concentration}} \times 100$$

$$\text{RPD (Relative \% Difference)} = \frac{(\text{Spiked Sample Result} - \text{Duplicate Spike Sample Result})}{\text{Average of Spiked Sample}} \times 100$$

APPENDIX 7

Calculations

PROJECT Study For Elimination of NPDES Violations, Roosevelt Rds, P.R.

TYPE Contract No. N62470-87-C-9009

CONTENTS Index To Calculations

Hayes, Seay, Mattern and Mattern
ARCHITECTS • ENGINEERS • PLANNERS

DATE 18 Oct 88 COMM NO. 1735 A

PREL. ✓ FINAL _____ SHEET NO. 1

CAL. BY RFE CKD. BY _____

CONTENTS

CONTENTS	SHEET NO.
Index to Calculations	1
Industrial Area WTP Capacity	2
Capehart WTP Capacity	10
Bundy WTP Capacity	14
General Design Criteria	20
Industrial WTP - Process Design	23
Capehart WTP - Process Design	38
Bundy WTP - Process Design	48
WTP Construction Cost Estimates	55
Holding Tanks, Oil/Water Separators	71
Industrial Area WTP Collection System Construction Cost Estimates	77
Pilot Study, Trickling Filters, Cost Estimate	80

HSMM Form Prod - 6

EXHIBIT

PROJECT Study For Elimination of NPDES Violations, Roosevelt Rds, P.R.

TYPE Contract No. N62470-87-C-9009

CONTENTS Industrial Area WTP Capacity

Hayes, Seay, Mattern and Mattern
ARCHITECTS • ENGINEERS • PLANNERS

DATE 22 Aug 88 COMM NO. 1735 A

PREL. — FINAL _____ SHEET NO. 2

CAL. BY RFe CKD. BY _____

Summary of Industrial Area Wastewater Treatment Plant Capacity Based on EQB Design Standards

Primary Settling

Depth	= 8' SWD
Design Depth	= 10' - 12'
Surface Area	= 1536 sf
Design Rise Rate	= 600 gpd/sf
Capacity	= .92 mgd
Volume	= 12,288 cf
Design Residence Time	= 3 - 3.6 hours
Capacity	= .74 - .61 mgd
Weir Length	= 27.5 ft
Design Weir Loading	= 10,000 gpd / lf
Capacity	= .275 mgd

Trickling Filter

Depth	= 6 ft
Design Depth	= 3 ft
Surface Area	= 7697 sf
* Hydraulic Load, Intermediate Rate	= 98 - 196 gpd/sf
Capacity	= .75 - 1.51 mgd

* Based on recirculation rate of 650 gpm or < 1:1 ratio

EXHIBIT

HSMM Form Prod - 6

PROJECT Study For Elimination of NPDES Violations, Roosevelt Rds, P.R.

TYPE Contract No. N62470-87-C-9009

CONTENTS Industrial Area WTP Capacity

Hayes, Seay, Mattern and Mattern
ARCHITECTS · ENGINEERS · PLANNERS

DATE 23 Aug 88 COMM NO. 1735A

PREL. ✓ FINAL ____ SHEET NO. 3

CAL. BY RFC CKD. BY ____

Summary of Industrial Area Wastewater Treatment Plant Capacity, Continued

Trickling Filter, Continued

Volume of Media	= 46,182 cf
Design Organic Load, Int. Rate	= 17-30 lb BOD/d/1000 cf
* Capacity	= .67 - 1.19 mgd

* Based on a raw sewage BOD_5 of 200 mg/l with 30% BOD_5 reduction in primary clarifiers

Final Settling

Depth	= 8 ft
Design Depth	= 10-13 ft
Surface Area	= 2340 sf
Design Rise Rate	= 400 gpd/sf
Capacity	= .936 mgd
Volume	= 18,720 cf
Design Residence Time	= 3 hours
Capacity	= 1.12 mgd
Weir Length	= 126 ft
Design Weir Loading	= 10,000 gpd/lf
Capacity	= 1.26 mgd

HSMM Form Prod - 6

EXHIBIT

PROJECT Study For Elimination of NPDES Violations, Roosevelt Rds, P.R.

TYPE Contract No. N62470-87-C-9009

CONTENTS Industrial Area WTP Capacity

Hayes, Seay, Mattern and Mattern
ARCHITECTS • ENGINEERS • PLANNERS

DATE 1 Sep 88 COMM NO. 1735A

PREL. — FINAL ____ SHEET NO. 4

CAL. BY RFC CKD. BY ____

Summary of Industrial Area Wastewater Treatment Plant Capacity, Continued

Chlorine Contact

Volume	= 3604 cf
Design Residence Time	= 30 minutes
Capacity	= 1.29 mgd

Anaerobic Digestion

Volume	= 36,182 cf
Design Volatile Loading	= 80 lb volatile / 1000 cf
* Capacity	= 0.96 mgd

Other Design Conditions:
- Complete Mix
- Multiple Units

* Based on .2 lb volatile / capita and 50 gpd / capita raw sewage and 25% volatile reduction in biological process. Resulting calculation is digester load of 3000 lb volatile / mg raw sewage.

Sludge Drying Beds

Area	= 15,150 sf
Design Area Per Capita	= 1.75 sf/capita
Design Flow Per Capita	= 50 gpcd
Capacity	= 0.43 mgd

EXHIBIT

HSMM Form Prod - 6

PROJECT Study For Elimination of NPDES Violations, Roosevelt Rds, P.R.

TYPE Contract No. N 62470-87-C-9009

CONTENTS Industrial Area WTP Capacity

Hayes, Seay, Mattern and Mattern
ARCHITECTS • ENGINEERS • PLANNERS

DATE 1 Sep 88 COMM NO. 1735 A

PREL. ✓ FINAL ____ SHEET NO. 5

CAL. BY RFC CKD. BY ____

Summary of Industrial Area Wastewater Treatment Plant Capacity, Continued

Summary of Deficiencies

Industrial Area WTP was designed to operate as a 0.937 mgd trickling filter plant. Design deficiencies include:

- Primary Settling Tanks have inadequate depth and volume and significant weir length deficiency
- Final Settling Tanks have inadequate depth.
- Sludge Drying Beds have half the design capacity of the plant
- Digester does not have a multiple unit and is not mixed

HSMM Form Prod - 6

EXHIBIT

PROJECT Study For Elimination of NPDES Violations, Roosevelt Rds, P.R.

TYPE Contract No. N 62470-87-C-9009

CONTENTS Industrial Area WTP Capacity

Hayes, Seay, Mattern and Mattern
ARCHITECTS · ENGINEERS · PLANNERS

DATE 10 Jun 88 COMM NO. 1735A

PREL. — FINAL _____ SHEET NO. 6

CAL. BY RFC CKD. BY _____

Summary of Critical Dimensions of Industrial Area Wastewater Treatment Plant, From Constr. Dwg.

Aerated Lagoon

No. of Units = 1
Dimensions of Each Unit = 100' x 66' x 10' dee, AND 3:1 Slopes
Mechanisms:
- 4 Floating Aerators
- Portable oil collection Skimmers

Primary Settling

No. of Units = 2
Dimensions of Each Unit = 16' x 48' x 8' SWD
Weir Length of Each Unit = 13'-9"
Mechanisms:
- Rectangular Scraper
- Sludge Wells and Draw-off Pipes
- Scum Skimmer Pipe

Trickling Filter

No. of Units = 2
Dimensions of Each Unit = 70' ϕ x 6' Media
Effluent Channel Cross Section = 1'-6" x 12"-20" Dp
Mechanism: 4-Arm Rotary Distributor
Type of Media: Stone

HSMM Form Prod - 6

EXHIBIT

PROJECT Study For Elimination of NPDES Violations, Roosevelt Rds, P.R.

TYPE Contract No. N62470-87-C-9009

CONTENTS Industrial Area WTP Capacity

Hayes, Seay, Mattern and Mattern
ARCHITECTS • ENGINEERS • PLANNERS

DATE 10 Jun 88 COMM NO. 1735A

PREL. ✓ FINAL ____ SHEET NO. 7

CAL. BY RFC CKD. BY ____

Industrial Area Wastewater Treatment Plant Dim, Cont'd

Final Settling

No. of Units = 2
Dimensions of Each Unit = 18' x 65' x 8' SWD
Weir Length of Each Unit = 63'
Mechanisms:
- Rectangular Scraper
- Sludge Wells and Draw-off Pipes
- No Scum Removal

Chlorine Contact

No. of Units = 2
Dimensions of Each Unit = 35' x 8'-7" x 6' SWD
Mechanisms: Concrete Baffling

Anaerobic Digestion

No. of Units = 1
Dimension of Each Unit = 45' ϕ x 22'-9" Max
Mechanisms:
- Floating Cover
- Pressure Relief, No Flame
- No Mixer, No Heat

HSMM Form Prod - 6

EXHIBIT

PROJECT Study For Elimination of NPDES Violations, Roosevelt Rds, P.R.

TYPE Contract No. N62470-87-C-9009

CONTENTS Industrial Area WTP Capacity

Hayes, Seay, Mattern and Mattern
ARCHITECTS • ENGINEERS • PLANNERS

DATE 22 Aug 88 COMM NO. 1735A

PREL. ✓ FINAL ____ SHEET NO. 8

CAL. BY RFC CKD. BY ____

Industrial Area Wastewater Treatment Plant Dim, Cont'd

Sludge Drying Beds

No. of Units = 3
Dimensions of Each Unit = 101' x 50'
Media : Paved
Cover : None

HSMM Form Prod - 6

EXHIBIT

PROJECT Study For Elimination of NPDES Violations, Roosevelt Rds, P.R.

TYPE Contract No. N62470-87-C-9009

CONTENTS Industrial Area WTP Capacity

Hayes, Seay, Mattern and Mattern
ARCHITECTS · ENGINEERS · PLANNERS

DATE 19 Sep 88 COMM NO. 1735 A

PREL. ✓ FINAL ____ SHEET NO. 9

CAL. BY RFe CKD. BY ____

Calculate the Flow Equalization Capacity Provided by the Aerated Lagoon at the Industrial Area WTP

Pumping Rate = 2000 gpm
Aerated Lagoon Dimensions = 178' x 144' x 10' deep
Effluent Pipe = 6", vertical

Consider Effluent Pipe To Be A Weir

Length of Weir = 1.57'
Depth over Weir at 2000 gpm = 0.98

$$Q = 3.33\,(L - 0.2H)\,H^{1.5}$$
$$4.46\,cfs = 3.33\,(1.57 - 0.2H)\,H^{1.5}$$

Volume of Liquid Above Weir = 0.98' x 178' x 144'
= 25,120 cf
= 187,900 gal
= 94 minutes pumping

Thus, the Aerated Lagoon will dampen the effect of the pump on-off cycle for the first 94 minutes of pump operation.

Since present plant flow is 400 gpm, pump only operates (400/2000) 20% of the time; damping of pump on-off cycle will be effective

At plant design flow, pump will operate only (700/2000) 35% of the time; damping of pump on-off cycle will continue to be effective.

HSMM Form Prod - 6

EXHIBIT

PROJECT Study For Elimination of NPDES Violations, Roosevelt Rds, P.R.

TYPE Contract No. N62470-87-C-9009

CONTENTS Capehart WTP Capacity

Hayes, Seay, Mattern and Mattern
ARCHITECTS · ENGINEERS · PLANNERS

DATE 22 Aug 88 COMM NO. 1735A

PREL. ✓ FINAL ____ SHEET NO. 10

CAL. BY RFC CKD. BY ____

Summary of Capehart Wastewater Treatment Plant Capacity Based on EQB Design Standards

Aeration Tanks

Volume	= 65,800 cf
Design Residence Time	= 20-30 hours
Capacity	= .41 - .61 mgd
	= .49 mgd at 24 hr

Settling Tanks

Depth	= 8' SWD
Design Depth	= 12-15'
Surface Area	= 1260 sf
Design Rise Rate	= 300 gpd/sf
Capacity	= .378 mgd
Volume	= 10,080 cf
Design Residence Time	= 3 hours
Capacity	= .60 mgd
Weir Length	= 160 ft
Design Weir Loading	= 10,000 gpd/lf
Capacity	= 1.6 mgd

Chlorine Contact

Volume	= 1500 cf
Design Residence Time	= 30 minutes
Capacity	= .54 mgd

EXHIBIT

HSMM Form Prod - 6

PROJECT Study For Elimination of NPDES Violations, Roosevelt Rds, P.R.

TYPE Contract No. N62470-87-C-9009

CONTENTS Capehart WTP Capacity

Hayes, Seay, Mattern and Mattern
ARCHITECTS • ENGINEERS • PLANNERS

DATE 22 Aug 88 COMM NO. 1735A

PREL. ✓ FINAL ____ SHEET NO. 11

CAL. BY RFe CKD. BY ____

Summary of Capehart Wastewater Treatment Plant Capacity, Continued

Sludge Drying Beds

Area	= 1500 sf
Design Area Per Capita	= 1.75 sf/capita
Design Flow Per Capita	= 50 gpcd
Capacity	= .043 mgd

Summary of Deficiencies

Capehart Area WTP was designed to operate as a 0.46 mgd extended aeration plant. Design deficiencies include:

- Settling Tanks have inadequate depth and surface area
- Sludge Drying Beds have one tenth the design capacity of the plant.

HSMM Form Prod - 6

EXHIBIT

PROJECT Study For Elimination of NPDES Violations, Roosevelt Rds, P.R.

TYPE Contract No. N62470-87-C-9009

CONTENTS Capehart WTP Capacity

Hayes, Seay, Mattern and Mattern
ARCHITECTS · ENGINEERS · PLANNERS

DATE 8 Jun 88 COMM NO. 1735 A

PREL. ✓ FINAL _____ SHEET NO. 12

CAL. BY RFC CKD. BY _____

Summary of Critical Dimensions of Capehart Wastewater Treatment Plant, From Constr. Dwg

Aeration Tanks

No. of Units = 3
Dimensions of Each Unit, 2 = 25' x 54' x 15' SWD
1 = 25' x 67'-6" x 15' SWD

Type of Aeration:
Diffused Air, Swing Diffusers

Settling Tanks

No. of Units = 4
Dimensions of Each Unit = 10' x 31'-6" x 8' SWD
Weir Length of Each Unit = 40'
Mechanisms:
Rectangular Scraper
Sludge Well and Draw-off Pipes
Scum Skimmer Pipe

Chlorine Contact

No. of Units = 4
Dimensions of Each Unit = 10' x 6' x 6'-3" SWD
Mechanisms: Concrete Baffles

HSMM Form Prod - 6

EXHIBIT

PROJECT Study For Elimination of NPDES Violations, Roosevelt Rds, P.R.

TYPE Contract No N62470-87-C-9009

CONTENTS Capehart WTP Capacity

Hayes, Seay, Mattern and Mattern
ARCHITECTS • ENGINEERS • PLANNERS

DATE 8 Jun 88 COMM NO. 1735A

PREL. ✓ FINAL _____ SHEET NO. 13

CAL. BY RFC CKD. BY _____

Capehart Wastewater Treatment Plant Dimensions, Cont'd

Sludge Aeration Tank

No. of Units = 3
Dimensions of Each Unit, 1 = 10' x 12' x 15'-6" SWD
2 = 8' x 11' x 10'-6" SWD

Type of Aeration:
Diffused Air, Swing Diffusers

Sludge Drying Beds

No. of Units = 3
Dimensions of Each Unit = 30' x 16'-8"
Media: Paved
Cover: None

EXHIBIT

HSMM Form Prod - 6

PROJECT Study For Elimination of NPDES Violations, Roosevelt Rds, P.R.

TYPE Contract No. N62470-87-C-9009

CONTENTS Bundy WTP Capacity

Hayes, Seay, Mattern and Mattern
ARCHITECTS • ENGINEERS • PLANNERS

DATE 1 Sep 88 COMM NO. 1735A

PREL. ✓ FINAL ____ SHEET NO. 14

CAL. BY RFe CKD. BY ____

Summary of Bundy Wastewater Treatment Plant Capacity Based on EQB Design Standards

Primary Settling

Depth	= 8' SWD
Design Depth	= 10' - 12'
Surface Area	= 1092 sf
Design Rise Rate	= 600 gpd/sf
Capacity	= 0.655 mgd
Volume	= 8736 cf
Design Residence Time	= 3 - 3.6 hours
Capacity	= .52 - .44 mgd
Weir Length	= 26 ft
Design Weir Loading	= 10,000 gpd / lf
Capacity	= .26 mgd

Trickling Filter

Depth	= 6 ft
Design Depth	= 3 ft
Surface Area	= 5655 sf
* Hydraulic Load, Intermediate Rate	= 98 - 196 gpd/sf
Capacity	= .55 - 1.11 mgd

* Based on recirculation rate of 450 gpm ≃ 1:1 ratio

HSMM Form Prod - 6

EXHIBIT

PROJECT Study For Elimination of NPDES Violations, Roosevelt Rds, P.R.

TYPE Contract No. N62470-87-C-9009

CONTENTS Bundy WTP Capacity

Hayes, Seay, Mattern and Mattern
ARCHITECTS • ENGINEERS • PLANNERS

DATE 1 Sep 89 COMM NO. 1735 A

PREL. — FINAL ____ SHEET NO. 15

CAL. BY RFC CKD. BY ____

Summary of Bundy Wastewater Treatment Plant Capacity, Continued

Trickling Filter, Continued

Volume of Media = 33,930 cf
Design Organic Load, Int. Rate = 17-30 lb BOD/d/1000 cf
* Capacity = .49 - .87 mgd

* Based on a raw sewage BOD_5 of 200 mg/l with 30% BOD_5 reduction in primary clarifiers

Final Settling

Depth = 8 ft
Design Depth = 10-13 ft

Surface Area = 1656 sf
Design Rise Rate = 400 gpd/sf
Capacity = 0.66 mgd

Volume = 13,248 cf
Design Residence Time = 3 hours
Capacity = 0.79 mgd

Weir Length = 126 ft
Design Weir Loading = 10,000 gpd/lf
Capacity = 1.26 mgd

EXHIBIT

HSMM Form Prod - 6

PROJECT Study For Elimination of NPDES Violations, Roosevelt Rds, P.R.

TYPE Contract No. N62470-87-C-9009

CONTENTS Bundy WTP Capacity

Hayes, Seay, Mattern and Mattern
ARCHITECTS · ENGINEERS · PLANNERS

DATE 1 Sep 88 COMM NO. 1735 A

PREL. — FINAL ____ SHEET NO. 16

CAL. BY RFC CKD. BY ____

Summary of Bundy Wastewater Treatment Plant Capacity, Continued

Chlorine Contact

Volume	= 2416 cf
Design Residence Time	= 30 minutes
Capacity	= 0.87 mgd

Anaerobic Digestion

Volume	= 24,504 cf
Design Volatile Loading	= 80 lb volatile /1000 cf
* Capacity	= 0.65 mgd
Other Design Conditions	
Complete Mix	
Multiple Units	

* Refer to Industrial Area WTP calculation for design assumptions

Sludge Drying Beds

Area	= 7879 sf
Design Area Per Capita	= 1.75 sf/capita
Design Flow Per Capita	= 50 gpcd
Capacity	= 0.23 mgd

HSMM Form Prod - 6

EXHIBIT

PROJECT Study For Elimination of NPDES Violations, Roosevelt Rds, P.R.

TYPE Contract No. N62470-87-C-9009

CONTENTS Bundy WTP Capacity

Hayes, Seay, Mattern and Mattern
ARCHITECTS · ENGINEERS · PLANNERS

DATE 1 Sep 88 COMM NO. 1735 A

PREL. — FINAL _____ SHEET NO. 17

CAL. BY RFR CKD. BY _____

Summary of Bundy Wastewater Treatment Plant Capacity, Continued

Summary of Deficiencies

Bundy WTP was designed to operate as a 0.655 mgd trickling filter plant. Design deficiencies include:

- Primary Settling Tanks have inadequate depth, volume and weir length
- Final Settling Tanks have inadequate depth
- Anaerobic Digester does not have a multiple unit and is not mixed
- Sludge Drying Beds have half the design capacity of the plant

HSMM Form Prod - 6

EXHIBIT

PROJECT Study For Elimination of NPDES Violations, Roosevelt Rds, P.R.

TYPE Contract No. N62470-87-C-9009

CONTENTS Bundy WTP Capacity

Hayes, Seay, Mattern and Mattern
ARCHITECTS · ENGINEERS · PLANNERS

DATE 8 Jun 88 COMM NO. 1735 A

PREL. ✓ FINAL ____ SHEET NO. 18

CAL. BY RFC CKD. BY ____

Summary of Critical Dimensions of Bundy Wastewater Treatment Plant, from Constr. Dwg.

Primary Settling

No. of Units = 2
Dimensions of Each Unit = 13' x 42' x 8' SWD
Weir Length of Each Unit = 13'
Mechanisms:
- Rectangular Scraper
- Sludge Wells and Draw-off Pipes
- Scum Skimmer Pipe

Trickling Filter

No. of Units = 2
Dimension of Each Unit = 60' ø x 6' Media
Effluent Channel Cross Section = 1'-6" x 12"-20" Deep
Mechanism: 4-Arm Rotary Distributor
Type of Media: Stone

Final Settling

No. of Units = 2
Dimensions of Each Unit = 18' x 46' x 8' SWD
Weir Length of Each Unit = 63'
Mechanisms:
- Rectangular Scraper
- Sludge Wells and Draw-off Pipes
- No Scum Removal

HSMM Form Prod - 6

EXHIBIT

PROJECT Study For Elimination of NPDES Violations, Roosevelt Rds, P.R.

TYPE Contract No. N62470-87-C-9009

CONTENTS Bundy WTP Capacity

Hayes, Seay, Mattern and Mattern
ARCHITECTS · ENGINEERS · PLANNERS

DATE 8 Jun 88 COMM NO. 1735A

PREL. ✓ FINAL ____ SHEET NO. 19

CAL. BY RFC CKD. BY ____

Bundy Wastewater Treatment Plant Dimensions, Continued

Chlorine Contact

No. of Units = 2
Dimensions of Each Unit = 8'-4" x 29' x 5' SWD
Mechanisms: Concrete Baffles

Anaerobic Digestion

No. of Units = 1
Dimensions of Each Unit = 40' ø x 19'-6" Max
Mechanisms:
- Floating Cover
- Pressure Relief, No Flame
- No Mixer, No Heat

Sludge Drying Beds

No. of Units = 4
Dimensions of Each Unit = 33'-8" x 58'-6"
Media: Paved
Cover: None

EXHIBIT

PROJECT STUDY FOR ELIMINATION OF NPDES VIOLATIONS ROOSEVELT Rds P.R.

TYPE CONTRACT No. N62470-87-C-9001

CONTENTS GENERAL DESIGN CRITERIA

Hayes, Seay, Mattern and Mattern
ARCHITECTS · ENGINEERS · PLANNERS

DATE 9/30/88 COMM NO. 1735A

PREL. X FINAL ____ SHEET NO. 20

CAL. BY DMH CKD. BY ____

1. DENITRIFICATION

a Supplemental oxygen demand source is required for denitrification process. Assuming the use of methanol –

1. $OD = 2.47(NO_3) + 1.53(NO_2) + 0.87(DO)$ (REF 1)

   OD = methanol required (mg/l)

   NO_3 = Influent Nitrate concentration as Nitrogen (mg/l)

   NO_2 = Influent Nitrite Concentration as Nitrogen (mg/l)

   DO = Influent Dissolved Oxygen Concentration (mg/l)

2. METHANOL FEED SHOULD BE AUTOMATICALLY PACED TO INFLUENT NO_3 CONCENTRATI

b. Denitrification Reactor should conform to the following –

1. pH should be kept between 6.5 - 7.5
2. MLVSS 1200 mg/l - 2000 mg/l
3. Sludge Age 3.5 - 14 days
4. Detention time 2 - 4 hr.
5. Denitrification rate 0.20 lb. of OXIDIZED NITROGEN REMOVED PER lb MLVSS PER DAY AT A MINIMUM INFLUENT TEMPERATURE OF 20°C.
6. PROVIDE 1/2 HP OF MIXING PER 1000 ft^3 OF MLVSS

c. DENITRIFICATION AERATOR SHOULD CONFORM TO THE FOLLOWIN

1. DETENTION TIME 2 hr.
2. PROVIDE ~ 1 HP PER 1000 ft^3 of aerator volume for mechanical aerators

HSMM Form Prod - 6

EXHIBIT

d. DENITRIFICATION CLARIFIER SHOULD CONFORM TO THE FOLLOWING -

1. Overflow rate 1200 gallons per square foot per day at peak hourly flow. Peak hourly flow = 2 times design flow.
2. Minimum depth = 12 feet, Minimum length = 10 feet.
3. Weir loadings not to exceed 10,000 gallons per linear ft per day.

2. Dechlorination

a. Use Sulfur Dioxide to accomplish dechlorination.

b. Sulfonator capacity should be adequate to dechlorinate the maximum chlorine residual on at least a one-to-one basis, at maximum flow.

c. Assume a maximum chlorine residual of 8 mg/l.

USMM Form Prod - 6

EXHIBIT

PROJECT STUDY FOR ELIMINATION OF NPDES VIOLATIONS, ROOSEVELT ROS, P.R.

TYPE CONTRACT NO. N62470-87-C-9081

CONTENTS GENERAL DESIGN CRITERIA

Hayes, Seay, Mattern and Mattern
ARCHITECTS • ENGINEERS • PLANNERS

DATE 9/30/88 COMM NO. 1735A

PREL. X FINAL ____ SHEET NO. 22

CAL. BY DMH CKD. BY ____

3. PH adjustment

pH adjustment will be accomplished by feeding NaOH to raise pH as required to meet permit requirements.

4. Post Aeration (NOT NEEDED AT BUNDY)

a. Detention time of 10 minutes

b. Mechanical aerators with a HP of 1 HP per 1000 ft^3.

HSMM Form Prod - 6

EXHIBIT

PROJECT STUDY FOR ELIMINATION OF NPDES VIOLATIONS, ROOSEVELT RDS P.R.

TYPE CONTRACT No. N62470-87-C-9009

CONTENTS INDUSTRIAL WTP - PROCESS DESIGN

Hayes, Seay, Mattern and Mattern
ARCHITECTS • ENGINEERS • PLANNERS

DATE 9/30/88 COMM NO. 1735A

PREL. X FINAL ____ SHEET NO. 23

CAL. BY DMH CKD. BY ____

(SEE GENERAL DESIGN CRITERIA FOR INFORMATION NOT INCLUDED IN THIS SECTION)

REQUIREMENTS:

1. OIL & GREASE REMOVAL FROM EXISTING AERATED LAGOON
2. DENITRIFICATION
3. INCREASE CHLORINE DOSAGE
4. DECHLORINATION
5. pH ADJUSTMENT
6. POST AERATION
7. CORRECT BLINDING AT EXISTING TRICKLING FILTERS
8. GRIT REMOVAL FACILITY
9. ADD'L PRIMARY SETTLING TANK
10. ADD'L DRYING BEDS
11. SERVICE TRICKLING FILTER
12. REPIPE TRICKLING FILTER RECIRCULATION FLOWS

1. OIL & GREASE REMOVAL FROM EXISTING AERATED LAGOON

THE EXISTING AERATED LAGOON CAPTURES MOST OF THE OIL & GREASES WHICH ENTER THE WTP. TO FACILITATE REMOVING THESE OILS & GREASES A SKIMMER SHOULD BE PROVIDED.

TO AVOID SUCKING OILS & GREASES UNDER THE SKIMMER ASSUME A VELOCITY OF APPROACH OF 0.1 fps.

937,000 gpd = 1.45 cfs (3) = 4.4 CFS WITH VEL = 0.1 fps

PEAKING FACTOR

44' CLEAR REQUIRED.

USE TROUGH 15' LONG, WATER DEPTH 3'

EXHIBIT

USMM Form Prod - 6

PROJECT Study For Elimination of NPDES Violations, Roosevelt Rds, P.R

TYPE Contract No 62470-87-C-9009

CONTENTS Industrial WTP - Process Design

Hayes, Seay, Mattern and Mattern
ARCHITECTS • ENGINEERS • PLANNERS

DATE 9/30/88 COMM NO. 1735A

PREL. X FINAL ____ SHEET NO. 24

CAL. BY DMH CKD. BY ____

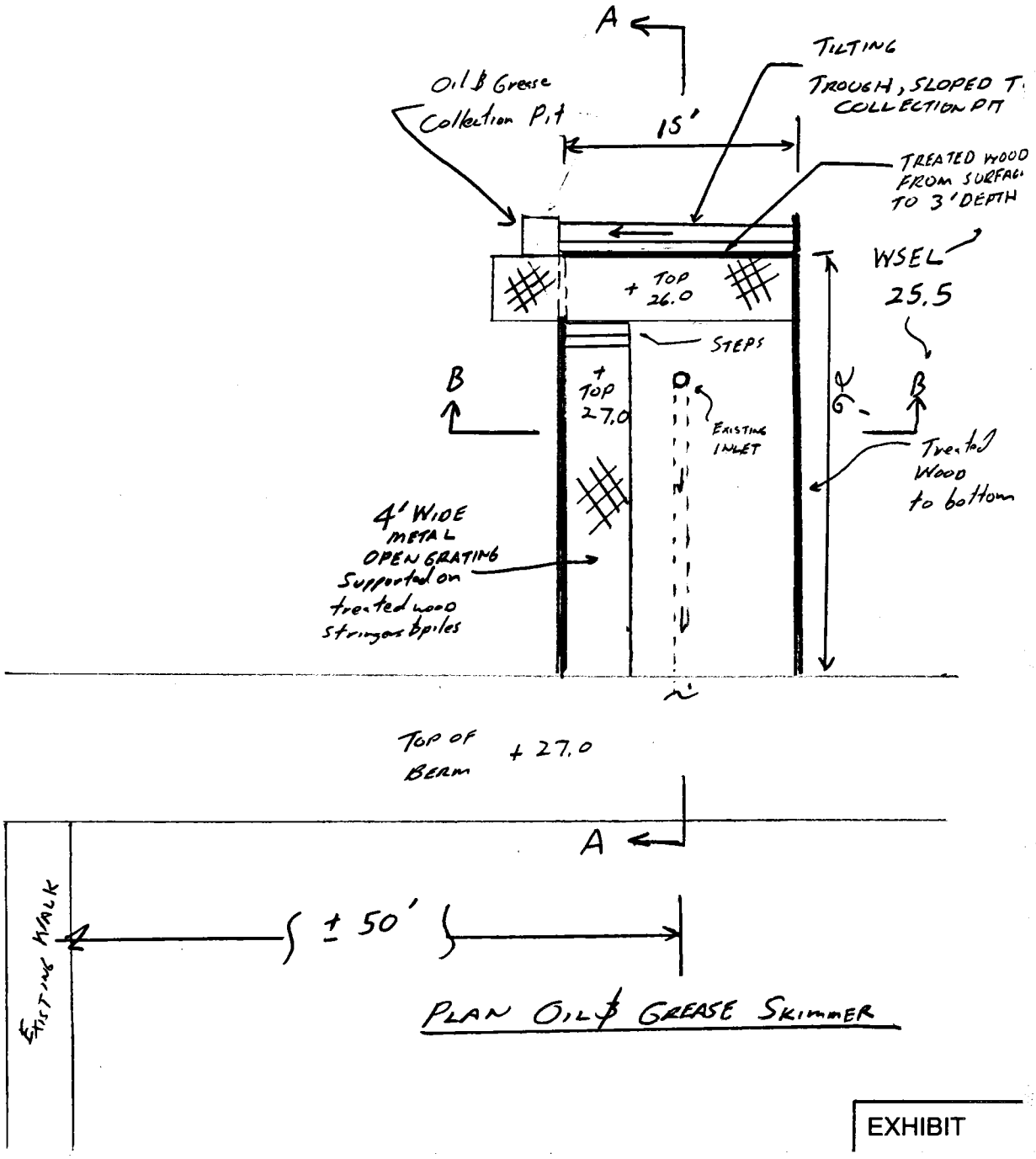

Plan Oil & Grease Skimmer

EXHIBIT

HSMM Form Prod - 6

PROJECT STUDY FOR ELIMINATION OF NPDES VIOLATIONS, ROOSEVELT Rds, P.R.

TYPE CONTRACT NO. 62470-88-C-9009

CONTENTS INDUSTRIAL WTP - PROCESS DESIGN

Hayes, Seay, Mattern and Mattern
ARCHITECTS • ENGINEERS • PLANNERS

DATE 9/30/88 COMM NO. 1735A

PREL. X FINAL ____ SHEET NO. 25

CAL. BY DMH CKD. BY ____

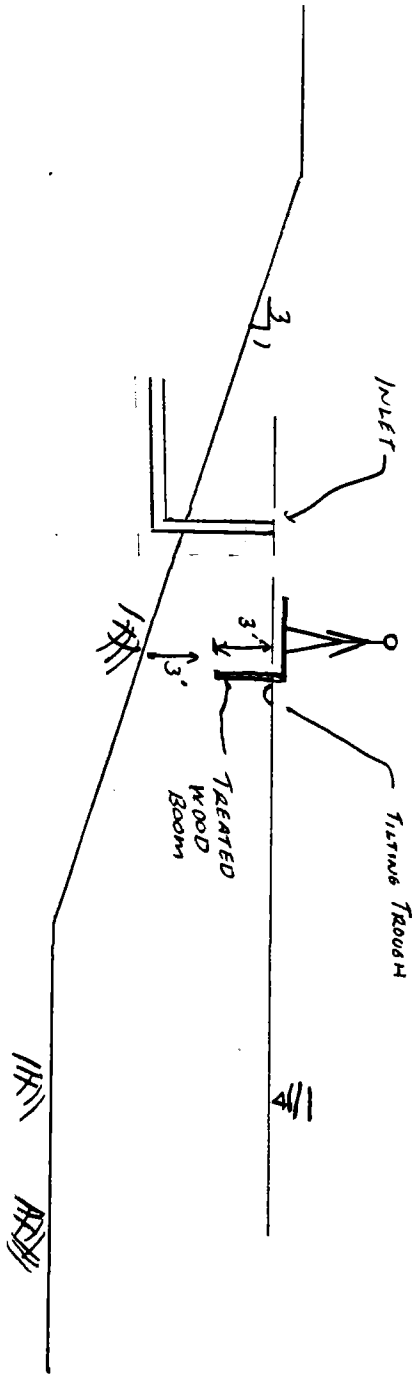

SECTION A-A

EXHIBIT

HSMM Form Prod - 6

PROJECT STUDY FOR ELIMINATION OF NPDES VIOLATIONS, ROOSEVELT RDS, P.R.

TYPE CONTRACT NO. N62470-87-C-9009

CONTENTS INDUSTRIAL WTP - PROCESS DESIGN

Hayes, Seay, Mattern and Mattern
ARCHITECTS • ENGINEERS • PLANNERS

DATE 9/30/88 COMM NO. 1735A

PREL. X FINAL ____ SHEET NO. 26

CAL. BY DMH CKD. BY ____

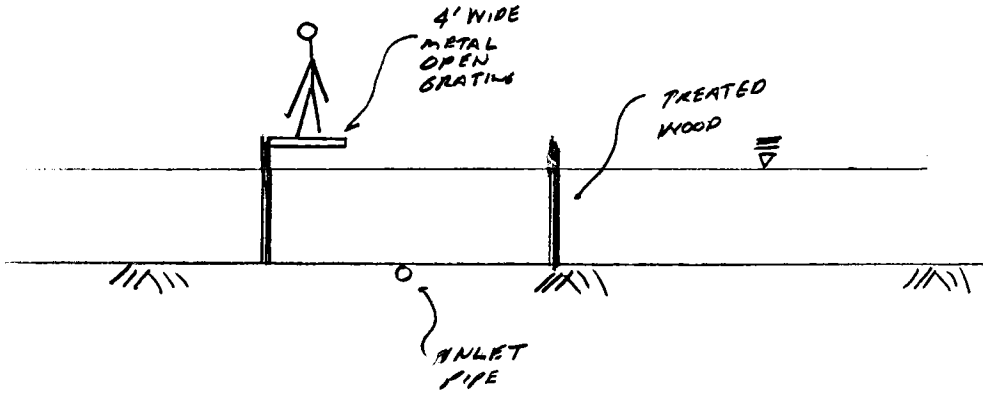

SECTION B-B

HSMM Form Prod - 6

EXHIBIT

PROJECT STUDY FOR ELIMINATION OF NPDES VIOLATIONS, ROOSEVELT RDS, P.R.

TYPE CONTRACT NO N62470-87-C-9009

CONTENTS INDUSTRIAL WTP - PROCESS DESIGN

Hayes, Seay, Mattern and Mattern
ARCHITECTS • ENGINEERS • PLANNERS

DATE 9/30/88 COMM NO. 1735A

PREL. X FINAL ____ SHEET NO. 27

CAL. BY DMH CKD. BY ____

2. DENITRIFICATION

A. DATA

1. PLACE DENITRIFICATION AFTER SECONDARY CLARIFIER, PRIOR TO CHLORINATION.

2. BASED ON THE SAMPLING PROGRAM, NITRIFICATION IS NEAR COMPLETION BY THIS POINT. $NITRATE_{DESIGN} = 10 mg/l$, $Dissolved\ Oxygen_{DESIGN} = 5 mg/l$

B. SUPPLEMENTAL OXYGEN DEMAND SOURCE - USE METHANOL

$$OD = 2.47(NO_3) + 0.87(DO) \quad (REF\ 2)$$

OD = Oxygen Demand = Methanol (mg/l)
NO_3 = Influent Nitrate concentration as Nitrogen (mg/l)
DO = Dissolved OXYGEN (mg/l)

$$OD = 2.47(10) + 0.87(5)$$
$$OD = 29\ mg/l$$

$$29 mg/l\ (937000)\ (3)\ /1000000/24 = 3.4\ gallons/hr.$$

PEAKING FACTOR

1. Require continuous nitrate monitor & controller to direct chemical feed of methanol. Peak Feed capacity 3.4 gallons/hr.

2. require storage tank for methanol say 1500 gallon tank good for ~ 2 months

EXHIBIT

USMM Form Prod - 6

PROJECT STUDY FOR ELIMINATION OF NPDES VIOLATIONS, ROOSEVELT RDS, P.R.

TYPE CONTRACT NO. N62470-87-C-9009

CONTENTS INDUSTRIAL WTP - PROCESS DESIGN

Hayes, Seay, Mattern and Mattern
ARCHITECTS • ENGINEERS • PLANNERS

DATE 9/30/88 COMM NO. 1735A

PREL. X FINAL ____ SHEET NO. 28

CAL. BY DMH CKD. BY ____

C. Denitrification reactor

Detention time 2 hr.

$$2\,hr = \frac{Vol}{937{,}000/24}$$

$$Vol = 78100 \text{ gallons} = 10440\ ft^3$$

Check removal efficiency

$$N_E = N_I - \frac{Vol[MLVSS\ (R)]}{Q} \quad (REF\ 1)$$

N_E = Effluent NO_3 (mg/l)
N_I = Influent NO_3 (mg/l)
R = Denitrification rate = 0.20

$$N_E = 10 - \frac{78100(1500)(0.20)}{937{,}000}$$

$N_E = -15$ mg/l NEGATIVE CONCENTRATION INDICATES NEAR COMPLETE REMOVAL (80% - 90%)!

HSMM Form Prod - 6

EXHIBIT

PROJECT STUDY FOR ELIMINATION OF NPDES VIOLATIONS, ROOSEVELT RDS, P.R.

TYPE CONTRACT NO. N62470-87-C-9009

CONTENTS INDUSTRIAL WTP - PROCESS DESIGN

Hayes, Seay, Mattern and Mattern
ARCHITECTS • ENGINEERS • PLANNERS

DATE 9/30/88 COMM NO. 1735A

PREL. X FINAL ____ SHEET NO. 29

CAL. BY DMH CKD. BY ____

EXPECTED BIOMASS PRODUCTION

$$\Delta X = 8.34(Q)[0.53(N_I) + 0.19(DO)]$$ (REF 1)

ΔX = Biomass creation lb/day
Q = flow (MGD)

$$\Delta X = 8.34(.937)[0.53(10) + 0.19(5)]$$

$$\Delta X = \underline{48.8 \text{ lb/day}}$$

CALCULATE REQUIRED SLUDGE WASTAGE RATE

$$Q_w = \frac{\Delta X}{8.34(MLVSS)}$$ (REF 1)

$$Q_w = \frac{48.8}{8.34(1500)} = 0.0039 \text{ MGD} = \underline{3900 \text{ GPD}}$$

SLUDGE AGE

$$\theta_c = V/Q_w \quad \frac{78100}{3900} = \underline{20 \text{ DAYS}}$$

HP REQUIREMENT

$$1/2 \text{ HP}/1000 \text{ ft}^3 (10440) = \underline{5.2 \text{ HP}}$$

FACILITIES

2-circular tanks 26' x 12' Deep (2' FREEBOARD)
w/ 2 HP down pumping mixer in each tank

EXHIBIT

HSMM Form Prod - 6

PROJECT Study For Elimination of NPDES Violations, Roosevelt Rds, P.R.

TYPE Contract No. N62470-87-C-9009

CONTENTS Industrial WTP - Process Design

Hayes, Seay, Mattern and Mattern
ARCHITECTS • ENGINEERS • PLANNERS

DATE 9/30/88 COMM NO. 1735A

PREL. X FINAL ____ SHEET NO. 30

CAL. BY DMH CKD. BY ____

D Denitrification Aerator

Tank Volume

Detention Time 2 hr.

937,000 /24 (2) = 78100 gallons = 10440 ft^3

HP Requirement

1 HP/1000 ft^3 (10440) = 10 HP

Facilities

2 - Circular Tanks 26' Diameter x 12' Deep (2' Freeboard w/ a 5 HP floating aerator in each.

E Denitrification Clarifier

Tank Volume

1200 gallon per SF per day during peak flow

$\frac{937000}{1200}[2] = 1560\ ft^2$

Depth = 12' Vol = 18720 ft^3

Overflow Weir Length

937,000 ÷ 10,000 = 93.7 use 100 ft.

HSMM Form Prod - 6

EXHIBIT

PROJECT Study for Elimination of NPDES Violations, Roosevelt Roads, P.R.

TYPE Contract No. N62470-87-C-9009

CONTENTS Industrial WTP - Process Design

Hayes, Seay, Mattern and Mattern
ARCHITECTS • ENGINEERS • PLANNERS

DATE 9/30/88 COMM NO. 1735A

PREL. X FINAL ____ SHEET NO. 31

CAL. BY DMH CKD. BY ____

Facilities

2 - Circular Tanks 32' Diameter x 14' Deep (2' Freeboard) w/ Sludge Return Pumps with Capacity to return 937,000 gallons/day plus one back up pump.

F Yard Piping

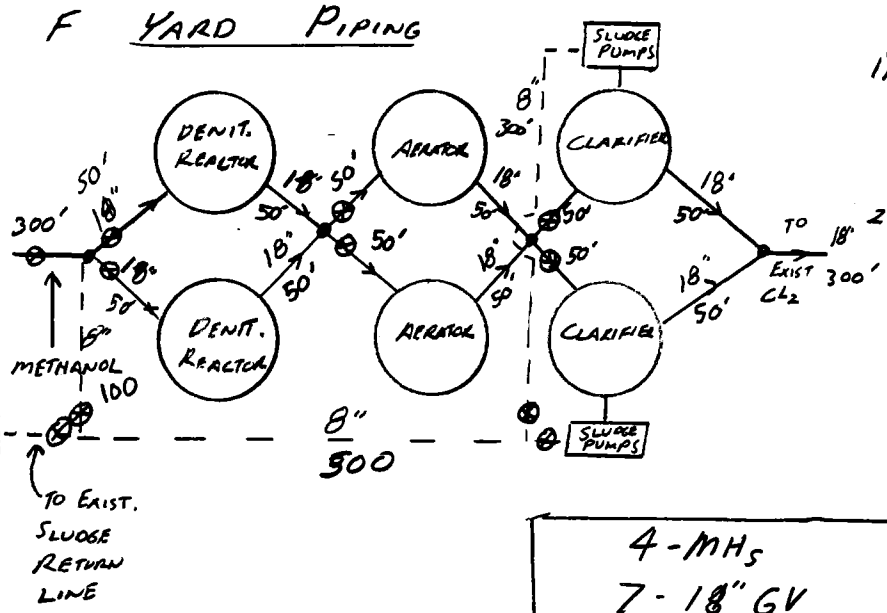

1). Sizes Based on Sizes of Existing Pipes

2) Lengths Based on Existing Plans - VERY ROUGH

4 - MHs
7 - 18" GV
4 - 8" Plug Valves
1200' - 18" DIP
1000' - 8" DIP

HSMM Form Prod - 6

EXHIBIT

PROJECT STUDY FOR ELIMINATION OF NPDES VIOLATIONS, ROOSEVELT RDS, P.R.

TYPE CONTRACT NO. N62470-87-C-9009

CONTENTS INDUSTRIAL WTP – PROCESS DESIGN

Hayes, Seay, Mattern and Mattern
ARCHITECTS • ENGINEERS • PLANNERS

DATE 9/30/88 COMM NO. 1735A

PREL. X FINAL ____ SHEET NO. 32

CAL. BY DMH CKD. BY ____

3. INCREASE CHLORINE DOSAGE.

NO ADDITIONAL CAPITAL COST

4. DECHLORINATE

NEED TO PROVIDE SULFONATOR WITH CAPACITY TO FEED ADEQUATE SO_2 TO REMOVE CHLORINE.

ASSUME MAX CL_2 = 6 mg/l AT 937000 gpd

$$\text{or } \frac{(937)(6)(8.34)}{24} = 2 \text{ lb } SO_2/\text{hr.}$$

5. pH ADJUSTMENT

PROVIDE CHEMICAL FEED PUMP TO FEED NaOH.

HSMM Form Prod - 6

EXHIBIT

PROJECT Study For Elimination of NPDES Violations, Roosevelt Rds, P.R.

TYPE Contract No. N62470-87-C-9009

CONTENTS Industrial WTP - Process Design

Hayes, Seay, Mattern and Mattern
ARCHITECTS • ENGINEERS • PLANNERS

DATE 9/30/88 COMM NO. 1735A

PREL. X FINAL ____ SHEET NO. 33

CAL. BY DMH CKD. BY ____

6. Post Aeration

Tank Volume

Detention time = 10 min

937,000 / 144 = 6510 gallons = 870 ft^3

HP Required

1 HP/1000 ft^3 (870) = 1 HP

1 tank 10'x10'x10' (2' freeboard)
w/ 1 HP Aerator

HSMM Form Prod - 6

EXHIBIT

PROJECT STUDY FOR ELIMINATION OF NPDES VIOLATIONS, ROOSEVELT ROS, P.R.

TYPE CONTRACT NO. N62470-87-C-9009

CONTENTS INDUSTRIAL WTP - PROCESS DESIGN

Hayes, Seay, Mattern and Mattern
ARCHITECTS • ENGINEERS • PLANNERS

DATE 9/30/88 COMM NO. 1735A

PREL. X FINAL ____ SHEET NO. 34

CAL. BY DMH CKD. BY ____

7. a CORRECT BLINDING AT EXISTING TRICKLING FILTER

A REPLACE EXISTING MEDIA W/ PLASTIC MEDIA

VOL. REQUIRED 46,182 CF.

B. REMOVE & CLEAN TOP 1 FT. OF MEDIA
VOL REQUIRED 8100 CF OR 300 CY

HSMM Form Prod - 6

EXHIBIT

PROJECT STUDY FOR ELIMINATION OF NPDES VIOLATIONS, ROOSEVELT RDS P.R

TYPE CONTRACT NO. N62470-87-C-9009

CONTENTS INDUSTRIAL WTP - PROCESS DESIGN

Hayes, Seay, Mattern and Mattern
ARCHITECTS • ENGINEERS • PLANNERS

DATE 22 DEC 93 COMM NO. 1735A

PREL. ✓ FINAL _____ SHEET NO. 35

CAL. BY DMH CKD. BY _____

8 GRIT REMOVAL FACILITY

GRIT SHOULD BE REMOVED AT THE HEAD OF THE PLANT.

ASSUME 3 MIN. Retention time @ rated flow.

2000 · (3) = 6000 gallons = 800 ft³

DEPTH 7 ft.

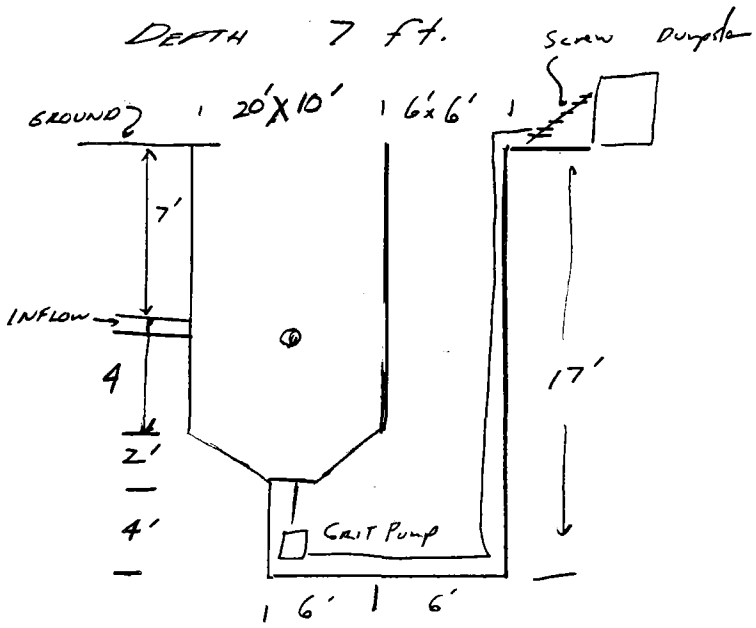

Assume 4' Depth
20' x 10'

FACILITIES

Hopper & dry well conc. volume

4'(2')(20+10) + 2(2)(20+10) + 20(10) + 17(4)6 + 6(12)
= 1460 (1' Th.k) = 1460 ft³
= 54 CY USE Forming factor of 100% To reflect forming cost.

Grit Pump

Dewatering Screw

MISC.

HSMM Form Prod - 6

EXHIBIT

PROJECT STUDY FOR ELIMINATION OF NPDES VIOLATIONS, ROOSEVELT RDS. P.R.

TYPE CONTRACT NO. N62470-87-C-9089

CONTENTS INDUSTRIAL WTP - PROCESS DESIGN

Hayes, Seay, Mattern and Mattern
ARCHITECTS • ENGINEERS • PLANNERS

DATE 27 Dec 88 COMM NO. 1735A

PREL. X FINAL ____ SHEET NO. 36

CAL. BY DMH CKD. BY ____

9. ADD'L PRIMARY SETTLING TANK

TO PROVIDE RELIABILITY FOR FUTURE FLOWS
Supply Primary Settling TANK MATCHING EXISTING.

16' x 48' x 8' TANK = 66 CY (ASSUME 1' TK)
Assume use same clarifier & pumping
equipment as denitrification clarifier.

10. ADD'L DRYING BEDS

TO PROVIDE CAPACITY FOR ADD'L SLUDGE DUE TO DENITRIFICATION & FUTURE FLOWS. ADD 20,200 SF OF PAVED DRYING BEDS.
Assume drying beds 20' wide & 100 ft long require 10 beds
conc. walls 4' high assume all conc. 6" thick. {[4(100+20)2+100(20]
0.50}/10 = 542 CY

11. SERVICE TRICKLING FILTER

REBUILD BEARINGS & SEALS
NEW SUPPORT CABLES
NEW NOZZLES & NEW COATINGS ON COLUMNS & ARMS

HSMM Form Prod - 6

EXHIBIT

PROJECT STUDY FOR ELIMINATION OF NPDES VIOLATIONS, ROOSEVELT RDS, P.R.

TYPE CONTRACT NO. N62470-87-C-9009

CONTENTS INDUSTRIAL WTP - PROCESS DESIGN

Hayes, Seay, Mattern and Mattern
ARCHITECTS • ENGINEERS • PLANNERS

DATE 27 DEC 88 COMM NO. 1735A

PREL. X FINAL ____ SHEET NO. 37

CAL. BY DMH CKD. BY ____

12. REPIPE TRICKLING FILTER RECIRCULATION FLOWS

PIPE RECIRCULATION WATER TO EXISTING MH upstm of Primary Settlemetation Basin.

HSMM Form Prod - 6

EXHIBIT

PROJECT STUDY FOR ELIMINATION OF NPDES VIOLATIONS, ROOSEVELT RDS., P.R.

TYPE CONTRACT NO. N62470-87-C-9009

CONTENTS CAPEHART WTP - PROCESS DESIGN

Hayes, Seay, Mattern and Mattern
ARCHITECTS · ENGINEERS · PLANNERS

DATE 9/30/88 COMM NO. 1735A

PREL. X FINAL ____ SHEET NO. 38

CAL. BY DMH CKD. BY ____

(See General Design Criteria for information not included in this section)

REQUIREMENTS:

1. DENITRIFICATION
2. INCREASE CHLORINE DOSAGE
3. DECHLORINATION
4. pH ADJUSTMENT
5. POST AERATION
6. PROVIDE ADDITIONAL SLUDGE DEWATERING CAPACITY
7. GRIT REMOVAL

HSMM Form Prod - 6

EXHIBIT

PROJECT STUDY FOR ELIMINATION OF NPDES VIOLATIONS, ROOSEVELT Rds. P.R.

TYPE CONTRACT No. N62470-87-C-9009

CONTENTS CAPEHART WTP - PROCESS DESIGN

Hayes, Seay, Mattern and Mattern
ARCHITECTS • ENGINEERS • PLANNERS

DATE 9/30/88 COMM NO. 1735A

PREL. X FINAL ____ SHEET NO. 39

CAL. BY DMH CKD. BY ____

1. DENITRIFICATION

A. DATA

1. PLACE DENITRIFICATION AFTER SECONDARY CLARIFIER, PRIOR TO CHLORINATION. SYSTEM WILL NEED TO BE PUMPED to the north of the existing plant due to space limitations.

2. BASED ON THE SAMPLING PROGRAM, NITRIFICATION IS NEAR COMPLETION BY THIS POINT. $NITRATE_{DESIGN} = 12$ mg/l, $DISSOLVED\ OXYGEN_{DESIGN} = 5$ mg/l

B. SUPPLEMENTAL OXYGEN DEMAND SOURCE - USE METHANOL

$$OD = 2.47(NO_3) + 0.87(DO) \quad \text{(REF 1)}$$

OD = Oxygen Demand = Methanol (mg/l)
NO_3 = Influent Nitrate concentration as Nitrogen (mg/l)
DO = DISSOLVED OXYGEN (mg/l)

$$OD = 2.47(12) + 0.87(5)$$
$$OD = 34 \text{ mg/l}$$

$$34 \text{ mg/l } (460\,000)\underbrace{(3)}_{\text{PEAKING FACTOR}} / 1000000 / 24 = 2.0 \text{ gallons/hr.}$$

Require continuous nitrate monitor & controller to direct chemical feed of methanol. PEAK Feed capacity 2.0 gallons/hr.

require storage tank for methanol say 2000 gallon tank good for ~ 2 months

PROJECT STUDY FOR ELIMINATION OF NPDES VIOLATIONS ROOSEVELT RDS, P.R.

TYPE CONTRACT NO. N62470-87-C-9009

CONTENTS CAPEHART WTP - PROCESS DESIGN

Hayes, Seay, Mattern and Mattern
ARCHITECTS • ENGINEERS • PLANNERS

DATE 9/30/88 COMM NO. 1735A

PREL. X FINAL ____ SHEET NO. 40

CAL. BY DMH CKD. BY ____

C. Denitrification reactor

Detention time 2 hr.

$$2\,hr = \frac{Vol}{460{,}000/24}$$

$$Vol = 38350 \text{ gallons} = 5130\ ft^3$$

Check removal efficiency

$$N_E = N_I - \frac{Vol\,[MLVSS\ (R)]}{Q} \quad (REF\ 1)$$

N_E = Effluent NO_3 (mg/l)
N_I = Influent NO_3 (mg/l)
R = Denitrification rate = 0.20

$$N_E = 12 - \frac{38350\,(1500)(0.20)}{460{,}000}$$

$N_E = -13$ mg/l NEGATIVE CONCENTRATION INDICATES NEAR COMPLETE REMOVAL (80% - 90%

HSMM Form Prod - 6

EXHIBIT

PROJECT STUDY FOR ELIMINATION OF NPDES VIOLATION, ROOSEVELT RDS, P.R.

TYPE CONTRACT No. N62470-87-C-9009

CONTENTS CAPEHART WTP - PROCESS DESIGN

Hayes, Seay, Mattern and Mattern
ARCHITECTS • ENGINEERS • PLANNERS

DATE 9/30/88 COMM NO. 1735A

PREL. X FINAL ____ SHEET NO. 41

CAL. BY DMH CKD. BY ____

EXPECTED BIOMASS PRODUCTION

$$\Delta X = 8.34(Q)[0.53(N_I) + 0.19(DO)]$$

ΔX = Biomass creation lb/day
Q = flow (MGD)

$$\Delta X = 8.34(.46)[0.53(12) + 0.19(5)]$$

$$\Delta X = 28.0 \text{ lb/day}$$

CALCULATE REQUIRED SLUDGE WASTAGE RATE

$$Q_w = \frac{\Delta X}{8.34(MLVSS)}$$

$$Q_w = \frac{28.0}{8.34(1500)} = 0.0022 \text{ MGD} = 2250 \text{ GPD}$$

SLUDGE AGE

$$\theta_c = V/Q_w \quad \frac{38350}{2250} = 17 \text{ DAYS}$$

HP REQUIREMENT

$$1/2 \text{ HP}/1000 \text{ ft}^3 (5130) = 2.5 \text{ HP}$$

FACILITIES

2-circular tanks 18' x 12' Deep (2' FREEBOARD)
w/ 1½ HP down pumping mixer in each tank

EXHIBIT

HSMM Form Prod - 6

PROJECT STUDY FOR ELIMINATION OF NPDES VIOLATIONS, ROOSEVELT RDS, P.R.

TYPE CONTRACT No. N62470-87-C-9009

CONTENTS CAPEHART WTP - PROCESS DESIGN

Hayes, Seay, Mattern and Mattern
ARCHITECTS • ENGINEERS • PLANNERS

DATE 9/30/88 COMM NO. 1735A

PREL. X FINAL ____ SHEET NO. 42

CAL. BY DMH CKD. BY ____

D. Denitrification Aerator

Tank Volume

Detention Time 2 hr.

460,000 /24 (2) = 38350 gallons = 5130 ft³

Use diffused air since compressed air is available

40 cfm air/1000 ft³

require 205 cfm

each diffuser delivers 10 cfs

require 20 diffusers

associated piping assume 500'

2 - circular tanks 18' DIAMETER x 12' DEEP (2' Freeboa

E DENITRIFICATION CLARIFIER

TANK VOLUME

1200 gallons per SF. per day during peak flow

460000/1200 (2) = 767 ft²

DEPTH = 12' VOL = 9204 ft³

OVERFLOW WEIR LENGTH

460 000 ÷ 10000 = 46 use 50 ft

HSMM Form Prod - 6

EXHIBIT

PROJECT STUDY FOR ELIMINATION OF NPDES VIOLATIONS, ROOSEVELT RDS, P.R.

TYPE CONTRACT NO. N62470-87-C-9009

CONTENTS CAPEHART WTP - PROCESS DESIGN

Hayes, Seay, Mattern and Mattern
ARCHITECTS • ENGINEERS • PLANNERS

DATE 9/30/88 COMM NO. 9/30/88

PREL. X FINAL ____ SHEET NO. 43

CAL. BY DMH CKD. BY ____

FACILITIES

2 - CIRCULAR tanks 22' x 14' DEEP (2' FREEBOARD) w/ SLUDGE RETURN PUMPS WITH CAPACITY TO RETURN 460,000 gallons/day plus one back up pump

F YARD PIPING

VERY ROUGH

12" DIP	1200 LF
8" DIP	1000 LF

G. PUMPING STATION TO PUMP TO DENITRIFICATION FACILITIES

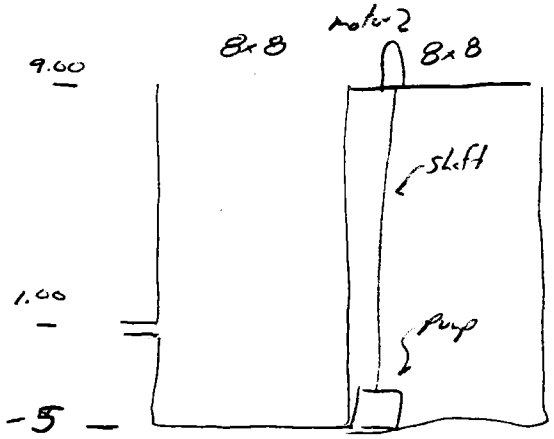

CONC. 14(8)(4)(2) + (8x8) 2 = 1004 CF = 38 CY

2 Pumps to pump 700gpm ea. against 30' OF HEAD
USE Allis Chalmers 4x4x12LC Pump 1170 RPM
10 HP
Total Distance Pump to grade 14'
ALTERNATE PUMPS. LEVEL CONTROL SYSTEM, ABOVE GRADE CONTROL PANEL HATCHES. (Assume all valves, fittings, etc covered under yard piping)

No emergency power provided.

EXHIBIT

HSMM Form Prod - 6

PROJECT STUDY FOR ELIMINATION OF NPDES VIOLATIONS, ROOSEVELT RDS, P.R.

TYPE CONTRACT No. 62470-87-C-9009

CONTENTS CAPEHART WTP - PROCESS DESIGN

Hayes, Seay, Mattern and Mattern
ARCHITECTS • ENGINEERS • PLANNERS

DATE 9/30/88 COMM NO. 1735A

PREL. X FINAL ____ SHEET NO. 44

CAL. BY DMH CKD. BY ____

2. INCREASE CHLORINE DOSAGE

NO ADDITIONAL CHLORINE CAPITAL COST

3. DECHLORINATION

NEED TO PROVIDE A SULFONATOR WITH CAPACITY TO FEED ADEQUATE SO_2 TO REMOVE CHLORINE

ASSUME MAX $Cl_2 = 6\ mg/l$ AT 460,000 gpd

or $\therefore \frac{0.46(6)}{24}(8.34) = 0.96\ lb\ SO_2/hr$

4. pH Adjustment

PROVIDE CHEMICALS FEED PUMP TO FEED NaOH.

HSMM Form Prod - 6

EXHIBIT

PROJECT STUDY FOR ELIMINATION OF NPDES VIOLATIONS, ROOSEVELT Rds, P.R.

TYPE CONTRACT No. N62470-87-C-9009

CONTENTS CAPEHART WTP - PROCESS DESIGN

Hayes, Seay, Mattern and Mattern
ARCHITECTS • ENGINEERS • PLANNERS

DATE 9/30/88 COMM NO. 1735A

PREL. X FINAL ____ SHEET NO. 45

CAL. BY DMH CKD. BY ____

5. POST Aeration

TANK VOLUME

DETENTION TIME = 10 MIN

460,000 / 144 = 3195 gallons = 427 ft³

Use diffused air diffusers based on similar jobs
provide 10 diffusers

piping ~ 100'

1 tank 8'x8'x8' (2' Freeboard

HSMM Form Prod - 6

EXHIBIT

PROJECT STUDY FOR ELIMINATION OF NPDES VIOLATIONS, ROOSEVELT RDS, P.R.

TYPE CONTRACT No. N62470-87-C-9009

CONTENTS CAPEHART WTP - PROCESS DESIGN

Hayes, Seay, Mattern and Mattern
ARCHITECTS • ENGINEERS • PLANNERS

DATE 9/30/88 COMM NO. 1735A

PREL. X FINAL ____ SHEET NO. A6

CAL. BY DMH CKD. BY ____

6. PROVIDE ADDITIONAL SLUDGE DEWATERING CAPACITY

The WTP should have 0.035 SF OF DRYING BED/Gallon OF FLOW

0.035(460,000) = 16,046 SF REQUIRED

1500 SF OF DRY BEDS EXIST

Provide 16050 - 1500 = 14,550 SF OF ADDITIONAL SLUDGE DRYING BEDS

7. GRIT Removal - GRIT SHOULD BE REMOVED PRIOR TO FLOW REACHING THE LIFT STATIONS. ASSUME SIMILIAR INSTALLATION TO INDUSTRIAL WTP.

HSMM Form Prod - 6

EXHIBIT

PROJECT Study For Elimination of NPDES Violations, Roosevelt Rds, P.R.

TYPE Contract No. N 62470-87-C-9009

CONTENTS Capehart WTP - Process Design

Hayes, Seay, Mattern and Mattern
ARCHITECTS • ENGINEERS • PLANNERS

DATE 12/22/88 COMM NO. 1735 A

PREL. ✓ FINAL ____ SHEET NO. 47

CAL. BY RFC CKD. BY ____

Size Raw Sewage Pump to Divert Flow From Capehart WTP Pumping Station 1471 to the Bundy WTP Collection System.

Existing Lift Station has 2 - 400 gpm pumps for 40 ft TDH, 10 HP, 1760 rpm motors

Static Head = 25 meters - 5 meters = 65 ft
Friction for 8" force main:
16,000 lf x 0.548 ft/100 lf hf = 89 ft

Total Dynamic Head = 153 ft

Horsepower at 60% Efficiency = 25 HP

Size Raw Sewage Pump to Divert All Flow from Capehart WTP to the Bundy WTP Collection System.

Existing Capehart WTP has 2 - 350 gpm pumps and 2 - 720 gpm pumps

Static Head = 65 ft
Friction for 8" force main
19,800 lf x 0.548 ft/100 lf hf = 109 ft

Total Dynamic Head = 174 ft

Horsepower at 60% Efficiency = 100 HP

HSMM Form Prod - 6

EXHIBIT

PROJECT STUDY FOR ELIMINATION OF NPDES VIOLATIONS, ROOSEVELT RDS, P.R.

TYPE CONTRACT No. N62470-87-C-9009

CONTENTS BUNDY WTP - PROCESS DESIGN

Hayes, Seay, Mattern and Mattern
ARCHITECTS • ENGINEERS • PLANNERS

DATE 9/30/88 COMM NO. 1735A

PREL. X FINAL ____ SHEET NO. 48

CAL. BY DMH CKD. BY ____

(SEE GENERAL DESIGN CRITERIA FOR INFORMATION NOT INCLUDED IN THIS SECTION)

REQUIREMENTS :

1. DENITRIFICATION
2. INCREASE CHLORINE DOSAGE
3. DECHLORINATION
4. pH ADJUSTMENT
5. HEAVY METALS REMOVAL

1. DENITRIFICATION

A. DATA

1 PLACE DENITRIFICATION AFTER SECONDARY CLARIFIER PRIOR TO CHLORINATION

2 BASED ON THE SAMPLING PROGRAM, NITRIFICATION IS NEAR COMPLETION BY THIS POINT

$NITRATE_{DESIGN} = 15$ mg/l, $DISSOLVED\ OXYGEN_{DESIGN} = 6$ mg/l

HSMM Form Prod - 6

EXHIBIT

PROJECT STUDY FOR ELIMINATION OF NPDES VIOLATIONS, ROOSEVELT RDS, P.R.

TYPE CONTRACT NO. N62470-87-C-9009

CONTENTS BUNDY WTP - PROCESS DESIGN

Hayes, Seay, Mattern and Mattern
ARCHITECTS · ENGINEERS · PLANNERS

DATE 9/30/88 COMM NO. 1735A

PREL. X FINAL ____ SHEET NO. 49

CAL. BY DMH CKD. BY ____

B. SUPPLEMENTAL OXYGEN DEMAND SOURCE - USE METHANOL

$OD = 2.47(NO_3) + 0.87(DO)$ (REF 2)

OD = Oxygen Demand = Methanol (mg/l)
NO_3 = Influent Nitrate concentration as Nitrogen (mg/l)
DO = Dissolved oxygen (mg/l)

$OD = 2.47(15) + 0.87(6)$
$OD = 42.3$ mg/l

42.3 mg/l (600,000) (3) / 1000000 / 24 = 3.2 gallons/hr.
PEAKING FACTOR

Require continuous nitrate monitor & controller to direct chemical feed of methanol. PEAK Feed capacity gallons/hr.

require storage tank for methanol say 1000 gallon tank good for ~ 2 months

HSMM Form Prod - 6

EXHIBIT

PROJECT Study For Elimination of NPDES Violations, Roosevelt Ros, P.R.

TYPE Contract No. N62470-87-C-9009

CONTENTS Bundy WTP - Process Design

Hayes, Seay, Mattern and Mattern
ARCHITECTS • ENGINEERS • PLANNERS

DATE 9/30/88 COMM NO. 1735A

PREL. X FINAL ____ SHEET NO. 50

CAL. BY DMH CKD. BY ____

C. Denitrification reactor

Detention time 2 hr.

$$2\,hr = \frac{Vol}{600{,}000/24}$$

$$Vol = 50{,}000 \text{ gallons} = 6685\ ft^3$$

Check removal efficiency

$$N_E = N_I - \frac{Vol\,[MLVSS\ (R)]}{Q} \quad \text{(REF 1)}$$

N_E = Effluent NO_3 (mg/l)
N_I = Influent NO_3 (mg/l)
R = Denitrification rate = 0.20

$$N_E = 15 - \frac{50{,}000\,(1500)(0.20)}{600{,}000}$$

$N_E = -10$ mg/l Negative concentration indicates near complete removal (80% - 90%)

EXHIBIT

HSMM Form Prod - 6

PROJECT STUDY FOR ELIMINATION OF NPDES VIOLATIONS, ROOSEVELT RDS, P.R.

TYPE CONTRACT No. N62470-87-C-9009

CONTENTS BUNDY WTP - PROCESS DESIGN

Hayes, Seay, Mattern and Mattern
ARCHITECTS • ENGINEERS • PLANNERS

DATE 9/30/88 COMM NO. 1735A

PREL. X FINAL ____ SHEET NO. 51

CAL. BY DMH CKD. BY ____

EXPECTED BIOMASS PRODUCTION:

$\Delta X = 8.34(Q)[0.53(N_I) + 0.19(CO)]$ (REF 1)

ΔX = Biomass creation lb/day

Q = flow (MGD)

$\Delta X = 8.34(.60)[0.53(15) + 0.19(6)]$

ΔX = 45.5 lb/day

CALCULATE REQUIRED SLUDGE WASTAGE RATE

$Q_w = \frac{\Delta X}{8.34(MLVSS)}$

$Q_w = \frac{45.5}{8.3.4(1500)}$ = 0.0036 MGD = 3640 GPD

SLUDGE AGE

$\theta_c = V/Q_w$ $\frac{50000}{3640}$ = 14 DAYS

HP REQUIREMENT

1/2 HP/1000 ft³ (6685) = 3.3 HP

FACILITIES

2-circular tanks 21' x 12' Deep (2' FREEBOARD) w/ 1 1/2 HP down pumping mixer in each tank

HSMM Form Prod - 6

EXHIBIT

PROJECT STUDY FOR ELIMINATION OF NPDES VIOLATION, ROOSEVELT RDS, P.R.

TYPE CONTRACT No. N62470-87-C-9009

CONTENTS BUNDY WTP - PROCESS DESIGN

Hayes, Seay, Mattern and Mattern
ARCHITECTS • ENGINEERS • PLANNERS

DATE 9/30/88 COMM NO. 1735A

PREL. X FINAL ____ SHEET NO. 52

CAL. BY DMH CKD. BY ____

D DENITRIFICATION AERATOR

TANK VOLUME

DETENTION TIME 2 hr.

600,000 /24 (2) = 50,000 gallons = 6685 ft^3

HP REQUIREMENT

1 HP/1000 ft^3 (6685) = 6.8 HP

FACILITIES

2 - CIRCULAR TANKS 21' DIAMETER x 12' DEEP (2' FREEBOARD) w/ a 5 HP floating aerator in each.

E DENITRIFICATION CLARIFIER

TANK VOLUME

1200 gallon per SF per day during peak flow

$\frac{600{,}000}{1200}[2]$ = 1000 ft^2

DEPTH = 12' Vol = 12000 ft^3

OVERFLOW WEIR LENGTH

600,000 ÷ 10,000 = 60 use 60 ft.

HSMM Form Prod - 6

EXHIBIT

PROJECT STUDY FOR ELIMINATION OF NPDES VIOLATIONS ROOSEVELT RDS, P.R.

TYPE CONTRACT No. 62470-87-C-9009

CONTENTS BUNDY WTP - PROCESS DESIGN

Hayes, Seay, Mattern and Mattern
ARCHITECTS • ENGINEERS • PLANNERS

DATE 9/30/88 COMM NO. 1735A

PREL. X FINAL ____ SHEET NO. 53

CAL. BY DMH CKD. BY ____

FACILITIES

2 - Circular tanks 25' x 14' DEEP (2' FREEBOARD) w/ SLUDGE RETURN PUMPS WITH CAPACITY TO RETURN 600,000 gallons/day plus one back up pump.

F YARD PIPING

1. SIZES BASED ON SIZES OF EXISTING PIPES

2. LENGTHS BASED ON EXISTING PLANS VERY ROUGH

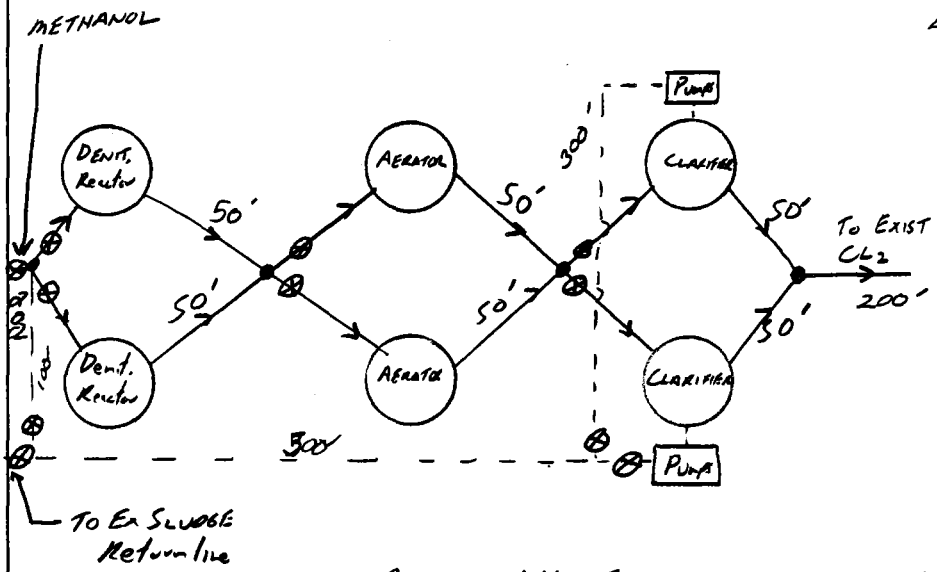

Piping 14" DI 1200'
SLUDGE Return 8" DI 1000'

EXHIBIT

2. INCREASE CHLORINE DOSAGE

NO ADDITIONAL CHLORINE CAPITAL COST

3. DECHLORINATION

NEED TO PROVIDE A SULFONATOR WITH CAPACITY TO FEED ADEQUATE SO_2 TO REMOVE CHLORINE.

ASSUME MAX CL_2 = 6 mg/l AT 600,000 gpd

or $\frac{(600)(6)}{24}(8.34) = 1.25$ lb SO_2/hr

4. pH ADJUSTMENT

PROVIDE CHEMICAL FEED PUMP TO FEED NaOH

HSMM Form Prod - 6

EXHIBIT

PROJECT STUDY FOR ELIMINATION OF NPDES VIOLATIONS, ROOSEVELT Rds, P.R.

TYPE CONTRACT No. N62470-87-C-9009

CONTENTS BASIS OF ESTIMATE

Hayes, Seay, Mattern and Mattern
ARCHITECTS · ENGINEERS · PLANNERS

DATE 12/27/88 COMM NO. 1735A

PREL. X FINAL ____ SHEET NO. 55

CAL. BY DMH CKD. BY ____

FOR EACH WTP EACH PROCESS WILL BE PRICED OUT BASED ON BARE COSTS FOR

CONCRETE
Equipment
YARD Piping

THESE PRICES WILL THEN BE ADJUSTED WITH FACTORS TO COVER CONTRACTOR'S OVERHEAD & Profit, TAXES & Insurance, Incidental Work, & Contingencies.

A. CONCRETE - The cost of concrete shall be by yd^3. The cost will be 120/CY for material and 130/CY for labor based on HSMM's experience with similar projects.

B. Equipment - The cost of equipment shall be the material cost as determined by obtaining manufacturers quotes and the labor cost to install it based on HSMM's past experience.

C. Yard Piping - The cost of yard piping will be by linear foot of each size pipe. The cost will be based on Means adjusted as needed. The cost will include all valves.

D. INCIDENTALS - The cost of miscellaneous sitework & items not included in the above will be accounted for by an adjustment factor of 20% which will be applied to the sum of A, B, & C

EXHIBIT

HSMM Form Prod - 6

PROJECT STUDY FOR ELIMINATION OF NPDES VIOLATIONS, ROOSEVELT RDS, P.R.

TYPE CONTRACT NO. N62470-87-C-9009

CONTENTS BASIS OF ESTIMATE

Hayes, Seay, Mattern and Mattern
ARCHITECTS • ENGINEERS • PLANNERS

DATE 12/27/88 COMM NO. 1735A

PREL. X FINAL ____ SHEET NO. 56

CAL. BY DMH CKD. BY ____

E. CONTRACTOR'S OVERHEAD & PROFIT - WILL BE COMPUTED BY MULTIPLING THE COST OF A + B + C + D BY 25%

F. CONTRACTOR'S TAXES & INSURANCE - WILL BE COMPUTED BY MULTIPLING THE LABOR COST IN A + B + C + D BY 25%

G. CONTINGENCIES - WILL BE COMPUTED BY MULTIPLING THE SUM OF A - F BY 25%.

H ∴ MULTIPLIER

LABOR

D × E × F × G

1.20 × 1.25 × 1.25 × 1.25 = 2.34

MATERIAL

D × E × G

1.20 × 1.25 × 1.25 = 1.88

THESE CONSTRUCTION COSTS WILL THEN BY ADJUSTED TO YIELD 1992 PROJECT COSTS

I. ESCALATE COSTS TO 1992 (ASSUME 5% INFLATION)

$1.05^4 = 1.22$

J ADD COST FOR ENGINEERING DESIGN 20%

K ADD COST FOR RESIDENT INSPECTION TO ASSURE QUALITY CONTROL 5%

L ∴ ADJUSTMENT FACTOR I × J × K

1.22 × 1.20 × 1.05 = 1.54

EXHIBIT

HSMM Form Prod - 6

ESTIMATE

HAYES, SEAY, MATTERN AND MATTERN

ARCHITECTS - ENGINEERS - PLANNERS

PROJECT Study for Elimination of NPDES Violations, Roosevelt Roads, P.R. COMM NO. 1735A

SHEET NO. 57

LOCATION Industrial Area WTP DATE 12/27/88

SUMMARY BY DMH PRICES BY CHECKED BY

ITEM NO.	DESCRIPTION	QUANTITY	UNIT	LABOR UNIT PRICE	LABOR COST	MATERIAL UNIT PRICE	MATERIAL COST	TOTAL COST
1	Oil & Grease Skimmer	1	EA	LS	3000	LS	2000	
	Multiplier				x 2.34		x 1.88	
	1988 Cons Cost				7020		3760	10780
	Adjustment Factor							x 1.54
	1992 Project Cost							16600
2	Denitrification							
	Supplemental Carbon Source							
	Nitrate Monitor & Controller	1	EA		2500		35000	
	Chemical Feed Pump	1	EA		500		750	
	1500 Gallon Storage Tank	1	EA		4000		4000	
	Denitrification Reactors							
	Concrete	112	CY	130	14560	120	13440	
	2 HP Down Pumping Mixer	2	EA	1000	2000	8000	16000	
	Denitrification Aeration							
	Concrete	112	CY	130	14560	120	13440	
	5 HP Floating Aerator	2	EA	1000	2000	3000	6000	
	Denitrification Clarifier							
	Concrete	164	CY	130	21320	120	19680	
	Clarifier Equipment	2	EA	10000	20000	50,000	100000	
	Sludge Return Pumps	1	LS	3500	3500	23,000	22000	

HSMM FORM CEST - 1

FRP78A.JA2385.C264

ESTIMATE

HAYES, SEAY, MATTERN AND MATTERN

ARCHITECTS - ENGINEERS - PLANNERS

PROJECT: STUDY FOR ELIMINATION OF NPDES VIOLATIONS, ROOSEVELT ROADS, P.R.

COMM NO. 1735A

SHEET NO. 58

LOCATION: INDUSTRIAL AREA WTP

DATE: 12/27/88

SUMMARY BY: DMH

PRICES BY:

CHECKED BY:

ITEM NO.	DESCRIPTION	QUANTITY	UNIT	LABOR UNIT PRICE	LABOR COST	MATERIAL UNIT PRICE	MATERIAL COST	TOTAL COST
	YARD PIPING							
	18" DIP	1200	LF	15	18000	40	48000	
	8" DIP	1000	LF	8	8000	12	12000	
	SUBTOTAL				110940		292310	
	MULTIPLIER				x2.34		x1.88	
	1988 CONS. COST				259600		549543	809143
	ADJUSTMENT FACTOR							x1.54
	1992 PROJECT COST							1246080
3	DECHLORINATION							
	BLOCK BUILDING	1	LS		1000		1500	
	SULFONATOR	1	EA		250		1300	
	SCALES & ASSOC. ITEMS	1	LS		500		500	
	PUMP	1	EA		500		2000	
	SUBTOTAL				2250		5300	
	MULTIPLIER				x2.34		x1.88	
	1988 CONS. COST				5265		9964	15229
	ADJUSTMENT FACTOR							x1.54
	1992 PROJECT COST							23453

HSMM FORM CEST - 1

FRP78A.JA2385.C284

ESTIMATE

HAYES, SEAY, MATTERN AND MATTERN

ARCHITECTS - ENGINEERS - PLANNERS

PROJECT Study For Elimination of NPDES Violations, Roosevelt Roads, P.R. COMM NO. 1735A

SHEET NO. 59

LOCATION Industrial Area WTP DATE 12/27/88

SUMMARY BY DMH PRICES BY CHECKED BY

ITEM NO.	DESCRIPTION	QUANTITY	UNIT	LABOR UNIT PRICE	LABOR COST	MATERIAL UNIT PRICE	MATERIAL COST	TOTAL COST
4	PH ADJUSTMENT							
	CHEMICAL FEED PUMP	1	LS		250		750	
	STORAGE TANK	1	EA		1000		2000	
	SUBTOTAL				1250		2750	
	MULTIPLIER				x2.34		x1.88	
	1988 CONS. COST				2925		5170	8095
	ADJUSTMENT FACTOR							x1.54
	1992 PROJECT COST							12466
5	POST AERATION							
	CONCRETE	18.5	CY	130	2405	120	2220	
	1 HP FLOATING AERATOR	1	EA	1000	1000	3000	3000	
	SUBTOTAL				3405		5220	
	MULTIPLIER				x2.34		x1.88	
	1988 CONS. COST				7968		9814	17782
	ADJUSTMENT FACTOR							x1.54
	1992 PROJECT COST							27384
6	REGENERATE TRICKLING FILTER							
	REMOVE & CLEAN TOP 1 FT. OF MEDIA	300	CY	40	12000	10	3000	
	MULTIPLIER				x2.34		x1.88	
	1988 CONS COST				28080		5640	33720
	ADJUSTMENT FACTOR							x1.54
	1992 PROJECT COST							51929

HSMM FORM CEST - 1

FRP78A.JA2385.C264

ESTIMATE

HAYES, SEAY, MATTERN AND MATTERN

ARCHITECTS - ENGINEERS - PLANNERS

PROJECT Study for Elimination of NPDES Violations, Roosevelt Roads, P.R. COMM NO. 1735A

SHEET NO. 60

LOCATION Industrial WTP DATE 12/27/88

SUMMARY BY DmH PRICES BY CHECKED BY

ITEM NO.	DESCRIPTION	QUANTITY	UNIT	LABOR UNIT PRICE	LABOR COST	MATERIAL UNIT PRICE	MATERIAL COST	TOTAL COST
7	Grit Removal							
	Concrete	54	CY	260	14040	120	6480	
	Grit Pump	1	EA	2500	2500	5000	5000	
	Dewatering Screw	1	EA	2500	2500	15000	15000	
	Air Compressor & misc.	LS	—	1000	1000	5000	5000	
	Subtotal				20040		31480	
	Multiplier				x 2.34		x 1.88	
	1988 Cons Cost				46894		59182	106076
	Adjustment Factor							x 1.54
	1992 Project Cost							163357
8	Primary Settling Tank							
	Conc.	66	EA	130	8580	120	7920	
	Clarifier Equipment	1	EA	10000	10000	50,000	50000	
	Sludge Return Pumps	1	LS	3500	3500	22000	22000	
	Subtotal				22080		79920	
	Multiplier				x 2.34		x 1.88	
	1988 Cons Cost				51,667		150,250	201,917
	Adjustment Factor							x 1.54
	1992 Project Cost							310952

HSMM FORM CEST - 1

FRP7BA.JA2385.C264

ESTIMATE

HAYES, SEAY, MATTERN AND MATTERN

ARCHITECTS - ENGINEERS - PLANNERS

PROJECT Study For Elimination of NPDES Violations, Roosevelt Roads, P.R. COMM NO. 1735A

SHEET NO. 61

LOCATION Industrial WTP DATE 12/27/98

SUMMARY BY DMH PRICES BY CHECKED BY

ITEM NO.	DESCRIPTION	QUANTITY	UNIT	LABOR UNIT PRICE	LABOR COST	MATERIAL UNIT PRICE	MATERIAL COST	TOTAL COST
9	ADDITIONAL DRYING BEDS							
	CONC	547	CY	130	71110	120	65640	
	MULTIPLIER				x2.34		x1.88	
	1988 Cons Cost				166397		123,403	289800
	ADJUSTMENT FACTOR							x1.54
	1992 PROJECT COST							446273
10	SERVICE TRICKLING FILTER				7000		3000	
	MULTIPLIER				x2.34		x1.88	
	1988 Cons Cost				16380		5640	22020
	ADJUSTMENT FACTOR							x1.54
	1992 PROJECT COST							33910
11	REPIPE FILTER RECIRCULATION							
	MANHOLE	1	EA	1500	1500	3500	3500	
	6" DIP	30	LF	6	180	8	240	
	-							
	Subtotal				1680		3740	
	MULTIPLIER				x2.34		x1.88	
	1988 Cons Cost				3931		7031	10962
	ADJUSTMENT FACTOR							x1.54
	1992 PROJECT COST							16881

HSMM FORM CEST - 1

FRP78A.JA2385.C264

ESTIMATE

HAYES, SEAY, MATTERN AND MATTERN

ARCHITECTS - ENGINEERS - PLANNERS

PROJECT STUDY FOR ELIMINATION OF NPDES VIOLATIONS, ROOSEVELT ROADS, P.R. COMM NO. 1735A

SHEET NO. 62

LOCATION INDUSTRIAL WTP DATE 1/4/89

SUMMARY BY RFC PRICES BY _____ CHECKED BY _____

ITEM NO.	DESCRIPTION	QUANTITY	UNIT	LABOR UNIT PRICE	LABOR COST	MATERIAL UNIT PRICE	MATERIAL COST	TOTAL COST
	CLEAN SLUDGE & GRIT							
	FROM AERATED LAGOON							
	Dewater Lagoon	3	day	300.00	900		—	900
	Lime Sludge / Grit	1	ton	450.00	450	50.00	50	500
	Remove Sludge / Grit	5	day	2000.00	10,000		—	10,000
	to Sanitary Landfill							
	Subtotal				11350		50	
	Multiplier				x 2.34		x 1.88	
	1988 Cons. Cost				26559		94	26653
	Adjustment Factor							x 1.54
	1992 Project Cost							41,045

HSMM FORM CEST - 1

FRP78A.JA2385.C284

ESTIMATE

HAYES, SEAY, MATTERN AND MATTERN

ARCHITECTS - ENGINEERS - PLANNERS

PROJECT: STUDY FOR ELIMINATION OF NPDES VIOLATIONS, ROOSEVELT ROADS P.R. — COMM NO. 1735A

SHEET NO. 63

LOCATION: CAPEHART WTP — DATE: 1/4/89

SUMMARY BY: DMH — PRICES BY: — CHECKED BY:

ITEM NO.	DESCRIPTION	QUANTITY	UNIT	LABOR UNIT PRICE	LABOR COST	MATERIAL UNIT PRICE	MATERIAL COST	TOTAL COST
1	DENITRIFICATION							
	SUPPLEMENTAL OXYGEN DEMAND							
	NITRATE MONITOR & CONTROLLER	1	EA		2500		3500	
	CHEMICAL FEED PUMP	1	EA		500		750	
	2000 GALLON STORAGE TANK	1	EA		4500		4500	
	DENITRIFICATION REACTOR							
	CONCRETE	69	CY	130	8970	120	8280	
	1½ HP DOWNPUMPING MIXER	2	EA	1000	2000	8000	16000	
	DENITRIFICATION AERATOR							
	CONCRETE	69	CY	130	8970	120	8280	
	DIFFUSERS	20	EA	8	160	8	160	
	AIR PIPING	500	LF	2	1000	3	1500	
	DENITRIFICATION CLARIFIER							
	CONCRETE	100	CY	130	13000	120	12000	
	CLARIFIER EQUIPMENT	2	EA	10000	20000	50000	100000	
	SLUDGE RETURN PUMPS			3000	3000	18000	18000	
	YARD PIPING							
	12" DIP	1200	LF	10	12000	32	38400	
	8" DIP	1000	LF	8	8000	12	12000	
	PUMP STATION							
	CONCRETE	38	CY	130	4940	120	4560	
	PUMPS	LS			5000		11000	
	MISC ELEC & EQUIP	LS			1000		2000	

HSMM FORM CEST - 1

FRP78A.JA2385.C284

ESTIMATE

HAYES, SEAY, MATTERN AND MATTERN

ARCHITECTS - ENGINEERS - PLANNERS

PROJECT Study for Elimination of NPDES Violations, Roosevelt Roads P.R. COMM NO. 1735A

SHEET NO. 64

LOCATION Caribbean Area DATE 1/4/89

SUMMARY BY DMH PRICES BY CHECKED BY

ITEM NO.	DESCRIPTION	QUANTITY	UNIT	LABOR UNIT PRICE	LABOR COST	MATERIAL UNIT PRICE	MATERIAL COST	TOTAL COST
	SUBTOTAL				95540		240930	
	MULTIPLIER				x 2.34		x 1.88	
	1988 Cons Cost				223564		452948	676512
	ADJUSTMENT FACTOR							x 1.54
	1992 PROJECT COST							1041828
2	DECHLORINATION							
	BLOCK BUILDING	1	EA		1000		1500	
	SULFONATOR	1	EA		250		1300	
	SCALES & ASSOC ITEMS	LS	-		500		500	
	PUMPS	1	EA		500		2000	
	Subtotal				2250		5300	
	MULTIPLIER				x 2.34		x 1.88	
	1988 Cons Cost				5265		9964	15229
	ADJUSTMENT FACTOR							x 1.54
	1992 PROJECT COST							23453
3	pH Adjustment							
	CHEMICAL FEED PUMP	1	EA		250		750	
	STORAGE TANK	1	EA		1000		2000	
	Subtotal				1250		2750	
	MULTIPLIER				x 2.34		x 1.88	
	1988 Cons Cost				2925		5170	8095
	ADJUSTMENT FACTOR							x 1.54
	1992 PROJECT COST							12466

HSMM FORM CEST - 1

FRP78A.JA2385.C284

ESTIMATE

HAYES, SEAY, MATTERN AND MATTERN

ARCHITECTS - ENGINEERS - PLANNERS

PROJECT Study for Elimination of NPDES Violations, Roosevelt Roads, P.R. COMM NO. 1735A

SHEET NO. 65

LOCATION Capehart WTP DATE 1/4/89

SUMMARY BY DMH PRICES BY CHECKED BY

ITEM NO.	DESCRIPTION	QUANTITY	UNIT	LABOR UNIT PRICE	LABOR COST	MATERIAL UNIT PRICE	MATERIAL COST	TOTAL COST
4	Post Aeration							
	Concrete	12	CY	130	1560	120	1440	
	Diffusers	10	EA	8	80	8	80	
	Air Piping	100	LF	3	300	2	200	
	Subtotal				1940		1720	
	Multiplier				x2.34		x1.88	
	1988 Cons Cost				4540		3234	7774
	Adjustment Factor							x1.54
	1992 Project Cost							11972
5	Grit Removal							
	Concrete	54	CY	260	14040	120	6480	
	Grit Pump	1	EA	2500	2500	5000	5000	
	Dewatering Screw	1	EA	2500	2500	15000	15000	
	Air Compressor & Misc.	LS	-	1000	1000	5000	5000	
	Subtotal				20040		31480	
	Multiplier				x2.34		x1.88	
	1988 Cons Cost				46894		59182	106076
	Adjustment Factor							x1.54
	1992 Project Cost							163,357

HSMM FORM CEST - 1

FRP78A.JA2385.C284

QUANTITY & COST ESTIMATE

Hayes, Seay, Mattern and Mattern
ARCHITECTS · ENGINEERS · PLANNERS

PROJECT Study For Elimination of NPDES Violations, Roosevelt Roads, P.R.
COMM. NO. 1735 A
SHEET NO. 66
LOCATION Capehart WTP
DATE 12/30/88
SUMMARY BY RFC
PRICES BY
CHECKED BY

ITEM NO.	DESCRIPTION	UNIT	QUANTITY	UNIT COST	TOTAL
	Reduce Capehart WTP				
	Capacity to 0.3 mgd by				
	Diverting Flow to				
	Bundy WTP				
1	Rebuild Lift Station				
	at Bldg 1471				
	New 400 gpm pumps	ea	2	11,000	22,000
	and 25-HP motors				
	Replace valves & piping	ls	1	—	6,000
	100 kw emergency	ea	1	29,300	29,300
	generator, complete				
	8" force main, complete	lf	16,000	20.00	320,000
	Subtotal				$377,300
	Subcontractor O&P		25%		94,325
	General Contractor O&P		25%		94,325
	Subtotal				$565,950
	Construction Contingency		25%		141,490
	Escalation to FY92	x	1.54		382,000
	and Engr & Administration				
	Total				$1,089,440

HSMM Form CEst - 2

QUANTITY & COST ESTIMATE

Hayes, Seay, Mattern and Mattern
ARCHITECTS · ENGINEERS · PLANNERS

PROJECT Study For Elimination of NPDES Violations, Roosevelt Roads, P.R.
COMM. NO. 1735 A
SHEET NO. 67
LOCATION Capehart WTP
DATE 12/30/89
SUMMARY BY RFC
PRICES BY
CHECKED BY

ITEM NO.	DESCRIPTION	UNIT	QUANTITY	UNIT COST	TOTAL
	Reduce Capehart WTP Cap.				
2	Capehart WTP Modifications				
	Modify raw sewage lift stations	ls	1	—	2,000
	New yard piping	ls	1	—	8,000
	Modify aeration tank	ls	1	—	20,000
	Methanol feed system	ls	1	—	46,750
	Subtotal				$ 76,750
	Subcontractor O&P	25%			19,190
	General Contractor O&P		25%		19,190
	Subtotal				115,130
	Construction Contingency		25%		$ 28,790
	Escalation to FY 92	x	1.54		77,710
	and Engr + Administration				
	Total				$ 221,620

HSMM Form CEst - 2

QUANTITY & COST ESTIMATE

Hayes, Seay, Mattern and Mattern
ARCHITECTS · ENGINEERS · PLANNERS

PROJECT Study For Elimination of NPDES Violations, Roosevelt Roads, P.R.
COMM. NO. 1735 A
SHEET NO. 68
LOCATION Capehart WTP
DATE 12/30/89
SUMMARY BY RFC
PRICES BY
CHECKED BY

ITEM NO.	DESCRIPTION	UNIT	QUANTITY	UNIT COST	TOTAL
	Divert All Capehart WTP				
	Flow to Bundy WTP				
1.	New Lift Sta at WTP				
	1170 gpm pumps and	ea	2	19,500	39,000
	100-HP motors				
	Lift sta valves & piping	ls	1	—	28,000
	Lift sta structure	ls	1	—	60,000
	600 kw emergency	ea	1	102,000	102,000
	generator, complete				
					$229,000
2	8" force main, complete	lf	21,400	20.00	428,000
	Subtotal				$657,000
	Subcontractor O&P	25%			164,250
	General Contractor O&P	25%			164,250
	Subtotal				$985,500
	Construction Contingency		25%		246,375
	Escalation to FY 92		x1.5%		665,200
	and Engr & Administration				
	Total				$1,897,075

HSMM Form CEst - 2

ESTIMATE

Hayes, Seay, Mattern and Mattern
ARCHITECTS · ENGINEERS · PLANNERS

PROJECT Study For Elimination of NPDES Violations, Roosevelt Roads, P.R.
COMM. NO. 1735 A
SHEET NO. 69
LOCATION Bundy WTP
DATE 7 Oct 88
SUMMARY BY DMH PRICES BY DMH CHECKED BY

ITEM NO.	DESCRIPTION	QUANTITY	UNIT	LABOR UNIT PRICE	LABOR COST	MATERIAL UNIT PRICE	MATERIAL COST	TOTAL COST
1	DENITRIFICATION							
	SUPPLEMENTAL OXYGEN DEMAND SOURCE							
	Nitrate monitor & controller	1	EA	LS	2500	LS	35000	37500
	Chemical feed pump	1	EA	LS	500	LS	750	1250
	1500 gallon storage tank	1	EA	LS	4000	LS	4000	8000
	DENITRIFICATION REACTOR							
	CONCRETE	84	CY	130	10920	120	10080	21000
	1½ HP Down Pumping Mixer	2	EA	1000	2000	8000	16000	18000
	DENITRATION AERATOR							
	CONCRETE	84	CY	130	10920	120	10080	21000
	5HP FLOATING AERATORS	2	EA	1000	2000	3000	6000	7000
	DENITRIFICATION CLARIFIER							
	CONCRETE	118	CY	130	15340	120	14160	29500
	CLARIFIER Equipment	2	EA	10000	20000	50000	100000	120000
	SLUDGE Return Pump	1	LS	3000	3000	18000	18000	21000
	YD. PIPING							
	14" DIP	1200	LF	12.00	14400	36.00	43200	57600
	8" DIP	1000	LF	8.00	8000	12.00	12000	20000
	Subtotal				93580		269270	
	Multiplier				x 2.34		x 1.88	
	CONSTRUCTION COST				218977		506228	725205
	ADJUSTMENT FACTOR							x 1.54
	1992 Project Cost							1116816

HSMM FORM NO. 43

ESTIMATE

HAYES, SEAY, MATTERN AND MATTERN

ARCHITECTS - ENGINEERS - PLANNERS

PROJECT Study for Elimination of NPDES Violations, Roosevelt Roads, P.R. COMM NO. 1735A

SHEET NO. 70

LOCATION Bundy WTP DATE 1/4/89

SUMMARY BY DMH PRICES BY CHECKED BY

ITEM NO.	DESCRIPTION	QUANTITY	UNIT	LABOR UNIT PRICE	LABOR COST	MATERIAL UNIT PRICE	MATERIAL COST	TOTAL COST
2	Dechlorination							
	Block Building	1	EA		1000		1500	
	Sulfonator	1	EA		250		1300	
	Scales & Assoc. Items	1	EA		500		500	
	Pumps		LS		500		2000	
	Subtotal				2250		5300	
	Multiplier				x2.34		x1.88	
	1988 Cons Cost				5265		9964	15229
	Adjustment Factor							x 1.54
	1992 Project Cost							23453
3	pH Adjustment							
	Chemical Feed Pump	1	EA		250		750	
	Storage Tank	1	EA		1000		2000	
	Subtotal				1250		2750	
	Multiplier				x2.34		x1.88	
	1988 Const Cost				2925		5170	8095
	Adjustment Factor							x1.54
	1992 Project Cost							12466

HSMM FORM CEST - 1

FRP78A.JA2385.C284

PROJECT Study For Elimination of NPDES Violations, Roosevelt Rds, P.R.

TYPE Contract No. N62470-87-C-9009

CONTENTS Holding Tanks - O/W Separators

Hayes, Seay, Mattern and Mattern
ARCHITECTS · ENGINEERS · PLANNERS

DATE 10/7/88 COMM NO. 1735A

PREL. ✓ FINAL ____ SHEET NO. 71

CAL. BY WCH CKD. BY ____

Basis of Design - O/W Separators and Holding Tanks

1. API gravity separators will be used to remove free oils and greases.
2. Emulsified oils will be chemically broken and then gravity separated.
3. Flows are not known at this time. They will be assumed by using two 1" hose nozzles at a pressure of 35 psig. @ Nozzle*
4. Preliminary cost estimates will be based on these assumptions. Actual flow data are needed to properly size these separators. Further, bench-scale treatability tests are needed to determine if emulsified oils are present in the wash water.
5. Holding tanks will be fiberglass, double-wall construction with a valved outlet. No monitoring wells will be included in the design or cost estimate at this time. Size will be case-by-case basis on the larger of runoff quantity, washdown volume or spill volume + washdown.

* Fire hoses will be assumed to be 4" diameter

EXHIBIT

HSMM Form Prod - 6

PROJECT Study For Elimination of NPDES Violations, Roosevelt Rds, P.R.

TYPE Contract No. N62470-87-C-9009

CONTENTS HOLDING TANKS O/W SEPARATORS

Hayes, Seay, Mattern and Mattern
ARCHITECTS · ENGINEERS · PLANNERS

DATE 10/7/88 COMM NO. 1735A

PREL. ✓ FINAL ____ SHEET NO. 72

CAL. BY WCH CKD. BY ____

Bldg 2036, 379, 1980 and 31

Battery charging rooms require quench tanks and holding tanks when the batteries are overcharged and overheated. Another option may be to use automatic chargers that cut off when maximum charge is reached. However, highest cost scenario will be used at this time for budgeting purposes. Quench trough will be capable of handling a maximum of ten batteries.

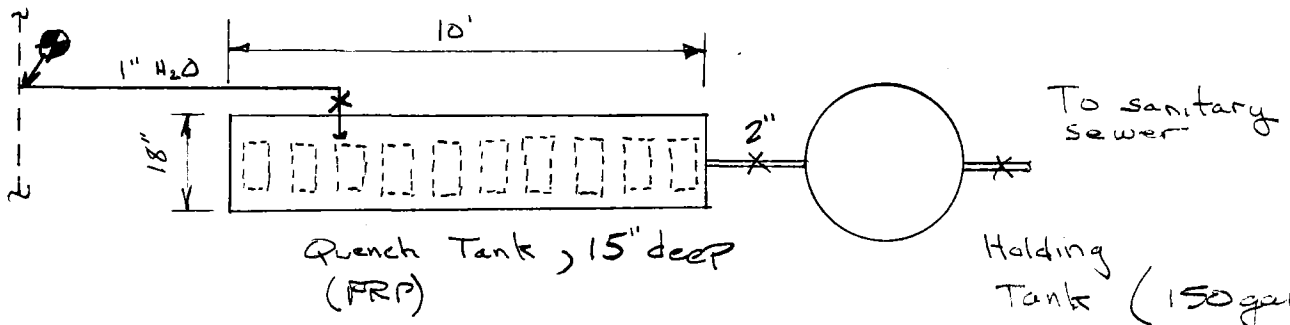

NEED:

1) portable pH meter
2) $NaHCO_3$ addition mixed with paddle manually
3) Conc pad
4) Trough Stand

PLAN VIEW
QUENCH TROUGH AND HOLDING TANK

Note: Cost for automatic shut-off battery charger is ≈ $250 ea (Sheppards Auto)

EXHIBIT

HSMM Form Prod - 6

PROJECT Study For Elimination of NPDES Violations, Roosevelt Roads, P.R.

TYPE Contract No. N62470-87-C-9009

CONTENTS HOLDING TANKS & O/W SEPARATOR

Hayes, Seay, Mattern and Mattern
ARCHITECTS • ENGINEERS • PLANNERS

DATE 10/11/88 COMM NO. 1735A

PREL. ✓ FINAL ____ SHEET NO. 73

CAL. BY WCH CKD. BY ____

Bldg 825 - Firefighting Area

Estimated volume of water will be based on two 4" fire hoses operating for 10 minutes.

$\Delta P = 35$ psi, $D_2/D_1 = 3$

$Q = CA\sqrt{2gH}$

$C = 0.9$

$D = 4/3$, $1.33''/12'' = 0.11'$

$A = \frac{\pi (.11)^2}{4} = 0.0097$ SF

$H = 35 \text{ psi} \times 1/0.433 = 81'$

$Q = 0.9 \times 0.0097^{SF} \sqrt{2 \times 32.2 \times 81^{FT}}$

$Q = 0.63$ CFS per nozzle

$Q = 1.26$ CFS @ 2 nozzles

Total volume @ 10 minutes operation

$V = 1.26 \text{ CFS} \times 60 \text{ s/m} \times 10 \text{ minutes} \times 7.48 \text{ gal/cF}$

$V = 5654$ gallons ⇒ Holding tank volume @ 6000 gallons

Size separator for 50 gpm (2 hr discharge)

HSMM Form Prod - 6

EXHIBIT

PROJECT Study For Elimination of NPDES Violations, Roosevelt Roads, P.R.

TYPE Contract No. N62470-87-C-9009

CONTENTS HOLDING TANKS & O/W SEPARATORS

Hayes, Seay, Mattern and Mattern
ARCHITECTS • ENGINEERS • PLANNERS

DATE 10/11/88 COMM NO. 17354

PREL. ✓ FINAL ____ SHEET NO. 74

CAL. BY WRH CKD. BY ____

Bldg 825 Cont'd

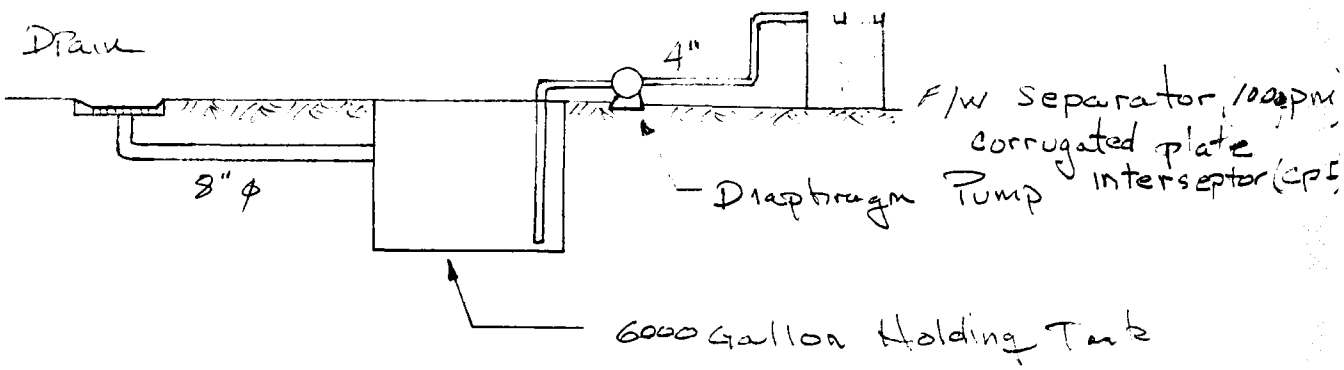

ELEVATION VIEW

HOLDING TANK AND FUEL/WATER SEPARATOR

HSMM Form Prod - 6

EXHIBIT

PROJECT Study For Elimination of NPDES Violations, Roosevelt Roads, P.R.

TYPE Contract No. N62470-87-C-9009

CONTENTS Holding Tanks & O/W Separators

Hayes, Seay, Mattern and Mattern
ARCHITECTS • ENGINEERS • PLANNERS

DATE 10/11/88 COMM NO. 1735A

PREL. ✓ FINAL ____ SHEET NO. 75

CAL. BY WLH CKD. BY ____

Bldg 1673, 826, 369

Estimated flow
$D_2 = 1''$

$D_2/D_1 = 3$ $\Delta P = 35 psi$

$A = \pi \left(\frac{1/3}{12}\right)^2 / 4 = 6 \times 10^{-4} SF$

$Q = 0.9 \cdot 6 \times 10^{-4} \sqrt{2 \cdot 32.2 \cdot 81^{FT}}$

$Q = 0.04$ CFS

@ 2 hoses $Q = 0.08$ CFS or 18 gpm

∴ Design flow will be 0.10 CFS or 20 gpm

Bldg 2036 - Bldg 2036 is a central receiving station for oily wastewater which contains emulsified oils. Flow at this facility will be based on 100 gpm.

USMM Form Prod - 6

EXHIBIT

PROJECT Study For Elimination of NPDES Violations, Roosevelt Roads, P.R.

TYPE Contract No. N62470-87-C-9009

CONTENTS HOLDING TANKS - O/W SEPARATORS

Hayes, Seay, Mattern and Mattern
ARCHITECTS • ENGINEERS • PLANNERS

DATE 10/11/88 COMM NO. 1735A

PREL. ✓ FINAL ____ SHEET NO. 76

CAL. BY WCH CKD. BY ____

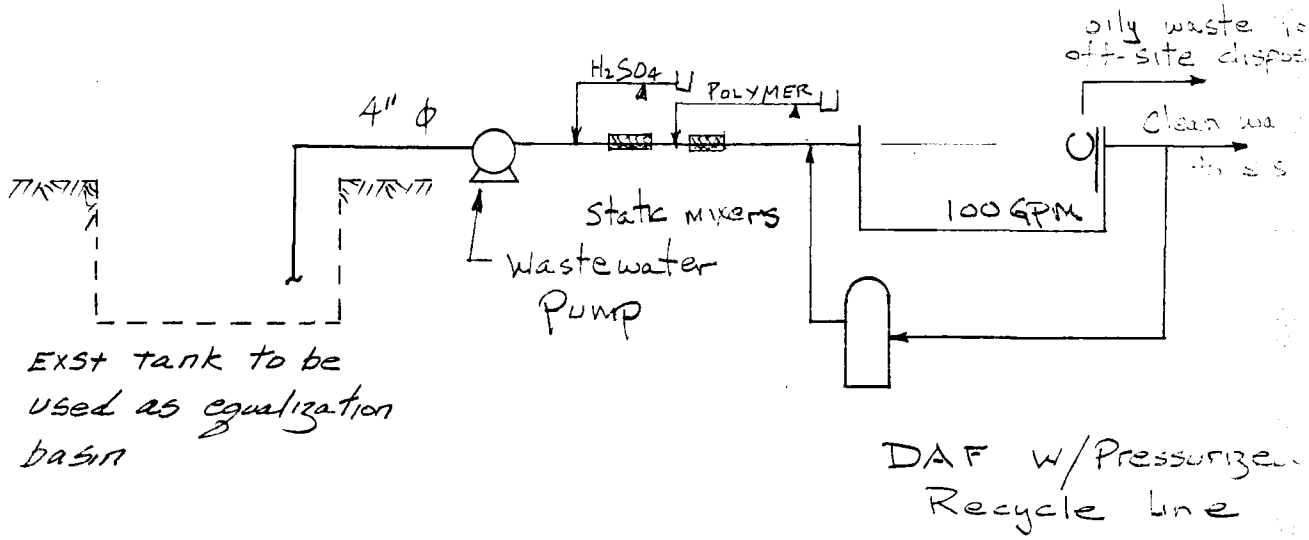

PROCESS FLOW DIAGRAM

Estimated area in SF @ 50 SF

HSMM Form Prod - 6

EXHIBIT

QUANTITY & COST ESTIMATE

Hayes, Seay, Mattern and Mattern
ARCHITECTS · ENGINEERS · PLANNERS

PROJECT Study For Elimination of NPDES Violations, Roosevelt Roads, P.R.
COMM. NO. 1735A
SHEET NO. 77
LOCATION Bldg 2036, 379, 1980 & 31
DATE 10/11/88
SUMMARY BY WGH PRICES BY MEANS etal CHECKED BY

ITEM NO.	DESCRIPTION	UNIT	QUANTITY	UNIT COST	TOTAL
1	Fiberglass Trough	EA	1	500	$ 500
	10'L x 1.5'W x 1.25'D				
2	Fiberglass Tank, 150 gal	EA	1	500	500
3	1" Galv Water Line	LF	30	7.15	215
4	2" Drain Line, PP	LF	30	10.60	318
5	Connect 1" Water Line	LS	1	75	75
6.	pH Meter, portable	EA	1	200	200
7	Trough Stand, 2x4 Wood	EA	1	200	200
8	Conc Pad, 4" (1CY)	LS	1	110	110
	Subtotal				$ 2118
	Subcontractor O&P @ 25%				530
	General Contractor O&P @ 25%				530
	Subtotal				$ 3178
	Constructure Contingency @ 25%				795
	TOTAL CONSTRUCTION COST				$ 3973
			SAY		$ 4000.00
			ADJUSTMENT FACTOR		1.61
	No Freight included		1993 Project Cost		$ 6500

QUANTITY & COST ESTIMATE

Hayes, Seay, Mattern and Mattern
ARCHITECTS · ENGINEERS · PLANNERS

PROJECT Study For Elimination of NPDES Violations, Roosevelt Roads, P.R.
COMM. NO. 1735A
SHEET NO. 78
LOCATION BLDG 825
DATE 10/11/88
SUMMARY BY WCH PRICES BY MEANS CHECKED BY

ITEM NO.	DESCRIPTION	UNIT	QUANTITY	UNIT COST	TOTAL
1.	6000 Gal Holding Tank	EA	1	7000	7000
2.	100 gpm Separator (F/W)	EA	1	20,000	20,000
3	100 gpm Diaphragm Pump	EA	1	2500	2500
4	Air compressor	EA	1	1831	1831
5	8" Gravity Sewer	LF	40	14.00	560
6.	4" Force Main	LF	30	9.14	274
7.	Controls	LS	1	800	800
8	Earthwork	CY	75	7.50	563
9.	Fuel Pumps, 10 gpm	EA	1	1700	1700
10.	Fuel Holding Tank, 250 gal	EA	1	1300	1300
11	Air Line, 1"	LF	30	7.15	215
12	Select Fill	CY	20	5.00	100
13	Seeding	LS	1	100	100
14	Tie Down Slab	LS	1	1500	1500
	Subtotal				$ 38,443
	Subcontractor O&P @ 25%				9611
	General Contractor O&P @ 25%				9611
	Subtotal				$ 57,665
	Construction Contingency (25%)				14,416
	TOTAL CONSTRUCTION COST				$ 72,081
			SAY		$ 72,000
			ADJUSTMENT FACTOR		1.61
			1993 PROJECT COST		116,000
	Freight Not Included				

HSMM Form CEst - 2

QUANTITY & COST ESTIMATE

Hayes, Seay, Mattern and Mattern
ARCHITECTS · ENGINEERS · PLANNERS

PROJECT Study For Elimination of NPDES Violations, Roosevelt Roads, P.R.
COMM. NO. 1735 A
SHEET NO. 79
LOCATION BLDG 2036 (1673, 826, 369)
DATE 10/12/88
SUMMARY BY WCH
PRICES BY MEANS etal
CHECKED BY

ITEM NO.	DESCRIPTION	UNIT	QUANTITY	UNIT COST	TOTAL
1.	100 GPM Wastewater Pump	EA	1	1800	$ 1800
2.	Chemical Storage Tanks	EA	2	50	100
	55 gallon capacity				
3.	Static Mixers	EA	2	600	1200
4.	Pump Controls	LS	1	800	800
5.	Chemical Feed Pump	EA	2	600	1200
6.	Chemical Feed Lines, SS	LF	30	2	60
7	Dissolved Air Flotation 100 GPM	EA	1	80,000	80,000
8	6" Sewer Line	LF	20	10.09	202
9	4" Suction / Discharge Line	LF	20	9.14	183
	Subtotal				$ 85,545
	Subcontractor O&P		25%		21,386
	General Contractor O&P		25%		21,386
	Subtotal				$ 128,317
	Construction Contingency			25%	32,079
	TOTAL CONSTRUCTION COST				$ 160,396
			SAY		$ 161,000
			ADJUSTMENT FACTOR		1.61
			1993 PROJECT COST		259,000
	Freight Not Included				

nSMM form CEsL - 2

QUANTITY & COST ESTIMATE

Hayes, Seay, Mattern and Mattern
ARCHITECTS · ENGINEERS · PLANNERS

PROJECT Study For Elimination of NPDES Violations, Roosevelt Roads, P.R.
COMM. NO. 1735 A
SHEET NO. 80
LOCATION Pilot Study, Trickling Filters
DATE 11/1/88
SUMMARY BY RFC
PRICES BY RFC
CHECKED BY

ITEM NO.	DESCRIPTION	UNIT	QUANTITY	UNIT COST	TOTAL
	Plant Modifications				
	New Effluent Manhole	LS	1	3,000	3,000
	Methanol Feed System	LS	1	3,000	3,000
					$ 6,000
	Supervision				
	Manhours, 10 weeks	MH	400	39	15,600
	Per Diem	Days	70	105	7,350
	Air fare	RT	1	750	750
	Car Rental	wk	10	250	2,500
					$ 26,200
	Analysis				
	BOD_5	EA	224	22	4,928
	Ammonia	EA	224	15	3,360
	Nitrate	EA	224	15	3,360
	Nitrite	EA	224	15	3,360
	pH	EA	224	9	2,016
	Alkalinity	EA	224	9	2,016
	Sampling and Travel	MH	120	15	1,800
					$ 20,840
	Total				$ 53,040

HSMM Form CEst - 2