N00174.AR.000818
NSWC INDIAN HEAD
5090.3a

FINAL SITE 47 IN SITU CHEMICAL OXIDATION PILOT STUDY TECHNOLOGY PERFORMANCE EVALUATION NSWC INDIAN HEAD MD

10/01/2011

CH2M HILL

Final

Site 47 *In Situ* Chemical Oxidation Pilot Study Technology Performance Evaluation

Naval Support Facility Indian Head
Indian Head, Maryland

Contract Task Orders 051 and 165

October 2011

Prepared for

Department of the Navy
Naval Facilities Engineering Command
Washington

Under the

LANTDIV CLEAN III Program
Contract N62470-02-D-3052

Prepared by

CH2MHILL

Chantilly, Virginia

Contents

Acronyms and Abbreviations ..... **v**

1 Introduction **1-1**

2 Background **2-1**
2.1 Site History and Characteristics 2-1
2.2 Nature and Extent of Contamination 2-2

3 Field Activities **3-1**
3.1 Overview of Pilot Study Design 3-1
3.2 Deviations from the Work Plan 3-1
3.3 Installation of Monitoring Wells, Injection Wells, and Passive Soil Vents 3-2
3.4 Baseline Soil and Groundwater Sampling 3-3
3.5 *In Situ* Chemical Oxidation Injection with Activated Sodium Persulfate 3-3
3.6 Two-Month Post-Injection Groundwater Sampling 3-4
3.7 Six-Month Post-Injection Soil and Groundwater Sampling 3-5
3.8 Investigation-derived Waste Management 3-6
3.9 Subcontractors 3-7

4 Results and Performance Assessment **4-1**
4.1 CT Transformation Mechanisms 4-1
4.2 Three-Dimensional Geologic Cross Sections 4-1
4.3 COC Concentration Trends and Mass Reduction Estimate 4-2
4.3.1 COC Concentration Trends 4-2
4.3.2 Chloride 4-4
4.3.3 TOC 4-4
4.3.4 Three-Dimensional Chemistry Model 4-5
4.3.5 Mass Reduction Estimate 4-6
4.4 Compatibility of Alkaline-activated Persulfate with Natural Attenuation 4-7
4.5 Metals Solubilization 4-8
4.6 Impact to Current Site Use 4-9
4.7 Refinement of Field Design Parameters 4-9
4.7.1 ROI 4-9
4.7.2 Oxidant Dosage and Injection Flow Rates 4-10

5 Conclusions and Recommendations **5-1**
5.1 Conclusions 5-1
5.1.1 Findings 5-1
5.1.2 Challenges, Lessons Learned, and Success Stories 5-2
5.2 Recommendations 5-3
5.3 Conceptual Approach for Full-Scale Remedy 5-3

6 References **6-1**

Tables

3-1 Field Activity Deviations from the Work Plan
3-2 Screen Intervals for Monitoring Wells, Injection Wells, and Soil Vents
3-3 Oxidant Mass Distribution

4-1 Groundwater and Soil Sampling and Analysis Summary
4-2 Field Water Quality Parameters
4-3 Water Level Measurements and Elevations
4-4 Ethene and Methane COC Results for Baseline, 2-Month, and 6-Month Post-Injection
4-5 Estimate of CT and PCE Mass Reduction for Baseline and 6-Month Post-Injection
4-6 Baseline Redox Couple Concentrations in the Shallow Aquifer
4-7 2-Month Post-Injection Redox Couple Concentrations in the Shallow Aquifer
4-8 6-Month Post-Injection Redox Couple Concentrations in the Shallow Aquifer
4-9 Metal Solubilization Evaluation for Groundwater
4-10 Metals Data for Soil

Figures

1-1 Facility Map
1-2 Pilot Study Target Area

2-1 Site Location Map

3-1 Monitoring and Injection Well Locations
3-2 Passive Soil Gas Venting Locations

4-1 Geological Cross Sections
4-2 3-Dimentional Geological Cross Sections
4-3 Performance Monitoring Soil and Groundwater Data for Chlorinated Ethene COCs
4-4 Performance Monitoring Soil and Groundwater Data for Chlorinated Methane COCs
4-5 Performance Monitoring Soil and Groundwater Data for Inorganic COCs
4-6 2-Dimentional CT Plumes – Baseline and 6-Month Post Injection
4-7 3-Dimentional CT Plumes – Baseline and 6-Month Post Injection
4-8 2-Dimentional PCE Plumes – Baseline and 6-Month Post Injection
4-9 3-Dimentional PCE Plumes – Baseline and 6-Month Post Injection
4-10 Change in Maximum Concentrations

5-1 Conceptual Design of Remediation Alternative 2

Appendices

A Compilation of Photographs
B Soil Boring Logs, Well Completion Diagrams, and Survey Data
C Raw and Detect Analytical Data
D Additional Plan View Cross-sections and Three-dimensional Plume Maps
E Electrical Conductivity Profiling Results
F Conceptual Design and Cost Estimate

Acronyms and Abbreviations

µg/L	micrograms per liter
amsl	above mean sea level
bgs	below ground surface
CF	chloroform
COC	contaminant of concern
CT	carbon tetrachloride
DCA	dichloroethane
DCE	dichloroethene
DNAPL	dense non-aqueous phase liquid
DO	dissolved oxygen
DPT	direct-push technology
EC	electrical conductivity
EPA	U.S. Environmental Protection Agency
FS	Feasibility Study
ft^2	square feet
ft/day	foot (feet) per day
g/L	grams per liter
gpm	gallons per minute
IDW	investigation-derived waste
IHIRT	Indian Head Installation Restoration Team
ISCO	*in situ* chemical oxidation
LEL	low explosive levels
MDE	Maryland Department of the Environment
MDL	method detection limit
MEE	methane, ethene, and ethane
mg/kg	milligram(s) per kilogram
mg/L	milligram(s) per liter
mS/m	miliSiemens per meter
MVS	Mining Visualization System
Navy	U.S. Department of the Navy
NEESA	Naval Energy and Environment Support Activity
NSF-IH	Naval Support Facility Indian Head
ORP	oxidation-reduction potential
PCE	tetrachloroethene
RI	Remedial Investigation

RCI	reactivity, corrosivity, and ignitability
ROI	radius of influence
SRG	site remediation goal
SVOC	semivolatile organic compound
TAL	target analyte list
TCA	trichloroethane
TCE	trichloroethene
TCLP	Toxicity Characteristic and Leaching Procedure
TOC	total organic carbon
VC	vinyl chloride
VOC	volatile organic compound

SECTION 1

Introduction

This report presents the *in situ* chemical oxidation (ISCO) pilot study activities and results for Site 47 (Mercuric Nitrate Disposal Area) shallow groundwater at Naval Support Facility Indian Head (NSF-IH) in Indian Head, Maryland (Figure 1-1). This report was prepared under the U.S. Department of the Navy (Navy), Naval Facilities Engineering Command Washington, Comprehensive Long-term Environmental Action, Navy; Contract Number N62470-02-D-3052, Contract Task Orders 051 and 165. CH2M HILL has prepared this report for use by the Indian Head Installation Restoration Team (IHIRT), which comprises the Navy, U.S. Environmental Protection Agency (EPA) Region III, Maryland Department of the Environment (MDE), and NSF-IH.

A pilot study was conducted to develop the design parameters for full-scale implementation of sodium persulfate activated with sodium hydroxide. This oxidant was selected for the pilot study based on the results of the bench-scale study (CH2M HILL, 2007). The rationale for the pilot study is presented in the report entitled *Final Site 47 Pilot Study Work Plan Technical Memorandum, NSF-IH, Indian Head, Maryland* (herein referred to as the Work Plan; CH2M HILL, 2008a). Alkaline-activated persulfate was field-tested to assess its ability to treat residual carbon tetrachloride (CT) and tetrachloroethene (PCE) dense non-aqueous phase liquid (DNAPL). The targeted area for the pilot study was approximately 3,750 square feet (ft^2), a quarter of the total inferred residual DNAPL area of approximately 15,000 ft^2 (Figure 1-2). The subsurface depth interval targeted for treatment was the shallow aquifer from approximately 6 feet to 18 feet below ground surface (bgs).

The specific objectives of the pilot study, as documented in the Work Plan, were:

- Gain data for design parameters (oxidant loading, targeted vertical interval for treatment, delivery method, and radius of influence)
- Assess impacts on current site
- Assess the compatibility of the source treatment technology with natural attenuation
- Decrease the mass of organic contaminants of concern (COCs)
- Obtain cost information for the full-scale remedy

The overall performance of the pilot study was evaluated based on the results of three monitoring events: (1) baseline, (2) 2-month post-injection, and (3) 6-month post-injection.

The remainder of this document is divided into the following sections:

- Section 2 - Background
- Section 3 - Field Activities
- Section 4 – Results and Performance Assessment
- Section 5 – Conclusions and Recommendations
- Section 6 – References

Site descriptions and background information used in this report are contained in the following reports:

Final Remedial Investigation (RI), *Site 47 – Mercuric Nitrate Disposal Site, Indian Head, Maryland* (CH2M HILL, 2003) (hereinafter referred to as remedial investigation (RI) report)

Final Site 47 Feasibility Study (FS), *Naval Support Facility Indian Head, Indian Head, Maryland* (CH2M HILL, 2008b) (hereinafter referred to as feasibility study (FS) report)

VBO \\NORTHEND\PROJ\USNAVFACENGCOM\359525INDIANHEAD\MAPFILES\314138_SITE47_ISCO_PILOT_STUDY_EVAL\FIGURE 1 - FACILITY MAP.MXD CELEFTHE 8/10/2011 1:16:56 PM

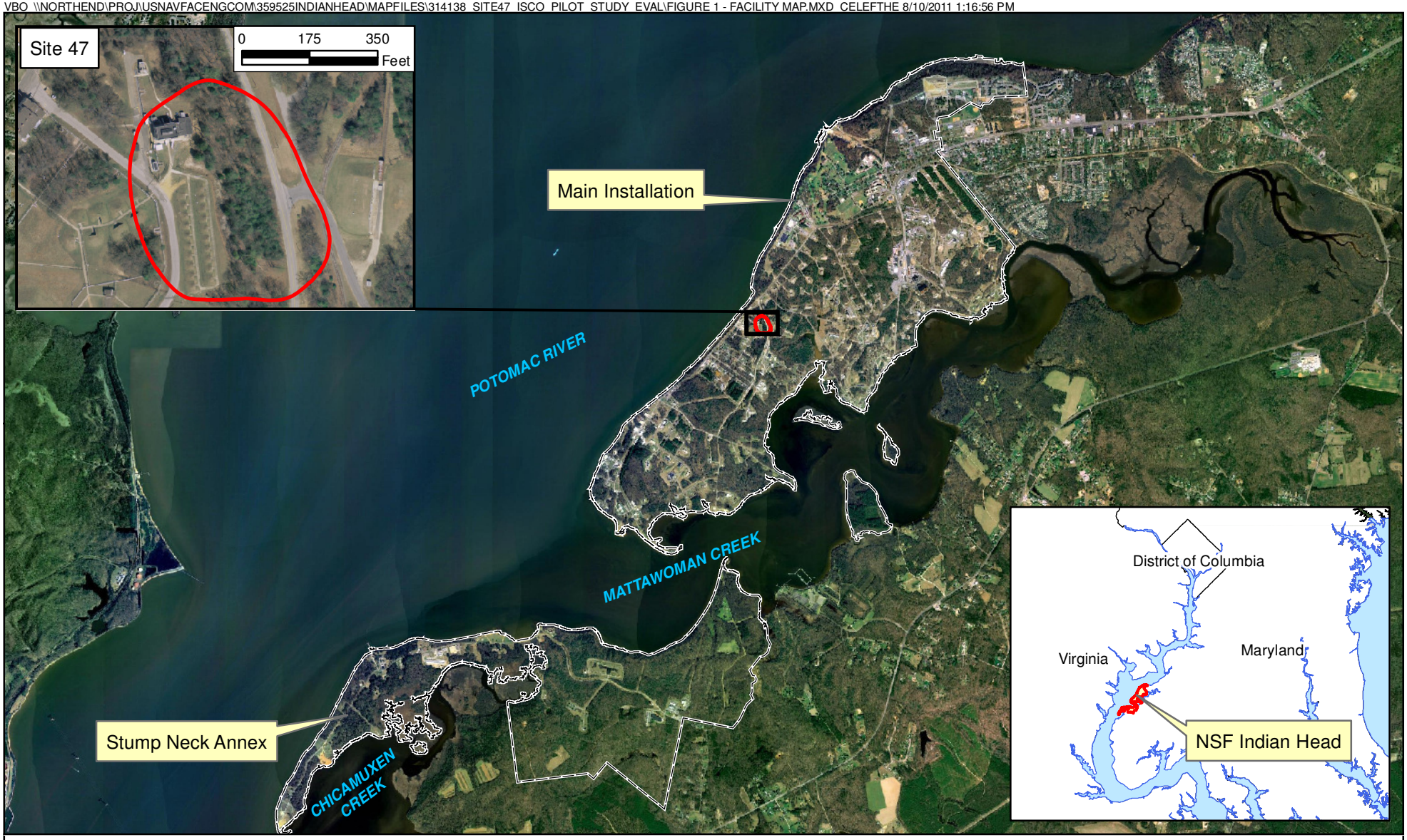

Legend

IR Site Boundary

Installation Boundary

N
W E
S

0 2,250 4,500
Feet

Figure 1-1
Facility Map
Site 47 ISCO Pilot Study Technology Performance Evaluation
NSF-IH, Indian Head, Maryland

Imagery Source:Google Earth Pro

CH2MHILL

V:\USNAVFACENGCOM\359525INDIANHEAD\MAPFILES\314138_SITE47_ISCO_PILOT_STUDY_EVAL\FIGURE 1-2 - PILOT STUDY TARGET AREA.MXD CELEFTHE 7/14/2011 4:34:36 PM

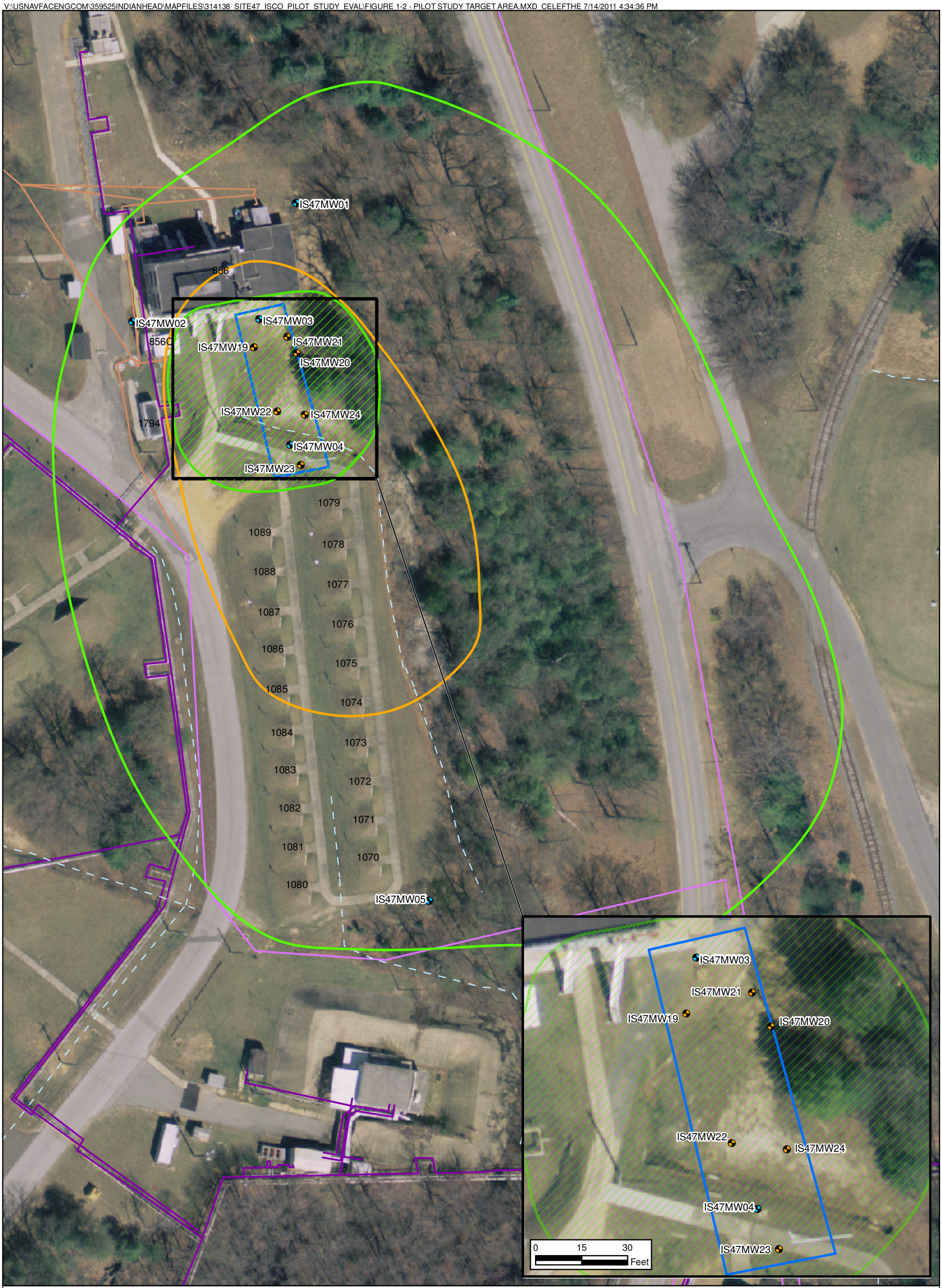

Legend

- Existing Monitoring Well Location
- Monitoring Wells Installed During Pilot Study
- Intermittent Swale
- Approximate Boundary of Area of Attainment
- Heating and Cooling Line
- Industrial Waste Line
- Waste Water Line
- Source Area (Carbon Terachloride >= 500 ppb)
- Pilot Study Area
- Inferred Residual DNAPL Area

N
W E
S

0 30 60
Feet

Figure 1-2
Pilot Study Target Area
Site 47 ISCO Pilot Study Technology
Performance Evaluation
NSF-IH, Indian Head, Maryland

CH2MHILL

SECTION 2

Background

NSF-IH is located in northwestern Charles County, Maryland, approximately 25 miles southwest of Washington, DC. NSF-IH is a Navy facility consisting of the Main Installation on the Cornwallis Neck Peninsula and the Stump Neck Annex on the Stump Neck peninsula. The Main Installation contains approximately 2,500 acres and is bounded by the Potomac River to the northwest, west, and south; Mattawoman Creek to the south and east; and the town of Indian Head to the northeast. Included as part of the Main Installation are Marsh Island and Thoroughfare Island, which are in Mattawoman Creek. Site 47, the Mercuric Nitrate Disposal Area, is located in the central portion of the Main Installation (Figure 1-1).

2.1 Site History and Characteristics

Mercuric nitrate was used in Building 856 as a catalyst in the production of the missile propellant hydrazinium nitroformate, and was reportedly disposed from 1957 through 1965 (Naval Energy and Environment Support Activity [NEESA], 1992). The disposal area encompassed about 24 ft^2 (4 feet by 6 feet) and was located on the west bank of the drainage ditch near the southeast corner of Building 856 (Figure 2-1). The disposal area was covered with limestone chips to provide neutralization for the spent catalyst (composed of nitric acid); evidence of the disposal area no longer exists. CT was used at the site, likely to keep explosives dry (as an inerting agent) and may have been poured into drains or stored in leaky drums (CH2M HILL, 2003).

Site 47 is currently used for industrial activities, including explosives research in laboratories within Building 856 and explosives storage in Buildings 1070 through 1089. Numerous surface and subsurface utilities are present onsite to support the research being conducted in Building 856. Several man-made topographic features and structures are present at the site. The primary features are magazines used for explosive storage and the mounds surrounding buildings and magazines for protection in the event of an explosion.

Based on the RI, soil at Site 47 consists of sand and silty sand from the ground surface to approximate depths of 7 to 24 feet bgs, depending on the surface elevation and location (CH2M HILL, 2008a). Grain size analysis of soil from this area collected during the bench-scale studies indicates that the soil is mostly sand with the following distribution: 80 percent sand, 13 percent silt, and 7 percent clay (CH2M HILL, 2007). During the RI, a localized silt layer was encountered in the vicinity of Building 856, with depths ranging between 8 feet bgs and 16 feet bgs. Underlying the sand and silty sand is a dense, gray clay that appears to be more than 30 feet thick. The depth to the clay at the site ranges between 1 foot bgs and 24 feet bgs. The clay surface generally slopes toward the southeast.

These are the two primary hydrostratigraphic units at the site: the silty sand acts as the primary water-bearing unit and the underlying clay acts as a confining layer. The primary direction of groundwater flow across the site is to the southeast, toward the Site 12 Pond and Mattawoman Creek. In areas north of Building 856, flow appears more easterly, likely

discharging directly to the Site 12 Pond. Groundwater elevations in the monitoring wells near Building 856 indicate that slight fluctuations may cause hydraulic gradients to reverse. This suggests that the monitoring wells installed near Building 856 are on or near a groundwater divide. In March 2003, as part of the RI, slug tests were performed in monitoring wells IS47MW01 through IS47MW10 to estimate the hydraulic conductivity of the silty sand. Hydraulic conductivities resulting from slug tests ranged from 0.6 foot per day (ft/day) to 19.7 ft/day, with an average of 3.1 ft/day. The linear groundwater velocity calculated in the FS was 10.7 feet per year. Vertical hydraulic conductivities from the clay layer ranged from 5.2×10^{-5} ft/day to 4.6×10^{-4} ft/day. These values reflect the low permeability of the clay, confirming that it is a confining layer.

2.2 Nature and Extent of Contamination

The nature and extent of shallow groundwater contamination are based on data obtained from both the RI and pre-FS investigation (CH2M HILL, 2004). The findings of the RI and pre-FS indicated that the shallow groundwater has elevated levels of volatile organic compounds (VOCs), semivolatile organic compounds (SVOCs), and metals. The COCs in the shallow groundwater that require remediation, as documented in the FS report, are CT, chloroform (CF), 1,1,2,2-trichloroethane (1,1,2,2-TCA), 1,2-dichloroethane (1,2-DCA), PCE, trichloroethene (TCE), cis-1,2-dichloroethene (cis-1,2-DCE), carbon disulfide, arsenic, iron, thallium, and vanadium.

High concentrations of VOCs were detected around Building 856, suggesting this is the source area. Based on the maximum historical concentrations of CT (100,000 micrograms per liter (µg/L) in IS47MW03) and PCE (2,700 µg/L in IS47MW04) detected in groundwater, they are assumed to be present as residual DNAPL in the immediate vicinity of Building 856. However, the lower concentration data from wells downgradient of Building 856 suggested that residual DNAPL is confined within the source area. A detailed description of the nature and extent of contamination in the shallow groundwater can be found in Section 6 of the RI report and Section 2 of the FS report.

VBO, \\NORTHEND\PROJ\USNAVFACENGCOM\359525\INDIANHEAD\MAPFILES\314138_SITE47_ISCO_PILOT_STUDY_EVAL\FIGURE 2-1 - SITE LOCATION AND FEATURES.MXD, BHATHAWA 10/18/2011 1:39:10 PM

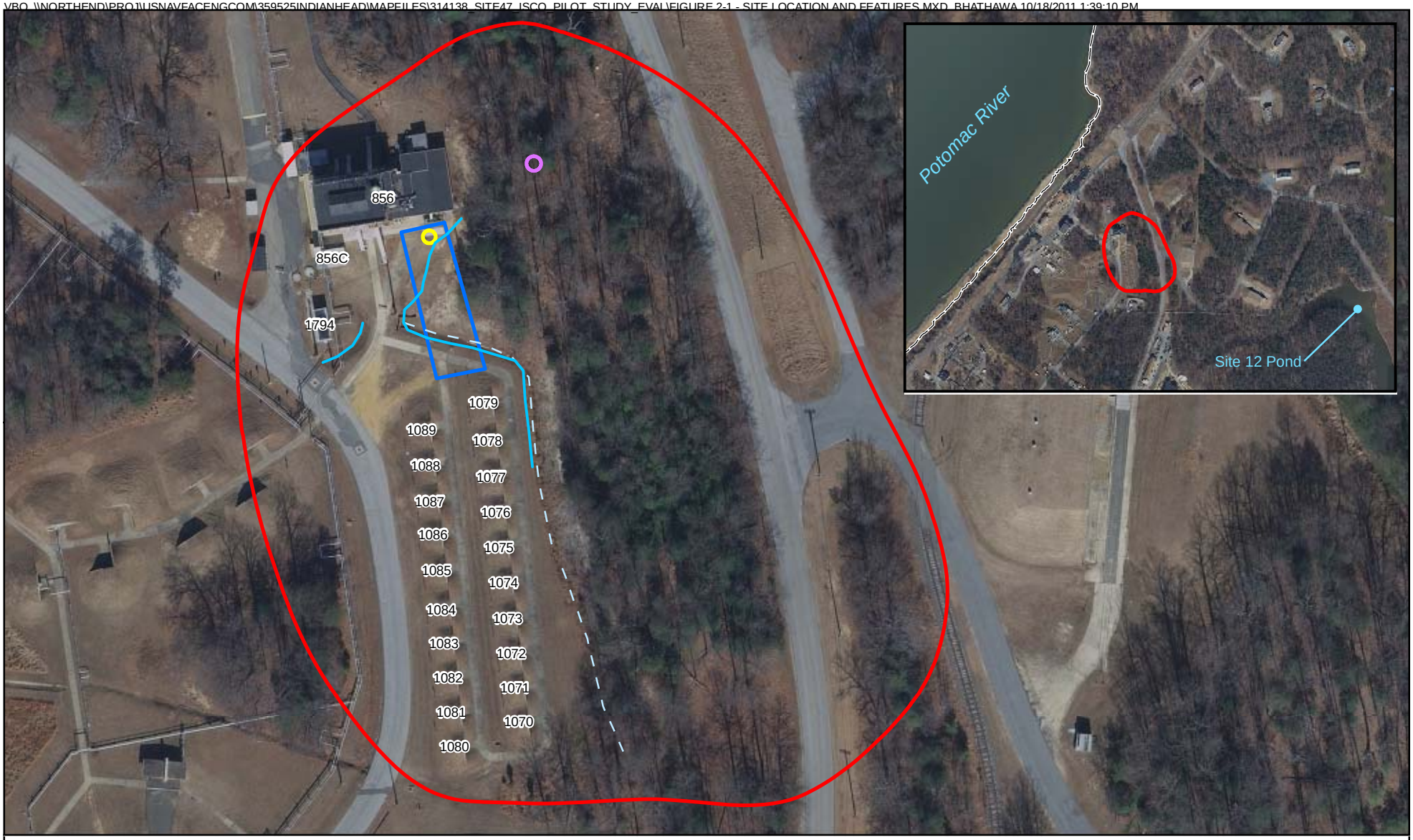

Legend

- Drainage Ditch
- Intermittent Swale
- Barium Disposal Pit
- Mercuric Nitrate Disposal Pit
- Pilot Study Area
- IR Site Boundary
- Installation Boundary

N
W E
S

0 50 100
Feet

Figure 2-1
Site Location Map
Site 47 ISCO Pilot Study Technology
Performance Evaluation
NSF-IH, Indian Head, Maryland

CH2MHILL

SECTION 3

Field Activities

The field program was implemented in accordance with the Work Plan, except as noted in Section 3.2, Deviations from the Work Plan. Appendix A presents photographs of various field activities performed during the pilot study.

3.1 Overview of Pilot Study Design

The pilot study design outlined in the Work Plan (CH2M HILL, 2008a) originally comprised of a combination of permanent injection wells and direct-push technology (DPT) injection points. Fourteen permanent injection wells (IS47IW01S/D through IS47IW07S/D) were proposed to be installed within the target area closer to Building 856, known as the Northern Cluster. Fifteen DPT temporary injection points (IS47IT01 through IS47IT15) were proposed to be placed within the southern part of the target area, known as the Southern Cluster. In addition, six permanent monitoring wells (IS47MW19 through IS47MW24) and eight passive soil venting points (IS47SV01 through IS47SV08) were proposed to be installed across the site.

As part of the original pilot study design, a total of approximately 70,400 pounds of sodium persulfate, activated with approximately 31,500 pounds of sodium hydroxide, was proposed to be delivered into the pilot study target area in two injection events. The first injection event proposed to deliver 46,200 pounds of the oxidant through the 14 permanent injection wells and 15 DPT temporary injection points. The number of permanent injection wells and DPT injection points through which the oxidant will be delivered during the second injection event was to be determined based on the results of the first injection event. It was assumed that the target COC mass during the second injection event would be one half of the COC mass targeted during the first injection event; therefore, it was anticipated the number of wells/points for injection would be less than the first injection event. Approximately 35,200 pounds of oxidant and 15,750 pounds of sodium hydroxide would be delivered during the second injection event.

However, due to issues encountered before initiating field activities (i.e., logistics and coordination between the mission and NSF-IH, approval of safety and work permits and schedule), the Site 47 pilot study could not be conducted as described in the Work Plan.

3.2 Deviations from the Work Plan

Table 3-1 provides a detailed description of the deviations to the Work Plan. The deviations occurred as a result of challenging logistics in obtaining a work permit for intrusive work at the site, ongoing mission-critical activities in Building 856, and the presence of extensive subsurface utilities. A key deviation was the use of permanent injection wells instead of a combination of DPT injection points and permanent wells for injection of solution into the subsurface; this eliminated the need for repeated intrusive activities into the subsurface. Furthermore, it was easier to obtain a work permit from NSF-IH for injecting solution into permanent wells than into DPT points because there would not be intrusive activities in

combination with injection activities as there would be with DPT points. Therefore, 28 nested injection wells were installed throughout the pilot study area instead of 14 wells and 15 DPT injection points originally planned.

Another key deviation from the Work Plan is that a second injection event was planned to be performed after evaluation of the results of the first injection event. Because of the logistical challenges in planning and coordinating the field activities for the first injection event, the IHIRT agreed that the second injection event would not be performed. Preliminary results of the first injection event were presented to the IHIRT at partnering meetings in April 2010, September 2010, and December 2010. The preliminary results indicated that alkaline-activated persulfate is a viable technology to treat the COCs in the shallow groundwater. As a result, the IHIRT agreed that the second injection was no longer necessary and the technology can be evaluated as a full-scale remedy.

3.3 Installation of Monitoring Wells, Injection Wells, and Passive Soil Vents

Installation of the monitoring wells, injection wells, and passive soil vents was conducted from March 2009 through June 2009 and included the following activities:

- Pre-injection site visit to fine tune the implementation of the field activities and the logistical requirements, as well as to stake out the proposed monitoring well, injection well, and soil vent locations.
- Global positioning system survey of the site boundaries, proposed well and vent locations, and existing DPT soil boring locations.
- Utility clearance in two mobilizations: one for the Northern Cluster and one for the Southern Cluster, in preparation for the well installation and saturated soil sampling. Air knifing was used in addition to the conventional utility location methods after a utility was struck.
- Installation and development of 6 pre-packed monitoring wells (IS47MW19 through IS47MW24) and 28 injection wells (IS47IW01S through IS47IW14S and IS47IW01D through IS47IW14D) using the DPT method and hollow stem auger method, respectively. Figure 3-1 shows the locations of the monitoring and injection wells, and Table 3-2 presents the actual screen intervals and locations and rationale for deviations from the proposed screen intervals and locations. Soil macrocore lithology logging was conducted at all locations; Appendix B presents the boring logs and well completion diagrams.
- Installation of eight passive soil vents (IS47SV01 through IS47SV08) (Figure 3-2 and Table 3-2).
- Survey of all monitoring wells, injection wells, and passive soil vents by a Maryland-licensed surveyor.

3.4 Baseline Soil and Groundwater Sampling

The baseline soil and groundwater sampling was conducted in two separate events in April and October 2009, respectively. The following activities were conducted:

- Collection of four discrete soil samples within the saturated interval from each of six soil boring locations (IS47SB20 through IS47SB25) via DPT methods. Samples were analyzed for VOCs. Soil boring locations were later converted into permanent monitoring wells (Figure 3-1).
- Collection of one composite saturated soil sample within the saturated interval at each of the six soil boring locations via DPT methods. Samples were analyzed for total organic carbon (TOC) and target analyte list (TAL) metals.
- Water level survey.
- Collection of groundwater samples from four existing monitoring wells (IS47MW01, IS47MW03, IS47MW04, and IS47MW05) and the six newly installed monitoring wells (IS47MW19 through IS47MW24). Samples were analyzed for VOCs, TAL metals (total and dissolved), natural attenuation parameters (sulfate, nitrate, nitrite, sulfide, chloride, alkalinity, ferrous iron, and methane, ethene, and ethane [MEE]).
- Measurement of water quality parameters (dissolved oxygen [DO], pH, temperature, specific conductance, oxidation-reduction potential [ORP], turbidity).
- Measurement of ferrous iron and DO concentrations using field test kits.
- Monitoring of ambient air concentrations in the breathing zone for VOCs with MultiRae photoionization detector .

3.5 *In Situ* Chemical Oxidation Injection with Activated Sodium Persulfate

The ISCO injection occurred in October and November 2009. The following activities were conducted:

- Pre-injection assessment to identify potential daylighting pathways
- Mobilization and set up of equipment for the injection
- Delivery of 46,692 pounds of sodium persulfate (91,622 gallons of solution) into the subsurface through 28 permanent injection wells (IS47IW01S/D through IS47IW14S/D). The actual persulfate mass injected (46,692 pounds) was slightly more than 100 percent of the designed oxidant mass (46,200 pounds) and the volume solution injected (91,622 gallons) was 90percent of the designed volume (102,004 gallons). Table 3-3 presents the actual mass and volume of solution injected.
  - Oxidant concentrations of sodium persulfate (as $Na_2S_2O_8$) injected were between 55 grams per liter (g/L) and 80 g/L. From October 28 to November 5, 2010, persulfate was injected at the targeted 55-g/L concentration. On November 6, 2010 the persulfate concentration was increased to 70 g/L, and from November 7 to

November 18, 2010, the persulfate concentration was increased again to 80 g/L, to account for a lower injection rate, relative to that anticipated in the design. Oxidant mass distribution is summarized in Table 3-3.

– A greater amount of oxidant mass was delivered into the deeper injection interval than the shallow injection interval because of field conditions experienced during the injection (i.e., daylighting, mounding, and injection rate). The shallow interval received 19,447 pounds of oxidant (41.6 percent), and the deeper interval received 27,245 pounds of oxidant (58.4 percent).

- Ambient air monitoring throughout the injection event to measure concentrations in the breathing zone and passive soil vents. The purpose was to verify that the exclusion zone was appropriately sized, and that the protection factor of the respirator was not being exceeded.
- Monitoring of groundwater mounding (water levels) and field parameters in monitoring wells (primarily IS47MW03, IS47MW04, and IS47MW19 through IS47MW24) throughout the injection event. Refer to Table 4-2 for details.
- Monitoring of low explosive levels (LEL) in eight passive soil vents (IS47SV01 through IS47SV08). Readings collected throughout the injection indicated 0 percent LEL.
- Utility clearance via air-knifing techniques at eight soil boring locations (IS47ECBG1, IS47ECBG2, IS47EC1 through IS47EC6) in preparation for electrical conductivity (EC) profiling (Figure 3-1) shows the locations of the EC profiling locations.
- Measurement of the EC at eight locations via DPT methods to assess the vertical and lateral distribution of the oxidant. The eight locations consisted of two background locations (IS47ECBG01 and IS47ECBG02), a three-point cluster (IS47EC04, IS47EC05, and IS47EC06) located cross-gradient west of the injection well pair IS47IW01S/D, and a three-point cluster (IS47EC01, IS47EC02, and IS47EC03) located cross-gradient east of injection well pair IS47IW13S/D. The background data were collected to assess the EC of the subsurface not affected by the oxidant injection. Data from the EC cluster to the west of IS47IW01S/D were collected to assess the radius of influence and distribution of the oxidant at 6, 10, and 14 feet from the injection. Data from the EC cluster to the east of IS47IW13S/D were collected to assess the radius of influence and distribution of the oxidant at 8, 12, and 16 feet from the injection.
- Site restoration activities comprising replacing and adding a silt fence, and adding grass seed and straw to disturbed areas.
- Global positioning system survey of the EC profiling points.

3.6 Two-Month Post-Injection Groundwater Sampling

The 2-month post-injection sampling was conducted in February 2010 and consisted of the following activities:

- Water level survey

- Groundwater sampling from 10 monitoring wells (IS47MW01, IS47MW03 through IS47MW05, and IS47MW19 through IS47MW24). Samples were analyzed for VOCs, TAL metals (total and dissolved), selected inorganic parameters (sulfate, nitrate, nitrite, sulfide, chloride). VOC samples from wells IS47MW03, IS47MW19, and IS47MW20 were not collected because the persulfate concentration was greater than 7 milligrams per liter (mg/L) and the pH was 10 or greater (indicating that groundwater at these locations was still being influenced by active oxidation).
- Measurement of water quality parameters (depth to water, DO, pH, temperature, specific conductance, ORP, turbidity).
- Measurement of ferrous iron, DO, persulfate, and pH concentrations using field test kits.
- Purging of three monitoring wells (IS47MW02, IS47MW06, and IS47MW10) and collection of water quality parameter and field test kit data as described above.
- Monitoring of ambient air concentrations in the breathing zone for VOCs.
- Re-survey of the EC profiling points from November 2009. The previous survey data were unable to be retrieved due to instrumentation issues.

3.7 Six-Month Post-Injection Soil and Groundwater Sampling

The 6-month post-injection sampling was conducted in July 2010 and consisted of the following activities:

- Staking out six proposed saturated soil sample locations and the six EC profiling locations.
- Clearing buried utilities using air-knifing techniques at 12 soil boring locations (IS47SB20A through IS47SB25A and IS47EC07 through IS47EC12) in preparation for the saturated soil sampling and EC profiling.
- Water level survey
- Sampling of groundwater from 10 monitoring wells (IS47MW01, IS47MW03 through IS47MW05, IS47MW19 through IS47MW24). Samples were analyzed for VOCs, TAL metals (total and dissolved), natural attenuation parameters (sulfate, nitrate, nitrite, sulfide, chloride, alkalinity, ferrous iron, and MEE).
- Measurement of water quality parameters (depth to water, DO, pH, temperature, specific conductance, ORP, turbidity).
- Measurement of ferrous iron, DO, persulfate, and pH concentrations using field test kits.
- Purging of three monitoring wells (IS47MW02, IS47MW06, and IS47MW10) and collecting water quality parameter and field test kit data as described above.
- Monitoring ambient air concentrations in the breathing zone for VOCs.
- Collection of four discrete soil samples within the saturated interval from each of six soil boring locations (IS47SB20A through IS47SB25A) via DPT methods. Samples were

analyzed for VOCs. Soil boring locations collected approximately 2 feet from the previous saturated soil sampling locations (IS47SB20 through IS47SB25) (Figure 3-1).

- Collection of one composite saturated soil sample within the saturated interval at each of the six soil boring locations via DPT methods. Samples were analyzed for TOC and TAL metals.
- EC profiling at six locations (IS47EC07 through IS47EC12) to assess the remaining lateral and vertical distribution of the sodium persulfate. Each location was offset approximately 2 feet from the previous EC locations (IS47EC01 through IS47EC06) (Figure 3-1).
- Removed erosion and sediment control measures from the site.

3.8 Investigation-derived Waste Management

Investigation-derived waste (IDW) generated during field activities was characterized, managed, and disposed in accordance with the Work Plan and as follows:

- Collection of solid and liquid IDW samples of soil cuttings and development water, respectively, generated during the well installation and baseline soil sampling event in May 2009; analyzed for full Toxicity Characteristic and Leaching Procedure (TCLP) and reactivity, corrosivity, and ignitability (RCI). Based on the analytical results of the samples, soil and liquid IDW were disposed offsite as non-hazardous and hazardous waste, respectively. IDW was disposed offsite in June 2009.
- Collection of liquid IDW sample of purge water generated during the baseline groundwater sampling event in October 2009; analyzed for full TCLP and RCI. Based on the analytical results of the samples, the liquid IDW was disposed offsite as hazardous waste.
- Collection of liquid IDW sample of purge water generated during the injection event in November 2009; analyzed for full TCLP and RCI. Injection waste was not sampled because pH is known and high enough for waste to be considered hazardous. Based on the analytical results of the samples, the liquid IDW was disposed offsite as hazardous waste.
- Liquid IDW generated during the 2-month post-injection sampling event was not characterized. Based on the IDW results from November 2009, all waste was assumed to be hazardous; IDW from the baseline groundwater sampling event, injection event, and 2-month post-injection sampling event was taken offsite in February 2010.
- Collection of solid and liquid IDW samples of soil cuttings and purge water, respectively, generated during the 6-month post-injection sampling event in July 2010; analyzed for full TCLP and RCI. Based on the analytical results of the samples, soil and liquid IDW were disposed offsite as non-hazardous and hazardous, respectively. IDW was disposed offsite in October 2010.

3.9 Subcontractors

The following subcontractors provided services in support of the pilot study:

- Patton Harris Rust and Associates of Chantilly, VA. – State of Maryland-licensed surveyor who surveyed the monitoring wells, injection wells, and passive soil vents.
- Earth Recourses Technology, Inc of Annapolis, MD – Performed utility clearing for the installation of monitoring wells, injection wells, and passive soil vents.
- Accumark Inc. of Ashland, VA – Performed air knifing and utility clearance for the installation of monitoring wells, injection wells, and passive soil vents; and the EC profiling activities.
- Vironex of Bowie, MD – Performed the EC profiling.
- Katahdin Analytical Services, Inc. of Scarborough, ME – Provided analytical services for soil, groundwater, and IDW.
- Expert Design and Diagnostics, LLC of Stratham, NH – Provided design support and performed the injection.
- Parratt Wolff, Inc. of Hillsborough, NC – Performed drilling for the installation of monitoring wells, injection wells, and passive soil vents.
- Rain for Rent of Baltimore, MD – Provided secondary containment during the injection activities.
- Potomac Environmental, Inc. of Stafford, VA, and Capitol Environmental Services, Inc of Wilmington, DE – Removed the IDW generated during the field activities.

TABLE 3-1
Field Activity Deviations from the Work Plan
Site 47 ISCO Pilot Study Technology Performance Evaluation
NSF-IH, Indian Head, Maryland

Field Activity	Deviations from Design	Rationale
Installation of Monitoring Wells, Injection Wells, and Passive Soil Vents	● Utility clearance was conducted in two events, one for the northern cluster and one for the southern cluster ● Multiple monitoring wells, injection wells , and soil vents were relocated. ● Screen intervals for four monitoring wells and 12 injection wells were modified ● Overdilling of existing DPT borings was not conducted ● Passive soil vents were modified	● Because of ongoing renovations in Building 856, access to the northern cluster was limited in the early stages of the pilot study implementation. The southern cluster was cleared for utilities a week prior to the northern cluster. ● Well and venting locations were relocated due to surface and subsurface features, overhead utility lines, base requirements regarding drilling near magazines, and/or construction activities at Building 856. The northern cluster was heavily impacted by surface and subsurface features. Relocated wells maintained the integrity of the design and pilot study objectives. ● Screen intervals were modified based on soil boring lithology observations made in the field. ● DPT borings were advanced during the bench-scale study for the collection of saturated soil samples. Because these DPT borings were abandoned using sand, it was thought that over-drilling was necessary to minimize the preferential pathway of oxidant during injection. However, during the injection, the borings could not be located, and thus were not over-drilled. ● The groundwater in the vicinity of the passive soil vents was observed at 2 feet bgs. In order to keep the screen above the water table, the designw as modified. The revised screen interval was 1-2 feet bgs. Refer to Table 3-2 for additional details.
Baseline Soil and Groundwater Sampling	● Baseline sampling event was broken up into 2 events, one for soil and one for groundwater. <u>Baseline Soil Sampling:</u> ● Soil sample locations were revised. ● The discrete soil sampling intervals for VOC analysis were modified from the four proposed intervals of 6-9 feet bgs, 9-12 feet bgs, 12-15 feet bgs, and 15-18 feet bgs. ● The composite soil sampling interval for TAL metals and TOC analysis was modified from the proposed interval of 6-18 feet bgs.	● Due to permit, base, and building schedule restrictions, the baseline groundwater sampling could not be conducted in the same mobilization as the baseline soil sampling (performed with the drilling activities in April through June 2009). Baseline groundwater sampling was condcucted prior to injection activities in October 2009. <u>Baseline Soil Sampling</u> ● The boring locations of the saturated soil samples coincide with and were converted to the six additional monitoring wells (IS47MW19 through IS47MW24) discussed above; therefore, the locations of the six proposed saturated soil samples were relocated in the field in the same manner as the newly installed monitoring wells. ● The discrete sampling intervals were modified at IS47SB20, IS47SB21, and IS47SB22 because of airknifing down to 7 feet bgs. The 6-9 feet bgs discrete interval was modified to 8-9 feet bgs at these three locations. In addition, the 15-18 feet bgs discrete interval was modified at IS47SB20, IS47SB23, IS47SB24, and IS47SB25 because of lithologic observations. IS47SB20 and IS47SB23 were sampled at 15-17 feet bgs, and IS47SB24 and IS47SB25 were sampled at 15-16 feet bgs. ● Because of airknifing and/or soil lithology observations, the compostire soil sampling interval was modified at IS47SB20, IS47SB23, IS47SB24, and IS47SB25. IS47SB20 was sampled at 8-17 feet bgs, IS47SB23 at 6-17 feet bgs, and IS47SB24 and IS47SB25 at 6-16 feet bgs. Refer to Table 3-2 for additional details

TABLE 3-1
Field Activity Deviations from the Work Plan
Site 47 ISCO Pilot Study Technology Performance Evaluation
NSF-IH, Indian Head, Maryland

Field Activity	Deviations from Design	Rationale
In situ C hemical Oxidation Injection with Activated Sodium Persulfate	● The combination delivery method of 14 permanent injection wells (IS47IW01S/D through IS47IW07S/D) in the 'Northern Cluster' and 15 DPT injection points (IS47IT01 through IS47IT15) in the 'Southern Cluster' was modified. ● Sodium persulfate was brought onsite as a 400g/L pre-batched solution in a tanker truck rather than in the dry powder form to be mixed onsite. ● The oxidant loading concentration varied throughout the injection ● The volume distribution for each injection location was modified ● Locations of EC profiling points were relocated.	● Due to issues encountered before initiating field activities (i.e., logistics and coordination between the Mission and NSF-IH, approval of safety and work permits, schedule, etc.), the Site 47 pilot study could not be conducted as planned. In response, all DPT injection points in the Southern Cluster (IS47IT01 through IS47IT15) were replaced with fourteen permanent injection wells (IS47IW08S/D through IS47IW14S/D) similar to those in the Northern Cluster. ● Due to NSWC concerns regarding the water requirements, and the storage, handling, and use of chemicals onsite, the sodium persulfate delivery and handling procedure was modified. ● Complications experienced in the field prevented the team from achieving the target concentration of sodium persulfate (i.e., 55 g/L) throughout the entire duration of the injection. A decision to increase the concentration of sodium persulfate at the injection well head was made because of a reduced water supply flow rate, reduced ability for wells to accept the design flow rate of 5 gpm, and subsurface oversaturation. However, the bench-scale studies indicated that the viable range of sodium persulfate concentrations was 50 to 200 g/L, including a 25 percent safety factor. The oxidant concentrations achieved in the field were sufficient to meet the subsurface oxidant demands and overall pilot study design. Refer to Table 3-3 for additional details. ● Based on the delivery method modification, each injection location was to receive approximately 1,650 lbs of sodium persulfate and 750 lbs of sodium hydroxide, in a total of 3,643 gallons of activated persulfate solution; modified from each location in the 'Northern Plume" to receive1,650 lbs of oxidant dissolved in 3,643 gallons of water, and each location in the "Southern Cluster" to receive 1,540 lbs of oxidant dissolved in up to 3,400 gallons of water. However, due to daylighting and subsequent reduction in injection flow rates, the volume distribution was further modified. Refer to Table 3-4 for additional details. ● Due to the modification in the delivery method, the anticipated ROI within the former 'Southern Cluster' will be the same as that in the' Northern Cluster'. Furthermore, the locations had to be relocated due to the dense configuration of the injection wells and surface features and subsurface utilities.The actual EC locations are cross gradient of the pilot study area outside of the injection well network.
2-month Post Injection Groundwater Sampling	● Groundwater samples were not collected and analyzed according to the Work Plan (for the same parameters as the baseline monitoring event, with the exception of natural attenuation parameters). ● Additional monitoring wells were purged and water quality paramters collected.	● It was determined that the presence of high concentrations of persulfate (> 7 mg/L) and/or high pH (> 10) could potentially degrade the VOC concentrations in samples before they could be analyzed. As a result, VOC samples at wells IS47MW01 and IS47MW05 were analyzed as described in the Work Plan because persulfate concentration was less than 7 mg/L and the pH was less than 10; VOC samples at wells IS47MW04 and IS47MW21 through IS47MW24 were collected and held for analysis because the persulfate concentration was greater than 7 mg/L and the pH was less than 10; VOC samples at wells IS47MW03, IS47MW19, and IS47MW20 were not collected because the persulfate concentration was greater than 7 mg/L and the pH was 10 or greater. All other samples were collected and analyzed as stated in the Work Plan. ● Water quality parameters were collected at three additional monitoring wells (IS47MW02, IS47MW06, and IS47MW10) to obtain additional data for use in the evaluation of natural attenuation.
6-month Post Injection Soil and Groundwater Sampling	● The discrete soil sampling intervals for VOC analysis were modified from the four proposed intervals of 6-9 feet bgs, 9-12 feet bgs, 12-15 feet bgs, and 15-18 feet bgs. ● Groundwater samples were not collected according to the Work Plan ● Additional monitoring wells were purged and water quality paramters collected. ● EC profiling was conducted via DPT methods	● The discrete sampling intervals were modified at IS47SB21A, IS47SB22A, IS47SB23A, and IS47SB24A because of airknifing down utility clearance. The 6-9 feet bgs discrete interval was modified to 7-10 feet bgs at IS47SB21A and IS47SB22A, and 5-8 feet bgs at IS47SB23A and IS47SB24A. Subsequently the 9-12, 12-15, and 15-18 feet bgs intervals were also modified to obtain 4 discrete 3 foot intervals at each location. The 9-12 feet bgs discrete interval was modified to 10-13 feet bgs at IS47SB21A and IS47SB22A, and 8-11 feet bgs at IS47SB23A and IS47SB24A. The 12-15 feet bgs discrete interval was modified to 13-16 feet bgs at IS47SB21A and IS47SB22A, and 11-14 feet bgs at IS47SB23A and IS47SB24A. The 15-18 feet bgs discrete interval was modified to 16-19 feet bgs at IS47SB21A and IS47SB22A, and 14-17 feet bgs at IS47SB23A and IS47SB24A. ● Groundwater samples were collected and analyzed as stated in the Work Plan; however the VOCs in groundwater samples from IS47MW19 and IS47MW24 were collected unpreserved, as opposed to preserved with HCl, becaue the persulfate concentration was greater than 7 mg/L and/or if the pH was greater than 10. In addition, the lab did not analyze these samples within 24 hours as intended. As a result, the VOC data from these two wells are J-qualified. ● Water quality parameters were collected at three additional monitoring wells (IS47MW02, IS47MW06, and IS47MW10) to obtain additional data for use in the evaluation of natural attenuation. ● EC profiling was conducted at six locations (IS47EC07 through IS47EC12) to assess the vertical and lateral distribution of the oxidant. Each location was offset approximatley 2 feet from the previous EC locations.

TABLE 3-2
Screen Interval for Monitoring Wells, Injection Wells, and Passive Soil Vents
Site 47 ISCO Pilot Study Technology Performance Evaluation
NSF-IH, Indian Head, Maryland

ID	Date Installed	Proposed Screen Interval (feet bgs)	Actual Screen Interval (feet bgs)	Notes
Monitoring Wells				
IS47MW19	4/29/2010	8 - 18	7 - 17	Air-knife used for utility clearance; relocated approximately 3 feet west; screen interval was modified based on subsurface lithology observations
IS47MW20	4/29/2010	8 - 18	7.5 - 17.5	Air-knife used for utility clearance; relocaed approximately 3 feet east; screen interval was modified based on subsurface lithology observations
IS47MW21	4/29/2010	8 - 18	8 - 18	Air-knife used for utility clearance; relocated approximately 20 feet east
IS47MW22	4/16/2009	6 - 16	5.5 - 15.5	Screen interval was modified based on subsurface lithology observations
IS47MW23	4/16/2009	6 - 16	4.5 - 14.5	Relocated to comply with base requirement that no drilling take place in the direct vicinity of the magazines; screen interval was modified based on subsurface lithology observations
IS47MW24	4/16/2009	6 - 16	6 - 16	Relocated approximately 5 feet east
Injection Wells				
IS47IW01S	5/1/2009	7 - 12	7 - 12	Air-knife used for utility clearance; relocated approximately 20 feet southwest
IS47IW01D	5/1/2009	13 - 18	14 - 19	Air-knife used for utility clearance; relocated approximately 20 feet southwets; screen interval was modified based on subsurface lithology observations
IS47IW02S	4/30/2009	7 - 12	7 - 12	Air-knife used for utility clearance; relocated approximately 5 feet west
IS47IW02D	4/29/2009	13 - 18	13 - 18	Air-knife used for utility clearance; relocated approximately 10 feet south
IS47IW03S	5/1/2009	7 - 12	7 - 12	Air-knife used for utility clearance; relocated approximately 3 feet northwest
IS47IW03D	4/30/2009	13 - 18	12.5 - 17.5	Air-knife used for utility clearance; relocated approximately 3 feet north; screen interval was modified based on subsurface lithology observations
IS47IW04S	5/1/2009	7 - 12	7 - 12	Air-knife used for utility clearance; relocated approximately 10 feet south
IS47IW04D	5/1/2009	13 - 18	12.5 - 17.5	Air-knife used for utility clearance; relocated approximately 10 feet south; screen interval was modified based on subsurface lithology observations
IS47IW05S	4/29/2009	7 - 12	7 - 12	Air-knife used for utility clearance; relocated approxiamtle 5 feet north
IS47IW05D	4/29/2009	13 - 18	13 - 18	Air-knife used for utility clearance; relocated approximately 5 feet east
IS47IW06S	4/22/2009	7 - 12	7 - 12	Relocated approximately 2 feet south
IS47IW06D	4/30/2009	13 - 18	11.5 - 16.5	Air-knife used for utility clearance; relocated approximately 2 feet east; screen interval was modified based on subsurface lithology observations
IS47IW07S	4/22/2009	7 - 12	7 - 12	Relocated approximately 10 feet east
IS47IW07D	4/30/2009	13 - 18	11 - 16	Air-knife used for utility clearance; relocated approximately 2o feet east; screen interval was modified based on subsurface lithology observations
IS47IW08S	4/20/2009	7 - 12	7 - 12	Relocated 5 feet south due to overhead utility line
IS47IW08D	4/20/2009	13 - 18	10.5 - 15.5	Relocated 15 feet southeast due to overhead utility line; screen interval was modified based on subsurface lithology observations
IS47IW09S	4/17/2009	7 - 12	7 - 12	Relocated approximately 5 feet south
IS47IW09D	4/21/2009	13 - 18	10.5 - 15.5	Relocated approximately 2 feet west; screen interval was modified based on subsurface lithology observations
IS47IW10S	4/21/2009	7 - 12	7 - 12	Relocated 15 feet southwest due to overhead utility line
IS47IW10D	4/21/2009	13 - 18	11 - 16	Relocated 15 feet southwest due to overhead utility line; screen interval was modified based on subsurface lithology observations
IS47IW11S	4/15/2009	7 - 12	7 - 12	Relocated approximatley 10 feet southeast
IS47IW11D	4/14/2009	13 - 18	10 - 15	Relocated 6 feet south due to surface features; screen interval modified due to presence of dry, moderately plastic silt aquitard encountered at 15 ft bgs
IS47IW12S	4/14/2009	7 - 12	7 - 12	Relocated approximatley 5 feet south
IS47IW12D	4/17/2009	13 - 18	11 - 16	Relocated 3 feet north due to surface features;screen interval was modified based on subsurface lithology observations
IS47IW13S	4/15/2009	7 - 12	7 - 12	Relocated approximatley 10 feet south
IS47IW13D	4/16/2009	13 - 18	11.5 - 16.5	Relocated approximatley 5 feet south; screen interval was modified based on subsurface lithology observations
IS47IW14S	4/14/2009	7 - 12	7 - 12	Relocated 2 feet north due to surface features
IS47IW14D	4/15/2009	13 - 18	10 - 15	Relocated to comply with base requirement that no drilling take place in the direct vicinity of the magazines; screen interval modified due to presence of dry, moderately plastic silt aquitard encountered at 15 ft bgs
Passive Soil Vents				
IS47SV01	6/12/2009	2 - 7	1 - 2	Installation postponed until Building 856 construction was completed; screen interval was modified based on groundwater level
IS47SV02	4/30/2009	2 - 7	1 - 2	Relocated approximately 7 feet south; screen interval was modified based on groundwater level
IS47SV03	4/22/2009	2 - 7	1 - 2	Relocated approximately 10 feet east; screen interval was modified based on groundwater level
IS47SV04	4/22/2009	2 - 7	1 - 2	Relocated approximately 10 feet south; screen interval was modified based on groundwater level
IS47SV05	4/22/2009	2 - 7	1 - 2	Relocated approximately 10 feet south; screen interval was modified based on groundwater level
IS47SV06	4/22/2009	2 - 7	1 - 2	Screen interval was modified based on groundwater level
IS47SV07	4/22/2009	2 - 7	1 - 2	Relocated approximately 2 feet east; screen interval was modified based on groundwater level
IS47SV08	4/22/2009	2 - 7	1 - 2	Screen interval was modified based on groundwater level

Notes:

1. Air-knifing techniques were used for 15 soil boring locations installed after utility strike on 4/23/2009

bgs - below ground surface

TABLE 3-3
Oxidant Mass Distribution
Site 47 ISCO Pilot Study Technology Performance Evaluation
NSF-IH, Indian Head, Maryland

Well ID	Mass of Sodium Persulfate Injected (lbs)	Volume of Activated Sodium Persulfate Solution Injected (gal)	Design Ratio (Actual Mass/Design Mass[1])	Design Achieved[2]?	Rationale
Injection Wells					
IS47IW01S	1,770	2,904	1.07	YES	Achieved target volume; received extra volume redistributed from poor performing injection wells, to achieve design.
IS47IW01D	1,850	4,152	1.12	YES	Achieved target volume; received extra volume redistributed from poor performing injection wells, to achieve design.
IS47IW02S	1,676	3,167	1.02	YES	Achieved target volume
IS47IW02D	2,010	4,405	1.22	YES	Achieved target volume; received extra volume redistributed from poor performing injection wells, to achieve design.
IS47IW03S	1,810	3,597	1.10	YES	Daylighting occurred around the bentonite seal within the well heads at injection welll; achieved target volume; received extra volume redistributed from poor performing injection wells, to achieve design.
IS47IW03D	1,996	3,852	1.21	YES	Achieved target volume; received extra volume redistributed from poor performing injection wells, to achieve design.
IS47IW04S	1,338	2,379	0.81	NO	Minimal to moderate daylighting around well seal; repaired well seal and implemented lower injection flow rates.
IS47IW04D	2,080	4,351	1.26	YES	Achieved target volume; received extra volume redistributed from poor performing injection wells, to achieve design.
IS47IW05S	1,670	3,067	1.01	YES	Achieved target volume
IS47IW05D	2,080	4,527	1.26	YES	Achieved target volume; received extra volume redistributed from poor performing injection wells, to achieve design.
IS47IW06S	1,790	3,681	1.08	YES	Achieved target volume; received extra volume redistributed from poor performing injection wells, to achieve design.
IS47IW06D	2,078	3,384	1.26	YES	Achieved target volume; received extra volume redistributed from poor performing injection wells, to achieve design.
IS47IW07S	1,850	3,188	1.12	YES	Daylighting occurred around the bentonite seal within the well heads at injection welll; achieved target volume; received extra volume redistributed from poor performing injection wells, to achieve design.
IS47IW07D	2,015	3,850	1.22	YES	Achieved target volume; received extra volume redistributed from poor performing injection wells, to achieve design.
IS47IW08S	108	298	0.07	NO	Immediate daylight around well seal when injecting at this location; repaired well seal without success.
IS47IW08D	1,260	2,200	0.76	NO	Repaired well seal and implemented lower injection flow rates; interconnectivity between 08S and 08D required even lower injection flow rates to prevent daylighting in IS4708S.
IS47IW09S	1,858	3,080	1.13	YES	Achieved target volume; received extra volume redistributed from poor performing injection wells, to achieve design.
IS47IW09D	2,690	5,512	1.63	YES	Achieved target volume; received extra volume redistributed from poor performing injection wells, to achieve design.
IS47IW10S	189	449	0.11	NO	Immediate daylight around well seal when injecting at this location; repaired well seal without success.
IS47IW10D	2,007	4,436	1.22	YES	Achieved target volume; received extra volume redistributed from poor performing injection wells, to achieve design.
IS47IW11S	2,119	3,760	1.28	YES	Achieved target volume; received extra volume redistributed from poor performing injection wells, to achieve design.
IS47IW11D	1,979	4,485	1.20	YES	Achieved target volume; received extra volume redistributed from poor performing injection wells, to achieve design.
IS47IW12S	1,550	2,531	0.94	NO	Proximity of injection well to the ditch required lower injection flow rates
IS47IW12D	1,630	2,706	0.99	NO	Proximity of injection well to the ditch required lower injection flow rates
IS47IW13S	1,660	3,843	1.01	YES	Achieved target volume
IS47IW13D	1,670	3,550	1.01	YES	Achieved target volume
IS47IW14S	59	140	0.04	NO	Immediate daylight to the nearby ditch
IS47IW14D	1,900	4,128	1.15	YES	Daylighting occurred around the bentonite seal within the well heads at injection welll; achieved target volume; received extra volume redistributed from poor performing injection wells, to achieve design.
Total	46,692	91,622			

Notes:

[1] Designed sodium persulfate mass per well = 1,650 lbs; design volume per well = 3,643 gallons

[2] "Design Achieved" for each injection well is based on the ratio of the actual mass to the design mass of sodium persulfate. The designed total mass of sodium persulfate to be injected = 46,200 lbs; actual total mass of sodium persulfate procured = 46,284 lbs (based on 840 55.1 lb bags from FMC Industrial Chemicals); percent complete by mass = 100%

Injection flow rates were reduced when daylighting occurred to achieve design to the extent possible

19,447 pounds of oxidant (41.6%) was injected into the shallow interval and 27,245 pounds of oxidant (58.4%) was injected into the deep interval

\\NORTHEND\PROJ\USNAVFACENGCOM\359525INDIANHEAD\MAPFILES\314138_SITE47_ISCO_PILOT_STUDY_EVAL\FIGURE 3-1 - MONITORING AND INJECTION WELL LOCATIONS.MXD MRISSING 2/22/2011 12:20:17

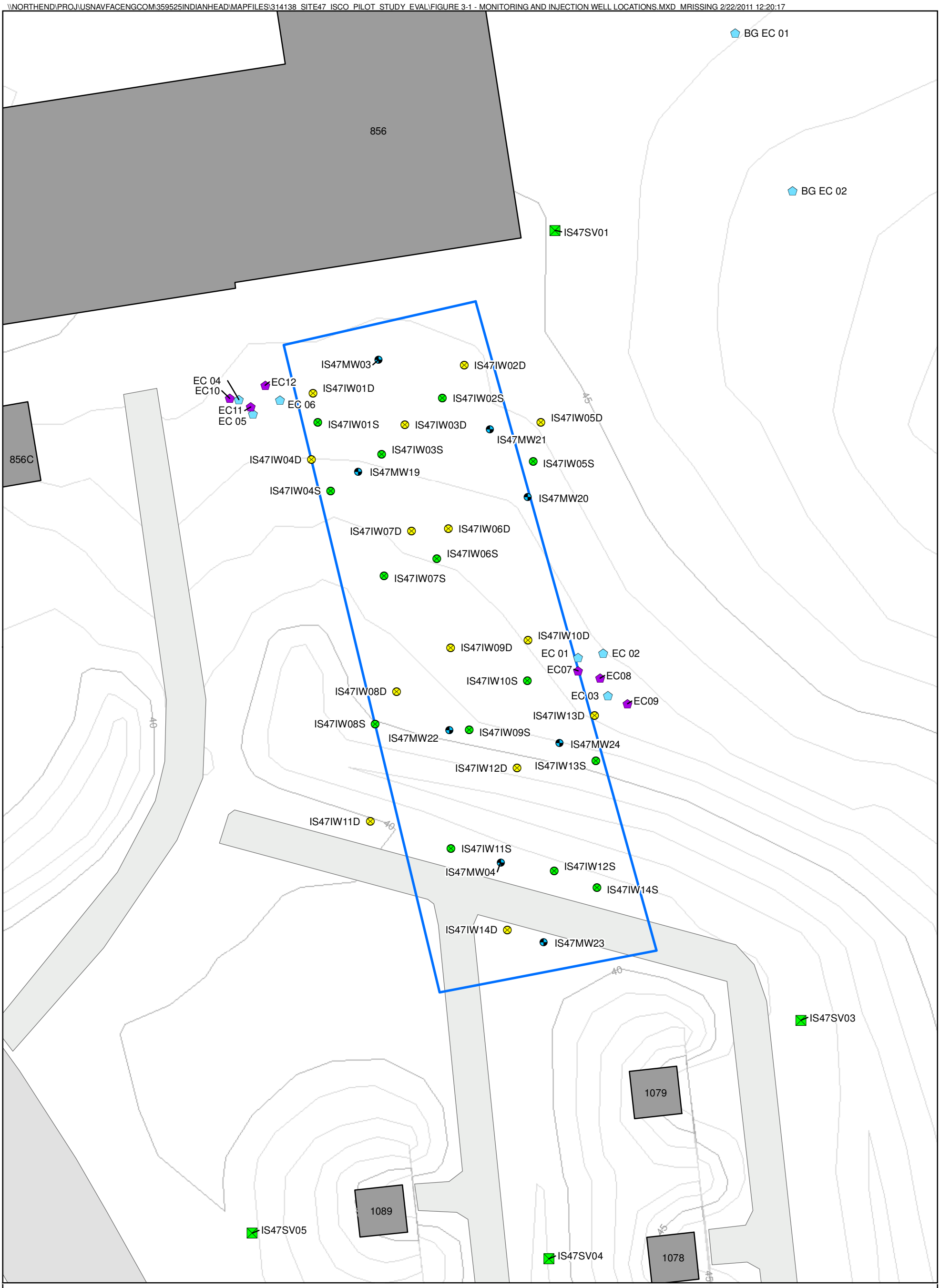

Legend

- EC Profiling Location (July 2010)
- EC Probe Location (November 2009)
- Passive Soil Gas Venting Locations
- Existing Monitoring Well Location
- Existing Shallow Permanent Injection Well (6-12' bgs)
- Existing Deep Permanent Injection Well (12-18' bgs)
- Elevation Contour Line (1 ft Interval)
- Elevation Contour Line (5 ft Interval)
- Pilot Study Area
- Road
- Building

N W E S

0 15 Feet

Figure 3-1
Monitoring and Injection Well Locations
Site 47 ISCO Pilot Study Technology
Performance Evaluation
NSF-IH, Indian Head, Maryland

CH2MHILL

\\NORTHEND\PROJ\USNAVFACENGCOM\359525INDIANHEAD\MAPFILES\314138_SITE47_ISCO_PILOT_STUDY_EVAL\FIGURE 3-1 - MONITORING AND INJECTION WELL LOCATIONS.MXD MRISSING 2/22/2011 12:20:17

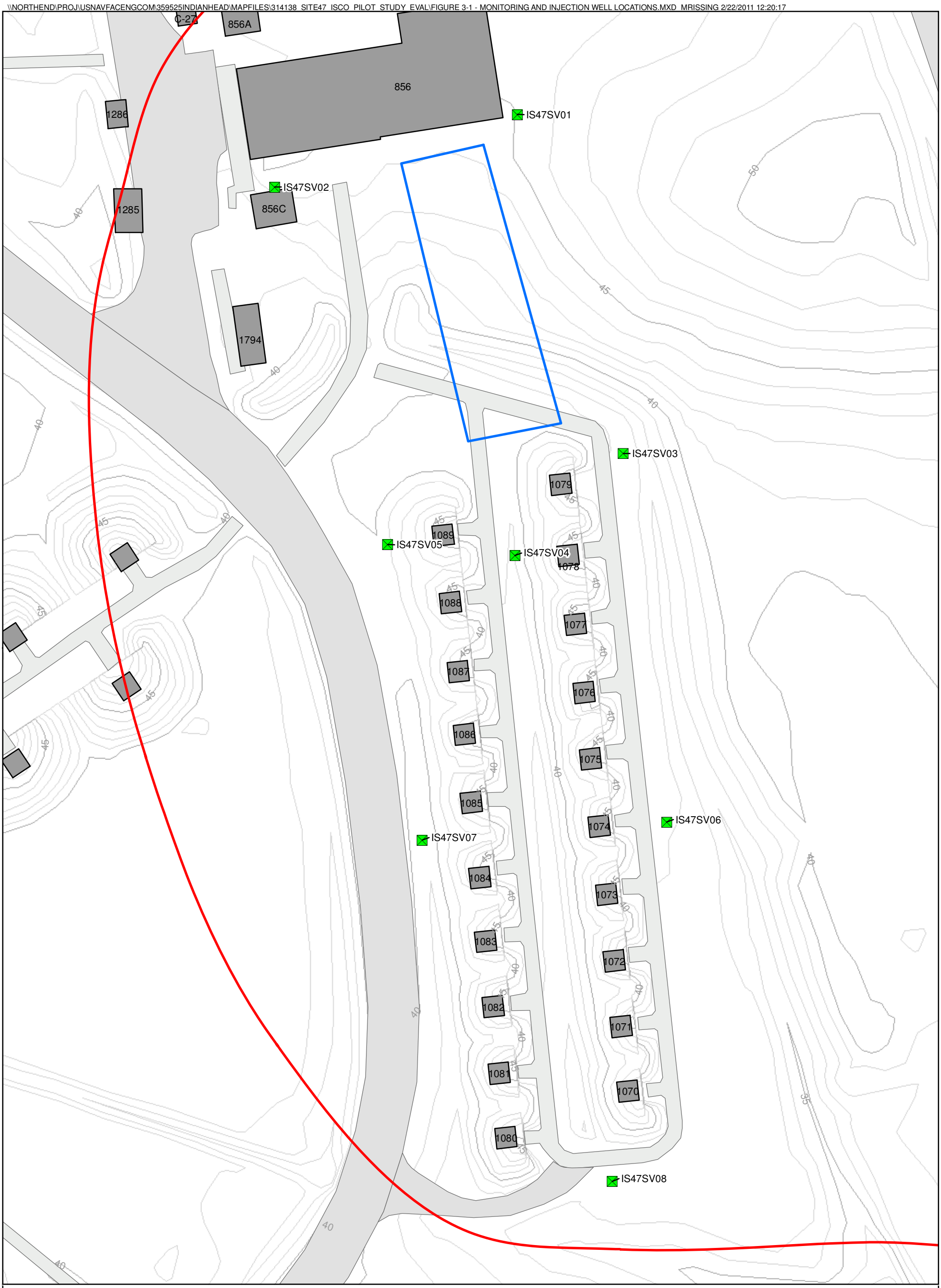

Legend

- Passive Soil Gas Venting Locations
- Elevation Contour Line (1 ft Interval)
- Elevation Contour Line (5 ft Interval)
- Pilot Study Area
- Road
- Building

N
W E
S

0 35
Feet

Figure 3-2
Passive Soil Gas Venting Locations
Site 47 ISCO Pilot Study Technology
Performance Evaluation
NSF-IH, Indian Head, Maryland

CH2MHILL®

SECTION 4

Results and Performance Assessment

This section presents the field data and laboratory analytical data collected during the pilot study, and results of the assessment of the technology's performance. Assessment of the technology was based on the following factors: 1) COC concentration trends and mass reduction estimates, 2) metal mobilization potential, 3) compatibility of ISCO with natural attenuation, and 4) refinement of the design parameters.

Table 4-1 present the analytical sampling program for baseline, 2-month post injection, and 6-month post-injection events. Table 4-2 provides the water quality parameters and field test kit data. Table 4-3 presents depth-to-water measurements. Groundwater was encountered between 28.51 and 39.05 feet above mean sea level across the site. Depth-to-water measurements were performed during baseline, 2-month, and 6-month events to show a seasonal representation for fall, winter, and summer, respectively. In comparison to the fall (baseline) monitoring event, the average water level across the site was 2.75 feet lower in the winter and 0.75 foot lower in the summer.

4.1 CT Transformation Mechanisms

Reaction mechanisms of CT treatment by alkaline-activated persulfate are complex and remain the subject of ongoing research. However, the current theory is that persulfate oxidizes hydroxide to form perhydroxide, which is the conjugate base of hydrogen peroxide. This reaction is favored at high pH. With the formation of hydrogen peroxide, alkaline-activated persulfate chemistry can behave similarly to catalalyzed hydrogen peroxide, which has been shown to degrade CT. The reaction steps include hydrogen peroxide donating an electron to another compound to form the superoxide (O_2•) radical. Research has shown that superoxide reacts with CT by attacking a chlorine molecule on the CT, reducing that chlorine to chloride, which destabilizes the molecule, breaking it down to CCl_3• (radical). CCl_3• is not stable in water, and it hydrolizes to form phosgene, which is further hydrolyzed to eventually form carbon dioxide (Roberts and Sawyer, 1981and Roberts et al., 1983). It has also been demonstrated experimentally (Watts, et al. 2005; Smith et al., 2004). The superoxide is more stable at elevated pH, hence the preference for alkaline-activated persulfate. Multiple decomposition pathways exist for PCE, both oxidative and reductive. Superoxide reduces PCE, while persulfate and other oxidants attack the double/pi bond.

4.2 Three-Dimensional Geologic Cross Sections

The Mining Visualization System (MVS) software was used to refine the two-dimensional geologic cross sections (Figure 4-1) and to create a three-dimensional geologic model (Figure 4-2). This software utilized field lithologic information collected in the field (shown on the boring logs) and survey data (Appendix B). The three geologic units used in the MVS model are silty sand, interbedded silty sand and clay, and clay. Bottom depths for the three units and survey data (easting, northing, and ground surface elevations) were entered into an

MVS borehole geology input file to create the geologic model. Figure 4-1 shows cross sections (i.e., two-dimensional vertical slices) through the geology model. The approximate lines of section are shown on the plan view of the geology model. Figure 4-2 shows two views of the three-dimensional geologic model rotated on end, one looking due north and the other looking due west.

4.3 COC Concentration Trends and Mass Reduction Estimate

The chlorinated COC concentration trend assessment and the mass reduction estimate were based on the groundwater and saturated soil data from the baseline, 2-, and 6-month post-injection monitoring events. When necessary, the groundwater data collected during the RI sampling events were also used during the assessment. The assessment focused on the target COCs (PCE, TCE, cis-1,2-DCE, vinyl chloride [VC], CT and CF). However, chloride and TOC data were used as additional indicators to demonstrate that treatment of the COCs by alkaline-activated persulfate has occurred. The behavior of COCs in the aquifer system are subject to: (1) higher spatial variability in soil data than in groundwater data, (2) multi-phase fate and transport processes of VOCs in the aquifer, and (3) random distribution of DNAPL in the subsurface system. The groundwater data were obtained from the following 10 monitoring wells: 1 (IS47MW01) located upgradient of the pilot study area, 8 (IS47MW03, IS47MW04, IS47MW19, IS47MW20, IS47MW21, IS47MW22, IS47MW23, and IS47MW24) located within the area treated, and 1 (IS47MW05) located downgradient of the pilot study area. The saturated soil data were obtained from 12 boring locations (IS47SB20 through IS47SB25[1] and IS47SB20A through IS47SB25A[2]). Figures 4-3, 4-4, and 4-5 show the groundwater and soil results for the chlorinated ethene COCs (PCE, TCE, cis-1,2-DCE, and VC), chlorinated methane COCs (CT and CF), and metal COCs (arsenic, iron, thallium, and vanadium), respectively, within the treatment zone over the performance monitoring period. Soil and groundwater raw and detect analytical data tables are provided in Appendix C.

MVS software was used to define the boundaries of the interpreted COC plumes before and 6 months after injection. Section 4.3.1 presents the results of the chlorinated COCs concentration trend analyses. The evaluation of the concentration trends focused on the chlorinated COCs because those compounds have been targeted during the pilot study. The approximate mass reduction estimates were conducted for CT and PCE because these are the primary COCs for which the ISCO application was evaluated for effectiveness.

4.3.1 COC Concentration Trends

Table 4-4 presents the trend summary of the chlorinated ethene and methane and COCs. Concentrations in upgradient (IS47MW01) and downgradient (IS47MW05) wells remained below the site remediation goals (SRGs) for the chlorinated ethenes and methanes through the pilot study. IS47MW19 had reporting limits for the chlorinated ethenes either above the SRG, or did not contain chlorinated ethenes above SRGs for groundwater, and therefore showed no trends from the alkaline-activated persulfate treatment.

---

[1] These boring locations were advanced during the baseline sampling event and later converted into monitoring wells IS47MW19 through IS47MW24 (Refer to Figures 4-3 through 4-5 for the locations).

[2] These boring locations were advanced during the 6-month post injection sampling event; each location is approximately between 2 and 5 feet away from its corresponding monitoring well location (Refer to Figures 4-3 through 4-5 for the locations)

Trends for PCE in eight wells (ISMW4703, IS47MW04, and IS47MW19 through IS47MW24) within the treatment area showed mixed results. Four wells (IS47MW03, IS47MW20, IS47MW21, and IS47MW24) showed slight increases or decreases, with PCE remaining below 100 µg/L. Concentrations of PCE, TCE and cis-DCE in groundwater in IS47MW23, located on the downgradient edge of the pilot study area, increased from 95, 20, and 19 µg/L at baseline to 1,200, 420, and 480 µg/L at 6-month post-injection, respectively. Wells IS47MW04 and IS47MW22 showed initial decreases, with subsequent rebound of PCE in groundwater. PCE concentrations in IS47MW22 decreased from 1,300 µg/L at baseline to 890 µg/L 6 months following injections, and in IS47MW04 concentrations decreased from 2,200 µg/L at baseline to 1,000 µg/L over the same period.

Chlorinated ethene concentrations in soils were less than 0.79 milligram per kilogram (mg/kg) in most cases; however, the soil sample between 6 and 9 feet bgs at IS47SB24 contained 1.4 mg/kg PCE during baseline sampling. With the exception of soil analyzed from IS47SB22 and IS47SB22A, in which several samples had concentrations not detected or below reporting limits, trends for PCE in soil samples collected from the remaining five locations indicated various amounts of PCE concentration decreases in shallow soil (< 12 feet bgs), and increases in deeper soils (>12 ft bgs).

Chlorinated methanes CT and CF in groundwater showed overall decreasing trends in four wells and general increasing trends in the other four wells within the treatment zone. Decreases occurred in IS47MW03, IS47MW04, IS47MW19, and IS47MW21, while increases were observed in IS47MW21, IS47MW22, IS47MW23, and IS47MW24. The largest decreases occurred in the wells on the upgradient portion of the pilot study treatment area, with one to two orders of magnitude decreases of CT in IS47MW19 and IS47MW21. The highest increases were observed in downgradient wells IS47MW22 and IS47MW23. Although CF can form during the biodegradation of CT, trends showing decreasing CT with a corollary increasing CF trend were not observed in the individual wells monitored.

CT in soils was detected at concentrations as high as 260 mg/kg during baseline sampling, with a maximum concentration of 25 mg/kg detected 6 months following ISCO treatment. With the exception of soils analyzed from IS47SB21, IS47SB21A, IS47SB25, and IS47SB25A, which showed varied decreases and increases in concentrations throughout the vertical column, trends for CT and CF in soil samples collected from the remaining four locations showed decreases of up to approximately one order of magnitude in shallow soil (< 12 feet bgs), and increases of between two and three orders of magnitude in deeper soils (>12 ft bgs).

The soil and groundwater results of 1,1,2,2-TCA and 1,2-DCA were difficult to assess for trends due to few detections above reporting limits prior to and following the ISCO remediation. Detected 1,1,2,2-TCA concentrations in groundwater were below SRGs or laboratory instrumentation reporting limits. 1,2-DCA was detected above its SRG in groundwater in three wells; however, the detections were low (< 20 µg/L). A slight increasing trend was observed in IS47MW23 from 0.9J at baseline to 7.1 µg/L 6 months after injection. A trend could not be discerned in the other two wells, IS47MW21 and 22, because results were very low and/or less than reporting limits during baseline and 6 months post-injection monitoring periods.

The plan and vertical view cross-sections and the 3-D plumes comparison between the baseline and 6-month post-injection sampling events for CT and PCE are presented in Figures 4-6 through 4-9. The plan view cross-section and 3-D plumes for CF, TCE, cis-1,2-DCE, and 1,2-DCA can be found in Appendix D. Figure 4-10 shows the change in maximum concentration for both soil and groundwater for CT and PCE.

4.3.2 Chloride

Chloride concentrations in 2 (IS47MW01 and IS47MW05) of the 10 monitoring wells outside the treatment area exhibited relatively stable chloride concentrations from baseline to post-ISCO application sampling events (Appendix C). The chloride concentrations ranged from 36 to 45 mg/L in IS47MW01 and from 22 to 24 mg/L in IS47MW05. Monitoring well IS47MW03 showed a decrease of chloride concentration from 20 to 8.2 mg/L, although the CT decreased at this location. Monitoring well IS47MW24 showed a slight increase in chloride, while PCE remained relatively stable at low concentrations and CT increased. Monitoring wells IS47MW04, IS47MW19, IS47MW20, IS47MW21, IS47MW22, and IS47MW23 showed overall increases during the 2-month or 6- month post-ISCO sampling events. The baseline ranged from 37 to 94 mg/L, and these concentrations increased to between 120 and 420 mg/L. Although no correlation exists between the increased chloride concentrations in groundwater and increases and decreases in PCE and CT at individual monitoring wells, the overall increase in chloride concentrations is likely related to transformation of chlorinated solvents.

4.3.3 TOC

Although -it is generally less reactive with soil organic matter than other oxidants, such as permanganate and Fenton's reagents, application of alkaline-activated persulfate may lead to a decrease in the soil TOC due to partial oxidation of soil organic matter. This could lead to COCs influxes in the groundwater from COC desorption or mass transfer from residual DNAPL. The DNAPL mass transfer in turn could also contribute to the COC influxes in the soil concentration (sorbed phase). In addition, soil and groundwater concentrations of the COCs could be affected by biodegradation. The discussion of the TOC data below is based on the CT data because it is the COC driving the need for remediation in the shallow groundwater.

TOC in soil was analyzed during baseline and 6-month post-ISCO sampling at six locations within the ISCO treatment zone. A sample from the entire saturated zone (5 to 19 feet bgs) was homogenized for the soil samples submitted for TOC analysis at each boring location. Overall, at 6 months after injection, the TOC concentrations in soil decreased up to two orders of magnitude in all locations, except at location IS47SB24/24A, which exhibited a slight TOC increase. This decreasing trend suggests that persulfate reacted with the soil organic matter. Table 6-1b in Appendix C provides soil TOC results for baseline and 6-month post-injection events.

One of the soil borings showing the highest decrease in soil TOC, IS47SB23/23A, exhibited an increase in CT and CF concentrations in groundwater (IS47MW24). The concentrations of PCE, TCE, and cis-1,2-DCE, although much lower compared to CT and CF, were increased in the same well. The increase of CT concentrations in well IS47MW22 at 6 months after injection, however, does not seem to correlate with a decrease in soil TOC concentrations. In this case, the CT influx in groundwater could be attributed to the residual DNAPL mass

transfer. In well IS47MW22, the increase in CT concentration in groundwater does not appear to correlate with a decrease in soil TOC (IS47SB24/24A). In this case, because the soil concentrations decreased, the influx of CT in groundwater could be attributed to residual DNAPL dissolution.

4.3.4 Three-Dimensional Chemistry Model

The MVS chemistry models were developed within the geology framework using analytical data from the baseline and 6-month post-injection sampling events as follows:

- Detected concentrations were used as reported.
- Non-detects were assigned half of the respective method detection limit (MDL) value.
  - Non-detects were removed if half of the MDL value was greater than the lowest isoconcentration level to be depicted for a particular analyte and was positioned among lower detected values or lower non-detect MDLs (i.e., half of the MDL value was used where applicable).
- Concentrations were assigned vertically to the mid-screen elevations of the wells.
- Event concentrations, survey data (easting, northing, ground surface elevation), well screen information (well screen top and bottom elevations), and augmentation data (see description below), were entered into MVS three dimensional groundwater chemistry (*.gwc) input files to create the various chemistry models.
- Concentrations were log-transformed prior to interpolation via kriging, which typically provides the best modeling of groundwater concentrations.
- A directional semi-variogram model with the following characteristics was specified for kriging the concentration data:
  - Horizontally anisotropic with major axis rotated 165 degrees clockwise from due north (to mirror general groundwater flow direction and conceptual plumes depicted in the Site 47 FS figures), ranges of 100 to 250 feet in the direction of the major axis, and major/minor axis ratio of approximately 1.25.
  - Horizontal/vertical anisotropy ratio typically set to 15, and in some cases to 10 where smaller horizontal ranges were used in the directional semi-variograms.
- Kriging was conducted using all data points, adaptive and proportional gridding (minimum 2 cells per layer), and a vertical resolution of 30 nodes.
- The clay unit was not included in the interpolation of concentrations, based on the assumption that the clay is acting as a (relative) hydraulic barrier to downward groundwater flow.

The baseline and 6-month post-injection events data were limited in extent, comprising 10 sampling locations, each in the immediate vicinity of the study area (Table 4-4). For this reason, these datasets were augmented in the following ways:

- Results for wells not sampled at baseline or 6-month post-injection were included from the previous events listed in the interpreted isoconcentration contour maps presented in Figures 2-2, 2-4, and 2-5 of the FS report.
  - Non-detects shown as "ND" were assigned half of the lowest MDL value reported among the baseline and 6-month post-injection results.
  - Concentrations were assigned vertically to the mid-screen elevations of the wells.
- Data points digitized from the lowest isoconcentration contours depicted in Figures 2-2, 2-4, and 2-5 of the FS report were added to both the baseline and 6-month post-injection datasets for analytes with detections above maximum contaminant level that extend beyond the study area (CT, PCE, TCE, and CF).
  - Data points were assigned the value of the respective isoconcentration contour.
  - Data points were assigned elevations ranging from 28.5 to 30.5 feet above mean sea level (amsl), which lie within the range of mid-screen elevations of 11 to 31 feet amsl (average mid-screen elevation is approximately 27.3 feet amsl).
- Other data points were added sparingly to control the interpolations in areas of limited data.

The plan and vertical view cross-sections and the three-dimensional plume comparisons (baseline and 6-month post-injection) for CT and PCE are shown in Figures 4-6 through 4-9. Figure 4-6 and Figure 4-8 show plan views created by projecting to a horizontal plane one or more two-dimensional slices through the respective chemistry models. These slices are horizontal to sub-horizontal in orientation, and are positioned to show the greatest extent of, and maximum concentrations within each plume. The cross-sections (i.e. two-dimensional vertical slices) also shown were taken along the approximate lines of section shown on the plan views. Plan views and cross-sections are depicted for both the baseline and the 6-month post-injection sampling events. Figure 4-7 and Figure 4-9 show three-dimensional isoconcentration surfaces for select concentrations, as defined by the chemistry models for both the baseline and the 6-month post-injection sampling events. The plan view cross-section and three-dimensional plumes for CF, TCE, cis-1,2-DCE, and 1,2-DCA can be found in Appendix D.

4.3.5 Mass Reduction Estimate

Approximate estimates of CT and PCE mass in soil and groundwater (exclusive of residual DNAPL mass) treated by alkaline-activated persulfate, based on 6 months of post-injection monitoring, were made using the area and volume of plumes generated from the MVS model. Several assumptions were used for the mass reduction estimates:

- Groundwater was assumed to be in equilibrium with respect to mass transfer between the soil and groundwater, and under normal atmospheric conditions.
- Area and volume of plumes included for the mass reduction estimate were limited to the area that was considered to be affected by the alkaline-activated persulfate treatment during the pilot study; for PCE and CT, this is the area where concentrations are greater than 500 µg/L.

- Although soil concentrations can be calculated from the groundwater concentrations, the actual soil concentrations were used.
- This analysis does not account for mass that may be present as DNAPL because it is unknown how much product is present in the subsurface. The presence of DNAPL may result in an underestimation of the total amount of contaminant mass present.

Table 4-5 presents the mass reduction estimates for CT and PCE for the baseline and 6-month post-injection events. The mass reduction estimates for CT are 6 pounds (47percent) in the dissolved phase and 164 pounds (83percent) in the adsorbed phase, which is approximately 170 pounds (81percent) of total reduction excluding residual DNAPL. The mass reduction estimates for PCE are 3.2 pounds (81percent) in the adsorbed phase, with negligible mass reduction applied to the dissolved phase. The total PCE mass reduction excluding residual DNAPL is 3.2 pounds (79percent).

4.4 Compatibility of Alkaline-activated Persulfate with Natural Attenuation

Natural attenuation involves a variety of processes, including dispersion, dilution, volatilization, sorption, and biodegradation. The aerobic and anaerobic biodegradation pathways for chloroethenes, such as PCE, TCE, cis-1,2-DCE and VC, are relatively well known. Under anaerobic conditions, these VOCs typically degrade through a reductive dechlorination process involving chlororespiration. Biotransformation of chloromethanes such as CT and CF has been found to differ significantly from biodegradation pathways of chloroethenes. Chloromethanes are biotransformed by cometabolic processes, in which the reactions do not provide energy to the bacteria that facilitate the transformation. Biodegradation of CT under sulfate-reducing conditions and facilitated by addition of vitamin B12 as a co-factor has been found to proceed through a hydrolytic pathway, rather than reductive dechlorination. In addition to these pathways, CT may also degrade directly to carbon disulfide under low redox conditions and in the presence of sulfide and coenzymes or surface catalysts. Observed biodegradation rates of chloromethanes in groundwater tend to vary and to be less predictable and often lower than biodegradation rates of chloroethenes (Shan, et al., 2010),

To assess the compatibility of alkaline-activated persulfate with natural biological attenuation processes following treatment, select natural attenuation indicator parameters were analyzed for baseline, and 2-month and 6-month post-injection events. Chloride, nitrate, nitrite, sulfate, and sulfide are the parameters that were analyzed at all monitoring events. In addition to those analyses, alkalinity, MEE, and ferrous iron were analyzed during the baseline and 6-month post-injection monitoring events. Field parameters (pH, ORP, DO, temperature, specific conductance, and turbidity) were measured during all monitoring events. The compatibility of ISCO with natural attenuation, in particular biodegradation, was evaluated based on the comparison of the dominant terminal electron accepting process in the upgradient and downgradient wells and the wells within the pilot study area before and 6 months after injection. The optimum terminal electron accepting processes for biodegradation of CT, PCE, and TCE via reductive dechlorination are sulfate reducing and methanogenesis. An alternative pathway of CT to carbon disulfide could also occur via sulfate reducing conditions (Biteman et al., 2010).

Table 4-6, Table 4-7, and Table 4-8 provide geochemical indicator parameters results for baseline, 2-month post-injection, and 6-month post-injection events, respectively. The 6-month post–injection results indicated that redox conditions are similar to the baseline redox conditions. Sulfate concentrations remained elevated within the treatment zone. However, an increase in sulfate is not expected to be detrimental to biodegradation of the VOCs. Overall, alkaline-activated persulfate within the treatment zone is not expected to have a long-term impact on the natural attenuation capacity, in particular biodegradation.

4.5 Metals Solubilization

Studies over the past 10 years (Siegrist et al., 2011) have shown metal solubilization from ISCO applications to be temporary in nature, with metal concentrations returning to background values once oxidative conditions revert to naturally occurring conditions. Nonetheless, redox-sensitive metals are often oxidized to a more-soluble state during ISCO, and can become mobile under prolonged oxidative conditions and relatively swift groundwater velocities. Although neither of these conditions applies to the pilot study area, select metals were analyzed to assess their site-specific potential for solubilization and mobilization downgradient of the pilot study area. Groundwater velocity in the pilot study area is 10.7 feet per year, and background groundwater reduction-oxidation conditions are expected to be achieved in a 2- to 12-month period, based on trends observed in the 2- and 6-month post-injection data.

The results of the bench-scale studies conducted for Site 47 indicated that the potential for metal solubilization existed for select metals: aluminum, arsenic, chromium, sodium, and vanadium (CH2M HILL, 2007). However, the short-term nature of the bench-scale studies precluded any meaningful prediction of how long the metals would persist or remain in solution. The pilot study indicated that the sodium trends primarily reflect added compounds during injections, rather than solubilization from changed redox conditions; therefore, this metal was not evaluated. The other bench-scale metals tested, in addition to two additional site COCs (iron and thallium) are discussed. Table 4-9 summarizes select dissolved metal groundwater results from the performance monitoring events. Concentrations of respective metals in soil are summarized in Table 4-10.

The results from the 2-month post-ISCO sampling event indicate that metal solubilization occurred at varying degrees for aluminum, arsenic, chromium, iron, thallium, and vanadium within the pilot study area. After 6 months, concentrations of most metals returned to near-background levels or showed decreasing trends relative to the 2-month sampling event data. However, there were some exceptions that were attributable to the location of the monitoring wells, the injection well layout, and/or the volume distribution of the oxidant. It is likely that the most highly influenced area, which received the majority of the injectate, did not reach equilibrium by the 6-month post-injection event, creating a delayed stabilization and decreasing trend in inorganic constituents. Aluminum concentrations continued to increase and remained above baseline conditions in three wells: IS47MW04, IS47MW19, and IS47MW22. Arsenic concentrations continued to increase and remained above baseline conditions in one well: IS47MW21. Iron concentrations continued to increase and remained above baseline conditions in three wells: IS47MW04, IS47MW19, and IS47MW22. Vanadium concentrations continued to increase and remained above baseline conditions in two wells: IS47MW04 and IS47MW23. Thallium returned to baseline

conditions in all monitoring wells. Overall downward trends and nearly baseline conditions achieved in groundwater after the 6-month monitoring period indicate that downgradient mobilization during a full-scale event is unlikely.

Metal results in six soil samples analyzed at baseline and 6 months post-ISCO remediation exhibited a slight decreasing trend (Table 4-10). Two exceptions were chromium at location IS47MW20 and arsenic at location IS47MW25, which exhibited slight increases. Aluminum and iron, exhibiting the highest soil concentrations, generally decreased up to 10 percent with the exception of IS47MW24, which decreased 52 percent. This decrease may correlate with the increasing trends observed in the dissolved concentrations of iron and aluminum in some monitoring well locations.

4.6 Impact to Current Site Use

The evaluation on the ISCO impacts to the current site use during the pilot study focuses on the potential gas generation. During the pilot study, eight passive soil vents (IS47SV01 – IS47SV08) were installed upgradient and downgradient of the study area (Figure 3-2). These vents were used to quantify offgas vapor concentrations during ISCO implementation. All LEL readings collected from the vents were zero; therefore, the potential for significant accumulation of subsurface vapor onsite as a result of ISCO is considered negligible.

4.7 Refinement of Field Design Parameters

The pilot study provides validation to the field design parameters, specifically the radius of influence (ROI) of the injection wells and oxidant dosage mass requirements.

4.7.1 ROI

The ROI of the oxidant injected into shallow/deep well pairs was assessed during the injection and after the injection event. The groundwater parameters used for the assessment included an EC probe, sodium persulfate concentrations, pH, and ORP.

EC profiling was performed within 24 hours after oxidant injection terminated, and again 6 months after the injection event. Within 24 hours after injection, EC profiles were measured at eight locations: 1) two background locations (IS47ECBG01 and IS47ECBG02), 2) three locations approximately 8, 12, and 18 feet from injection wells IS47IW10S/D (IS47EC01 through IS47EC03), and 3) three locations 6, 10, and 16 feet away from injection wells IS47IW04S/D (IS47EC04 through IS47EC06). Six months after injection, EC profiles were measured at six locations (IS47EC07 through IS47EC12); each location was offset by 2 feet from the location measured immediately after the injection (i.e., IS47EC07 is approximately 2 feet away from IS47EC01). Appendix E presents the results of the EC profiling.

At the two background locations, the EC values for the 0 to 25 feet bgs interval were close to 0 miliSiemens per meter (mS/m), indicating that the subsurface materials are homogeneous within this interval. Within 18 feet away from the injection well pair IS47IW10S/D, the spike of EC values as high as 1,400 mS/m was observed within the 7 to 20 foot bgs interval. The closest location from the wells (IS47EC01) showed a more uniform spike within the entire injection interval from 7 to 18 feet bgs. Farther away from the wells (IS47EC02 and 03), higher EC values were observed within the deeper injection interval (12 to 18 feet bgs). The

EC profiles seem to correlate with the volume proportion of oxidant delivered in these well pairs (the ratio of oxidant volume in the deep and shallow wells at this location was approximately 10 to 1). At the injection well pairs IS47IW04S/D, where the ratio of oxidant volume between the deep and shallow wells was 2 to 1, the increase in EC values as high as 1,600 mS/m were observed more uniformly throughout the injection interval. The increase in EC values compared to the background at varying distances from the injection wells demonstrated that oxidant was distributed as far as 18 feet from the wells. The estimated ROI used in the design was 12 feet.

The 6-month post-injection EC profiling indicated that residual oxidant or sulfate was still present in the subsurface; however, the conductivity was approximately an order of magnitude lower.

The persulfate concentration in monitoring wells provided further information regarding oxidant distribution. Injection wells ranged from 5 to 13 feet away from monitoring wells (Figure 3-1). Persulfate concentrations within the treatment zone monitoring wells ranged from 420 to 28,000 mg/L during injection. This indicates that an ROI of up to 13 feet was achieved. The pH and ORP values in monitoring wells within the study area, increased between the baseline and 2 months after injection, then declined from 2 to 6 months after injection (Table 4-2), providing additional confirmation of the ROI achieved.

4.7.2 Oxidant Dosage and Injection Flow Rates

The design oxidant concentration and pore volume displacement was 55 g/L and 0.8 to 0.85, respectively. Because oxidant daylighting occurred, adjustments to the injection volume, injection flow rates, and concentration of oxidant were made in the field. The range of the actual oxidant concentrations was between 55 and 80 g/L; 50 percent of the total oxidant volume was injected at 55 g/L oxidant concentration and 40 percent of the volume was injected at 80 g/L. Because the observed ROI appeared consistently to be greater than the estimated ROI used in the design (indicating a lower effective pore volume in the subsurface than anticipated), the volume of the reagent injected could be reduced in the future to achieve similar pore volume treatments.

The designed oxidant reagent injection rate was 5 gallons per minute (gpm) for each injection well. Pumping rates for the 28 injection wells ranged from <0.5 gpm to 3.5 gpm, with an average of 2.4 gpm, indicating a lower effective pore volume and/or hydraulic conductivity in the subsurface than originally anticipated. The achievable range will be incorporated in the full-scale design.

TABLE 4-1
Groundwater and Soil Sampling and Analysis Summary
Site 47 ISCO Pilot Study Technology Performance Evaluation
NSF-IH, Indian Head, Maryland

Station ID	VOCs	TAL Metals[c]	Sulfate, Nitrate, Nitrirte, Chloride	Sulfide	Ferrous Iron	Alkalinity	Methane/ Ethane/Ethene	TOC	Ferrous Iron (test kit)	Dissolved Oxygen (test kit)	Persulfate (test kit)	pH test strip	Water Level Measurement
Groundwater Samples[a,b]													
IS47MW01	B, 2, 6	B, 2, 6	B, 2, 6	B, 2, 6	B, 6	B, 6	B, 6		B, 2, 6	B, 2, 6	2, 6	2, 6	B, 2, 6
IS47MW02									2, 6	2, 6	2, 6	2, 6	B, 2, 6
IS47MW03	B, 6	B, 2, 6	B, 2, 6	B, 2, 6	B, 6	B, 6	B, 6		B, 2, 6	B, 2, 6	2, 6	2, 6	B, 2, 6
IS47MW04	B, 2, 6	B, 2, 6	B, 2, 6	B, 2, 6	B, 6	B, 6	B, 6		B, 2, 6	B, 2, 6	2, 6	2, 6	B, 2, 6
IS47MW05	B, 2, 6	B, 2, 6	B, 2, 6	B, 2, 6	B, 6	B, 6	B, 6		B, 2, 6	B, 2, 6	2, 6	2, 6	B, 2, 6
IS47MW06									2, 6	2, 6	2, 6	2, 6	B, 2, 6
IS47MW07													B
IS47MW08													B
IS47MW09													B
IS47MW10									2, 6	2, 6	2, 6	2, 6	B, 2, 6
IS47MW11													
IS47MW12													B
IS47MW13													
IS47MW14													
IS47MW15													
IS47MW16													
IS47MW17													
IS47MW18													
IS47MW19	B, 6	B, 2, 6	B, 2, 6	B, 2, 6	B, 6	B, 6	B, 6		B, 2, 6	B, 2, 6	2, 6	2, 6	B, 2, 6
IS47MW20	B, 6	B, 2, 6	B, 2, 6	B, 2, 6	B, 6	B, 6	B, 6		B, 2, 6	B, 2, 6	2, 6	2, 6	B, 2, 6
IS47MW21	B, 2, 6	B, 2, 6	B, 2, 6	B, 2, 6	B, 6	B, 6	B, 6		B, 2, 6	B, 2, 6	2, 6	2, 6	B, 2, 6
IS47MW22	B, 2, 6	B, 2, 6	B, 2, 6	B, 2, 6	B, 6	B, 6	B, 6		B, 2, 6	B, 2, 6	2, 6	2, 6	B, 2, 6
IS47MW23	B, 2, 6	B, 2, 6	B, 2, 6	B, 2, 6	B, 6	B, 6	B, 6		B, 2, 6	B, 2, 6	2, 6	2, 6	B, 2, 6
IS47MW24	B, 2, 6	B, 2, 6	B, 2, 6	B, 2, 6	B, 6	B, 6	B, 6		B, 2, 6	B, 2, 6	2, 6	2, 6	B, 2, 6
Soil Samples													
IS47SB20	B	B						B					
IS47SB21	B	B						B					
IS47SB22	B	B						B					
IS47SB23	B	B						B					
IS47SB24	B	B						B					
IS47SB25	B	B						B					
IS47SB26	6	6						6					
IS47SB27	6	6						6					
IS47SB28	6	6						6					
IS47SB29	6	6						6					
IS47SB30	6	6						6					
IS47SB31	6	6						6					

Notes:

VOC - volatile organic compound

TAL - target analyte list

TOC - total oranic carbon

B = Baseline Sampling Event

2 = 2-month post-injection event

6 = 6-month post-injection event

[a] Water quality parameters (DO, ORP, specific conductance, pH, turbidity, and temperature) were also collected from monitoring wells during each event; Refer to Table 4-2

[b] VOCs were not analyzed at IS47MW03, IS47MW04, IS47MW19, IS47MW10, IS47MW21, IS47MW22, IS47MW23, IS47MW24 due to persulfate concentrations greater than 7 miligrams per liter

[c] Both total and dissolved metals were collected for the groundwater samples

TABLE 4-2
Summary of Groundwater Monitoring
Site 47 ISCO Pilot Study Technology Performance Evaluation
NSF-IH, Indian Head, Maryland

		pH																
Date		IS47MW01	IS47MW02	IS47MW03	IS47MW04	IS47MW05	IS47MW06	IS47MW07	IS47MW08	IS47MW09	IS47MW10	IS47MW12	IS47MW19	IS47MW20	IS47MW21	IS47MW22	IS47MW23	IS47MW24
Baseline																		
10/13/2009 - 10/15/2009		5.78		4.59	4.03	5.84							4.62	4.00	4.05	3.98	4.91	4.07
During Injection																		
11/7/2009	AM												13.48		13.38	7.41		
	PM												13.23		9.30	12.80		
11/11/2009	AM												13.11		13.08	12.34		
	PM												12.90		8.86	13.53		
11/12/2009	PM												13.29		4.39	13.78		
11/13/2009	AM												13.53		11.67	13.65		
	PM												13.28		10.10	14.03		
11/14/2009	AM												13.19		12.44	13.63		
	PM												13.07		8.72	13.45		
11/18/2009					13.29									13.16				13.33
11/19/2009				13.92	12.50									13.45	13.32	13.48	8.59	13.58
11/20/2009			6.38	13.69	12.18	6.12	6.15				5.96		13.06					
2-month Post Injection																		
2/2/2010 - 2/4/2010		6.18	5.68	10.06	5.18	6.19	5.59				5.79		9.78	10.50	6.51	5.90	5.95	6.91
6-month Post Injection																		
7/6/2010 - 7/8/2010		5.46	6.43	8.92	4.05	5.74	5.53				5.66		9.52	9.87	8.24	4.69	8.60	5.37

		Conductivity (mS)																
Date		IS47MW01	IS47MW02	IS47MW03	IS47MW04	IS47MW05	IS47MW06	IS47MW07	IS47MW08	IS47MW09	IS47MW10	IS47MW12	IS47MW19	IS47MW20	IS47MW21	IS47MW22	IS47MW23	IS47MW24
Baseline																		
10/13/2009 - 10/15/2009		0.255		0.129	0.389	0.179							0.999	0.323	0.347	0.417	0.192	0.308
During Injection																		
11/7/2009	AM												76.50		56.10	14.40		
	PM												53.40		7.00	36.70		
11/11/2009	AM												66.30		61.10	8.12		
	PM												61.00		16.00	99.90		
11/12/2009	PM												8.43		15.80	err		
11/13/2009	AM												93.20		22.80	err		
	PM												80.60		7.91	err		
11/14/2009	AM												85.30		31.10	err		
	PM												80.40		42.31	err		
11/18/2009					err									78.30				err
11/19/2009				99.90	77.40									74.20	78.80	73.40	38.00	err
11/20/2009			0.39	99.90	62.80	0.29	0.22				0.36		80.70					
2-month Post Injection																		
2/2/2010 - 2/4/2010		0.255	1.94	0.306	5.69	0.177	0.179				0.230		31.10	10.70	34.80	19.10	17.10	23.50
6-month Post Injection																		
7/6/2010 - 7/8/2010		0.287	17.10	99.90	7.00	0.181	0.306				0.291		99.90	7.37	99.90	13.60	18.80	3.91

TABLE 4-2
Summary of Groundwater Monitoring
Site 47 ISCO Pilot Study Technology Performance Evaluation
NSF-IH, Indian Head, Maryland

		Temperature (°C)																
Date		IS47MW01	IS47MW02	IS47MW03	IS47MW04	IS47MW05	IS47MW06	IS47MW07	IS47MW08	IS47MW09	IS47MW10	IS47MW12	IS47MW19	IS47MW20	IS47MW21	IS47MW22	IS47MW23	IS47MW24
Baseline																		
10/13/2009 - 10/15/2009		18.10		22.60	23.01	21.68							23.13	20.00	19.70	23.55	23.82	23.51
During Injection																		
11/7/2009	AM												18.96		17.00	19.35		
	PM												21.82		20.84	20.63		
11/11/2009	AM												20.21		18.63	17.92		
	PM												20.15		18.40	19.19		
11/12/2009	PM												21.96		19.62	21.31		
11/13/2009	AM												23.09		20.73	21.74		
	PM												23.28		20.58	22.30		
11/14/2009	AM												22.98		20.88	22.45		
	PM												23.67		20.85	22.32		
11/18/2009					22.86									21.22				24.81
11/19/2009				22.08	23.11									20.68	20.60	21.96	22.38	24.85
11/20/2009			20.06	23.77	22.81	17.58	16.89				16.98		24.38					
2-month Post Injection																		
2/2/2010 - 2/4/2010		13.86	13.70	18.00	12.16	11.76	8.67				12.00		16.40	18.50	22.50	13.70	12.49	14.20
6-month Post Injection																		
7/6/2010 - 7/8/2010		17.80	25.50	26.30	4.73	18.20	7.62				16.70		23.10	6.24	26.00	3.89	2.84	4.81

		Dissolved Oxygen (mg/L)																
Date		IS47MW01	IS47MW02	IS47MW03	IS47MW04	IS47MW05	IS47MW06	IS47MW07	IS47MW08	IS47MW09	IS47MW10	IS47MW12	IS47MW19	IS47MW20	IS47MW21	IS47MW22	IS47MW23	IS47MW24
Baseline																		
10/13/2009 - 10/15/2009		0.44		5.70	2.50	2.70							3.10	1.48	1.20	6.50	2.30	2.50
During Injection																		
11/7/2009	AM												8.43		8.20	5.29		
	PM												8.38		5.68	4.57		
11/11/2009	AM												6.51		6.40	5.72		
	PM												3.68		5.35	4.93		
11/12/2009	PM												0.38		0.38	0.37		
11/13/2009	AM												0.48		0.44	0.44		
	PM												0.59		0.74	0.38		
11/14/2009	AM												1.30		0.41	0.37		
	PM												0.96		0.47	0.42		
11/18/2009					0.39									0.42				0.42
11/19/2009				13.67	1.49									1.68	0.94	2.44	0.56	0.43
11/20/2009			0.46	16.46	9.82	0.46					1.95		1.42					
2-month Post Injection																		
2/2/2010 - 2/4/2010		0.88	2.59	4.53	0.80	0.59	7.28				4.08		0.30	0.43	4.07	5.49	0.94	2.93
6-month Post Injection																		
7/6/2010 - 7/8/2010		8.34	6.83	2.69	12.78	8.34	1.97				11.69		2.32	0.97	2.30	0.87	0.00	4.24

TABLE 4-2
Summary of Groundwater Monitoring
Site 47 ISCO Pilot Study Technology Performance Evaluation
NSF-IH, Indian Head, Maryland

		Oxidation Reduction Potential (mV)																
Date		IS47MW01	IS47MW02	IS47MW03	IS47MW04	IS47MW05	IS47MW06	IS47MW07	IS47MW08	IS47MW09	IS47MW10	IS47MW12	IS47MW19	IS47MW20	IS47MW21	IS47MW22	IS47MW23	IS47MW24
Baseline																		
10/13/2009 - 10/15/2009		-47		248	-91	-105							34	302	87	30	-80	15
During Injection																		
11/7/2009	AM												85		34	305		
	PM												40		236	60		
11/11/2009	AM												136		160	160		
	PM												136		277	150		
11/12/2009	PM												180		379	239		
11/13/2009	AM												252		131	263		
	PM												249		155	343		
11/14/2009	AM												274		232	326		
	PM												277		228	370		
11/18/2009					295									293				315
11/19/2009				344	293									290	272	297	309	336
11/20/2009			188	338	259	75	582				284		310					
2-month Post Injection																		
2/2/2010 - 2/4/2010		-5	80	28	213	-52	250				233		145	-77	28	161	164	179
6-month Post Injection																		
7/6/2010 - 7/8/2010		-6	-95	43	160	-60	271				224		-43	-92	-148	182	-331	190

		Turbidity (NTU)																
Date		IS47MW01	IS47MW02	IS47MW03	IS47MW04	IS47MW05	IS47MW06	IS47MW07	IS47MW08	IS47MW09	IS47MW10	IS47MW12	IS47MW19	IS47MW20	IS47MW21	IS47MW22	IS47MW23	IS47MW24
Baseline																		
10/13/2009 - 10/15/2009		27.9		20.7	2.8	3.7							22.5	0.8	2.3	7.0	14.6	1.2
During Injection																		
11/7/2009	AM												99.0		181.0	366.0		
	PM												73.3		349.0	471.0		
11/11/2009	AM												55.8		66.2	400.0		
	PM												51.4		279.0	130.0		
11/12/2009	PM												17.0		451.0	0.0		
11/13/2009	AM												0.0		109.0	12.8		
	PM												55.0		126.0	0.0		
11/14/2009	AM												82.2		18.9	30.4		
	PM												23.4		194.0	err		
11/18/2009					22.7									5.6				58.7
11/19/2009				52.1	12.0									109.0	42.6	10.9	304.0	59.7
11/20/2009			49.6	165.0	20.5	44.6	34.0				162.0		51.9					
2-month Post Injection																		
2/2/2010 - 2/4/2010		26.4	15.0	err	22.9	22.0	27.9				3.8		140.0	75.8	60.6	31.7	104.0	24.3
6-month Post Injection																		
7/6/2010 - 7/8/2010		0.0	0.0	err	95.7	0.0	81.9				19.5		err	413.0	err	12.6	161.0	err

TABLE 4-2
Summary of Groundwater Monitoring
Site 47 ISCO Pilot Study Technology Performance Evaluation
NSF-IH, Indian Head, Maryland

		Persulfate (mg/L)																
Date		IS47MW01	IS47MW02	IS47MW03	IS47MW04	IS47MW05	IS47MW06	IS47MW07	IS47MW08	IS47MW09	IS47MW10	IS47MW12	IS47MW19	IS47MW20	IS47MW21	IS47MW22	IS47MW23	IS47MW24
During Injection																		
11/7/2009	AM												NA		NA	> 70		
	PM												> 70		> 70	> 70		
11/11/2009	AM												NA		NA	> 70		
11/12/2009	PM												5,600 - 8,400		420 - 560	> 70		
11/13/2009	AM												8,400 - 11,200		1,120 - 1,400	14,000 - 16,800		
	PM												5,600 - 8,400		560 - 700	22,400 - 28,000		
11/14/2009	AM			22,400 - 28,000	5,600 - 8,400								8,400 - 11,200	16,800 - 19,600	5,600 - 8,400	22,400 - 28,000	5,600 - 8,400	980 - 1,120
	PM												11,200 - 14,000		420 - 560	22,400 - 28,000		
11/18/2009					11,200 - 14,000									8,400 - 11,200				11,200 - 14,000
11/19/2009				8,400	8,400 - 11,200										14,000 - 16,800	8,400 - 11,200	8,400 - 11,200	8,400 - 11,200
11/20/2009			0	16,800	16,800	0 - 140	0 - 140				0 - 140		11,200					
2-month Post Injection																		
2/2/2010 - 2/4/2010		0	1	7 - 14	25 - 42	0	0				0		> 700	210	> 70	210	70	> 350
6-month Post Injection																		
7/6/2010 - 7/8/2010		0	0	< 7	0	0	0				0		7	0	0	0	0	35

	Ferrous Iron Test Kit (mg/L)																
Date	IS47MW01	IS47MW02	IS47MW03	IS47MW04	IS47MW05	IS47MW06	IS47MW07	IS47MW08	IS47MW09	IS47MW10	IS47MW12	IS47MW19	IS47MW20	IS47MW21	IS47MW22	IS47MW23	IS47MW24
Baseline																	
10/13/2009 - 10/15/2009	4		3	> 10	> 10							> 10	> 10	> 10	> 10	10	> 10
2-month Post Injection																	
2/2/2010 - 2/4/2010	3	> 20	1	> 50	> 10	0				0		< 1	5	15	3	5	< 1
6-month Post Injection																	
7/6/2010 - 7/8/2010	3	2	0	> 10	> 10	0				0		0	0	3	> 10	10	6

	Dissolved Oxygen Test Kit (mg/L)																
Date	IS47MW01	IS47MW02	IS47MW03	IS47MW04	IS47MW05	IS47MW06	IS47MW07	IS47MW08	IS47MW09	IS47MW10	IS47MW12	IS47MW19	IS47MW20	IS47MW21	IS47MW22	IS47MW23	IS47MW24
Baseline																	
10/13/2009 - 10/15/2009	0.2		4.0	0.0	1.0							0.1	0.4	0.2	0.0	0.0	0.3
2-month Post Injection																	
2/2/2010 - 2/4/2010	0.3	0.0	4.0	0.9	0.4	5.0				1.0		> 12	8-12	8-12	6.0	3-4	9.0
6-month Post Injection																	
7/6/2010 - 7/8/2010	0.1	0.3	5.0	0.3	0.0	1.0				3.0		3.0	2.0	2.0	1.0	1.5	4.0

	pH Test Strip																
Date	IS47MW01	IS47MW02	IS47MW03	IS47MW04	IS47MW05	IS47MW06	IS47MW07	IS47MW08	IS47MW09	IS47MW10	IS47MW12	IS47MW19	IS47MW20	IS47MW21	IS47MW22	IS47MW23	IS47MW24
2-month Post Injection																	
2/2/2010 - 2/4/2010	5 - 6	6	10	5 - 6	5 - 6	5 - 6				5		10	11	7	6	5 - 6	6
6-month Post Injection																	
7/6/2010 - 7/8/2010	6	6	6	4	5	5.5				5.0		10	10	9	4.5	8	5.5

Notes:

err - greater than Horiba limitations

BTOC - below top of casing

mg/L - milligrams per liter

mS - millisiemens

mV - millivolts

NTU - Nephelometric Turbidity Units

pH data were collected with a HORIBA

Persulfate data was collected using a field test kit

TABLE 4-3
Water Level Measurements and Elevations
Site 47 ISCO Pilot Study Technology Performance Evaluation
NSF-IH, Indian Head, Maryland

Monitoring Well	Elevation at Top of Casing (feet amsl)	Baseline (10/13/09 - 10/15/09)		2-month Post Injection (2/2/10 - 2/4/10)		6-month Post Injection (7/6/10 - 7/8/10)	
		Depth to Water (ft BTOC)	Groundwater Elevation (ft amsl)	Depth to Water (ft BTOC)	Groundwater Elevation (ft amsl)	Depth to Water (ft BTOC)	Groundwater Elevation (ft amsl)
IS47MW01	48.77	13.94	34.83	10.85	37.92	13.31	35.46
IS47MW02	42.01	6.64	35.37	4.81	37.20	5.64	36.37
IS47MW03	47.09	11.19	35.90	8.04	39.05	10.28	36.81
IS47MW04	43.08	8.09	34.99	5.27	37.81	7.55	35.53
IS47MW05	40.38	6.47	33.91	4.93	35.45	6.41	33.97
IS47MW06	41.58	6.49	35.09	3.25	38.33	6.07	35.51
IS47MW07	43.20	8.22	34.98	-	-	-	-
IS47MW08	48.05	13.08	34.97	-	-	-	-
IS47MW09	50.38	15.1	35.28	-	-	-	-
IS47MW10	44.38	9.6	34.78	6.74	37.64	8.09	36.29
IS47MW12	34.95	6.44	28.51	-	-	-	-
IS47MW19	41.95	6.95	35.00	3.83	38.12	5.89	36.06
IS47MW20	42.86	8.15	34.71	5.57	37.29	7.03	35.83
IS47MW21	42.94	8.25	34.69	4.84	38.10	6.93	36.01
IS47MW22	39.95	5.35	34.60	2.71	37.24	4.31	35.64
IS47MW23	39.01	4.31	34.70	1.58	37.43	3.52	35.49
IS47MW24	40.89	6.22	34.67	3.19	37.70	6.16	34.73

Notes:
ft amsl = feet above mean sea level
ft btoc = feet below top of casing

TABLE 4-4

Ethene and Methane COC Results for Baseline, 2-Month, and 6-Month Post-Injection

Site 47 ISCO Pilot Study Technology Performance Evaluation

NSF-IH, Indian Head, Maryland

Monitoring Well ID	Groundwater (µg/L)																		Notes
	Chlorinated Ethene COCs												Chlorinated Methane COCs						
	Baseline				2-Month Post-Injection				6-Month Post-Injection				Baseline		2-Month Post-Injection		6-Month Post-Injection		
	PCE	TCE	Cis-1,2-DCE	VC	PCE	TCE	Cis-1,2-DCE	VC	PCE	TCE	Cis-1,2-DCE	VC	CT	CF	CT	CF	CT	CF	
IS47MW01	3	76	19	0.8 J	3	64	14	0.4	3.4	89	8.4	ND	ND	ND	ND	ND	ND	ND	Upgradient, site background well
IS47MW03	12	3 J	2 J	ND	NS	NS	NS	NS	0.41 J	0.57 J	ND	ND	9,600	4,600	NS	NS	42	42	Within treatment zone, northern cluster
IS47MW04	2,200	88	100	ND	400	45	36	0.7 J	1,000	55	55	ND	27,000	20,000	2,700	8,400	12,000	20,000	Within treatment zone, southern cluster
IS47MW05	ND	ND	3	4	ND	ND	5	1 J	ND	0.41 J	6.1	0.76 J	ND	ND	0.6 JB	ND	0.26 J	ND	Downgradient of treatment zone
IS47MW19	ND	ND	ND	ND	NS	NS	NS	NS	ND	ND	ND	ND	150,000	37,000	NS	NS	1,600	1,200	Within treatment zone, northern cluster
IS47MW20	29	ND	ND	ND	NS	NS	NS	NS	77 J	ND	ND	ND	29,000	27,000	NS	NS	30,000	61,000	Within treatment zone, northern cluster
IS47MW21	ND	ND	ND	ND	33	6	5	ND	51	9.8 J	45	ND	93,000	44,000	17,000	14,000	1,700	16,000	Within treatment zone, northern cluster
IS47MW22	1,300	250	190	ND	730	ND	ND	ND	890	ND	ND	ND	69,000	23,000	280,000	26,000	220,000	32,000	Within treatment zone, southern cluster
IS47MW23	95	20	19	0.3 J	2,700	390	340	0.6 J	1,200	420	480	2.1 J	0.3 J	6	3,200	13,000	830	6,600	Within treatment zone, southern cluster
IS47MW24	42	7	19	1 J	25	2	2	ND	16	1.8 J	2.9 J	ND	460	5,800	1,200	6,900	1,500	6,400	Within treatment zone, southern cluster
Maximum[1]	2,200	250	190	1 J	2,700	390	340	1	1,200	420	480	2.1	150,000	44,000	280,000	26,000	220,000	61,000	
Minimum[1]	ND	ND	ND	ND	25	ND	ND	ND	ND	ND	ND	ND	0.3	6	1,200	6,900	42	42	
Average[1,2]	526	74	66	0.65	778	111	96	0.65	462	97	146	2.1	47,257	20,176	60,820	13,660	33,359	17,905	

Soil Sample ID[4]	Depth Interval[4] (feet bgs)	Soil (µg/kg)												Notes
		Chlorinated Ethene COCs								Chlorinated Methane COCs				
		Baseline				6-Month Post-Injection				Baseline		6-Month Post-Injection		
		PCE	TCE	Cis-1,2-DCE	VC	PCE	TCE	Cis-1,2-DCE	VC	CT	CF	CT	CF	
IS47SB20 & IS47SB20A	8 - 9 & 6 - 9	50	4 J	ND	ND	ND	ND	ND	ND	19,000	2,800	43	40	In the vicinity of IS47MW19
	9 - 12 & 9 - 12	160	7	4 J	ND	ND	ND	ND	ND	100,000	3,900	25,000	3,800	
	12 - 15 & 12 - 15	ND	7	ND	ND	200 J	ND	ND	ND	9	6 J	12,000	11,000	
	15 - 17 & 15 - 18	ND	40	ND	ND	120 J	ND	ND	ND	6 J	5 J	2,700	6,100	
	Total	210	58	4	NA	320	NA	NA	NA	119,015	6,711	39,743	20,940	
IS47SB21 & IS47SB21A	8 - 9 & 7 - 10	ND	ND	ND	ND	3.2 J	ND	ND	ND	ND	ND	180	180	In the vicinity of IS47MW20
	9 - 12 & 10 - 13	31	39	8	ND	19	ND	ND	ND	23,000	1,400 J	98	850	
	12 - 15 & 13 - 16	3 J	4 J	ND	ND	20	ND	ND	ND	930	2,100	96	900	
	15 - 18 & 16 - 19	ND	9	ND	ND	5.1 J	0.79 J	1.4 J	ND	ND	6 J	43	490	
	Total	34	52	8	NA	47.3	0.79	1.4	NA	23,930	16,106	417	2,420	
IS47SB22 & IS47SB22A	8 - 9 & 7 - 10	ND	2 J	ND	ND	ND	ND	ND	ND	7	ND	29	71	In the vicinity of IS47MW21
	9 - 12 & 10 - 13	160	51	14	ND	ND	ND	ND	ND	58,000	8,100	17,000	12,000	
	12 - 15 & 13 - 16	4 J	3 J	ND	ND	6.2	ND	ND	ND	2,800	3,700	100	710	
	15 - 18 & 16 - 19	ND	6 J	ND	ND	3.9 J	ND	1.4 J	ND	4 J	5 J	31	240	
	Total	164	62	14	NA	10.1	NA	1.4	NA	86,011	11,805	17,160	13,020	
IS47SB23 & IS47SB23A	6 - 9 & 5 - 8	5 J	ND	ND	ND	ND	ND	ND	ND	73	56	8	33	In the vicinity of IS47MW22
	9 -12 & 8 - 11	790 J	24	22	ND	210	5.1 J	4.3 J	ND	4,200 J	3,900	2,800	2,700	
	12 - 15 & 11 - 14	17	5 J	17	ND	150 J	ND	ND	ND	ND	14	9,000	2,600	
	15 - 17 & 14 - 17	5 J	ND	ND	ND	260 J	ND	ND	ND	21	36	810	7,200	
	Total	817	29	29	NA	620	5.1	4.3	NA	4,006	4,006	12,618	12,533	
IS47SB24 & IS47SB24A	6 - 9 & 5 - 8	1,400 J	16	ND	ND	190 J	7	1.5 J	ND	260,000	660 J	170	230 J	In the vicinity of IS47MW23
	9 -12 & 8 - 11	ND	19	9	ND	550	11	8.5	ND	9,500	760	120	470	
	12 - 15 & 11 - 14	ND	ND	ND	ND	350	12	7.2	ND	5 J	ND	260 J	460	
	15 - 16 & 14 - 17	ND	ND	ND	ND	140	1.6 J	ND	ND	12	5 J	200	130 J	
	Total	1,400	35	9	NA	1,230	31.6	17.2	NA	269,517	1,425	750	1,290	
IS47SB25 & IS47SB25A	6 - 9 & 6 - 9	500	44	4 J	ND	3.5 J	ND	ND	ND	220 J	170 J	12	110	In the vicinity of IS47MW24
	9 - 12 & 9 -12	200	72	67	ND	97	2.5 J	3.3 J	ND	220	200 J	230	2,700	
	12 - 15 & 12 - 15	ND	ND	ND	ND	51	2.1 J	3.5 J	ND	11	15	400	1,300	
	15 - 16 & 15 - 18	4 J	ND	ND	ND	72	3.4 J	5.1 J	ND	28	21	6.2	2,300	
	Total	704	116	71	NA	223.5	8	11.9	NA	479	406	648.2	6,410	
Maximum[1]		1,400	116	71	ND	1,230	32	17	ND	269,517	16,106	39,743	20,940	
Minimum[1]		29	29	4	ND	10.1	ND	ND	ND	479	406	417	1,290	
Average[1,2,3]		59	59	24	NA	409	11	7	NA	83,826	6,743	11,889	9,436	

Notes:

[1] Maximum, minimum, and average taken from all eight monitoring wells within the treatment zone; excludes data from upgradient and downgradient wells

[2] Non-detect values were not used in the average calculation; however, they were noted as minimums for reference

[3] Soil averages were calculated from the total contaminant concentrations across the entire interval (i.e., sum of concentrations at each interval)

4 The "A" nomenclature refers to the sample ID for the 6-month post-injection sampling event.

Three wells were not sampled during the 2-month post event, IS47MW03, IS47MW19, and IS47MW20

SRGs for PCE, TCE, cis-1,2-DCE, and VC are 5 µg/L, 5 µg/L, 72 µg/L, and 2 µg/L, respectively

SRGs for CT and CF are 5 µg/L and 80 µg/L, respectively

NS - not sampled

ND - not detected

NA - not applicable

TABLE 4-5
Estimate of CT and PCE Mass Reduction in Soil and Groundwater for Baseline and 6-Month Post-Injection
Site 47 ISCO Pilot Study Technology Performance Evaluation
NSF-IH, Indian Head, Maryland

Site Characteristics		
Parameter	Value	Notes
Effective porosity	0.20	
Soil bulk density (kg/L)	1.52	Assumed based on sandy loam and silt loam (Jury, 1986)
TOC (mg/kg)	25,000	Baseline (max from IS47SB23)
foc (fraction of organic carbon)	0.0250	Calculated from TOC
TOC (mg/kg)	3,500	6-Mo Post-Injection (max from IS47SB24A-0517)
foc (fraction of organic carbon)	0.0035	Calculated from TOC

Properties of Contaminants							
Constituent	Koc (L/kg)	Kd (L/kg) = foc . Koc		MW (g/mol)*	Density (kg/L)*	Henry's Constant	Notes
		Baseline	6-Month Post-Injection				
CT	174	4.35	0.6	153.8227	1.62	0.754	Source: EPA soil screening guideline (http://www.epa.gov/superfund/health/conmedia/soil/pdfs/part_5.pdf)
PCE	272	6.80	1.0	165.8	1.62	0.754	

Groundwater Concentration Range (ug/L)			Plume Characteristics		Dissolved Phase			Adsorbed Phase				Subtotal Mass (lbs)		Total Mass (lbs)
			Volume (CF)	Volume (L)	Ave Cw (ug/L)	Vw (L)	Mass (lbs)	Vs (kg)	Cs - ug/kg Calculated (Cw x Kd) or Actual Soil Data		Mass (lbs)	Dissolved	Adsorbed	
CARBON TETRACHLORIDE (CT)														
Baseline														
150000	-	100000	10	287	125000	57	0	349	260,000	IS47SB24P-0609 - 4/16/09	0.2	13	196	210
100000	-	10000	13,023	368,759	55000	73,752	9	448,411	100,000	IS47SB20-0912 - 4/29/09	90.8			
10000	-	1000	63,104	1,786,853	5500	357,371	4	2,172,813	23,925		105.2			
6-Month Post-ISCO Injection														
150000	-	100000	9	245	125000	49	0	298	0	Concentration > 17,000 was not observed	0.0	7	33	40
100000	-	10000	6,324	179,059	55000	35,812	4	217,736	17,000	IS47SB22A-1013 - 7/7/10	7.5			
10000	-	1000	39,979	1,132,045	5500	226,409	3	1,376,567	9,000	IS47SB23A-1114 - 7/7/10	25.1			
Total Estimated CT Mass Reduction (lbs)												**6**	**164**	**170**
Total Estimated CT Mass Reduction (%)												**47%**	**83%**	**81%**
TETRACHLOROETHENE (PCE)														
Baseline														
	>	1000	280	7,915	1000	1,583	0.0	9,625	6,800		0.1	0.1	4.0	4.1
1000	-	500	1,691	47,888	750	9,578	0.0	58,232	5,100		0.6			
500	-	100	22,917	648,918	300	129,784	0.1	789,084	2,040		3.3			
6-Month Post-ISCO Injection														
	>	1000	180	5,109	1000	1,022	0.0	6,213	952		0.0	0.1	0.7	0.8
1000	-	500	2,443	69,170	750	13,834	0.0	84,111	714		0.1			
500	-	100	30,854	873,662	300	174,732	0.1	1,062,373	286		0.6			
Total Estimated PCE Mass Reduction (lbs)												**0.0**	**3.2**	**3.2**
Total Estimated PCE Mass Reduction (%)												**0%**	**81%**	**79%**

Assumptions/Notes:

1) Based on the isoconcentration plumes (Figures 4-7 and 4-9)
2) Volume was calculated using the EVS software.
3) NAPL, most likely constituting a majority of the contaminant mass, was not included in the calculations.

Denotes input parameter

* From http://en.wikipedia.org

TABLE 4-6

Baseline Geochemistry Indicator Concentrations in the Shallow Aquifer

Site 47 ISCO Pilot Study Technology Performance Evaluation

NSF-IH, Indian Head, Maryland

Monitoring Well	Geochemical Indicator Results							Indicated Redox Range	Notes
	Dissolved Oxygen (DO) (mg/L)	Nitrate (NO_{-3}) (mg/L)	Ferrous Iron (Fe^{+2}) (mg/L)	Sulfate (SO_4^{-2}) (mg/L)	Sulfide (S^{-2}) (mg/L)	Methane (CH_4) (mg/L)	ORP (mV)		
IS47MW01 (upgradient; site background well)	0.44	ND	4.2	19	1.6	0.45	-47	Iron reducing to sulfate reducing	
IS47MW03 (within northern treatment zone)	5.7	1.2	3.4	6.4	3.2	0.0048J	248	Aerobic to sulfate reducing	Data are inconclusive; indicate multiple redox states potentially present
IS47MW19 (within northern treatment zone)	3.1	1.2	18	24	ND	0.04	34	Nitrate reducing to iron reducing	DO data appear inaccurate. Elevated iron indicate significant iron reduction occurring
IS47MW20 (within northern treatment zone)	1.48	0.39	16	21	ND	0.003J	302	Aerobic to iron reducing	Elevated iron suggests significant iron reduction occurring
IS47MW21 (within northern treatment zone)	1.2	0.98	18	18	ND	0.052	87	Aerobic to iron reducing	Elevated iron suggests significant iron reduction occurring
IS47MW04 (within southern treatment zone)	2.5	ND	22	22	ND	0.15	-91	Aerobic to iron reducing	Elevated iron suggests significant iron reduction occurring
IS47MW22 (within southern treatment zone)	6.5	ND	34	22	ND	0.2	30	Aerobic to iron reducing	Elevated iron suggests significant iron reduction occurring
IS47MW23 (within southern treatment zone)	2.3	0.025J	6.3	19	ND	0.028	-80	Aerobic to iron reducing	Elevated iron suggests significant iron reduction occurring
IS47MW24 (within southern treatment zone)	2.5	ND	10	26	ND	0.016	15	Aerobic to iron reducing	Elevated iron suggests significant iron reduction occurring
IS47MW05 (downgradient)	2.7	ND	13	7.3	ND	1.4	-105	Aerobic to methanogenesis	Elevated iron suggests significant iron reduction occurring. Presence of methane suggests some methanogenesis occurring

Notes:

1. Results taken from the baseline sampling event conducted in October 2009.

ND - not detected

TABLE 4-7

2-Month Post-Injection Geochemistry Indicator Concentrations in the Shallow Aquifer

Site 47 ISCO Pilot Study Technology Performance Evaluation

NSF-IH, Indian Head, Maryland

Monitoring Well	Geochemical Indicator Results							Indicated Redox Range	Notes
	Dissolved Oxygen (DO) (mg/L)	Nitrate (NO_3^-) (mg/L)	Ferrous Iron (Fe^{+2}) (mg/L)	Sulfate (SO_4^{-2}) (mg/L)	Sulfide (S^{-2}) (mg/L)	Methane (CH_4) (mg/L)	ORP (mV)		
IS47MW01 (upgradient; site background well)	0.88	ND	NS	20	ND	NS	-5	Insufficient data	Baseline data indicated that iron- and sulfate-reducing conditions likely present
IS47MW03 (within northern treatment zone)	4.53	0.31	NS	23	3.4	NS	28	Insufficient data	Baseline data indicated aerobic to sulfate reducing. Data suggest a range of redox conditions may be present.
IS47MW19 (within northern treatment zone)	0.3	4.9	NS	15000	ND	NS	145	Insufficient data	Increase in sulfate from oxidant injection noted.
IS47MW20 (within northern treatment zone)	0.43	0.44	NS	3900	ND	NS	-77	Insufficient data	Increase in sulfate from oxidant injection noted.
IS47MW21 (within northern treatment zone)	4.07	0.6	NS	21000	ND	NS	28	Insufficient data	Increase in sulfate from oxidant injection noted.
IS47MW04 (within southern treatment zone)	0.8	0.023J	NS	3600	ND	NS	213	Insufficient data	Increase in sulfate from oxidant injection noted.
IS47MW22 (within southern treatment zone)	5.49	1.2	NS	10000	ND	NS	161	Insufficient data	Increase in sulfate from oxidant injection noted.
IS47MW23 (within southern treatment zone)	0.94	0.26	NS	5100	ND	NS	164	Insufficient data	Increase in sulfate from oxidant injection noted.
IS47MW24 (within southern treatment zone)	2.93	0.46	NS	2800	ND	NS	179	Insufficient data	Increase in sulfate from oxidant injection noted.
IS47MW05 (downgradient)	0.59	ND	NS	6.9	ND	NS	-52	Insufficient data	Baseline data indicated aerobic to methanogenic conditions present. 2 month data indicate lower DO.

Notes:

1. Results taken from the 2-month post-injection sampling event conducted in February 2010.

ND - not detected

TABLE 4-8

6-Month Post-Injection Geochemistry Indicator Concentrations in the Shallow Aquifer

Site 47 ISCO Pilot Study Technology Performance Evaluation

NSF-IH, Indian Head, Maryland

Monitoring Well	Geochemical Indicator Results							Indicated Redox Range	Notes
	Dissolved Oxygen (DO) (mg/L)	Nitrate (NO_{-3}) (mg/L)	Ferrous Iron (Fe^{+2}) (mg/L)	Sulfate (SO_4^{-2}) (mg/L)	Sulfide (S^{-2}) (mg/L)	Methane (CH_4) (mg/L)	ORP (mV)		
IS47MW01 (upgradient; site background well)	8.34	ND	4.2	29	0.98 J	0.32	-6	Aerobic to Sulfate reducing	Baseline data indicated that iron- and sulfate-reducing conditions likely present
IS47MW03 (within northern treatment zone)	2.69	0.72	0.4	25	3.5	0.0087 J	43	Aerobic to Sulfate reducing	Baseline data indicated that iron- and sulfate-reducing conditions likely present
IS47MW19 (within northern treatment zone)	2.32	ND	2	1900	ND	0.064	-43	Aerobic to iron-reducing	DO data inconsistent with ORP data
IS47MW20 (within northern treatment zone)	0.97	ND	1.4	2100	0.83 J	0.1	-92	Slightly aerobic to iron reducing	
IS47MW21 (within northern treatment zone)	2.3	ND	1.6	16000	ND	0.18	-148	Aerobic to iron-reducing	DO data inconsistent with ORP data
IS47MW04 (within southern treatment zone)	12.78	ND	90	3500	ND	0.14	160	Aerobic to iron-reducing	DO and Iron data are very high.
IS47MW22 (within southern treatment zone)	0.87	ND	58	5400	ND	0.087	182	Aerobic to iron-reducing	Iron data are very high.
IS47MW23 (within southern treatment zone)	0	0.044 J	15	8100	ND	0.55	-331	Iron reducing	ORP is very low
IS47MW24 (within southern treatment zone)	4.24	ND	2.4	1700	ND	0.023	190	Aerobic to iron reducing	
IS47MW05 (downgradient)	8.34	ND	16	7.5	ND	0.96	-60	Aerobic to iron reducing	DO data inconsistent with ORP data

Notes:

1. Results taken from the 6-month post-injection sampling event conducted in July 2010.

ND - not detected

TABLE 4-9
Metal Solubilization Evaluation for Groundwater
Site 47 ISCO Pilot Study Technology Performance Evaluation
NSF-IH, Indian Head, Maryland

Monitoring Well	Inorganic Constituent	Concentration (µg/L)			Evaluation Results
		Baseline	2-Month Post Injection	6-Month Post Injection	
IS47MW01 (Upgradient)	Aluminum	ND	21.3 J	ND	• Metal COCs[1] in addition to aluminum and chromium did not solubilize in the well upgradient of the pilot study area; metal concentrations remained stable throughout the monitoring period.
	Arsenic	25.2	14.5	16.2	
	Chromium	0.96 B	ND	0.42 J	
	Iron	4,190	2,880	3,840	
	Thallium	ND	1.7 J	ND	
	Vanadium	ND	0.84 J	ND	
IS47MW03 (Within Treatment Zone)	Aluminum	236 B	57,500	1,050	• Metal COCs[1] in addition to aluminum and chromium remained stable throughout the monitoring period or returned to nearly baseline conditions by the 6-month event.
	Arsenic	ND	18.8	2.2 J	
	Chromium	0.82 B	94.2	4.1 J	
	Iron	3,560	80,000	1,480	
	Thallium	ND	2.6 J	ND	
	Vanadium	ND	150	8.2 J	
IS47MW04 (Within Treatment Zone)	Aluminum	3,850	6,950	20,300	• Arsenic and thallium remained stable throughout the monitoring period. Aluminum, iron and vanadium displayed an overall increasing trend. Chromium displayed a temporary increase in concentration during the 2-month event, with a subsequent decrease by the 6-month event, however, concentrations were above background conditions.
	Arsenic	116	33.8	137	
	Chromium	4.1 B	77.9	46.4	
	Iron	33,200	58,600	71,000	
	Thallium	ND	ND	ND	
	Vanadium	98.4	54.3	274	
IS47MW05 (Downgradient)	Aluminum	ND	ND	ND	• Metal COCs[1] did not solubilize in the well downgradient of the pilot study area; metal concentrations remained stable throughout the monitoring period.
	Arsenic	ND	ND	2.2 J	
	Chromium	1.3 B	0.84 J	0.78 J	
	Iron	13,800	15,000	15,100	
	Thallium	ND	ND	ND	
	Vanadium	ND	0.54 J	ND	
IS47MW019 (Within Treatment Zone)	Aluminum	2,290	32,400	223,000	• Thallium remained stable throughout the monitoring period. Arsenic, chromium, and vanadium displayed a temporary increase in concentration during the 2-month event, but decreased by the 6-month event. Aluminum and iron have not stabilized or decreased, and concentrations continued to increase through the 6-month event.
	Arsenic	14	373	223	
	Iron	22,800	20,700	257,000	
	Thallium	ND	10 J	ND	
	Vanadium	16.3 B	1,820	1,380	
IS47MW20 (Within Treatment Zone)	Aluminum	1,890	29,600	4,400	• Thallium remained stable throughout the monitoring period. Aluminum, arsenic, chromium, and vanadium displayed a temporary increase in concentration during the 2-month event, but exhibited decreases by the 6-month event with arsenic reaching baseline conditions. Iron displayed a decreasing trend throughout the monitoring event.
	Arsenic	34.4	193	51.4	
	Chromium	3.9 B	329	42.5 J	
	Iron	14,800	5,200	1,990	
	Thallium	ND	4.9 J	ND	
	Vanadium	ND	721	130	
IS47MW21 (Within Treatment Zone)	Aluminum	3,560	12,400	1,390 J	• Thallium remained stable throughout the monitoring period. Aluminum, chromium, iron, and vanadium displayed a temporary increase in concentrations during the 2-month event, but decreased by the 6-month event with aluminum and iron decreasing to below baseline conditions. Arsenic had not stabilized or decreased, and concentrations continued to increase through the 6-month event.
	Arsenic	26.9	57.5	108	
	Chromium	3.6 B	1,110	153	
	Iron	13,600	29,900	4,810	
	Thallium	1.5 B	ND	ND	
	Vanadium	16.2 B	544	373	
IS47MW22 (Within Treatment Zone)	Aluminum	4,220	9,320	24,300	• Arsenic and thallium remained stable throughout the monitoring period. Vanadium displayed a decreasing trend throughout the monitoring event. Chromium displayed a temporary increase in concentrations during the 2-month event, but decreased by the 6-month event. Aluminum and iron had not stabilized or decreased, and concentrations continued to increase through the 6-month event.
	Arsenic	79.6	24 J	49.2	
	Chromium	5 B	867	162	
	Iron	35,000	5,120	41,700	
	Thallium	ND	ND	ND	
	Vanadium	77.4	20.8 J	12.6 J	
IS47MW23 (Within Treatment Zone)	Aluminum	113 B	8,710	8,960	• Iron and thallium remained stable throughout the monitoring period. Chromium displayed a temporary increase in concentrations during the 2-month event, but decreased by the 6-month event. Aluminum, arsenic and vanadium had not stabilized or decreased, and concentrations continued to increase through the 6-month event.
	Arsenic	20	16.3	51.6	
	Chromium	1.7 B	123	34.8 J	
	Iron	8,010	7,480	6,340	
	Thallium	ND	ND	ND	
	Vanadium	ND	254	812	
IS47MW24 (Within Treatment Zone)	Aluminum	412	5,040	857	• Iron and thallium remained stable throughout the monitoring period. Aluminum, chromium, and vanadium displayed a temporary increase in concentration during the 2-month event, but decreased by the 6-month event. Arsenic displayed a decreasing trend throughout the monitoring event.
	Arsenic	26.8	7.6 J	7 J	
	Chromium	1.3 B	216	21.4	
	Iron	9,970	803	5,340	
	Thallium	ND	ND	ND	
	Vanadium	ND	33.2	3.7 J	

Notes:
1. Site-specific COCs are arsenic, iron, thallium, and vanadium. Chromium and aluminum showed potential for solubilization during bench-scale testing and were included in detailed analysis.

TABLE 4-10
Metals Data for Soil
Site 47 ISCO Pilot Study Technology Performance Evaluation
NSF-IH, Indian Head, Maryland

Monitoring Well Location (Direct Push Soil Sample)	Inorganic Constituent	Concentration (mg/kg)		
		Baseline	2-Month Post Injection	6-Month Post Injection
IS47MW19 (Within Treatment Zone)	Aluminum	6,700	na	4,360
	Arsenic	2.4	na	1.9
	Chromium	15.6	na	11.8
	Iron	5,950	na	4,340
	Thallium	0.1 B	na	ND
	Vanadium	22.8	na	17.5
IS47MW20 (Within Treatment Zone)	Aluminum	3,690	na	3,290
	Arsenic	1.7	na	1.4
	Chromium	11.1	na	11.2
	Iron	3,660	na	2,920
	Thallium	ND	na	ND
	Vanadium	16.7	na	16
IS47MW21 (Within Treatment Zone)	Aluminum	4,280	na	3,530
	Arsenic	1.5	na	1.3
	Chromium	12	na	10.3
	Iron	3,890	na	2,870
	Thallium	0.26 B	na	ND
	Vanadium	18	na	17
IS47MW22 (Within Treatment Zone)	Aluminum	6,050	na	3,960
	Arsenic	2	na	1.5
	Chromium	14.3	na	11.9
	Iron	5,290	na	2,940
	Thallium	0.31 B	na	ND
	Vanadium	24.2	na	16.5
IS47MW23 (Within Treatment Zone)	Aluminum	10,700	na	5,330
	Arsenic	2.1	na	1.7
	Chromium	21.2	na	14.1
	Iron	6,430	na	3,190
	Thallium	0.49 B	na	ND
	Vanadium	27.1	na	18.3
IS47MW24 (Within Treatment Zone)	Aluminum	8,030	na	3,880
	Arsenic	1.4	na	1.6
	Chromium	14.7	na	12.4
	Iron	5,680	na	2,890
	Thallium	0.11 B	na	ND
	Vanadium	21.5	na	18.2

Notes:

1. Site-specific COCs are arsenic, iron, thallium, and vanadium. Chromium and aluminum showed potential for solubilization during bench-scale testing and were included in detailed analysis.

2. The purpose for conducting the metals analyses was for assessing the potential for metals to solubilized with changing environmental conditions during ISCO.

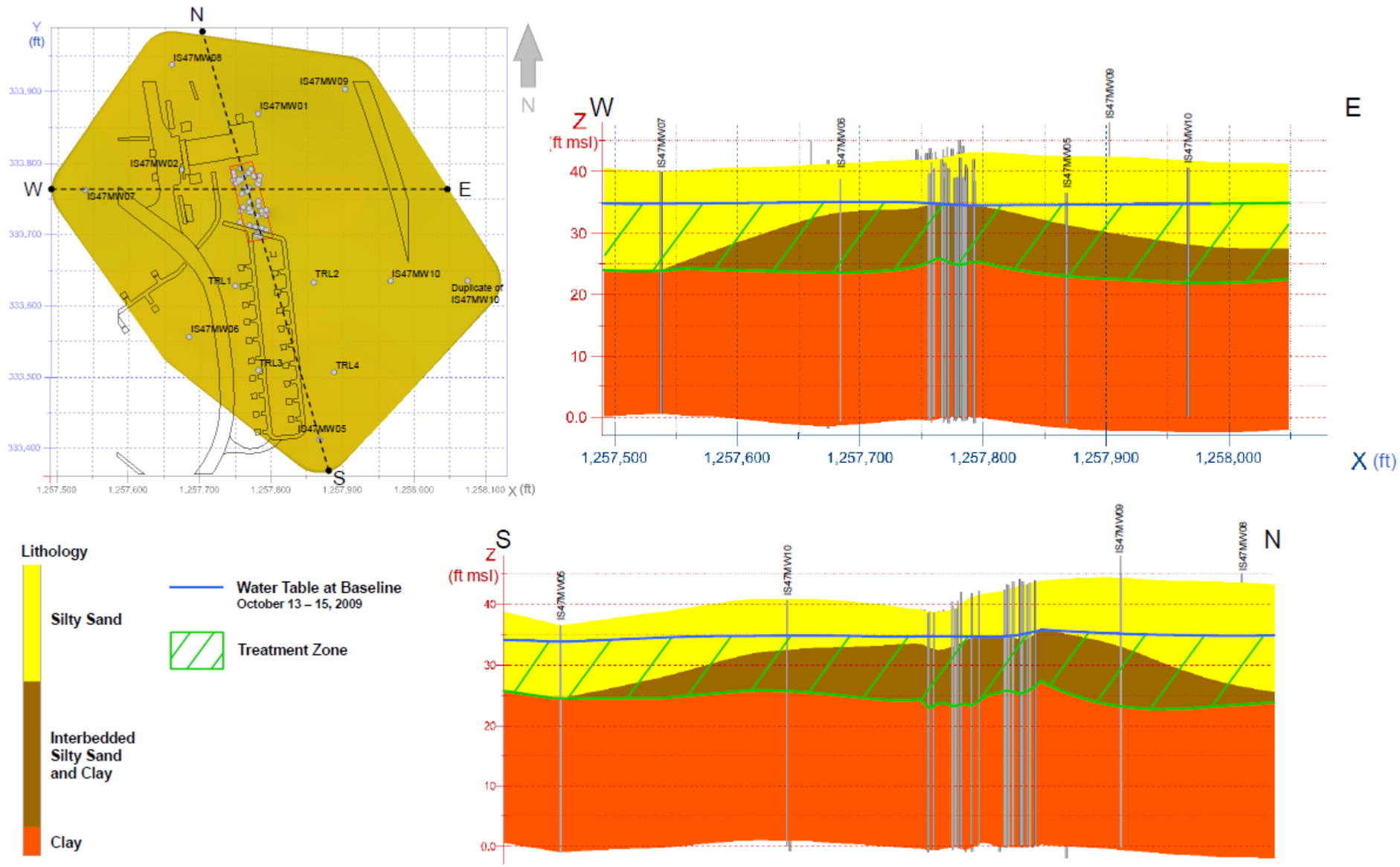

FIGURE 4-1
Geological Cross Sections
Site 47 ISCO Pilot Study Technology Performance Evaluation
NSF-IH, Indian Head, Maryland

Notes:

1. Water table shown based on measurements taken during the baseline event (October 13 through 15, 2009).
2. Treatment zone extends from the water table to the top of the clay unit.

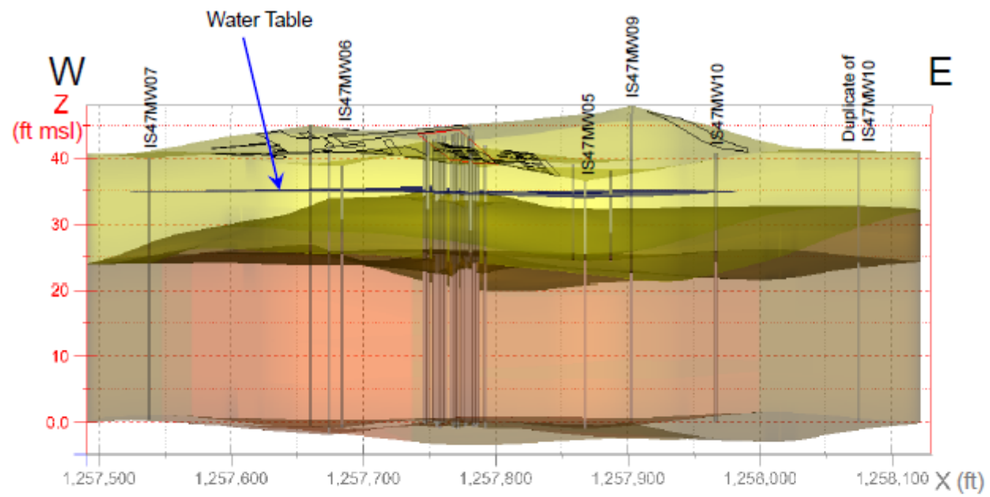

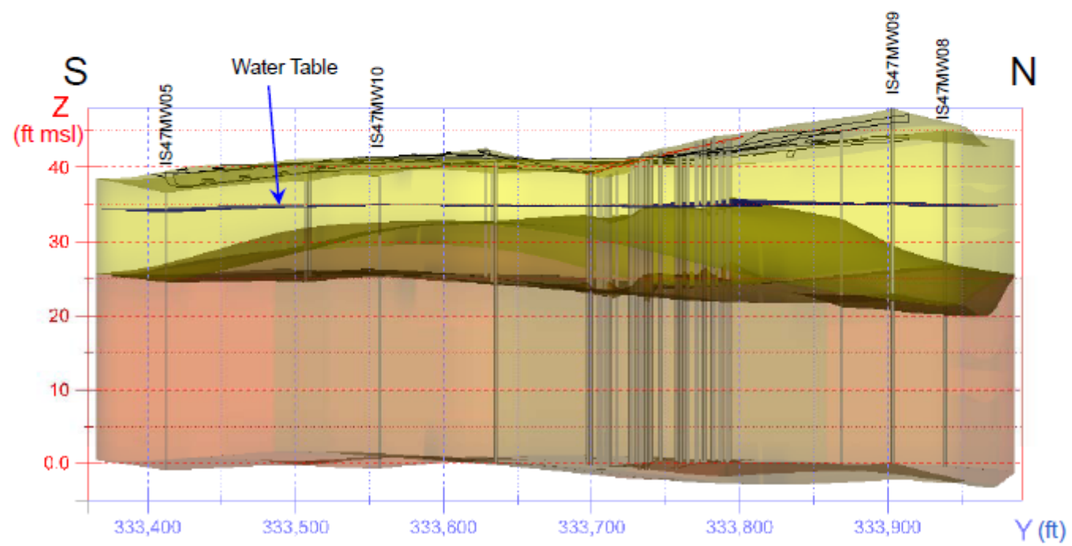

FIGURE 4-2
3-Dimensional Geological Views
Site 47 ISCO Pilot Study Technology Performance Evaluation
NSF-IH, Indian Head, Maryland

V:\USNAVFACENGCOM\359525INDIANHEAD\MAPFILES\314138_SITE47_ISCO_PILOT_STUDY_EVAL\FIGURE 4-3 - MONITORING SOIL AND GW DATA FOR CHLORINATED ETHENE COCS.MXD CELEFTHE 8/10/2011 12:50:58 PM

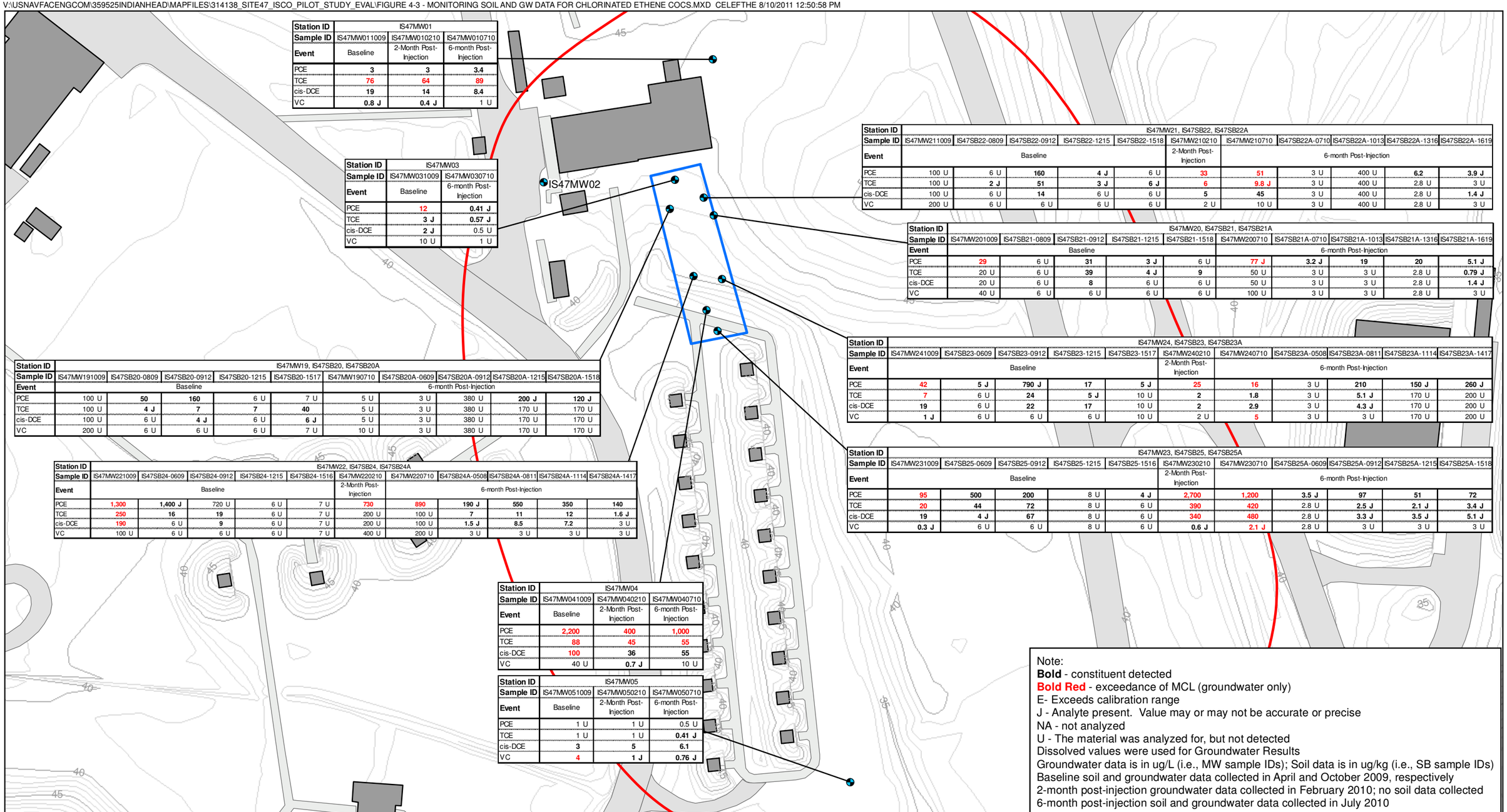

Station ID	IS47MW01		
Sample ID	IS47MW011009	IS47MW010210	IS47MW010710
Event	Baseline	2-Month Post-Injection	6-month Post-Injection
PCE	**3**	**3**	**3.4**
TCE	**76**	**64**	**89**
cis-DCE	**19**	**14**	**8.4**
VC	**0.8 J**	**0.4 J**	1 U

Station ID	IS47MW03	
Sample ID	IS47MW031009	IS47MW030710
Event	Baseline	6-month Post-Injection
PCE	**12**	**0.41 J**
TCE	**3 J**	**0.57 J**
cis-DCE	**2 J**	0.5 U
VC	10 U	1 U

Station ID	IS47MW21, IS47SB22, IS47SB22A										
Sample ID	IS47MW211009	IS47SB22-0809	IS47SB22-0912	IS47SB22-1215	IS47SB22-1518	IS47MW210210	IS47MW210710	IS47SB22A-0710	IS47SB22A-1013	IS47SB22A-1316	IS47SB22A-1619
Event	Baseline					2-Month Post-Injection	6-month Post-Injection				
PCE	100 U	6 U	**160**	**4 J**	6 U	**33**	**51**	3 U	400 U	**6.2**	**3.9 J**
TCE	100 U	**2 J**	**51**	**3 J**	**6 J**	**6**	**9.8 J**	3 U	400 U	2.8 U	3 U
cis-DCE	100 U	6 U	**14**	6 U	6 U	**5**	**45**	3 U	400 U	2.8 U	**1.4 J**
VC	200 U	6 U	6 U	6 U	6 U	2 U	10 U	3 U	400 U	2.8 U	3 U

Station ID	IS47MW20, IS47SB21, IS47SB21A									
Sample ID	IS47MW201009	IS47SB21-0809	IS47SB21-0912	IS47SB21-1215	IS47SB21-1518	IS47MW200710	IS47SB21A-0710	IS47SB21A-1013	IS47SB21A-1316	IS47SB21A-1619
Event	Baseline					6-month Post-Injection				
PCE	**29**	6 U	**31**	**3 J**	6 U	**77 J**	**3.2 J**	**19**	**20**	**5.1 J**
TCE	20 U	6 U	**39**	**4 J**	**9**	50 U	3 U	3 U	2.8 U	**0.79 J**
cis-DCE	20 U	6 U	**8**	6 U	6 U	50 U	3 U	3 U	2.8 U	**1.4 J**
VC	40 U	6 U	6 U	6 U	6 U	100 U	3 U	3 U	2.8 U	3 U

Station ID	IS47MW19, IS47SB20, IS47SB20A									
Sample ID	IS47MW191009	IS47SB20-0809	IS47SB20-0912	IS47SB20-1215	IS47SB20-1517	IS47MW190710	IS47SB20A-0609	IS47SB20A-0912	IS47SB20A-1215	IS47SB20A-1518
Event	Baseline					6-month Post-Injection				
PCE	100 U	**50**	**160**	6 U	7 U	5 U	3 U	380 U	**200 J**	**120 J**
TCE	100 U	**4 J**	**7**	**7**	**40**	5 U	3 U	380 U	170 U	170 U
cis-DCE	100 U	6 U	**4 J**	6 U	**6 J**	5 U	3 U	380 U	170 U	170 U
VC	200 U	6 U	6 U	6 U	7 U	10 U	3 U	380 U	170 U	170 U

Station ID	IS47MW24, IS47SB23, IS47SB23A										
Sample ID	IS47MW241009	IS47SB23-0609	IS47SB23-0912	IS47SB23-1215	IS47SB23-1517	IS47MW240210	IS47MW240710	IS47SB23A-0508	IS47SB23A-0811	IS47SB23A-1114	IS47SB23A-1417
Event	Baseline					2-Month Post-Injection	6-month Post-Injection				
PCE	**42**	**5 J**	**790 J**	**17**	**5 J**	**25**	**16**	3 U	**210**	**150 J**	**260 J**
TCE	**7**	6 U	**24**	**5 J**	10 U	**2**	**1.8**	3 U	**5.1 J**	170 U	200 U
cis-DCE	**19**	6 U	**22**	**17**	10 U	**2**	**2.9**	3 U	**4.3 J**	170 U	200 U
VC	**1 J**	6 U	6 U	6 U	10 U	2 U	**5**	3 U	3 U	170 U	200 U

Station ID	IS47MW22, IS47SB24, IS47SB24A										
Sample ID	IS47MW221009	IS47SB24-0609	IS47SB24-0912	IS47SB24-1215	IS47SB24-1516	IS47MW220210	IS47MW220710	IS47SB24A-0508	IS47SB24A-0811	IS47SB24A-1114	IS47SB24A-1417
Event	Baseline					2-Month Post-Injection	6-month Post-Injection				
PCE	**1,300**	**1,400 J**	720 U	6 U	7 U	**730**	**890**	**190 J**	**550**	**350**	**140**
TCE	**250**	**16**	**19**	6 U	7 U	200 U	100 U	**7**	**11**	**12**	**1.6 J**
cis-DCE	**190**	6 U	**9**	6 U	7 U	200 U	100 U	**1.5 J**	**8.5**	**7.2**	3 U
VC	100 U	6 U	6 U	6 U	7 U	400 U	200 U	3 U	3 U	3 U	3 U

Station ID	IS47MW23, IS47SB25, IS47SB25A										
Sample ID	IS47MW231009	IS47SB25-0609	IS47SB25-0912	IS47SB25-1215	IS47SB25-1516	IS47MW230210	IS47MW230710	IS47SB25A-0609	IS47SB25A-0912	IS47SB25A-1215	IS47SB25A-1518
Event	Baseline					2-Month Post-Injection	6-month Post-Injection				
PCE	**95**	**500**	**200**	8 U	**4 J**	**2,700**	**1,200**	**3.5 J**	**97**	**51**	**72**
TCE	**20**	**44**	**72**	8 U	6 U	**390**	**420**	2.8 U	**2.5 J**	**2.1 J**	**3.4 J**
cis-DCE	**19**	**4 J**	**67**	8 U	6 U	**340**	**480**	2.8 U	**3.3 J**	**3.5 J**	**5.1 J**
VC	**0.3 J**	6 U	6 U	8 U	6 U	**0.6 J**	**2.1 J**	2.8 U	3 U	3 U	3 U

Station ID	IS47MW04		
Sample ID	IS47MW041009	IS47MW040210	IS47MW040710
Event	Baseline	2-Month Post-Injection	6-month Post-Injection
PCE	**2,200**	**400**	**1,000**
TCE	**88**	**45**	**55**
cis-DCE	**100**	**36**	**55**
VC	40 U	**0.7 J**	10 U

Station ID	IS47MW05		
Sample ID	IS47MW051009	IS47MW050210	IS47MW050710
Event	Baseline	2-Month Post-Injection	6-month Post-Injection
PCE	1 U	1 U	0.5 U
TCE	1 U	1 U	**0.41 J**
cis-DCE	**3**	**5**	**6.1**
VC	**4**	**1 J**	**0.76 J**

Note:
Bold - constituent detected
Bold Red - exceedance of MCL (groundwater only)
E- Exceeds calibration range
J - Analyte present. Value may or may not be accurate or precise
NA - not analyzed
U - The material was analyzed for, but not detected
Dissolved values were used for Groundwater Results
Groundwater data is in ug/L (i.e., MW sample IDs); Soil data is in ug/kg (i.e., SB sample IDs)
Baseline soil and groundwater data collected in April and October 2009, respectively
2-month post-injection groundwater data collected in February 2010; no soil data collected
6-month post-injection soil and groundwater data collected in July 2010

Legend
- Existing Monitoring Well Location
- Elevation Contour Line (5 ft Interval)
- Elevation Contour Line (1 ft Interval)
- IR Site Boundary
- Pilot Study Area
- Building
- Road
- Sidewalk

N
W E
S

0 30 60 120
Feet

Figure 4-3
Performance Monitoring Soil and
Groundwater Data for Chlorinated Ethene COCs
Site 47 ISCO Pilot Study Technology
Performance Evaluation
NSF-IH, Indian Head, Maryland

CH2MHILL®

V:\USNAVFACENGCOM\359525INDIANHEAD\MAPFILES\314138_SITE47_ISCO_PILOT_STUDY_EVAL\FIGURE 4-4 - MONITORING SOIL AND GW DATA FOR CHLORINATED METHANE COCS.MXD CELEFTHE 8/10/2011 12:54:00 PM

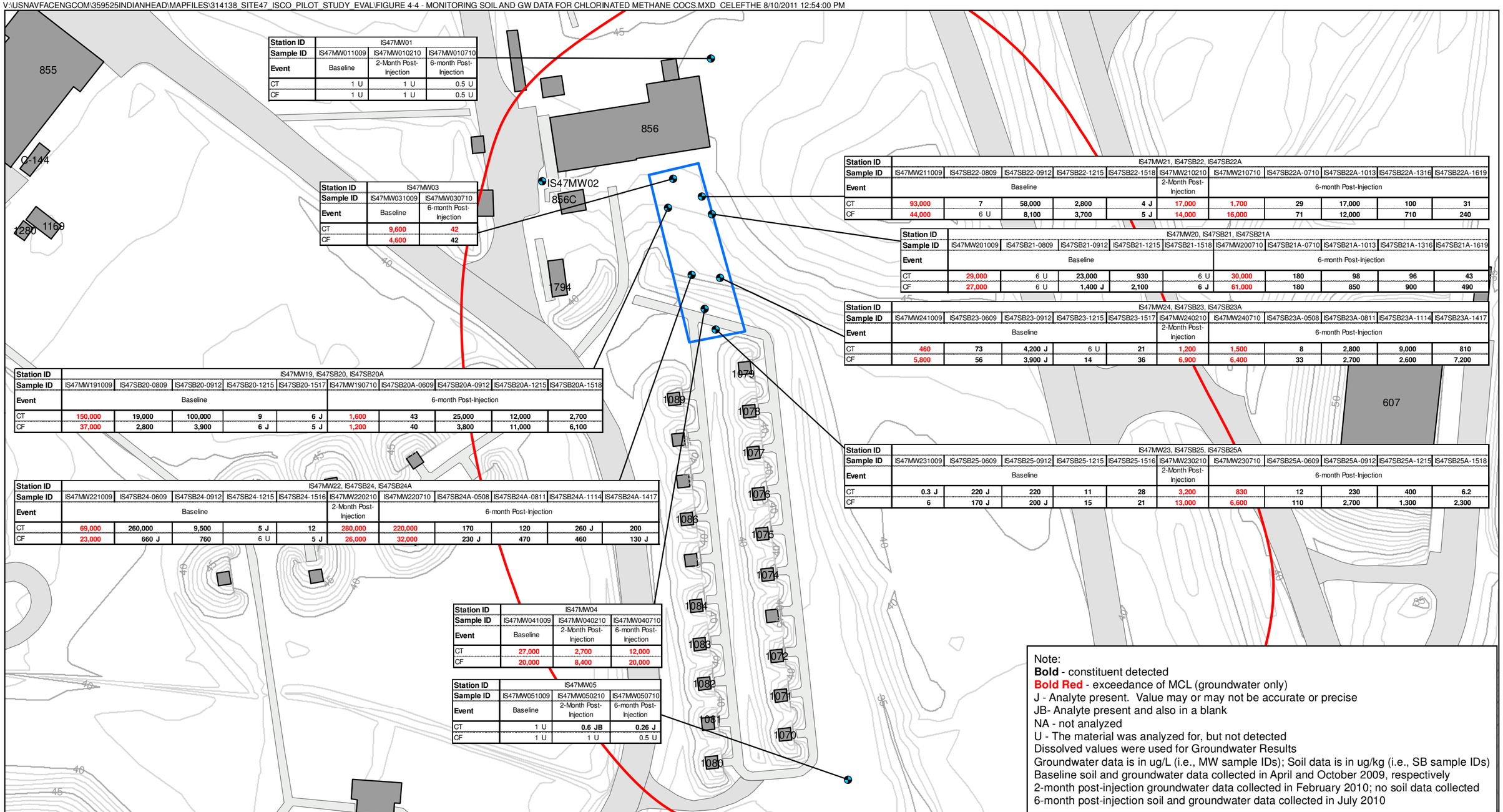

Station ID	IS47MW01		
Sample ID	IS47MW011009	IS47MW010210	IS47MW010710
Event	Baseline	2-Month Post-Injection	6-month Post-Injection
CT	1 U	1 U	0.5 U
CF	1 U	1 U	0.5 U

Station ID	IS47MW03	
Sample ID	IS47MW031009	IS47MW030710
Event	Baseline	6-month Post-Injection
CT	9,600	42
CF	4,600	42

Station ID	IS47MW21, IS47SB22, IS47SB22A										
Sample ID	IS47MW211009	IS47SB22-0809	IS47SB22-0912	IS47SB22-1215	IS47SB22-1518	IS47MW210210	IS47MW210710	IS47SB22A-0710	IS47SB22A-1013	IS47SB22A-1316	IS47SB22A-1619
Event	Baseline					2-Month Post-Injection	6-month Post-Injection				
CT	93,000	7	58,000	2,800	4 J	17,000	1,700	29	17,000	100	31
CF	44,000	6 U	8,100	3,700	5 J	14,000	16,000	71	12,000	710	240

Station ID	IS47MW20, IS47SB21, IS47SB21A									
Sample ID	IS47MW201009	IS47SB21-0809	IS47SB21-0912	IS47SB21-1215	IS47SB21-1518	IS47MW200710	IS47SB21A-0710	IS47SB21A-1013	IS47SB21A-1316	IS47SB21A-1619
Event	Baseline					6-month Post-Injection				
CT	29,000	6 U	23,000	930	6 U	30,000	180	98	96	43
CF	27,000	6 U	1,400 J	2,100	6 J	61,000	180	850	900	490

Station ID	IS47MW24, IS47SB23, IS47SB23A										
Sample ID	IS47MW241009	IS47SB23-0609	IS47SB23-0912	IS47SB23-1215	IS47SB23-1517	IS47MW240210	IS47MW240710	IS47SB23A-0508	IS47SB23A-0811	IS47SB23A-1114	IS47SB23A-1417
Event	Baseline					2-Month Post-Injection	6-month Post-Injection				
CT	460	73	4,200 J	6 U	21	1,200	1,500	8	2,800	9,000	810
CF	5,800	56	3,900 J	14	36	6,900	6,400	33	2,700	2,600	7,200

Station ID	IS47MW19, IS47SB20, IS47SB20A									
Sample ID	IS47MW191009	IS47SB20-0809	IS47SB20-0912	IS47SB20-1215	IS47SB20-1517	IS47MW190710	IS47SB20A-0609	IS47SB20A-0912	IS47SB20A-1215	IS47SB20A-1518
Event	Baseline					6-month Post-Injection				
CT	150,000	19,000	100,000	9	6 J	1,600	43	25,000	12,000	2,700
CF	37,000	2,800	3,900	6 J	5 J	1,200	40	3,800	11,000	6,100

Station ID	IS47MW23, IS47SB25, IS47SB25A										
Sample ID	IS47MW231009	IS47SB25-0609	IS47SB25-0912	IS47SB25-1215	IS47SB25-1516	IS47MW230210	IS47MW230710	IS47SB25A-0609	IS47SB25A-0912	IS47SB25A-1215	IS47SB25A-1518
Event	Baseline					2-Month Post-Injection	6-month Post-Injection				
CT	0.3 J	220 J	220	11	28	3,200	830	12	230	400	6.2
CF	6	170 J	200 J	15	21	13,000	6,600	110	2,700	1,300	2,300

Station ID	IS47MW22, IS47SB24, IS47SB24A										
Sample ID	IS47MW221009	IS47SB24-0609	IS47SB24-0912	IS47SB24-1215	IS47SB24-1516	IS47MW220210	IS47MW220710	IS47SB24A-0508	IS47SB24A-0811	IS47SB24A-1114	IS47SB24A-1417
Event	Baseline					2-Month Post-Injection	6-month Post-Injection				
CT	69,000	260,000	9,500	5 J	12	280,000	220,000	170	120	260 J	200
CF	23,000	660 J	760	6 U	5 J	26,000	32,000	230 J	470	460	130 J

Station ID	IS47MW04		
Sample ID	IS47MW041009	IS47MW040210	IS47MW040710
Event	Baseline	2-Month Post-Injection	6-month Post-Injection
CT	27,000	2,700	12,000
CF	20,000	8,400	20,000

Station ID	IS47MW05		
Sample ID	IS47MW051009	IS47MW050210	IS47MW050710
Event	Baseline	2-Month Post-Injection	6-month Post-Injection
CT	1 U	0.6 JB	0.26 J
CF	1 U	1 U	0.5 U

Note:
Bold - constituent detected
Bold Red - exceedance of MCL (groundwater only)
J - Analyte present. Value may or may not be accurate or precise
JB- Analyte present and also in a blank
NA - not analyzed
U - The material was analyzed for, but not detected
Dissolved values were used for Groundwater Results
Groundwater data is in ug/L (i.e., MW sample IDs); Soil data is in ug/kg (i.e., SB sample IDs)
Baseline soil and groundwater data collected in April and October 2009, respectively
2-month post-injection groundwater data collected in February 2010; no soil data collected
6-month post-injection soil and groundwater data collected in July 2010

Legend
- Existing Monitoring Well Location
- Elevation Contour Line (5 ft Interval)
- Elevation Contour Line (1 ft Interval)
- IR Site Boundary
- Pilot Study Area
- Building
- Road
- Sidewalk

N
W E
S

0 30 60 120
Feet

Figure 4-4
Performance Monitoring Soil and
Groundwater Data for Chlorinated Methane COCs
Site 47 ISCO Pilot Study Technology
Performance Evaluation
NSF-IH, Indian Head, Maryland

CH2MHILL

V:\USNAVFACENGCOM\359525INDIANHEAD\MAPFILES\314138_SITE47_ISCO_PILOT_STUDY_EVAL\FIGURE 4-5 - MONITORING SOIL AND GW DATA FOR METAL COCS.MXD CELEFTHE 8/10/2011 1:06:29 PM

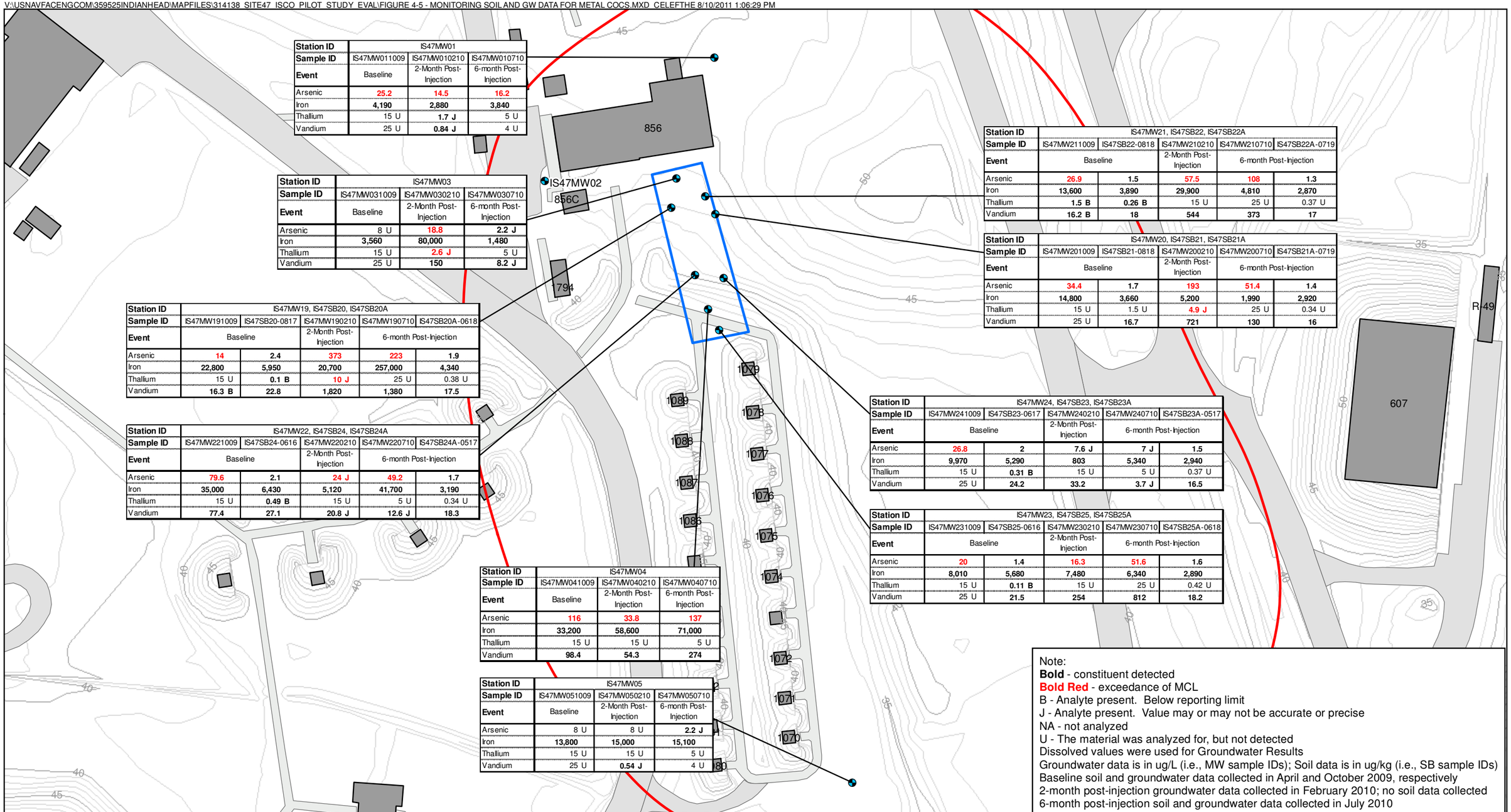

Station ID	IS47MW01		
Sample ID	IS47MW011009	IS47MW010210	IS47MW010710
Event	Baseline	2-Month Post-Injection	6-month Post-Injection
Arsenic	25.2	14.5	16.2
Iron	4,190	2,880	3,840
Thallium	15 U	1.7 J	5 U
Vandium	25 U	0.84 J	4 U

Station ID	IS47MW03		
Sample ID	IS47MW031009	IS47MW030210	IS47MW030710
Event	Baseline	2-Month Post-Injection	6-month Post-Injection
Arsenic	8 U	18.8	2.2 J
Iron	3,560	80,000	1,480
Thallium	15 U	2.6 J	5 U
Vandium	25 U	150	8.2 J

Station ID	IS47MW19, IS47SB20, IS47SB20A				
Sample ID	IS47MW191009	IS47SB20-0817	IS47MW190210	IS47MW190710	IS47SB20A-0618
Event	Baseline		2-Month Post-Injection	6-month Post-Injection	
Arsenic	14	2.4	373	223	1.9
Iron	22,800	5,950	20,700	257,000	4,340
Thallium	15 U	0.1 B	10 J	25 U	0.38 U
Vandium	16.3 B	22.8	1,820	1,380	17.5

Station ID	IS47MW22, IS47SB24, IS47SB24A				
Sample ID	IS47MW221009	IS47SB24-0616	IS47MW220210	IS47MW220710	IS47SB24A-0517
Event	Baseline		2-Month Post-Injection	6-month Post-Injection	
Arsenic	79.6	2.1	24 J	49.2	1.7
Iron	35,000	6,430	5,120	41,700	3,190
Thallium	15 U	0.49 B	15 U	5 U	0.34 U
Vandium	77.4	27.1	20.8 J	12.6 J	18.3

Station ID	IS47MW04		
Sample ID	IS47MW041009	IS47MW040210	IS47MW040710
Event	Baseline	2-Month Post-Injection	6-month Post-Injection
Arsenic	116	33.8	137
Iron	33,200	58,600	71,000
Thallium	15 U	15 U	5 U
Vandium	98.4	54.3	274

Station ID	IS47MW05		
Sample ID	IS47MW051009	IS47MW050210	IS47MW050710
Event	Baseline	2-Month Post-Injection	6-month Post-Injection
Arsenic	8 U	8 U	2.2 J
Iron	13,800	15,000	15,100
Thallium	15 U	15 U	5 U
Vandium	25 U	0.54 J	4 U

Station ID	IS47MW21, IS47SB22, IS47SB22A				
Sample ID	IS47MW211009	IS47SB22-0818	IS47MW210210	IS47MW210710	IS47SB22A-0719
Event	Baseline		2-Month Post-Injection	6-month Post-Injection	
Arsenic	26.9	1.5	57.5	108	1.3
Iron	13,600	3,890	29,900	4,810	2,870
Thallium	1.5 B	0.26 B	15 U	25 U	0.37 U
Vandium	16.2 B	18	544	373	17

Station ID	IS47MW20, IS47SB21, IS47SB21A				
Sample ID	IS47MW201009	IS47SB21-0818	IS47MW200210	IS47MW200710	IS47SB21A-0719
Event	Baseline		2-Month Post-Injection	6-month Post-Injection	
Arsenic	34.4	1.7	193	51.4	1.4
Iron	14,800	3,660	5,200	1,990	2,920
Thallium	15 U	1.5 U	4.9 J	25 U	0.34 U
Vandium	25 U	16.7	721	130	16

Station ID	IS47MW24, IS47SB23, IS47SB23A				
Sample ID	IS47MW241009	IS47SB23-0617	IS47MW240210	IS47MW240710	IS47SB23A-0517
Event	Baseline		2-Month Post-Injection	6-month Post-Injection	
Arsenic	26.8	2	7.6 J	7 J	1.5
Iron	9,970	5,290	803	5,340	2,940
Thallium	15 U	0.31 B	15 U	5 U	0.37 U
Vandium	25 U	24.2	33.2	3.7 J	16.5

Station ID	IS47MW23, IS47SB25, IS47SB25A				
Sample ID	IS47MW231009	IS47SB25-0616	IS47MW230210	IS47MW230710	IS47SB25A-0618
Event	Baseline		2-Month Post-Injection	6-month Post-Injection	
Arsenic	20	1.4	16.3	51.6	1.6
Iron	8,010	5,680	7,480	6,340	2,890
Thallium	15 U	0.11 B	15 U	25 U	0.42 U
Vandium	25 U	21.5	254	812	18.2

Note:
Bold - constituent detected
Bold Red - exceedance of MCL
B - Analyte present. Below reporting limit
J - Analyte present. Value may or may not be accurate or precise
NA - not analyzed
U - The material was analyzed for, but not detected
Dissolved values were used for Groundwater Results
Groundwater data is in ug/L (i.e., MW sample IDs); Soil data is in ug/kg (i.e., SB sample IDs)
Baseline soil and groundwater data collected in April and October 2009, respectively
2-month post-injection groundwater data collected in February 2010; no soil data collected
6-month post-injection soil and groundwater data collected in July 2010

Legend
- Existing Monitoring Well Location
- Elevation Contour Line (5 ft Interval)
- Elevation Contour Line (1 ft Interval)
- IR Site Boundary
- Pilot Study Area
- Building
- Road
- Sidewalk

N
W E
S

0 30 60 120
Feet

Figure 4-5
Performance Monitoring Soil and Groundwater Data for Metal COCs
Site 47 ISCO Pilot Study Technology Performance Evaluation
NSF-IH, Indian Head, Maryland

CH2MHILL

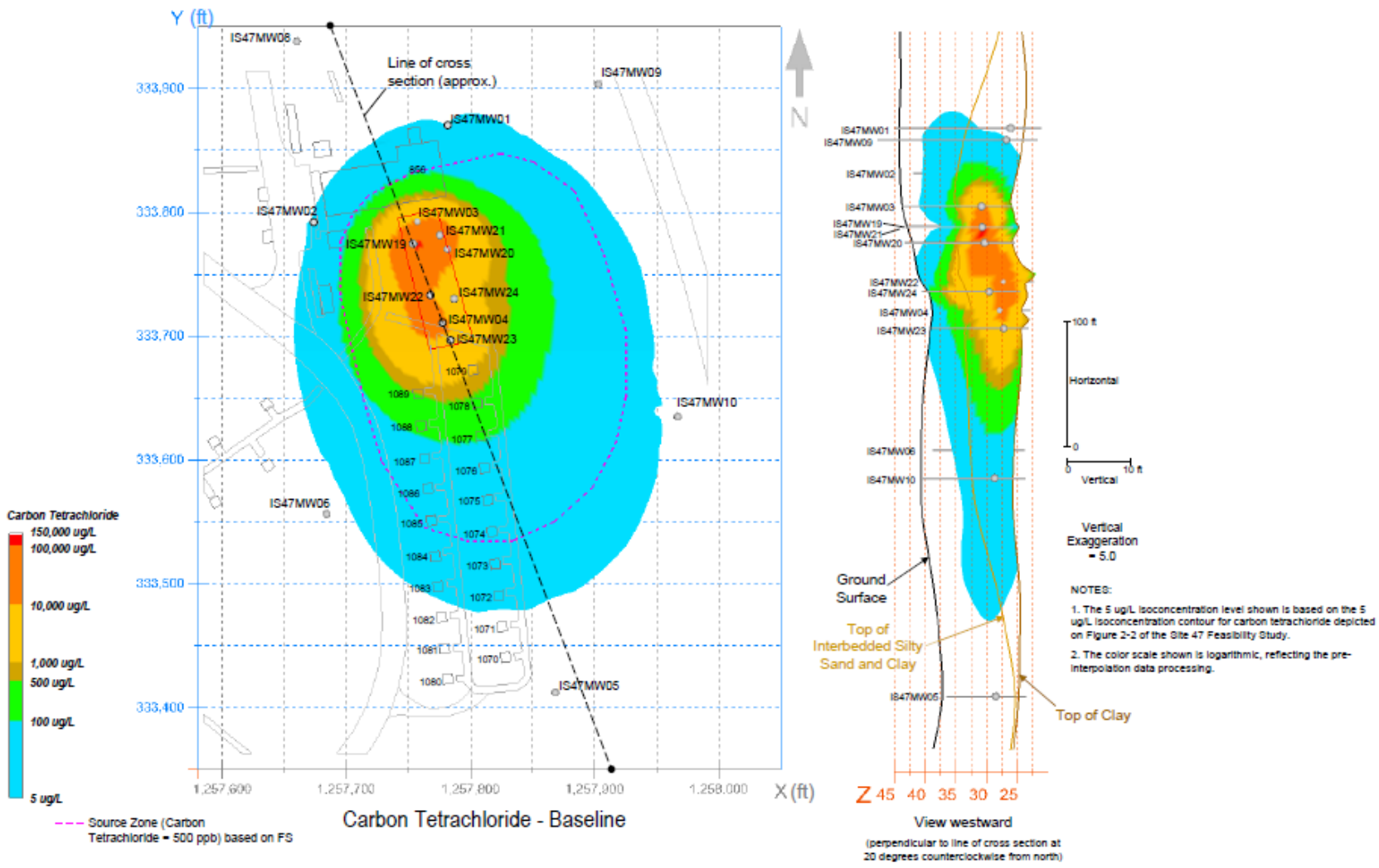

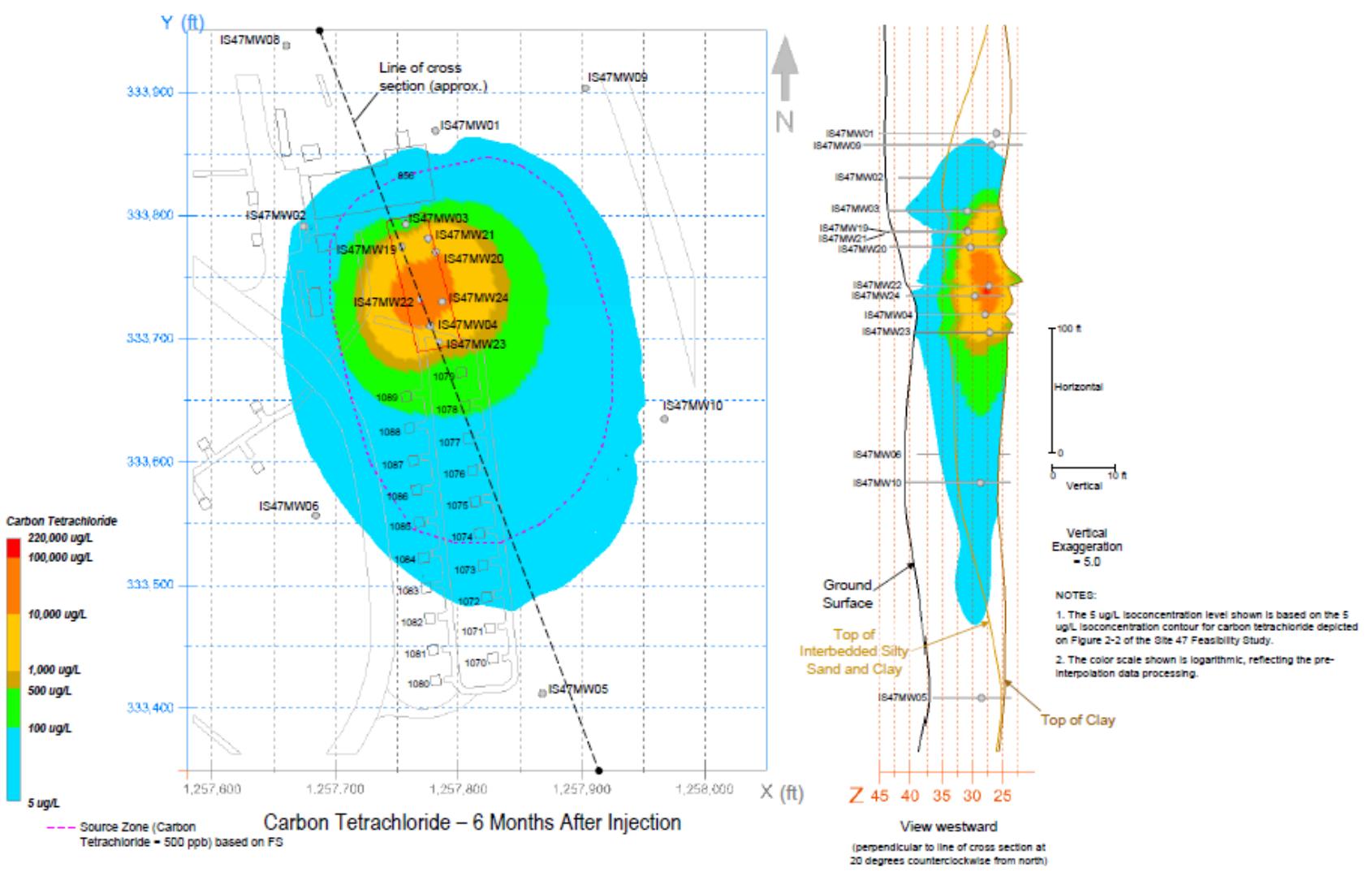

FIGURE 4-6
2-Dimensional CT Plumes – Baseline and 6-Month Post Injection
Site 47 ISCO Pilot Study Technology Performance Evaluation
NSF-IH, Indian Head, Maryland

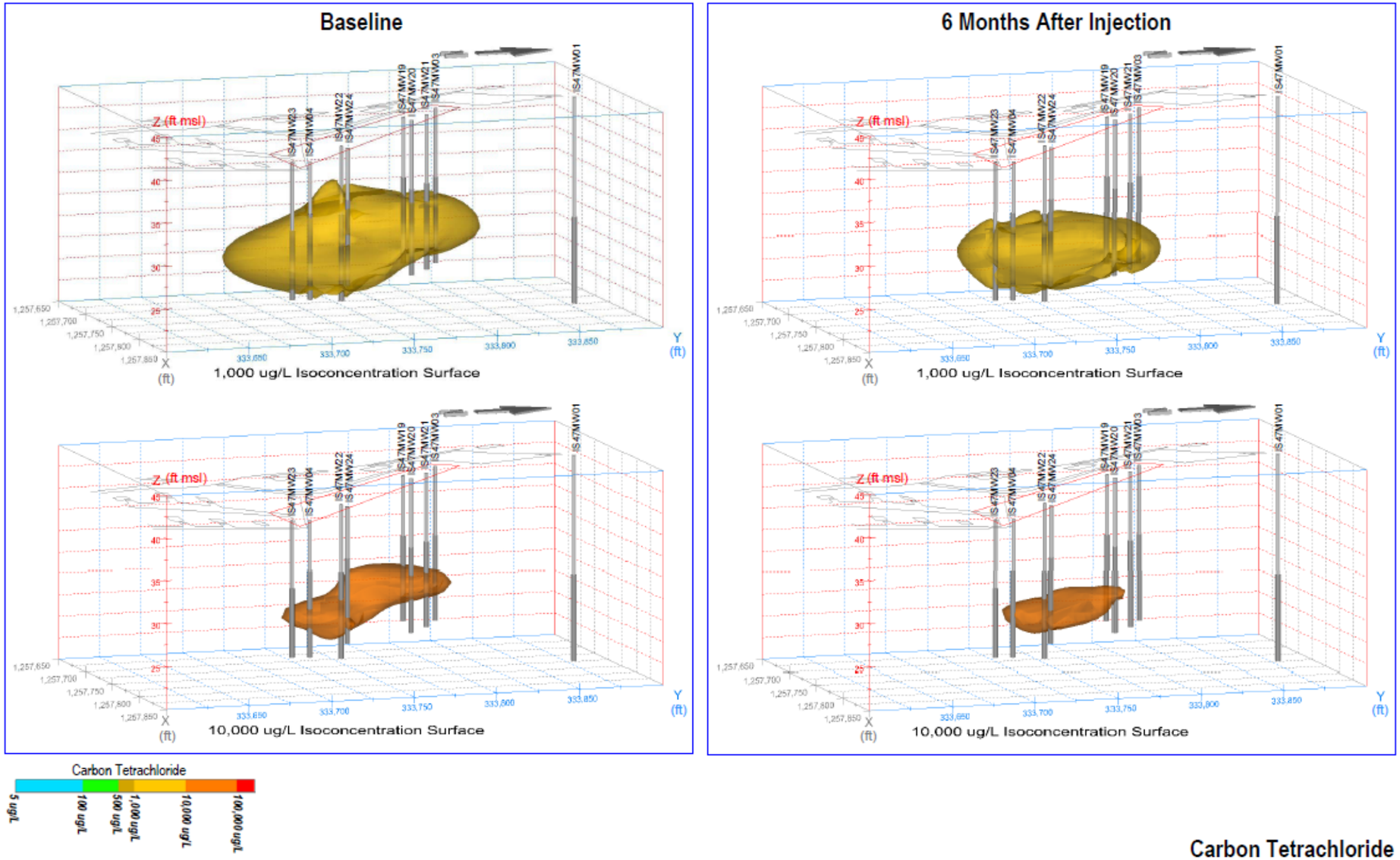

FIGURE 4-7
3-Dimensional CT Plumes – Baseline and 6-Month Post Injection
Site 47 ISCO Pilot Study Technology Performance Evaluation
NSF-IH, Indian Head, Maryland

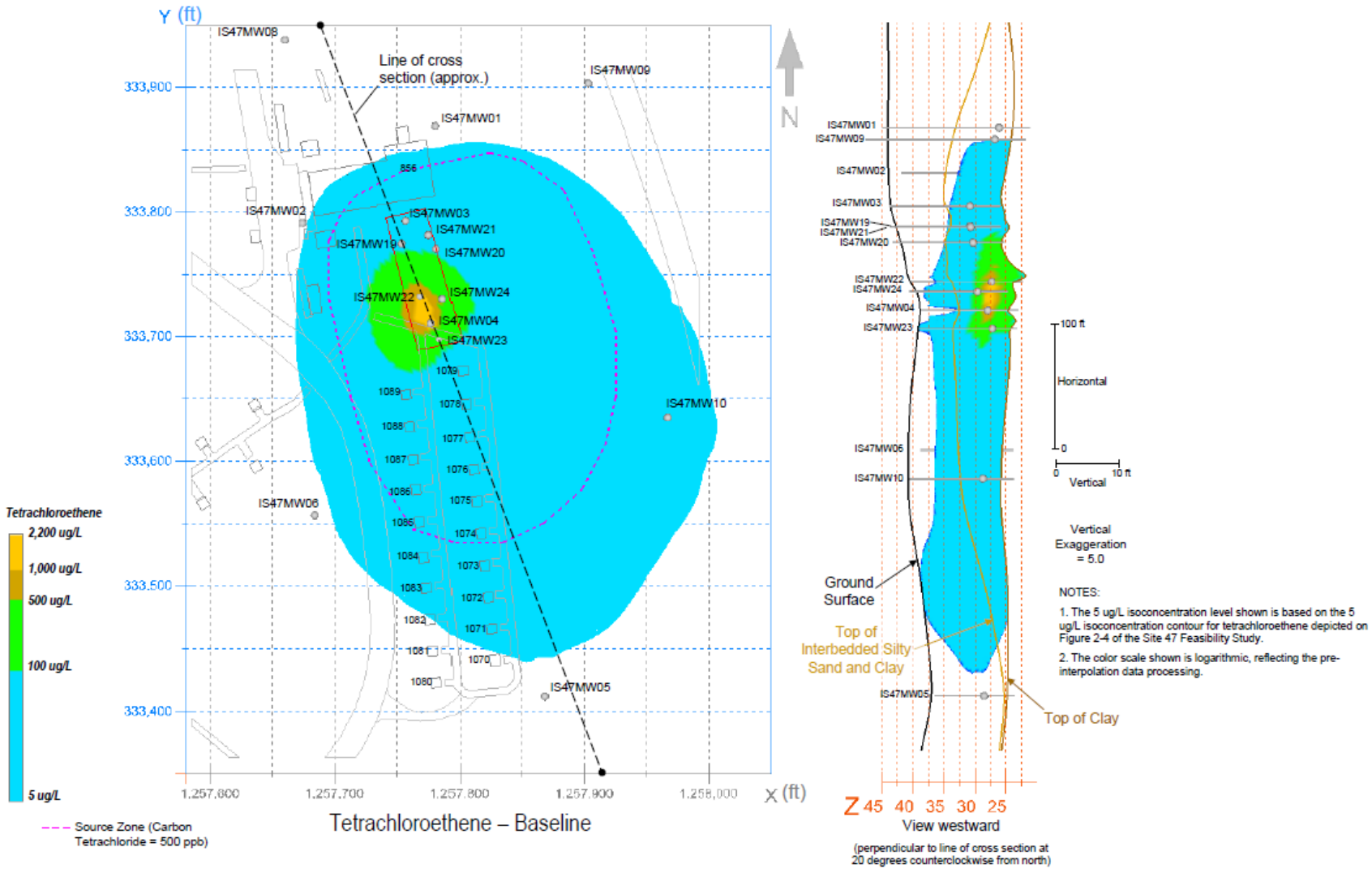

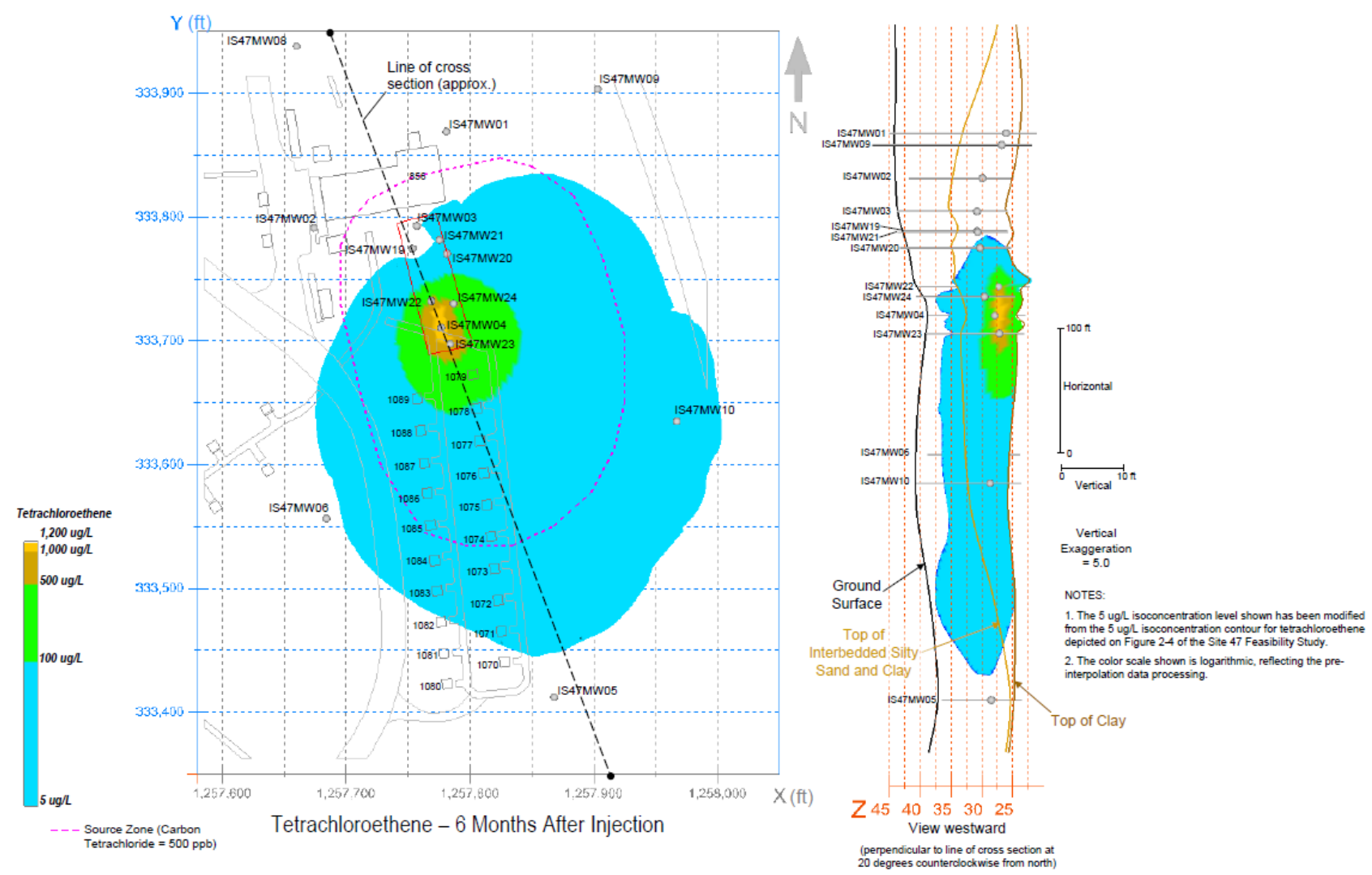

FIGURE 4-8
2-Dimensional PCE Plumes – Baseline and 6-Month Post Injection
Site 47 ISCO Pilot Study Technology Performance Evaluation
NSF-IH, Indian Head, Maryland

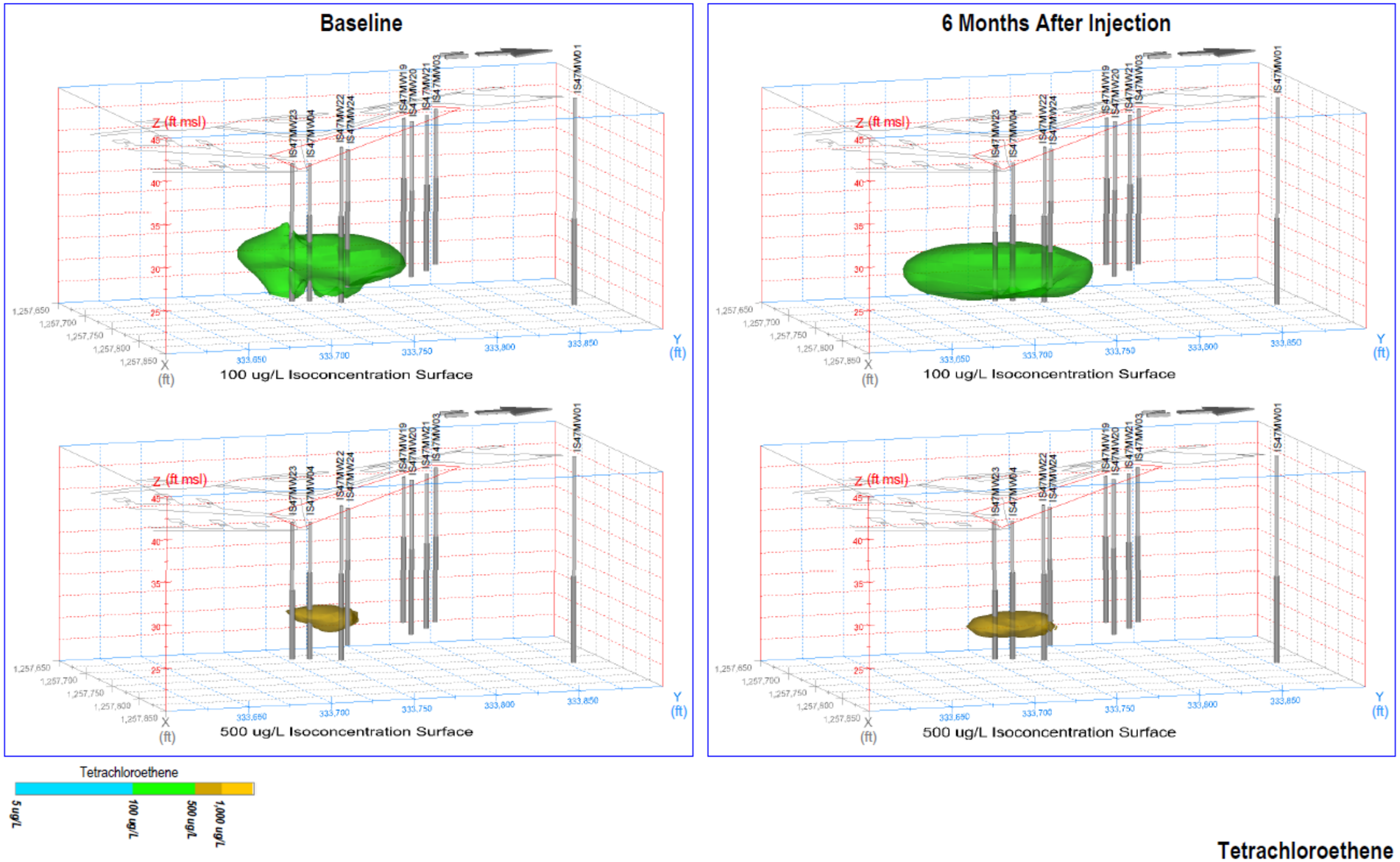

Tetrachloroethene

FIGURE 4-9
3-Dimensional PCE Plumes – Baseline and 6-Month Post Injection
Site 47 ISCO Pilot Study Technology Performance Evaluation
NSF-IH, Indian Head, Maryland

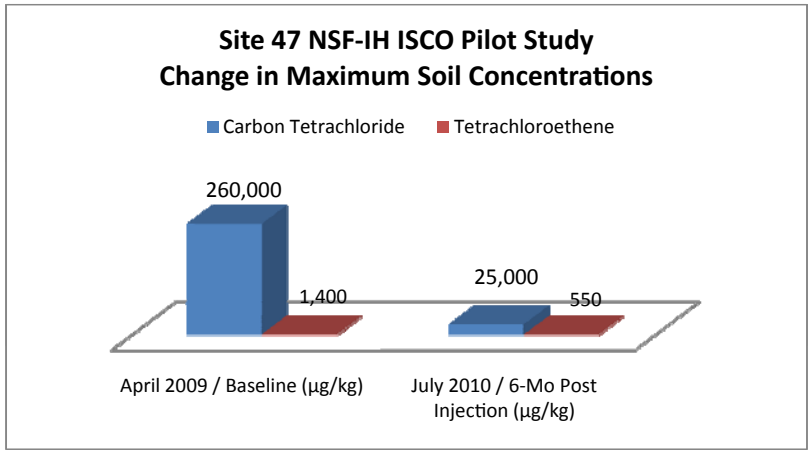

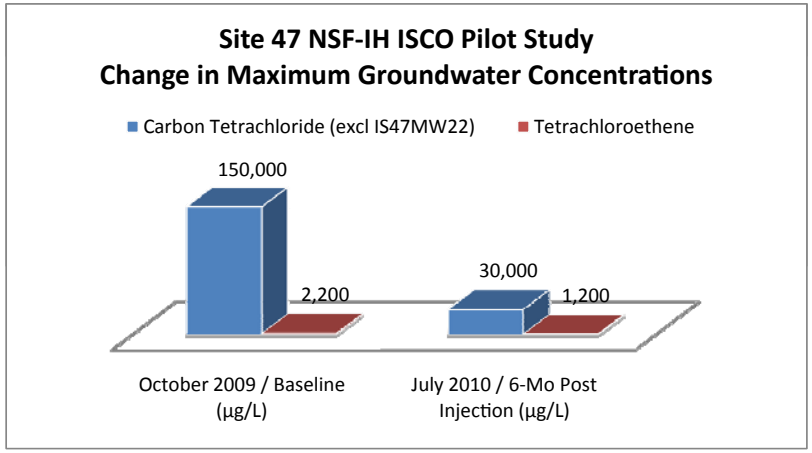

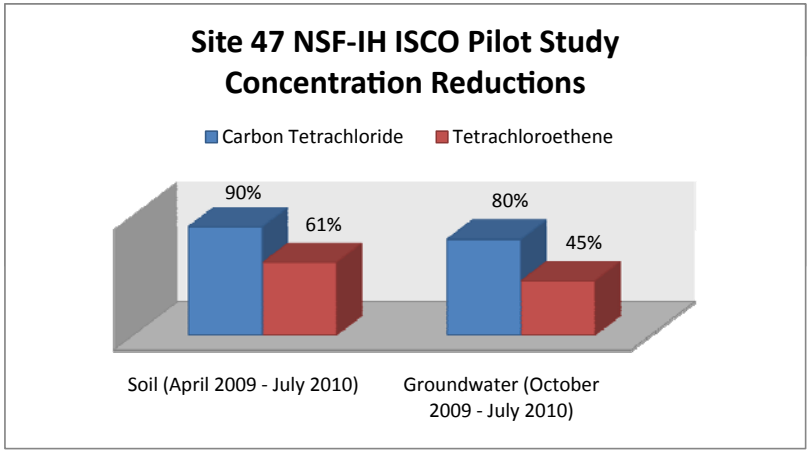

Figure 4-10
Change in Maximum Concentrations
Site 47 ISCO Pilot Study Technology Performance Evaluation
NSF-IH, Indian Head, Maryland

SECTION 5

Conclusions and Recommendations

5.1 Conclusions

This section presents key findings of the pilot study and lessons learned from performing the pilot study.

5.1.1 Findings

Key findings of the pilot study results are as follows:

- A considerable amount of contaminant mass was destroyed, as indicated by the soil and groundwater results. However, COC concentrations did not decline uniformly throughout the treatment zone. For example, concentrations of chlorinated ethene and ethanes in groundwater increased in well IS47MW23, located on the downgradient edge of the pilot study area, while the concentration of CT decreased in the three wells in the upgradient portion of the study area. These results may be attributed to some migration of desorbed COCs downgradient or physical displacement of a portion of the plume by the injectate volume.
- Partial oxidation of soil TOC can lead to desorption of COCs that are sorbed to the organic matter. This can lead to localized increases in dissolved phase COC concentrations. The influx in the dissolved phase COCs can also be attributed to residual DNAPL dissolution.
- The data appear to support that a variety of potential treatment mechanisms, primarily transformation of CT and oxidation of PCE, may have contributed in the treatment of CT and could be appropriately leveraged in a full-scale application.
- Decreases in chlorinated ethenes and methanes were observed in shallow sandy soil (5 to 12 feet bgs), while increases occurred in deeper soils, which tend to contain some silty clays mixed in with the sand (12 to 18 feet bgs). The shift may be due to preferential desorption in the sandier portions of the soil initially, and adsorption occurring post-ISCO application in the lower sand unit containing a higher fraction of fines.
- Increase in the carbon disulfide concentrations, specifically in well IS47MW22 between 2 and 6 months post-injection, could indicate that CT underwent an alternative biodegradation pathway to carbon disulfide (Biteman et al., 2010).
- Alkaline-activated persulfate was generally effective in treating CT and PCE in both soil and groundwater. Based on pre- and post-treatment soil and groundwater concentrations (exclusive of residual NAPL mass) within the treatment zone, up to 81percent CT and 79 percent PCE total mass removal was achieved within the treatment zone. However, there may be DNAPL mass present within the treatment zone that is not accounted for in this estimate, so this estimate likely represents an upper bound on the percent of mass removed.

- Changes in redox conditions induced by alkaline-activated persulfate are temporary in nature. The 6-month post-injection results indicated that redox conditions returned to near-baseline conditions. Natural attenuation parameters did not indicate an adverse impact from alkaline-activated persulfate with respect to biodegradation components of natural attenuation.
- Metals solubilization appeared to be temporary, as indicated by the 6-month post-injection results. The dissolved metals concentrations showed that most were at baseline or returning towards baseline concentrations after 6 months.
- EC profiles and persulfate concentrations observed in monitoring wells indicated that the oxidant was distributed as far as 13 to 18 feet from the injection points. This distance exceeded the design ROI of 12 feet, suggesting that the actual effective porosity of the injection zone may be lower than assumed for the pilot study. This suggests that lower injectate volumes could be used in the full-scale implementation to achieve a 12-foot ROI.
- Injection rates in the pilot study area ranged from <0.5 to 3.5 gpm, with an average of 2.4 gpm. These site-specific rates should be incorporated into future design parameters.
- 101 percent of the designed ISCO reagents by mass and 90 percent of the designed solution volume were delivered to the subsurface during the pilot study.
- The compositing method for soil TOC analysis reduces the data usability to some degree because it reduces the ability to capture the TOC variation in the soil column.

5.1.2 Challenges, Lessons Learned, and Success Stories

- Because of extensive subsurface utilities at the site, air knifing was a necessity to clear each well location to a minimum depth of 5 feet bgs before well construction.
- Drilling and other intrusive activities, including oxidant injection, could be performed with either approval from multiple Base commands and operations or shutdown of the explosive research and storage activities. Because shutdown of Base mission activities is not feasible, close coordination with the Base staff and its willingness to work with CH2M HILL was required to effectively plan and implement the pilot study. This collaboration with the Base was necessary for the successful completion of the pilot study without disruption to Base activities except when a water line was hit during installation of a monitoring well; the water line was repaired by the Navy. Design of the full-scale remedy should consider optimizing and minimizing time in the field, specifically subsurface intrusive activities. Implementation of the full-scale remedy should include close collaboration with Base personnel to ensure its success.
- Partnering with the regulators and the Base tenants is extremely effective in reducing the amount of time involved in accomplishing field work.
- The full-scale remedy required that an additional delivery system, consisting of wells, be installed. These wells must be installed with methodology and in a configuration that minimize drilling activities.

5.2 Recommendations

Alkaline-activated persulfate has been demonstrated to be effective in treating CT and PCE, and is compatible with the current site use. Due to the logistics in obtaining a work permit, the occurrence of mission-critical activities at the site, and the presence of extensive utilities, future subsurface delivery of alkaline-activated persulfate must minimize the occurrence and duration of drilling and injection activities. As a result, future alkaline-activated persulfate delivery via an expanded vertical injection wells configuration may not be feasible. Full-scale alkaline-activated persulfate application at Site 47 could potentially be achieved by using the existing vertical injection wells, new horizontal wells, or some combination thereof to minimize the surface footprints and duration of drilling. A persulfate recirculation system may potentially provide an optimized ROI and shorten the duration of the injection and treatment activities; the exact injection scheme will be developed during the design phase. A combination of alkaline-activated persulfate treatment, followed by monitored natural attenuation of residual contamination, is a viable full-scale remedy at Site 47.

5.3 Conceptual Approach for Full-Scale Remedy

Alternative 2, as presented in the FS report, has been revised based on the logistical challenges (such as site accessibility) encountered during the pilot study and uncertainty associated with the size of the residual DNAPL source area. The revision to Alternative 2 focuses on the delivery approach of alkaline-activated persulfate into the subsurface to minimize site access and disruption to Base mission activities. Figure 5-1 shows the conceptual design of the revised delivery method for Alternative 2. The components of the conceptual approach of this alternative are as follows:

- To optimize the use of the existing injection wells and accommodate the current site access and layout, the full-scale remedy will be implemented in two phases. Phase I will consist of treatment in the northern portion of the source area. Phase II will consist of treatment in the southern portion of the source area; this phase will or will not be implemented based on the results of Phase I.
- Apply alkaline-activated persulfate as the ISCO reagent in the area where the CT concentration is ≥ 500 µg/L using a combination of existing vertical wells supplemented with new horizontal wells as needed Two ISCO injection/recirculation events are assumed in order to achieve a CT concentration ≤ 500 µg/L.
- Conduct ISCO performance sampling events. For each recirculation event, baseline sampling will be performed as well as 2- and 6-month post-recirculation events. At each sampling event, groundwater samples would be collected from 22 monitoring wells (14 existing and 8 new) and analyzed for the COCs, residual persulfate, TOC, sulfate, ferrous iron, and field parameters[3].
- Perform long-term groundwater monitoring using 22 monitoring wells for an assumed duration of up to 52 years after completing the performance sampling. The cost estimate assumed that the groundwater monitoring would be conducted on a quarterly basis

[3] DO, pH, temperature, specific conductance, and ORP

from year 1 to year 3, and annually from year 4 to year 52. The analytical requirements for each monitoring event would include the COCs, TOC, microbial gene testing (such as for VC reductase), geochemical parameters[4] for a selection of six wells during the initial 6 years of monitoring, and field parameters[5].

- Conduct 5-year reviews for up to 52 years.
- Implement and enforce institutional controls in the form of land and groundwater use restrictions, such as prohibiting the potable use of groundwater. Also, any future building construction would require an evaluation of potential human health risks. Institutional controls will be maintained until contamination levels allow for unlimited use and unrestricted exposure.

The cost estimate for revised Alternative 2 has the accuracy range of an FS-level estimate of -30 percent to +50 percent. The cost was based on the conceptual-level design parameters and assumptions that will be refined or modified during the remedial design phase. Appendix F details the conceptual ISCO design assumptions and cost estimate of the revised alternative. The cost is summarized below:

Alternative 2 - Estimated Cost	
2011 Capital Cost	$2.71 million
2011 Total Operation & Maintenance Cost	$3.46 million
Present-Worth Lifetime Operation & Maintenance Cost	$1.46 million
Total Present-Worth Cost	$4.16 million
Projected Time Frame to Achieve Remedial Action Objectives	52 years

[4] Chloride, ferrous and total iron, nitrate/nitrite, sulfate/sulfide, and MEE

[5] DO pH, temperature, specific conductance, and ORP

VBO \\NORTHEND\PROJ\USNAVFACENGCOM\359525INDIANHEAD\MAPFILES\314138_SITE47_ISCO_PILOT_STUDY_EVAL\FIGURE 5-1 - CONCEPTUAL DESIGN OF REMEDIATION ALTERNATIVE 2.MXD CELEFTHE 8/10/2011 3:03:32 PM

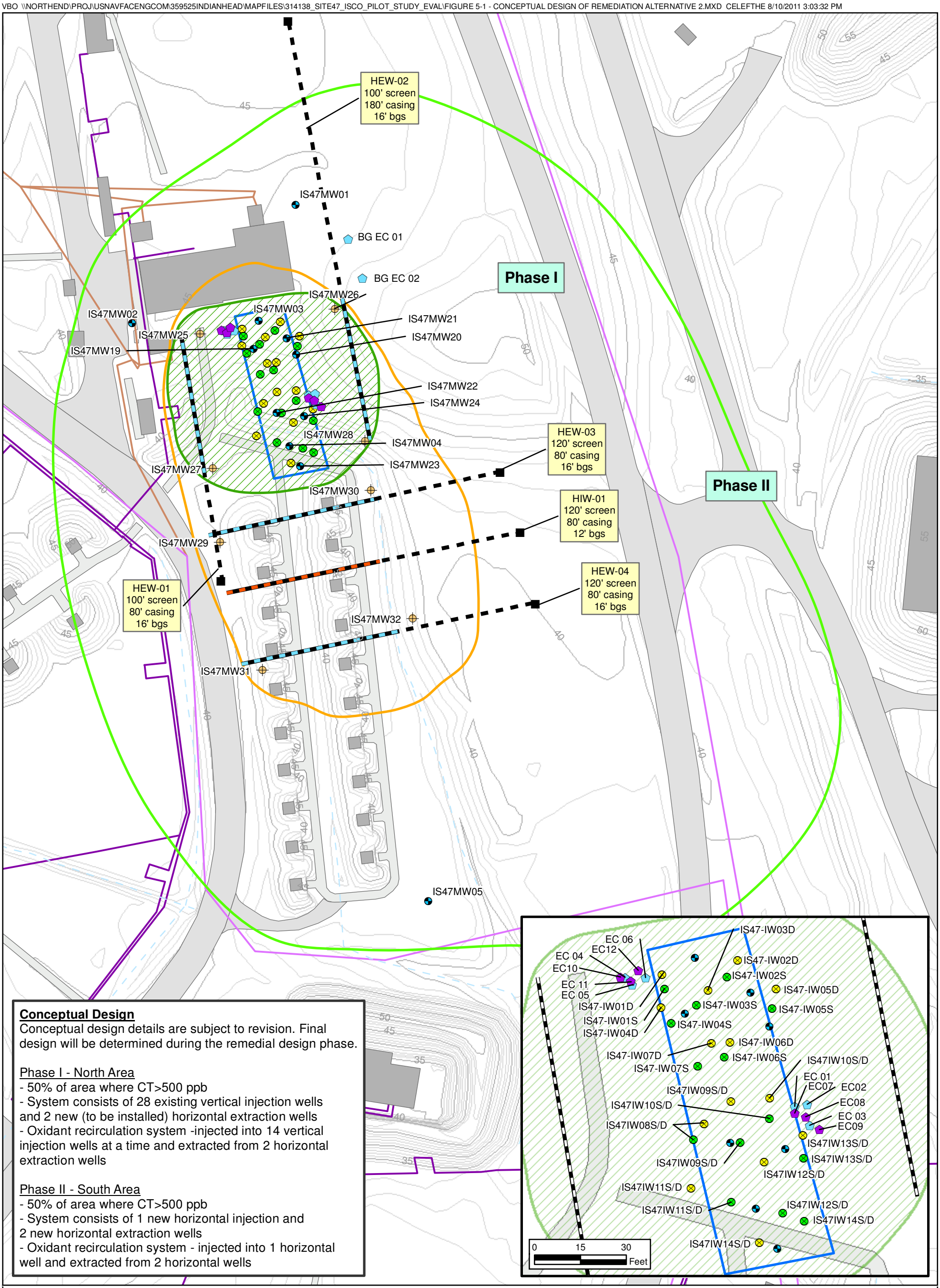

Conceptual Design

Conceptual design details are subject to revision. Final design will be determined during the remedial design phase.

Phase I - North Area
- 50% of area where CT>500 ppb
- System consists of 28 existing vertical injection wells and 2 new (to be installed) horizontal extraction wells
- Oxidant recirculation system -injected into 14 vertical injection wells at a time and extracted from 2 horizontal extraction wells

Phase II - South Area
- 50% of area where CT>500 ppb
- System consists of 1 new horizontal injection and 2 new horizontal extraction wells
- Oxidant recirculation system - injected into 1 horizontal well and extracted from 2 horizontal wells

Legend

- Proposed Monitoring Well Location
- Existing Monitoring Well Location
- EC Probe Location (November 2009)
- EC Profiling Location (July 2010)
- Well Head Completion Point
- Horizontal Extraction Well Screen
- Horizontal Injection Well Screen
- Well Casing
- Intermittent Swale
- Heating and Cooling Line
- Industrial Waste Line
- Waste Water Line
- Elevation Contour Line (1 ft Interval)
- Elevation Contour Line (5 ft Interval)
- Source Area (Carbon Terachloride >= 500 ppb)
- Pilot Study Area
- Inferred Residual DNAPL Area
- Building
- Road

N W E S

0 30 60 Feet

Figure 5-1
Conceptual Design of Remediation Alternative 2
Site 47 ISCO Pilot Study Technology
Performance Evaluation
NSF-IH, Indian Head, Maryland

CH2MHILL

SECTION 6

References

Biteman, et.al. 2010. *Pilot-Scale Reductive Dechlorination of Carbon Tetrachloride in Groundwater.* Presented in 7th International Conference on Remediation of Chlorinated and Recalcitrant Compounds. Monterey, CA. May.

CH2M HILL, 2003. *Final Remedial Investigation, Site 47 – Mercuric Nitrate Disposal Site, Indian Head, Maryland.*

CH2M HILL, 2004. *Final Work Plan for Pre-FS Investigation Activities at Site 47, Naval District Washington, Indian Head, Maryland.*

CH2M HILL, 2007. *Results of Site 47 Bench-Scale Studies Naval Support Facility Indian Head, Indian Head, Maryland.*

CH2M HILL, 2008a. *Final Site 47 Pilot Study Work Plan Technical Memorandum, Naval Support Facility Indian Head, Indian Head, Maryland.*

CH2M HILL, 2008b. *Final Site 47 Feasibility Study, Naval Support Facility Indian Head, Indian Head, Maryland.*

NEESA. 1992. *Preliminary Assessment Report. Naval Ordnance Station Indian Head, Maryland.*

Roberts and Sawyer, 1981. *Facile degradation by superoxide ion of carbon tetrachloride, chloroform, methylene chloride, and p,p'-DDT in aprotic media.* J. Am. Chem. Soc, 103, 712.

Roberts et al., 1983. *Oxygenation by superoxide ion of tetrachloromethane, trichlorofluoromethane, trichloromethane, p,p'-DDT and related trichloromethyl substrates (RCCl3) in aprotic solvents.* J. Am Chem. Soc, 105, 7691.

Shan, et al. 2010. *Evaluation of strategies for anaerobic bioremediation of high concentrations of halomethanes.* Water Research Volume 44 (2010) pp 1317-1328.

Siegrist, R.L., et.al. 2011. *In Situ Chemical Oxidation for Groundwater Remediation – Technology Practices Manual.*

Smith et al., 2004. "Identification of the Reactive Oxygen Species Responsible for Carbon Tetrachloride Degradation in Modified Fenton's Reagent", Submitted to *Environ. Sci. Technol.*

Watts et al., 2005. "Destruction of a Carbon Tetrachloride DNAPL by Modified Fenton's Reagent." *J. Environ. Eng.* 131:1114-1119.

Appendix A
Compilation of Photographs

PHOTOGRAPHIC LOG

NSF-IH	Site Location: NSF - Indian Head, Indian Head, MD	Project Number: 314138

Photo No.	Date:
1	4/27/2009

Description:
Photo of damaged water line.

Photo No.	Date:
2	4/27/2009

Description:
Photo of repair crew digging up damaged water line.

CH2MHILL

PHOTOGRAPHIC LOG

NSF-IH	Site Location: NSF - Indian Head, Indian Head, MD	Project Number: 314138

Photo No.	Date:
7	4/27/2009

Description:
Photo of water line after repairs

Photo No.	Date:
8	4/27/2009

Description:
Photo of northern cluster after repairs were completed

CH2MHILL

PHOTOGRAPHIC LOG

NSF-IH	Site Location: NSF - Indian Head, Indian Head, MD	Project Number: 314138

Photo No.	Date:
9	4/27/2009

Description:
Photo of relocated boring locations.

Photo No.	Date:
10	4/27/2009

Description:
Photo of relocated boring locations.

PHOTOGRAPHIC LOG

NSF-IH	Site Location: NSF - Indian Head, Indian Head, MD	Project Number: 314138

Photo No.	Date:
1	4/28/2009

Description:
Photo of Accumark using air-knife during utility clearance activities.

Photo No.	Date:
2	4/28/2009

Description:
Photo of Accumark performing vacuum extraction during utility clearance activities.

PHOTOGRAPHIC LOG

NSF-IH	Site Location: NSF - Indian Head, Indian Head, MD	Project Number: 314138

Photo No.	Date:
3	4/28/2009

Description:
Photo of Accumark performing vacuum extraction during utility clearance activities.

Photo No.	Date:
4	4/28/2009

Description:
Photo of ballards installed by SV05.

PHOTOGRAPHIC LOG

NSF-IH	Site Location: NSF - Indian Head, Indian Head, MD	Project Number: 314138

Photo No.	Date:
5	4/28/2009

Description:
Photo of ballards installed by SV05. SV07 and bollards in background.

Photo No.	Date:
6	4/28/2009

Description:
Photo of ballards installed by SV05. SV07 and bollards in background.

PHOTOGRAPHIC LOG

NSF-IH	Site Location: NSF - Indian Head, Indian Head, MD	Project Number: 314138

Photo No.	Date:
1	4/29/2009

Description:
Photo of soil core from SB21/MW20. Top of core is to the left. From Top: 14-18 ft bgs, 10-14 ft bgs, 6-10 ft bgs.

Photo No.	Date:
2	4/29/2009

Description:
Photo of soil core from SB22/MW21. Top of core is to the left. From Top: 14-18 ft bgs, 10-14 ft bgs, 6-10 ft bgs.

PHOTOGRAPHIC LOG

NSF-IH	Site Location: NSF - Indian Head, Indian Head, MD	Project Number: 314138

Photo No.	Date:
3	4/29/2009

Description:
Photo of soil core from SB20/MW19. Top of core is to the left.
From Top: 14-18 ft bgs, 10-14 ft bgs, 6-10 ft bgs.

Photo No.	Date:

PHOTOGRAPHIC LOG

NSF-IH	Site Location: NSF - Indian Head, Indian Head, MD	Project Number: 314138

Photo No.	Date:
1	5/1/2009

Description:
Photo of 2" diameter 0.020 slotted steel vee-screen used in Site 47 injection wells.

Photo No.	Date:
2	5/1/2009

Description:
Photo of IW01D. Top of boring is to the right. From top: 15-19 ft bgs; 11-15 ft bgs; 7-11 ft bgs.

PHOTOGRAPHIC LOG

NSF-IH	Site Location: NSF - Indian Head, Indian Head, MD	Project Number: 314138

Photo No.	Date:
3	5/1/2009

Description:
Photo of construction area at Bldg 856 in vicinity of proposed location of SV01.

Photo No.	Date:
4	5/1/2009

Description:
Photo of construction area at Bldg 856 in vicinity of proposed location of SV01.

PHOTOGRAPHIC LOG

NSF-IH	Site Location: NSF - Indian Head, Indian Head, MD	Project Number: 314138

Photo No.	Date:
5	5/1/2009

Description:
Photo of construction area at Bldg 856 in vicinity of proposed location of SV01.

Photo No.	Date:
6	5/1/2009

Description:
Photo of construction area at Bldg 856 in vicinity of proposed location of SV01.

PHOTOGRAPHIC LOG

NSF-IH	Site Location: NSF - Indian Head, Indian Head, MD	Project Number: 314138

Photo No.	Date:
7	5/1/2009

Description:
Photo of construction area at Bldg 856 in vicinity of proposed location of SV01. The pink stake in the photo represents the proposed location.

Photo No.	Date:
8	5/1/2009

Description:
Photo of construction area at Bldg 856 in vicinity of proposed location of SV01. The pink stake in the photo represents the proposed location.

PHOTOGRAPHIC LOG

NSF-IH	Site Location: NSF - Indian Head, Indian Head, MD	Project Number: 314138

Photo No.	Date:
9	5/1/2009

Description:
Photo of IW04D. Top of boring is to the right. From top: 15-19 ft bgs; 11-15 ft bgs; 7-11 ft bgs.

Photo No.	Date:
10	5/1/2009

Description:
Photo of construction area at Bldg 856 in vicinity of proposed location of SV01. The pink stake in the photo represents the proposed location.

PHOTOGRAPHIC LOG

NSF-IH	Site Location: NSF - Indian Head, Indian Head, MD	Project Number: 314138

Photo No.	Date:
11	5/1/2009

Description:
Photo of construction area at Bldg 856 in vicinity of proposed location of SV01. The pink stake in the photo represents the proposed location.

Photo No.	Date:
12	5/1/2009

Description:
Photo of construction area at Bldg 856 in vicinity of proposed location of SV01. The pink stake in the photo represents the proposed location.

PHOTOGRAPHIC LOG

NSF-IH	Site Location: NSF - Indian Head, Indian Head, MD	Project Number: 314138

Photo No.	Date:
1	5/2/2009

Description:
Photo of completed northern cluster.

Photo No.	Date:
2	5/2/2009

Description:
Photo of completed northern cluster.

PHOTOGRAPHIC LOG

NSF-IH	Site Location: NSF - Indian Head, Indian Head, MD	Project Number: 314138

Photo No.	Date:
3	5/2/2009

Description:
Photo of completed northern cluster.

Photo No.	Date:
4	5/3/2009

Description:
Photo of labeled Passive Soil Vent.

PHOTOGRAPHIC LOG

NSF-IH	Site Location: NSF - Indian Head, Indian Head, MD	Project Number: 314138

Photo No.	Date:
5	5/3/2009

Description:
Photo of labeled Passive Soil Vent.

Photo No.	Date:
6	5/3/2009

Description:
Photo of IDW staging area. 2 PPE drums, 5 decon/development drums, and 25 soil cuttings drums were generated during field activities.

PHOTOGRAPHIC LOG

NSF-IH	Site Location: NSF - Indian Head, Indian Head, MD	Project Number: 314138

Photo No.	Date:
1	10/28/2009

Description:
Injection lines layed out at Site 47

Photo No.	Date:
2	10/28/2009

Description:
Injection line with pressure gauge attached to well head

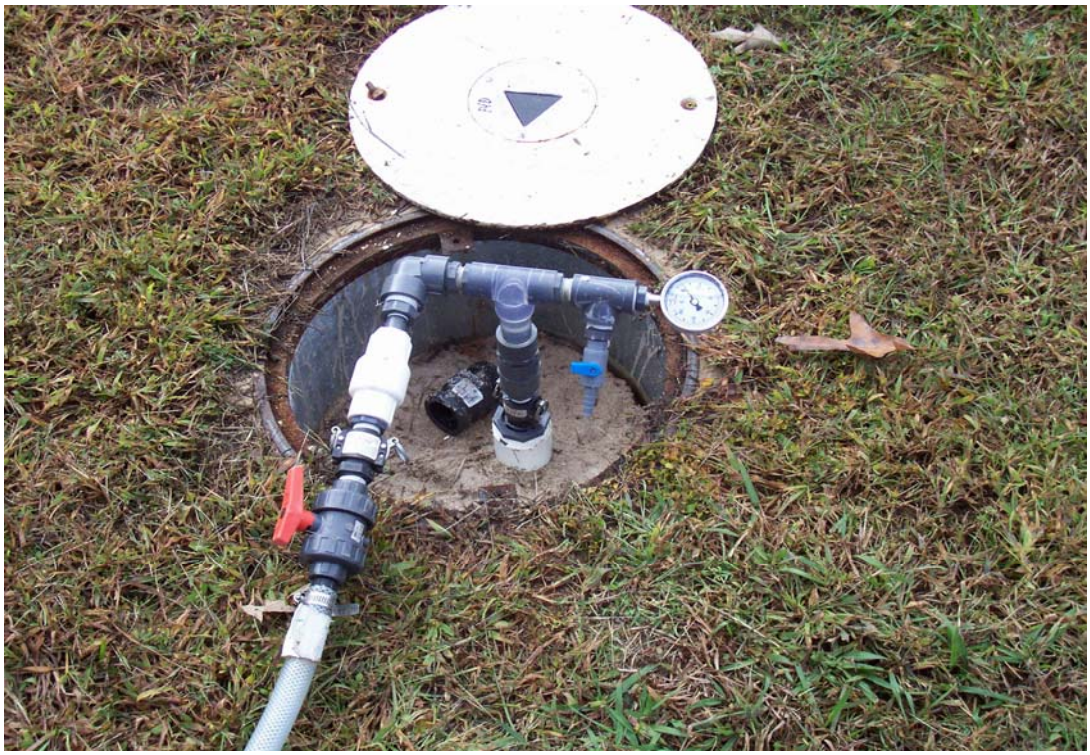

PHOTOGRAPHIC LOG

NSF-IH	Site Location: NSF - Indian Head, Indian Head, MD	Project Number: 314138

Photo No.	Date:
3	10/28/2009

Description:
Well seal broken at IW08S after injection

Photo No.	Date:
4	10/28/2009

Description:
Well seal foaming at IW07S after injection

PHOTOGRAPHIC LOG

NSF-IH	Site Location: NSF - Indian Head, Indian Head, MD	Project Number: 314138

Photo No.	Date:
5	11/05/2009

Description:
Layout of site; dry drainage ditch as injection continues

Photo No.	Date:
6	11/05/2009

Description:
Northern area of Site 47 and Injection Staging area in background

PHOTOGRAPHIC LOG

NSF-IH	Site Location: NSF - Indian Head, Indian Head, MD	Project Number: 314138

Photo No.	Date:
7	11/05/2009

Description:
Injection line attached to well head

Photo No.	Date:
8	11/05/2009

Description:
Injection lines and car port in foreground; in background are persulfate tanker (left) and steel drums containing purge water (right)

PHOTOGRAPHIC LOG

NSF-IH	Site Location: NSF - Indian Head, Indian Head, MD	Project Number: 314138

Photo No. 9	Date: 11/05/2009

Description:
Car port where diaphragm pumps, main skid, and well skids are housed

Photo No. 10	Date: 11/05/2009

Description:
Persulfate tanker in secondary containment

PHOTOGRAPHIC LOG

NSF-IH	Site Location: NSF - Indian Head, Indian Head, MD	Project Number: 314138

Photo No.	Date:
11	11/05/2009

Description:
Sodium hydroxide totes

Appendix B
Soil Boring Logs, Well Completion Diagrams, and Survey Data

CH2MHILL

PROJECT NUMBER	BORING NUMBER
314138.PT.SI	IS47SB24/IS47MW22 SHEET 1 OF 1

SOIL BORING LOG

PROJECT : NSF - Indian Head - Site 47 LOCATION : Indian Head, MD

ELEVATION : DRILLING CONTRACTOR : Parratt-Wolff, Hillsborough, NC

DRILLING METHOD AND EQUIPMENT USED : CME 55 - Direct-Push Technology

WATER LEVELS : START : 1050 4/16/09 END : 1125 4/16/09 LOGGER : I. Zmudzin/PHL

DEPTH BELOW SURFACE (FT)	SAMPLE INTERVAL	SAMPLE NUMBER AND TYPE	SAMPLE RECOVERY (FT)	STANDARD PENETRATION TEST RESULTS 6"-6"-6"-6" (N)	SOIL DESCRIPTION: SOIL NAME, USCS GROUP SYMBOL, COLOR, MOISTURE CONTENT, RELATIVE DENSITY, OR CONSISTENCY, SOIL STRUCTURE, MINERALOGY.	COMMENTS: DEPTH OF CASING, DRILLING RATE, DRILLING FLUID LOSS, TESTS, AND INSTRUMENTATION. OVM (ppm): Breathing Zone Headspace
0	0-4	SB-1	3'6"	---	0-6" - No recovery 6"-1' - FILL (7.5 YR 5/8 - Strong Brown) 1-1'5" - 10 YR 5/4 (Yellowish Brown) F. to M. SAND and Silt (SM) moist, loose, well sorted 1'5"-4' - 2.5 Y 6/4 (Light Yellowish Brown) F. to M. SAND and Silt (SM) moist, loose, well sorted, mottling at 3-3'3"	0.0 ppm
	4-8	SB-2	3'	---	4-5' - No Recovery 5-5'6" - 2.5 Y 6/4 (Light Yellowish Brown) F. to M. SAND and Silt (SM) wet, loose, well sorted 5'6"-6'5" - 10 YR 7/3 (Very Pale Brown) F. SAND and Silt (SM) wet, loose, very well sorted, laminated 6'5"-6'11" - 10 YR 6/8 (Brownish Yellow) F. to M. SAND and Silt (SM) wet, loose, very well sorted 6'11"-8' - 10 YR 6/1 (Light Gray) F. to M. SAND and Silt (SM) wet, loose, well sorted, clay lens at 7'4" to 7'5" (10 YR 4/2) wet, firm, moderate plasticity	0.0 ppm Water table at approx. 5 ft bgs IS47SB24-0609 (VOCs) 1100 IS47SB24P-0609 (VOCs) DUP
5						
	8-12	SB-3	3'6"	---	8-8'6" - No Recovery 8'6"-8'8" - 10 YR 7/1 (Light Gray) F. SAND and Silt (SM) wet, loose, well sorted 8'8"-8'11" - 10 YR 4/2 (Dark Grayish Brown) Silty CLAY (CL) wet, firm, moderate plasticity 8'11"-12' - 10 YR 7/2 (Light Gray) F. to M. SAND and Silt (SM) wet, loose, very well sorted	3.7 ppm at apprx. 9'6" bgs IS47SB24-0912 (VOCs) 1105 IS47SB24-1215 (VOCs) 1115
10						
	12-16	SB-4	2'6"	---	12-13'6" - No Recovery 13'6"-15'6" - 10 YR 7/2 (Light Gray) F. to M. SAND and Silt (SM) wet, loose, very well sorted 15'6"-16' - 10 YR 3/2 (Very Dark Grayish Brown) Silty CLAY (CL) moist, stiff, moderate plasticity, very well sorted	0.0 ppm IS47SB24-1516 (VOCs) 1120 IS47SB24-0616 (Metals/TOC) 1125
15						
					Bottom of Boring at approx. 16 ft bgs	Install IS47MW22 with screened interval at 5.5-15.5 ft bgs
20						
25						
30						

CH2MHILL

PROJECT NUMBER	BORING NUMBER
314138.PT.SI	IS47SB25/IS47MW23 SHEET 1 OF 1

SOIL BORING LOG

PROJECT : NSF - Indian Head - Site 47 LOCATION : Indian Head, MD
ELEVATION : DRILLING CONTRACTOR : Parratt-Wolff, Hillsborough, NC
DRILLING METHOD AND EQUIPMENT USED : CME 55 - Direct-Push Technology
WATER LEVELS : START : 1320 4/16/09 END : 1400 4/16/09 LOGGER : I. Zmudzin/PHL

DEPTH BELOW SURFACE (FT)	SAMPLE INTERVAL	SAMPLE NUMBER AND TYPE	SAMPLE RECOVERY (FT)	STANDARD PENETRATION TEST RESULTS 6"-6"-6" (N)	SOIL DESCRIPTION: SOIL NAME, USCS GROUP SYMBOL, COLOR, MOISTURE CONTENT, RELATIVE DENSITY, OR CONSISTENCY, SOIL STRUCTURE, MINERALOGY.	COMMENTS: DEPTH OF CASING, DRILLING RATE, DRILLING FLUID LOSS, TESTS, AND INSTRUMENTATION. OVM (ppm): 3reathing Zon Headspace
0	0-4	SB-1	3'6"	---	0-6" - No Recovery 6"-1'6" - 7.5 YR 5/4 (Brown) FILL 1'6"-2' - 10 YR 4/3 (Brown) F. to M. SAND and Silt (SM) moist, loose, well sorted 2-3'10" - 10 YR 7/2 (Light Gray) F. to M. SAND and Silt (SM) moist, loose, well sorted 3'10"-4' - 10 YR 6/6 (Brownish Yellow) F. to M. SAND and Silt (SM) moist, loose, well sorted	0.0 ppm
	4-8	SB-2	4'	---	4-5' - 10 YR 7/2 (Light Gray) F. to M. SAND and Silt (SM) moist, loose, very well sorted 5-5'8" - 10 YR 6/6 (Brownish Yellow) F. to M. SAND and Silt (SM) wet, loose, well sorted, lami 5'8"-5'11" - 10 YR 7/2 (Light Gray) F. to M. SAND and Silt (SM) wet, loose, very well sorted 5'11"-6'1" - 10 YR 4/2 (Dark Grayish Brown) Silty CLAY (CL) wet, firm, moderate plasticity	0.0 ppm Water table at approx. 4 ft bgs IS47SB23-0609 (VOCs) 0609
5						
					6'1"-6'9" - 10 YR 7/2 (Light Gray) F. to M. SAND and Silt (SM) wet, loose, very well sorted 6'9"-6'11" - 10 YR 4/2 (Dark Grayish Brown) Silty CLAY (CL) wet, firm, moderate plasticity 6'11"-7'10" - 10 YR 7/2 (Light Gray) F. to M. SAND and Silt (SM) wet, loose, very well sorted 7'11"-8' - 10 YR 4/2 (Dark Grayish Brown) Silty CLAY (CL) wet, firm, moderate plasticity	
10						
	8-12	SB-3	3'6"	---	8-8'6" - No Recovery 8'6"-12' - 2.5 Y 5/2 (Grayish Brown) F. to M. SAND and Silt (SM) wet, loose, very well sorted	2.3 ppm at approx. 10 ft bgs IS47SB23-0912 (VOCs) 1345, MS/MS IS47SB23-1215 (VOCs) 1350
	12-16	SB-4	3'	---	12-13' - No Recovery 13-14'6" - 2.5 Y 5/2 (Grayish Brown) F. to M. SAND and Silt (SM) wet, loose, very well sorted 14'6"-16' - 10 YR 3/2 (Very Dark Grayish Brown) Silty CLAY (CL) moist, firm, moderate plasticity, very well sorted	IS47SB23-1516 (VOCs) 1355 IS47SB23-0616 (Metals/TOC) 1400, MS/MSD
15						
					Bottom of Boring at approx. 16 ft bgs	Install IS47MW23 with screened inter 4.5-14.5 ft bgs
20						
25						
30						

CH2MHILL

PROJECT NUMBER	BORING NUMBER	
314138.PT.SI	IS47IW01D	SHEET 1 OF 1

SOIL BORING LOG

PROJECT : NSF - Indian Head - Site 47 LOCATION : Indian Head, MD

ELEVATION : DRILLING CONTRACTOR : Parratt-Wolff, Hillsborough, NC

DRILLING METHOD AND EQUIPMENT USED : CME 55 - Direct-Push Technology

WATER LEVELS : START : 1110 5/1/09 END : 1145 5/1/09 LOGGER : I. Zmudzin/PHL

DEPTH BELOW SURFACE (FT)	SAMPLE INTERVAL	SAMPLE NUMBER AND TYPE	SAMPLE RECOVERY (FT)	STANDARD PENETRATION TEST RESULTS 6"-6"-6"-6" (N)	SOIL DESCRIPTION: SOIL NAME, USCS GROUP SYMBOL, COLOR, MOISTURE CONTENT, RELATIVE DENSITY, OR CONSISTENCY, SOIL STRUCTURE, MINERALOGY.	COMMENTS: DEPTH OF CASING, DRILLING RATE, DRILLING FLUID LOSS, TESTS, AND INSTRUMENTATION. OVM (ppm): 3reathing Zon Headspace
0					0-7 ft bgs - Air-Knife and Vacuum Extraction	Water table between 3 and 4 ft bgs
7	7-11	SB-1	3'6"	---	7-7'6" - No Recovery 7'6"-9'5" - 10 YR 6/6 (Brownish Yellow) F. to M. SAND and Silt (SM) wet, loose, well sorted 9'5"-9'7" - 10 YR 6/8 (Brownish Yellow) F. to M. SAND and Silt (SM) wet, loose, well sorted 9'7"-9'9" - 10 YR 4/2 (Dark Grayish Brown) Silty CLAY (CL) wet, firm, moderate plasticity, well sorted 9'9"-10'4" - 2.5 Y 6/2 (Light Brownish Gray) F. SAND and Silt (SM) wet, loose, well sorted 10'4"-10'6" - 10 YR 4/2 (Dark Grayish Brown) Silty CLAY (CL) wet, firm, moderate plasticity, well sorted 10'6"-11' - 2.5 Y 6/2 (Light Brownish Gray) F. SAND and Silt (SM) wet, loose, well sorted	0.5 ppm
11	11-15	SB-2	3'6"	---	11-11'6" - No Recovery 11'6"-12'3" - 2.5 Y 6/2 (Light Brownish Gray) F. SAND and Silt (SM) wet, loose, well sorted 12'3"-12'6" - 10 YR 4/2 (Dark Grayish Brown) Silty CLAY (CL) wet, firm, moderate plasticity, well sorted 12'6"-15' - 2.5 Y 6/2 (Light Brownish Gray) F. SAND and Silt (SM) wet, loose, well sorted	0.2 ppm
15	15-19	SB-3	4'	---	15-18'11" - 2.5 Y 6/2 (Light Brownish Gray) F. SAND and Silt (SM) wet, loose, well sorted 18'11"-19' - 10 YR 3/2 (Very Dark Grayish Brown) Silty CLAY (CL) moist, firm, high plasticity, well sorted, 10 YR 3/2 (CL) in shoe of macrocore	0.2 ppm
					Bottom of Boring at approx. 19 ft bgs	Install IS47IW01D with screened interval at 14-19 ft bgs

CH2MHILL

PROJECT NUMBER	BORING NUMBER	
314138.PT.SI	IS47IW01S	SHEET 1 OF 1

SOIL BORING LOG

PROJECT : NSF - Indian Head - Site 47 LOCATION : Indian Head, MD

ELEVATION : DRILLING CONTRACTOR : Parratt-Wolff, Hillsborough, NC

DRILLING METHOD AND EQUIPMENT USED : CME 55 - Direct-Push Technology

WATER LEVELS : START : 1420 5/1/09 END : 1430 5/1/09 LOGGER : I. Zmudzin/PHL

DEPTH BELOW SURFACE (FT)	SAMPLE INTERVAL	SAMPLE NUMBER AND TYPE	SAMPLE RECOVERY (FT)	STANDARD PENETRATION TEST RESULTS 6"-6"-6"-6" (N)	SOIL DESCRIPTION: SOIL NAME, USCS GROUP SYMBOL, COLOR, MOISTURE CONTENT, RELATIVE DENSITY, OR CONSISTENCY, SOIL STRUCTURE, MINERALOGY.	COMMENTS: DEPTH OF CASING, DRILLING RATE, DRILLING FLUID LOSS, TESTS, AND INSTRUMENTATION. OVM (ppm): Breathing Zone Headspace
0					0-7 ft bgs - Air-Knife and Vacuum Extraction	Water table between 3 and 4 ft bgs
8	8-12	SB-1	2'6"	---	8-9'6" - No Recovery 9'6"-9'11" - 10 YR 6/8 (Brownish Yellow) F. to M. SAND (SM) wet, loose, well sorted 9'11"-10'4" - 10 YR 4/2 (Dark Grayish Brown) Silty CLAY (CL) wet, firm, moderate plasticity, well sorted 10'4"-10'10" - 2.5 Y 6/2 (Light Brownish Gray) F. SAND and Silt (SM) wet, loose, well sorte 10'10"-11' - 10 YR 4/2 (Dark Grayish Brown) Silty CLAY (CL) wet, firm, moderate plasticity, well sorted 11'-11'8" - 2.5 Y 6/2 (Light Brownish Gray) F. SAND and Silt (SM) wet, loose, well sorted 11'8"-11'10" - 10 YR 4/2 (Dark Grayish Brown) Silty CLAY (CL) wet, firm, moderate plasticity, well sorted 11'10"-12" - 2.5 Y 6/2 (Light Brownish Gray) F. SAND and Silt (SM) wet, loose, well sorted	1.4 ppm at approx. 11 ft bgs
					Bottom of Boring at approx. 12 ft bgs	Install IS47IW01S with screened interval at 7-12 ft bgs

CH2MHILL

PROJECT NUMBER	BORING NUMBER	
314138.PT.SI	IS47IW02D	SHEET 1 OF 1

SOIL BORING LOG

PROJECT : NSF - Indian Head - Site 47 LOCATION : Indian Head, MD

ELEVATION : DRILLING CONTRACTOR : Parratt-Wolff, Hillsborough, NC

DRILLING METHOD AND EQUIPMENT USED : CME 55 - Direct-Push Technology

WATER LEVELS : START : 1540 4/29/09 END : 1600 4/29/09 LOGGER : I. Zmudzin/PHL

DEPTH BELOW SURFACE (FT)	SAMPLE INTERVAL	SAMPLE NUMBER AND TYPE	SAMPLE RECOVERY (FT)	STANDARD PENETRATION TEST RESULTS 6"-6"-6"-6" (N)	SOIL DESCRIPTION: SOIL NAME, USCS GROUP SYMBOL, COLOR, MOISTURE CONTENT, RELATIVE DENSITY, OR CONSISTENCY, SOIL STRUCTURE, MINERALOGY.	COMMENTS: DEPTH OF CASING, DRILLING RATE, DRILLING FLUID LOSS, TESTS, AND INSTRUMENTATION. OVM (ppm): Breathing Zone Headspace
0					0-7 ft bgs - Air-Knife and Vacuum Extraction	Water table at approx. 3-4 ft bgs
6	6-10	SB-1	3'	---	6-7' - No Recovery 7-8'3" - 10 YR 7/3 (Very Pale Brown) F. to M. SAND and Silt (SM) wet, loose, well sorted, laminated 8'3"-9'1" - 10 YR 6/3 (Pale Brown) F. to M. SAND and Silt (SM) wet, loose, well sorted 9'1"-9'6" - 10 YR 6/8 (Brownish Yellow) F. to M. SAND and Silt (SM) wet, loose, well sorted 9'6"-10' - 10 YR 4/2 (Dark Grayish Brown) Silty CLAY (CL) wet, firm, moderate plasticity, well sorted	1.1 ppm at approx. 9'6" bgs
10	10-14	SB-2	3'6"	---	10-10'6" - No Recovery 10'6"-11'1" - 2.5 Y 6/2 (Light Brownish Gray) F. SAND and Silt (SM) wet, loose, well sorted 11'1"-11'3" - 10 YR 4/2 (Dark Grayish Brown) Silty CLAY (CL) wet, firm, moderate plasticity, well sorted 11'3"-12' - 2.5 Y 6/2 (Light Brownish Gray) F. SAND and Silt (SM) wet, loose, well sorted 12'-12'5" - 10 YR 4/2 (Dark Grayish Brown) Silty CLAY (CL) wet, firm, moderate plasticity, well sorted 12'5"-14' - 2.5 Y 6/2 (Light Brownish Gray) F. SAND and Silt (SM) wet, loose, well sorted	3.5 ppm at approx. 11 ft bgs
14	14-18	SB-3	2'6"	---	14-15'6" - No Recovery 15'6"-18' - 2.5 Y 6/2 (Light Brownish Gray) F. SAND and Silt (SM) wet, loose, well sorted	0.1 ppm
					Bottom of Boring at approx. 18 ft bgs	Install IS47IW02D with screened interval at 13-18 ft bgs

CH2MHILL

PROJECT NUMBER	BORING NUMBER
314138.PT.SI	IS47IW02S SHEET 1 OF 1

SOIL BORING LOG

PROJECT : NSF - Indian Head - Site 47 LOCATION : Indian Head, MD

ELEVATION : DRILLING CONTRACTOR : Parratt-Wolff, Hillsborough, NC

DRILLING METHOD AND EQUIPMENT USED : CME 55 - Direct-Push Technology

WATER LEVELS : START : 0805 4/30/09 END : 0815 4/30/09 LOGGER : I. Zmudzin/PHL

DEPTH BELOW SURFACE (FT)	SAMPLE INTERVAL	SAMPLE NUMBER AND TYPE	SAMPLE RECOVERY (FT)	STANDARD PENETRATION TEST RESULTS 6"-6"-6"-6" (N)	SOIL DESCRIPTION: SOIL NAME, USCS GROUP SYMBOL, COLOR, MOISTURE CONTENT, RELATIVE DENSITY, OR CONSISTENCY, SOIL STRUCTURE, MINERALOGY.	COMMENTS: DEPTH OF CASING, DRILLING RATE, DRILLING FLUID LOSS, TESTS, AND INSTRUMENTATION. OVM (ppm): Breathing Zone Headspace
0					0-7 ft bgs - Air-Knife and Vacuum Extraction	Water table between 3-4 ft bgs
8	8-12	SB-1	3'	---	8-9' - No Recovery 9-9'5" - 10 YR 6/4 (Light Yellowish Brown) F. to M. SAND and Silt (SM) wet, loose, well sorted 9'5"-9'9" - 10 YR 6/8 (Brownish Yellow) F. to M. SAND and Silt (SM) wet, loose, well sorted 9'9"-10' - 10 YR 4/2 (Dark Grayish Brown) Silty CLAY (CL) wet, firm, moderate plasticity, well sc 10'-10'6" - 2.5 Y 6/2 (Light Gray Brown) F. SAND and Silt (SM) wet, loose, well sorted 10'6"-10'9" - 10 YR 4/2 (Dark Grayish Brown) Silty CLAY (CL) wet, firm, moderate plasticity, well sorted 10'9"-11'4" - 2.5 Y 6/2 (Light Gray Brown) F. SAND and Silt (SM) wet, loose, well sorted 11'4"-11'7" - 10 YR 4/2 (Dark Grayish Brown) Silty CLAY (CL) wet, firm, moderate plasticity, well sorted 11'7"-12' - 2.5 Y 6/2 (Light Gray Brown) F. SAND and Silt (SM) wet, loose, well sorted	0.1 ppm
					Bottom of Boring at approx. 12 ft bgs	Install IS47IW02S with screened interval at 7-12 ft bgs

CH2MHILL

PROJECT NUMBER	BORING NUMBER	
314138.PT.SI	IS47IW03D	SHEET 1 OF 1

SOIL BORING LOG

PROJECT : NSF - Indian Head - Site 47 LOCATION : Indian Head, MD

ELEVATION : DRILLING CONTRACTOR : Parratt-Wolff, Hillsborough, NC

DRILLING METHOD AND EQUIPMENT USED : CME 55 - Direct-Push Technology

WATER LEVELS : START : 1455 4/30/09 END : 1525 4/30/09 LOGGER : I. Zmudzin/PHL

DEPTH BELOW SURFACE (FT)	SAMPLE INTERVAL	SAMPLE NUMBER AND TYPE	SAMPLE RECOVERY (FT)	STANDARD PENETRATION TEST RESULTS 6"-6"-6"-6" (N)	SOIL DESCRIPTION: SOIL NAME, USCS GROUP SYMBOL, COLOR, MOISTURE CONTENT, RELATIVE DENSITY, OR CONSISTENCY, SOIL STRUCTURE, MINERALOGY.	COMMENTS: DEPTH OF CASING, DRILLING RATE, DRILLING FLUID LOSS, TESTS, AND INSTRUMENTATION. OVM (ppm): 3reathing Zon· Headspace
0					0-7 ft bgs - Air-Knife and Vacuum Extraction	Water table at approx. 3-4 ft bgs
7	7-11	SB-1	3'	---	7-8' - No Recovery 8-8'4" - 10 YR 7/4 (Very Pale Brown) F. to M. SAND and Silt (SM) wet. loose. well sorted 8'4"-8'9" - 10 YR 6/8 (Brownish Yellow) F. to M. SAND and Silt (SM) wet, loose, well sorted 8'9"-9'1" - 10 YR 4/2 (Dark Grayish Brown) Silty CLAY (CL) wet, firm, moderate plasticity, well sorted 9'1"-9'8" - 2.5 Y 6/2 (Light Brownish Gray) F. SAND and Silt (SM) wet. loose. well sorted 9'8"9'9" - 10 YR 4/2 (Dark Grayish Brown) Silty CLAY (CL) wet, firm, moderate plasticity, well sorted 9'9"-10'5" - 2.5 Y 6/2 (Light Brownish Gray) F. SAND and Silt (SM) wet. loose. well sorted 10'5"-11' - 10 YR 4/2 (Dark Grayish Brown) Silty CLAY (CL) wet, firm, moderate plasticity,	12.3 ppm at 9'6" bgs
11	11-15	SB-2	3'6"	---	11-11'6" - No Recovery 11'6"-13'9" - 2.5 Y 6/2 (Light Brownish Gray) F. SAND and Silt (SM) wet, loose, well sorted 13'9"-15' - 2.5 Y 6/4 (Light Yellowish Brown) F. SAND and Silt (SM) wet, loose, well sorted	0.4 ppm
15	15-19	SB-3	3'6"	---	15-15'6" - No Recovery 15'6"-17'6" - 2.5 Y 6/4 (Light Yellowish Brown) F. SAND and Silt (SM) wet, loose, well sorted 17'6"-19' - 10 YR 3/2 (Very Dark Grayish Brown) Silty CLAY (CL) moist, firm, high plasticity, well sorted	0.2 ppm
					Bottom of Boring at approx. 19 ft bgs	Install IS47IW03D with screened interval at 12.5-17.5 ft bgs

CH2MHILL

PROJECT NUMBER	BORING NUMBER	
314138.PT.SI	IS47IW03S	SHEET 1 OF 1

SOIL BORING LOG

PROJECT : NSF - Indian Head - Site 47 LOCATION : Indian Head, MD

ELEVATION : DRILLING CONTRACTOR : Parratt-Wolff, Hillsborough, NC

DRILLING METHOD AND EQUIPMENT USED : CME 55 - Direct-Push Technology

WATER LEVELS : START : 0805 5/1/09 END : 0820 5/1/09 LOGGER : I. Zmudzin/PHL

DEPTH BELOW SURFACE (FT)	SAMPLE INTERVAL	SAMPLE NUMBER AND TYPE	SAMPLE RECOVERY (FT)	STANDARD PENETRATION TEST RESULTS 6"-6"-6"-6" (N)	SOIL DESCRIPTION: SOIL NAME, USCS GROUP SYMBOL, COLOR, MOISTURE CONTENT, RELATIVE DENSITY, OR CONSISTENCY, SOIL STRUCTURE, MINERALOGY.	COMMENTS: DEPTH OF CASING, DRILLING RATE, DRILLING FLUID LOSS, TESTS, AND INSTRUMENTATION. OVM (ppm): Breathing Zone Headspace
0					0-7 ft bgs - Air-Knife and Vacuum Extraction	Water table at approx. 3-4 ft bgs
8	8-12	SB-1	3'6"	---	8-8'6' - No Recovery 8'^'-8'9" - 10 YR 6/8 (Brownish Yellow) F. to M. SAND and Silt (SM) wet, loose, well sorted 8'9"-9'3" - 10 YR 4/2 (Dark Grayish Brown) Silty CLAY (CL) wet, firm, moderate plasticity, well sorted 9'3"-9'10" - 2.5 Y 6/2 (Light Brownish Gray) F. SAND and Silt (SM) wet, loose, well sorted 9'10"-10' - 10 YR 4/2 (Dark Grayish Brown) Silty CLAY (CL) wet, firm, moderate plasticity, 10'-10'9" - 2.5 Y 6/2 (Light Brownish Gray) F. SAND and Silt (SM) wet, loose, well sorted 10'9"-11' - 10 YR 4/2 (Dark Grayish Brown) Silty CLAY (CL) wet, firm, moderate plasticity, 11-12' - 2.5 Y 6/2 (Light Brownish Gray) F. SAND and Silt (SM) wet, loose, well sorted	0.3 ppm
					Bottom of Boring at approx. 12 ft bgs	Install IS47Iw03S with screened interval at 7-12 ft bgs

CH2MHILL

PROJECT NUMBER	BORING NUMBER	
314138.PT.SI	IS47IW04D	SHEET 1 OF 1

SOIL BORING LOG

PROJECT : NSF - Indian Head - Site 47 LOCATION : Indian Head, MD

ELEVATION : DRILLING CONTRACTOR : Parratt-Wolff, Hillsborough, NC

DRILLING METHOD AND EQUIPMENT USED : CME 55 - Direct-Push Technology

WATER LEVELS : START : 1515 5/1/09 END : 1535 5/1/09 LOGGER : I. Zmudzin/PHL

DEPTH BELOW SURFACE (FT)	SAMPLE INTERVAL	SAMPLE NUMBER AND TYPE	SAMPLE RECOVERY (FT)	STANDARD PENETRATION TEST RESULTS 6"-6"-6" (N)	SOIL DESCRIPTION: SOIL NAME, USCS GROUP SYMBOL, COLOR, MOISTURE CONTENT, RELATIVE DENSITY, OR CONSISTENCY, SOIL STRUCTURE, MINERALOGY.	COMMENTS: DEPTH OF CASING, DRILLING RATE, DRILLING FLUID LOSS, TESTS, AND INSTRUMENTATION. OVM (ppm): Breathing Zone Headspace
0					0-7 ft bgs - Air-Knife and Vacuum Extraction	Water table at approx. 3-4 ft bgs
7	7-11	SB-1	3'6"	---	7-7'6" - No Recovery 7'6"-8'7" - 10 YR 6/6 (Brownish Yellow) F. to M. SAND and Silt (SM) wet, loose, well sorted 8'7"-8'11" - 10 YR 6/8 (Brownish Yellow) F. to M. SAND and Silt (SM) wet, loose, well sorted 8'11"-9' - 2.5 Y 6/2 (Light Brownish Gray) F. SAND and Silt (SM) wet, loose, well sorted 9'-9'3" - 10 YR 4/2 (Dark Grayish Brown) Silty CLAY (CL) wet, firm, moderate plasticity, well sorted 9'3"-9'10" - 2.5 Y 6/2 (Light Brownish Gray) F. SAND and Silt (SM) wet, loose, well sorted 9'10"-10' - 10 YR 4/2 (Dark Grayish Brown) Silty CLAY (CL) wet, firm, moderate plasticity, well sorted 10-11' - 2.5 Y 6/2 (Light Brownish Gray) F. SAND and Silt (SM) wet, loose, well sorted	1.3 ppm at 10'3" bgs
11	11-15	SB-2	3'6"	---	11-11'6" - No Recovery 11'6"-12'5" - 2.5 Y 6/2 (Light Brownish Gray) F. SAND and Silt (SM) wet, loose, well sorted 12'5"-15' - 10 YR 6/4 (Light Yellowish Brown) F. SAND and Silt (SM) wet, loose, well sorted	0.2 ppm
15	15-19	SB-3	3'6"	---	15-15'6" - No Recovery 15'6"-17'9" - 2.5 Y 6/2 (Light Brownish Gray) F. SAND and Silt (SM) wet, loose, well sorted 17'9"-19' - 10 YR 3/2 (Very Dark Grayish Brown) Silty CLAY (CL) moist, firm, high plasticity, well sorted	0.2 ppm
					Bottom of Boring at approx. 19 ft bgs	Install IS47IW04D with screened interval at 12.5-17.5 ft bgs

CH2MHILL

PROJECT NUMBER	BORING NUMBER	
314138.PT.SI	IS47IW04S	SHEET 1 OF 1

SOIL BORING LOG

PROJECT : NSF - Indian Head - Site 47 LOCATION : Indian Head, MD
ELEVATION : DRILLING CONTRACTOR : Parratt-Wolff, Hillsborough, NC
DRILLING METHOD AND EQUIPMENT USED : CME 55 - Direct-Push Technology
WATER LEVELS : START : 0940 5/1/09 END : 0955 5/1/09 LOGGER : I. Zmudzin/PHL

DEPTH BELOW SURFACE (FT)	SAMPLE INTERVAL	SAMPLE NUMBER AND TYPE	SAMPLE RECOVERY (FT)	STANDARD PENETRATION TEST RESULTS 6"-6"-6" (N)	SOIL DESCRIPTION: SOIL NAME, USCS GROUP SYMBOL, COLOR, MOISTURE CONTENT, RELATIVE DENSITY, OR CONSISTENCY, SOIL STRUCTURE, MINERALOGY.	COMMENTS: DEPTH OF CASING, DRILLING RATE, DRILLING FLUID LOSS, TESTS, AND INSTRUMENTATION. OVM (ppm): 3reathing Zon· Headspace
0					0-7 ft bgs - Air-Knife and Vacuum Extraction	Water table at approx. 3-4 ft bgs
8	8-12	SB-1	3'6"		8-8'6" - No Recovery 8'6"-8'10" - 10 YR 4/2 (Dark Grayish Brown) Silty CLAY (CL) wet, firm, moderate plasticity, 8'10"-9'5" - 2.5 Y 6/2 (Light Brownish Gray) F. SAND and Silt (SM) wet, loose, well sorted 9'5"-9'7" - 10 YR 4/2 (Dark Grayish Brown) Silty CLAY (CL) wet, firm, moderate plasticity, well sorted 9'7"-10'5" - 2.5 Y 6/2 (Light Brownish Gray) F. SAND and Silt (SM) wet, loose, well sorted 10'5"-10'8" - 10 YR 4/2 (Dark Grayish Brown) Silty CLAY (CL) wet, firm, moderate plasticity, well sorted 10'8"-12' - 2.5 Y 6/2 (Light Brownish Gray) F. SAND and Silt (SM) wet, loose, well sorted	7.6 ppm at approx. 9'3" bgs
					Bottom of Boring at approx. 12 ft bgs	Install IS47IW04S with screened interval at 7-12 ft bgs

CH2MHILL

PROJECT NUMBER	BORING NUMBER	
314138.PT.SI	IS47IW05D	SHEET 1 OF 1

SOIL BORING LOG

PROJECT : NSF - Indian Head - Site 47 LOCATION : Indian Head, MD

ELEVATION : DRILLING CONTRACTOR : Parratt-Wolff, Hillsborough, NC

DRILLING METHOD AND EQUIPMENT USED : CME 55 - Direct-Push Technology

WATER LEVELS : START : 1250 4/29/09 END : 1315 4/29/09 LOGGER : I. Zmudzin/PHL

DEPTH BELOW SURFACE (FT)	SAMPLE INTERVAL	SAMPLE NUMBER AND TYPE	SAMPLE RECOVERY (FT)	STANDARD PENETRATION TEST RESULTS 6"-6"-6"-6" (N)	SOIL DESCRIPTION: SOIL NAME, USCS GROUP SYMBOL, COLOR, MOISTURE CONTENT, RELATIVE DENSITY, OR CONSISTENCY, SOIL STRUCTURE, MINERALOGY.	COMMENTS: DEPTH OF CASING, DRILLING RATE, DRILLING FLUID LOSS, TESTS, AND INSTRUMENTATION. OVM (ppm): Breathing Zone Headspace
0					0-7 ft bgs - Air-Knife and Vacuum Extraction	Water table at approx. 3-4 ft bgs
6	6-10	SB-1	3'	---	6-7' - No Recovery 7-9' - 10 YR 6/6 (Brownish Yellow) F. to M. SAND and Silt (SM) wet, loose, well sorted, laminated 9-9'3" - 2.5 Y 7/4 (Pale Yellow) F. SAND and Silt (SM) wet, loose, well sorted 9'3"-9'7" - 10 YR 6/8 (Brownish Yellow) F. to M. SAND and Silt (SM) wet, loose, well sorted 9'7"-9'8" - 2.5 Y 6/2 (Light Grayish Brown) F. SAND and Silt (SM) wet, loose, well sorted 9'8"-10' - 10 YR 4/2 (Dark Grayish Brown) Silty CLAY (CL) wet, firm, moderate plasticity, well sorted	0.0 ppm
10	10-14	SB-2	3'6"	---	10-10'6" - No Recovery 10'6"-11'5" - 2.5 Y 6/2 (Light Grayish Brown) F. SAND and Silt (SM) wet, loose, well sorted 11'5"-11'9" - 10 YR 4/2 (Dark Grayish Brown) Silty CLAY (CL) wet, firm, moderate plasticity, well sorted 11'9"-12'4" - 2.5 Y 6/2 (Light Grayish Brown) F. SAND and Silt (SM) wet, loose, well sorted 12'4"-12'7" - 10 YR 4/2 (Dark Grayish Brown) Silty CLAY (CL) wet, firm, moderate plasticity, well sorted 12'7"-14' - 2.5 Y 6/2 (Light Grayish Brown) F. SAND and Silt (SM) wet, loose, well sorted	0.0 ppm
14	14-18	SB-3	3'	---	14-15' - No Recovery 15-18' - 2.5 Y 6/2 (Light Grayish Brown) F. SAND and Silt (SM) wet, loose, well sorted	0.2 ppm
					Bottom of Boring at approx. 18 ft bgs	Install IS47IW05D with screened interval at 13-18 ft bgs

CH2MHILL

PROJECT NUMBER	BORING NUMBER	
314138.PT.SI	IS47IW05S	SHEET 1 OF 1

SOIL BORING LOG

PROJECT : NSF - Indian Head - Site 47 LOCATION : Indian Head, MD

ELEVATION : DRILLING CONTRACTOR : Parratt-Wolff, Hillsborough, NC

DRILLING METHOD AND EQUIPMENT USED : CME 55 - Direct-Push Technology

WATER LEVELS : START : 1430 4/29/09 END : 1440 4/29/09 LOGGER : I. Zmudzin/PHL

DEPTH BELOW SURFACE (FT)	SAMPLE INTERVAL	SAMPLE NUMBER AND TYPE	SAMPLE RECOVERY (FT)	STANDARD PENETRATION TEST RESULTS 6"-6"-6"-6" (N)	SOIL DESCRIPTION: SOIL NAME, USCS GROUP SYMBOL, COLOR, MOISTURE CONTENT, RELATIVE DENSITY, OR CONSISTENCY, SOIL STRUCTURE, MINERALOGY.	COMMENTS: DEPTH OF CASING, DRILLING RATE, DRILLING FLUID LOSS, TESTS, AND INSTRUMENTATION. OVM (ppm): 3reathing Zon· Headspace
0					0-7 ft bgs - Air-Knife and Vacuum Extraction	Water table at approx. 3-4 ft bgs
8	8-12	SB-1	3'6"	---	8-8'6" - No Recovery 8'6"-9'3" - 10 YR 7/4 (Very Pale Brown) F. to M. SAND and Silt (SM) wet, loose, well sorted 9'3"-9'6" - 10 YR 6/8 (Brownish Yellow) F. to M. SAND and Silt (SM) wet, loose, well sorted 9'6"-9'7" - 2.5 Y 6/2 (Light Brownish Gray) F. to M. SAND and Silt (SM) wet, loose, well sorted 9'7"-9'11" - 10 YR 4/2 (Dark Brownish Gray) Silty CLAY (CL) wet, firm, moderate plasticity, well sorted 9'11"-10'7" - 2.5 Y 6/2 (Light Brownish Gray) F. to M. SAND and Silt (SM) wet, loose, well sorted 10'7"-10'10" - 10 YR 4/2 (Dark Brownish Gray) Silty CLAY (CL) wet, firm, moderate plasticity, well sorted 10'10"-11'5" - 2.5 Y 6/2 (Light Brownish Gray) F. to M. SAND and Silt (SM) wet, loose, well sorted 11'5"-11'10" - 10 YR 4/2 (Dark Brownish Gray) Silty CLAY (CL) wet, firm, moderate plasticity, 11'10"-12' - 2.5 Y 6/2 (Light Brownish Gray) F. to M. SAND and Silt (SM) wet, loose, well sc Bottom of Boring at approx. 12 ft bgs	0.1 ppm Install IS47IW05S with screened interval at 7-12 ft bgs

CH2MHILL

PROJECT NUMBER	BORING NUMBER
314138.PT.SI	IS47IW06D SHEET 1 OF 1

SOIL BORING LOG

PROJECT : NSF - Indian Head - Site 47 LOCATION : Indian Head, MD
ELEVATION : DRILLING CONTRACTOR : Parratt-Wolff, Hillsborough, NC
DRILLING METHOD AND EQUIPMENT USED : CME 55 - Direct-Push Technology
WATER LEVELS : START : END : LOGGER : I. Zmudzin/PHL

DEPTH BELOW SURFACE (FT)	SAMPLE INTERVAL	SAMPLE NUMBER AND TYPE	SAMPLE RECOVERY (FT)	STANDARD PENETRATION TEST RESULTS 6"-6"-6" (N)	SOIL DESCRIPTION: SOIL NAME, USCS GROUP SYMBOL, COLOR, MOISTURE CONTENT, RELATIVE DENSITY, OR CONSISTENCY, SOIL STRUCTURE, MINERALOGY.	COMMENTS: DEPTH OF CASING, DRILLING RATE, DRILLING FLUID LOSS, TESTS, AND INSTRUMENTATION. OVM (ppm): Breathing Zone Headspace
0					0-7 ft bgs - Air-Knife and Vacuum Extraction	Water table at approx. 3-4 ft bgs
6	6-10	SB-1	2'6"	---	6-7' - N/A (Air-Knife) 7-7'6" - No Recovery 7'6"-7'8" - 2.5 Y 6/4 (Light Yellowish Brown) F. to M. SAND and Silt (SM) wet, loose, well sorted, laminated 7'8"-7'9" - 2.5 Y 4/0 (Dark Gray) F. to M. SAND and Silt (SM) wet. loose. well sorted 7'9"-8'1" - 10 YR 6/8 (Brownish Yellow) F. to M. SAND and Silt (SM) wet, loose, well sorted	5.5 ppm at approx. 9'6" bgs
					8'1"-8'3" - 10 YR 4/2 (Dark Grayish Brown) Silty CLAY (CL) wet, firm, moderate plasticity, well sorted 8'3"-8'10" - 2.5 Y 6.2 (Light Brownish Gray) F. SAND and Silt (SM) wet, loose, well sorted 8'10"-9' - 10 YR 4/2 (Dark Grayish Brown) Silty CLAY (CL) wet, firm, moderate plasticity, well sorted 9-9'10" - 2.5 Y 6/2 (Light Brownish Gray) F. SAND and Silt (SM) wet, loose, well sorted 9'10"-10' - 10 YR 4/2 (Dark Grayish Brown) Silty CLAY (CL) wet, firm, moderate plasticity, well sorted	
10	10-14	SB-2	3'6"	---	10-10'6" - No Recovery 10'6"-12'6" - 2.5 Y 6/2 (Light Brownish Gray) F. SAND and Silt (SM) wet, loose, well sorted 12'6"-14' - 2.5 Y 6/4 (Light Yellowish Brown) F. SAND and Silt (SM) wet, loose, well sorted	4.1 ppm at approx. 11 ft bgs
14	14-18	SB-3	3'6"	---	14-14'6" - No Recovery 14'6"-16'6" - 2.5 Y 6/4 (Light Yellowish Brown) F. SAND and Silt (SM) wet, loose, well sorted 16'6"-18' - 10 YR 3/2 (Very Dark Grayish Brown) Silty CLAY (CL) moist, firm, moderate plasticity, well sorted	0.1 ppm
					Bottom of Boring at approx. 18 ft bgs	Install IS47IW06D with screened interval at 11.5-16.5 ft bgs

CH2MHILL

PROJECT NUMBER	BORING NUMBER	
314138.PT.SI	IS47IW06S	SHEET 1 OF 1

SOIL BORING LOG

PROJECT : NSF - Indian Head - Site 47 LOCATION : Indian Head, MD

ELEVATION : DRILLING CONTRACTOR : Parratt-Wolff, Hillsborough, NC

DRILLING METHOD AND EQUIPMENT USED : CME 55 - Direct-Push Technology

WATER LEVELS : START : 1525 4/22/09 END : 1545 4/22/09 LOGGER : I. Zmudzin/PHL

DEPTH BELOW SURFACE (FT)	SAMPLE INTERVAL	SAMPLE NUMBER AND TYPE	SAMPLE RECOVERY (FT)	STANDARD PENETRATION TEST RESULTS 6"-6"-6"-6" (N)	SOIL DESCRIPTION: SOIL NAME, USCS GROUP SYMBOL, COLOR, MOISTURE CONTENT, RELATIVE DENSITY, OR CONSISTENCY, SOIL STRUCTURE, MINERALOGY.	COMMENTS: DEPTH OF CASING, DRILLING RATE, DRILLING FLUID LOSS, TESTS, AND INSTRUMENTATION. OVM (ppm): 3reathing Zon· Headspace
0	0-4	SB-1	2'6"	---	0-1'6" - No Recovery 1'6"-2'8" - 2.5 Y 6/4 (Light Yellowish Brown) F. SAND and Silt, Trace Clay (SC) moist, medium, well sorted 2'8"-2'10" - 10 YR 3/2 (Very Dark Grayish Brown) F. SAND and Silt (SM) moist, loose, well sorted 2'10"-4' - 2.5 Y 5/4 (Light Olive Brown) F. to M. SAND and Silt (SM) moist, loose, well sorted, mottled, laminated	0.4 ppm
4	4-8	SB-2	3'6"	---	4-4'6" - No Recovery 4'6"-5'5" - 2.5 Y 5/4 (Light Olive Brown) F. to M. SAND and Silt (SM) moist, loose, well sorted, mottled 5'5"-6'6" - 10 YR 7/6 (Yellow) F. to M. SAND and Silt (SM) wet, loose, well sorted, laminated 6'6"-7' - 10 YR 7/3 (Very Pale Brown) F. to M . SAND and Silt (SM) wet, loose, well sorted 7-7'3" - 10 yr 7/6 (Yellow) F. to M. SAND and Silt (SM) wet, loose, well sorted 7'3"-7'8" - 2.5 Y 6/2 (Light Grayish Brown) F. SAND and Silt (SM) wet, loose, well sorted 7'8"-7'10" - 10 YR 6/8 (Brownish Yellow) F. SAND and Silt (SM) wet, loose, well sorted 7'10"-7'11" - 10 YR 3/2 (Very Dark Grayish Brown) Silty CLAY (CL) wet, firm, moderate plasticity, well sorted	0.2 ppm at approx. 5'6" bgs
8	8-12	SB-3	3'	---	7'11"-8' - 10 YR 6/2 (Light Brownish Gray) F. to M. SAND and Silt (SM) moist, loose, well sorted 8-9' - No Recovery 9-9'5" - 10 YR 6/2 (Light Brownish Gray) F. to M. SAND and Silt (SM) moist, loose, well sorted 9'5"-9'8" - 10 YR 3/2 (Very Dark Grayish Brown) Silty CLAY (CL) wet, firm, moderate plasticity, well sorted 9'8"-10'5" - 10 YR 6/2 (Light Brownish Gray) F. to M. SAND and Silt (SM) moist, loose, well sorted 10'5"-10'7" - 10 YR 3/2 (Very Dark Grayish Brown) Silty CLAY (CL) wet, firm, moderate plasticity, well sorted 10'7"-12' - 10 YR 6/2 (Light Brownish Gray) F. to M. SAND and Silt (SM) moist, loose, well sorted	10.9 ppm at approx. 10 ft bgs
					Bottom of Boring at approx. 12 ft bgs	Install IS47IW06S with screened interval at 7-12 ft bgs

CH2MHILL

PROJECT NUMBER	BORING NUMBER	
314138.PT.SI	IS47IW07D	SHEET 1 OF 1

SOIL BORING LOG

PROJECT : NSF - Indian Head - Site 47 LOCATION : Indian Head, MD

ELEVATION : DRILLING CONTRACTOR : Parratt-Wolff, Hillsborough, NC

DRILLING METHOD AND EQUIPMENT USED : CME 55 - Direct-Push Technology

WATER LEVELS : START : 1250 4/30/09 END : 1315 4/30/09 LOGGER : I. Zmudzin/PHL

DEPTH BELOW SURFACE (FT)	SAMPLE INTERVAL	SAMPLE NUMBER AND TYPE	SAMPLE RECOVERY (FT)	STANDARD PENETRATION TEST RESULTS 6"-6"-6" (N)	SOIL DESCRIPTION: SOIL NAME, USCS GROUP SYMBOL, COLOR, MOISTURE CONTENT, RELATIVE DENSITY, OR CONSISTENCY, SOIL STRUCTURE, MINERALOGY.	COMMENTS: DEPTH OF CASING, DRILLING RATE, DRILLING FLUID LOSS, TESTS, AND INSTRUMENTATION. OVM (ppm): Breathing Zone Headspace
0					0-7 ft bgs - Air-Knife and Vacuum Extraction	Water table at approx. 3-4 ft bgs
7	7-11	SB-1	4'	---	7'-7'8" - 2.5 Y 6/2 (Light Brownish Gray) F. SAND and Silt (SM) wet, loose, well sorted 7'8"-7'10" - 10 YR 4/2 (Dark Grayish Brown) Silty CLAY (CL) wet, firm, moderate plasticity, well sorted 7'10"-8'7" - 2.5 Y 6/2 (Light Brownish Gray) F. SAND and Silt (SM) wet, loose, well sorted 8'7"-8'9" - 10 YR 4/2 (Dark Grayish Brown) Silty CLAY (CL) wet, firm, moderate plasticity, well sorted	17.2 ppm at approx. 7'8" bgs
					8'9"-11' - 2.5 Y 6/2 (Light Brownish Gray) F. SAND and Silt (SM) wet, loose, well sorted	
11	11-15	SB-2	3'	---	11-12' - No Recovery 12-13'3" - 10 YR 6/4 (Light Yellowish Brown) F. SAND and Silt (SM) wet, loose, well sorted 13'3"-15' - 2.5 Y 6/2 (Light Brownish Gray) F. SAND and Silt (SM) wet, loose, well sorted	0.1 ppm
15	15-18	SB-3	3'	---	15-16' - 2.5 Y 6/2 (Light Brownish Gray) F. SAND and Silt (SM) wet, loose, well sorted 16-18' - 10 YR 3/2 (Very Dark Grayish Brown) Silty CLAY (CL) moist, firm, high plasticity, well sorted	0.2 ppm
					Bottom of Boring at approx. 18 ft bgs	Install IS47IW07D with screened interval at 11-16 ft bgs

CH2MHILL

PROJECT NUMBER	BORING NUMBER	
314138.PT.SI	IS47IW07S	SHEET 1 OF 1

SOIL BORING LOG

PROJECT : NSF - Indian Head - Site 47 LOCATION : Indian Head, MD

ELEVATION : DRILLING CONTRACTOR : Parratt-Wolff, Hillsborough, NC

DRILLING METHOD AND EQUIPMENT USED : CME 55 - Direct-Push Technology

WATER LEVELS : START : 1425 4/22/09 END : 1445 4/22/09 LOGGER : I. Zmudzin/PHL

DEPTH BELOW SURFACE (FT)	SAMPLE INTERVAL	SAMPLE NUMBER AND TYPE	SAMPLE RECOVERY (FT)	STANDARD PENETRATION TEST RESULTS 6"-6"-6" (N)	SOIL DESCRIPTION: SOIL NAME, USCS GROUP SYMBOL, COLOR, MOISTURE CONTENT, RELATIVE DENSITY, OR CONSISTENCY, SOIL STRUCTURE, MINERALOGY.	COMMENTS: DEPTH OF CASING, DRILLING RATE, DRILLING FLUID LOSS, TESTS, AND INSTRUMENTATION. OVM (ppm): 3reathing Zon· Headspace
0	0-4	SB-1	2'	---	0-2' - No Recovery 2-3' - 10 YR 3/2 (Very Dark Grayish Brown) F. SAND and Silt (SM) moist, loose, well sorted, trace organics (roots) 3-4' - 2.5 Y 6/8 (Olive Yellow) F. to M. SAND and Silt (SM) moist, loose, well sorted	0.1 ppm
4	4-8	SB-2	3'6"	---	4-4'6" - No Recovery 4'6"-5' - 2.5 Y 6/8 (Olive Yellow) F. to M. SAND and Silt (SM) moist, loose, well sorted 5'-5'2" - 10 YR 3/2 (Very Dark Grayish Brown) F. SAND and Silt (SM) moist, loose, well sorted 5'2"-6'11" - 10 YR 7/4 (Very Pale Brown) F. to M. SAND and Silt (SM) moist, loose, well sorted, laminated 6'11"-7'2" - 10 YR 6/8 (Brownish Yellow) F. to M. SAND and Silt (SM) wet, loose, well sorted 7'2"-7'4" - 10 YR 3/2 (Very Dark Grayish Brown) Silty CLAY (CL) wet, firm, moderate plasticity, well sorted 7'4"-8' - 10 YR 6/2 (Light Brownish Gray) F. SAND and Silt (SM) wet, loose, well sorted	0.1 ppm Water table encountered at approx. 5-6 ft bgs
8	8-12	SB-3	3'6"	---	8-8'6" - No Recovery 8'6"-9'6" - 10 YR 6/2 (Light Brownish Gray) F. SAND and Silt (SM) wet, loose, well sorted 9'6"-9'9" - 10 YR 3/2 (Very Dark Grayish Brown) Silty CLAY (CL) wet, firm, moderate plasticity, well sorted 9'9"-11'11' - 10 YR 6/2 (Light Brownish Gray) F. to M. SAND and Silt (SM) wet, loose, well sorted 11'11"-12' - 2.5 Y 6/6 (Olive Yellow) F. SAND and Silt (SM) wet, loose, well sorted	8.1 ppm at approx. 10 ft bgs
					Bottom of Boring at approx. 12 ft bgs	Install IS47IW07S with screened interval at 7-12 ft bgs

CH2MHILL

PROJECT NUMBER	BORING NUMBER	
314138.PT.SI	IS47IW08D	SHEET 1 OF 1

SOIL BORING LOG

PROJECT : NSF - Indian Head - Site 47 LOCATION : Indian Head, MD

ELEVATION : DRILLING CONTRACTOR : Parratt-Wolff, Hillsborough, NC

DRILLING METHOD AND EQUIPMENT USED : CME 55 - Direct-Push Technology

WATER LEVELS : START : 1525 4/20/09 END : 1600 4/20/09 LOGGER : I. Zmudzin/PHL

DEPTH BELOW SURFACE (FT)	SAMPLE INTERVAL	SAMPLE NUMBER AND TYPE	SAMPLE RECOVERY (FT)	STANDARD PENETRATION TEST RESULTS 6"-6"-6"-6" (N)	SOIL DESCRIPTION: SOIL NAME, USCS GROUP SYMBOL, COLOR, MOISTURE CONTENT, RELATIVE DENSITY, OR CONSISTENCY, SOIL STRUCTURE, MINERALOGY.	COMMENTS: DEPTH OF CASING, DRILLING RATE, DRILLING FLUID LOSS, TESTS, AND INSTRUMENTATION. OVM (ppm): 3reathing Zon· Headspace
0	0-4	SB-1	2'6"	---	0-1'6" - No recovery 1'6'-2' - 10 YR 6/4 (Light Yellowish Brown) F. SAND and Silt (SM) moist, loose, well sorted 2-2'1" - 10 YR 3/2 (Very Dark Grayish Brown) F. SAND and Silt (SM) moist, loose, v. well sorted 2'1"-2'7" - 10 YR 5/3 (Brown) F. to M. SAND and Silt (SM) moist, loose, well sorted 2'7"-3'3" - F. to C. SAND and Clay (SC) moist, dense, poorly sorted, low plasticity, mottled	0.2 ppm
					3'3"-4' - 10 YR 6/3 (Pale Brown) F. to M. SAND and Silt (SM) moist, loose, well sorted	
4	4-8	SB-2	4'	---	4-5'5" - 10 YR 6/3 (Pale Brown) F. to M. SAND and Silt (SM) moist, loose, well sorted 5'5"-5'11" - 2.5 Y 6/2 (Light Brownish Gray) F. to M. SAND and Silt (SM) wet, loose, well sorted 5'11"-6'2" - 10 YR 6/8 (Brownish Yellow) F. to M. SAND and Silt (SM) wet, loose, well sorted 6'2"-6'2.5" - 2.5 Y 6/2 (Light Brownish Gray) F. to M. SAND and Silt (SM) wet, loose, well sorted 6'2.5"-6'3" - 10 YR 4/2 (Dark Grayish Brown) Silty CLAY (CL) wet, firm, moderate plasticity 6'3"-6'10" - 2.5 Y 6/2 (Light Brownish Gray) F. to M. SAND and Silt (SM) wet, loose, well sorted 6'10"-7' - 10 YR 4/2 (Dark Grayish Brown) Silty CLAY (CL) wet, firm, moderate plasticity 7'-7'11" - 2.5 Y 6/2 (Light Brownish Gray) F. to M. SAND and Silt (SM) wet, loose, well sorted	5.9 at approx. 7'6" bgs Water table at approx. 4 ft bgs
8	8-12	SB-3	3'	---	7'11"-8' - 10 YR 4/2 (Dark Grayish Brown) Silty CLAY (CL) wet, firm, moderate plasticity 8-9' - No Recovery 9-10' - 2.5 Y 6/2 (Light Brownish Gray) F. to M. SAND and Silt (SM) wet, loose, well sorted 10-12' - 2.5 Y 6/3 (Pale Brown) F. to M. SAND and Silt (SM) wet, loose, well sorted	1.8 ppm at approx. 9'6" bgs
	12-16	SB-4	2'6"	---	12-13'6" - No Recovery 13'6"-15'6" - 2.5 Y 6/2 (Light Brownish Gray) F. to M. SAND and Silt (SM) wet, loose, well sorted 15'6"-16' - 10 YR 3/1 (Very Dark Gray) SII moist, firm, moderate plasticity, v. well sorted	0.1 ppm
					Bottom of Boring at approx. 16 ft bgs	Install IS47IW08D with screened interval at 10.5-15.5 ft bgs

CH2MHILL

PROJECT NUMBER	BORING NUMBER
314138.PT.SI	IS47IW08S SHEET 1 OF 1

SOIL BORING LOG

PROJECT : NSF - Indian Head - Site 47 LOCATION : Indian Head, MD

ELEVATION : DRILLING CONTRACTOR : Parratt-Wolff, Hillsborough, NC

DRILLING METHOD AND EQUIPMENT USED : CME 55 - Direct-Push Technology

WATER LEVELS : START : 1420 4/20/09 END : 1440 4/20/09 LOGGER : I. Zmudzin/PHL

DEPTH BELOW SURFACE (FT)	SAMPLE INTERVAL	SAMPLE NUMBER AND TYPE	SAMPLE RECOVERY (FT)	STANDARD PENETRATION TEST RESULTS 6"-6"-6" (N)	SOIL DESCRIPTION: SOIL NAME, USCS GROUP SYMBOL, COLOR, MOISTURE CONTENT, RELATIVE DENSITY, OR CONSISTENCY, SOIL STRUCTURE, MINERALOGY.	COMMENTS: DEPTH OF CASING, DRILLING RATE, DRILLING FLUID LOSS, TESTS, AND INSTRUMENTATION. OVM (ppm): 3reathing Zon· Headspace
0	0-4	SB-1	2'	---	0-2' - No Recovery 2-3'1" - 10 YR 5/4 (Yellowish Brown) F. SAND and Silt (SM) moist, loose, well sorted 3'1"-4' - 10 YR 7/3 (Very Pale Brown) F. to M. SAND and Silt (SM) moist, loose, well sorted	0.4 ppm
4	4-8	SB-2	4'	---	4-5'4" - 10 YR 7/3 (Very Pale Brown) F. to M. SAND and Silt (SM) moist, loose, well sorted 5'4"-5'5" - 5 Y 5/1 (Gray) F. to M. SAND and Silt (SM) wet, loose, well sorted 5'5"-5'10" - 10 YR 6/8 (Brownish Yellow) F. to M. SAND and Silt (SM) wet, loose, well sorted 5'10"-5'11" - 10 YR 7/1 (Light Gray) F. to M. SAND and Silt (SM) moist, loose, well sorted 5'11"-6'2" - 10 YR 4/2 (Dark Grayish Brown) Silty Clay (CL) wet, firm, moderate plasticity, v. well sorted 6'2"-6'11" - 10 YR 6/2 (Light Brownish Gray) F. to M. SAND and Silt (SM) wet, loose, well sorted 6'11"-7' - 10 YR 4/2 (Dark Grayish Brown) Silty Clay (CL) wet, firm, moderate plasticity, v. well sorted 7'-7'10" - 10 YR 6/2 (Light Brownish Gray) F. to M. SAND and Silt (SM) wet, loose, well sorted	49.2 ppm at approx. 7'10" bgs Water table at approx. 4 ft bgs
8	8-12	SB-3	2'6"	---	7'10"-8' - 10 YR 4/2 (Dark Grayish Brown) Silty Clay (CL) wet, firm, moderate plasticity, v. well sorted 8-9'6" - No Recovery 9'6"-10'6" - 10 YR 6/2 (Light Brownish Gray) F. to M. SAND and Silt (SM) wet, loose, well sorted 10'6"-12' - 10 YR 6/3 (Pale Brown) F. to M. SAND and Silt (SM) moist, loose, v. well sorted	1.9 ppm
					Bottom of Boring at approx. 12 ft bgs	Install IS47IW08S with screened interval at 7-12 ft bgs

CH2MHILL

PROJECT NUMBER	BORING NUMBER	
314138.PT.SI	IS47IW09D	SHEET 1 OF 1

SOIL BORING LOG

PROJECT : NSF - Indian Head - Site 47 LOCATION : Indian Head, MD

ELEVATION : DRILLING CONTRACTOR : Parratt-Wolff, Hillsborough, NC

DRILLING METHOD AND EQUIPMENT USED : CME 55 - Direct-Push Technology

WATER LEVELS : START : 1335 4/21/09 END : 1405 4/21/09 LOGGER : I. Zmudzin/PHL

DEPTH BELOW SURFACE (FT)	SAMPLE INTERVAL	SAMPLE NUMBER AND TYPE	SAMPLE RECOVERY (FT)	STANDARD PENETRATION TEST RESULTS 6"-6"-6"-6" (N)	SOIL DESCRIPTION: SOIL NAME, USCS GROUP SYMBOL, COLOR, MOISTURE CONTENT, RELATIVE DENSITY, OR CONSISTENCY, SOIL STRUCTURE, MINERALOGY.	COMMENTS: DEPTH OF CASING, DRILLING RATE, DRILLING FLUID LOSS, TESTS, AND INSTRUMENTATION. OVM (ppm): 3reathing Zon Headspace
0	0-4	SB-1	3'	---	0-1' - No Recovery 1-2'3" - 10 YR 4/2 (Dark Grayish Brown) F. SAND and Silt (SM) moist, loose, well sorted, wood (root) at approx 2 ft bgs 2'3"-4' - 2.5 Y 6/4 (Light Yellowish Brown) F. SAND and Silt, trace Clay (SM) moist, medium, well sorted	1.3 ppm at approx. 2 ft bgs
4	4-8	SB-2	3'6"	---	4-4'6" - No Recovery 4'6"-4'8" - 2.5 Y 6/4 (Light Yellowish Brown) F. SAND and Silt, trace Clay (SM) moist, medium, well sorted 4'8"-4'9" - 10 YR 4/3 (Brown) F. to M. SAND and Silt (SM) wet, loose, well sorted 4'9"-6'4" - 2.5 Y 7/4 (Pale Yellow) F. to M. SAND and Silt (SM) wet, loose, well sorted 6'4"-6'11" - 10 YR 6/8 (Brownish Yellow) F. SAND and Silt (SM) wet, loose, well sorted 6'11"-7' - 10 YR 3/2 (Very Dark Grayish Brown) Silty CLAY (CL) wet, firm, moderate plasticity, well sorted 7-7'11" - 10 YR 6/2 (Light Brownish Gray) F. SAND and Silt (SM) wet, loose, well sorted 7'11"-8' - 10 YR 3/2 (Very Dark Grayish Brown) Silty CLAY (CL) wet, firm, moderate plasticity, well sorted	0.6 ppm at approx. 7'6" bgs Water table at approx. 4 ft bgs
8	8-12	SB-3	3'	---	8-9' - No Recovery 9-9'6" - 2.5 Y 6/2 (Light Brownish Gray) F. to M. SAND and Silt (SM) wet, loose, well sorted 9'6"-9'10" - 10 YR 3/2 (Very Dark Grayish Brown) Silty CLAY (CL) wet, firm, moderate plasticity, well sorted 9'10"-12' - 2.5 Y 6/2 (Light Brownish Gray) F. to M. SAND and Silt (SM) wet, loose, well sorted	0.3 ppm at approx. 10 ft bgs
12	12-16	SB-4	2'6"	---	12-13'6" - No Recovery 13'6"-15'10" - 2.5 Y 6/2 (Light Brownish Gray) F. to M. SAND and Silt (SM) wet, loose, well sorted 15'10"-16' - 10 YR 3/2 (Very Dark Grayish Brown) SILT (ML) moist, firm, low plasticity, well sorted	0.0 ppm
					Bottom of Boring at approx. 16 ft bgs	Install IS47IW09D with screened interval at 10.5-15.5 ft bgs

CH2MHILL

PROJECT NUMBER	BORING NUMBER	
314138.PT.SI	IS47IW09S	SHEET 1 OF 1

SOIL BORING LOG

PROJECT : NSF - Indian Head - Site 47 LOCATION : Indian Head, MD

ELEVATION : DRILLING CONTRACTOR : Parratt-Wolff, Hillsborough, NC

DRILLING METHOD AND EQUIPMENT USED : CME 55 - Direct-Push Technology

WATER LEVELS : START : 0955 4/17/09 END : 1025 4/17/09 LOGGER : I. Zmudzin/PHL

DEPTH BELOW SURFACE (FT)	SAMPLE INTERVAL	SAMPLE NUMBER AND TYPE	SAMPLE RECOVERY (FT)	STANDARD PENETRATION TEST RESULTS 6"-6"-6" (N)	SOIL DESCRIPTION: SOIL NAME, USCS GROUP SYMBOL, COLOR, MOISTURE CONTENT, RELATIVE DENSITY, OR CONSISTENCY, SOIL STRUCTURE, MINERALOGY.	COMMENTS: DEPTH OF CASING, DRILLING RATE, DRILLING FLUID LOSS, TESTS, AND INSTRUMENTATION. OVM (ppm): 3reathing Zon· Headspace
0	0-4	SB-1	3'	---	0-1' - No Recovery 1-1'11" - 10 YR 4/4 (Dark Yellowish Brown) F. SAND and Silt (SM) moist, loose, well sorted 1'11"-4' - 2.5 Y 7/2 (Light Gray) F. to M. SAND and Silt, trace Clay (SM) moist, medium, well sorted, mottling at 2'11" to 3'10"	0.0 ppm
4	4-8	SB-2	3'6"	---	4-4'6" - No Recovery 4'6"-4'10" - 2.5 Y 7/2 (Light Gray) F. to M. SAND and Silt, trace Clay (SM) moist, medium, well sorted 4'10"-5' - 10 YR 4/3 (Brown) F. to M. SAND and Silt (SM) moist, loose, well sorted 5-6'3" - 10 YR 6/3 (Pale Brown) F. SAND and Silt (SM) wet, loose, v. well sorted 6'3"-6'6" - 10 YR 5/2 (Grayish Brown) F. SAND and Silt (SM) moist, loose, well sorted 6'6"-6'7" - 10 YR 6/8 (Brownish Yellow) F. to M. SAND and Silt (SM) wet, loose, well sorted 6'7"-6'8" - 10 YR 5/2 (Grayish Brown) F. SAND and Silt (SM) moist, loose, well sorted 6'8"-6'9" - 10 YR 6/8 (Brownish Yellow) F. to M. SAND and Silt (SM) wet, loose, well sorted 6'9"-7'1" - 10 YR 3/2 (Very Dark Grayish Brown)	0.0 ppm Water table at approx 5 ft bgs
8	8-12	SB-3	3'6"	---	Silty CLAY (CL) wet, firm, moderate plasticity, v. well sorted 7'1"-7'7" - 2.5 Y 6/2 (Light Brownish Gray) F. SAND and Silt (SM) wet, loose, v. well sorted 7'7"-7'9" - 10 YR 3/2 (Very Dark Grayish Brown) Silty CLAY (CL) wet, firm, moderate plasticity, v. well sorted 7'9"-8' - 2.5 Y 6/2 (Light Brownish Gray) F. SAND and Silt (SM) wet, loose, v. well sorted 8-8'6" - No Recovery 8'6"-9' - 2.5 Y 6/2 (Light Brownish Gray) F. SAND and Silt (SM) wet, loose, v. well sorted 9-9'3" - 10 YR 3/2 (Very Dark Grayish Brown) Silty CLAY (CL) wet, firm, moderate plasticity, v. well sorted 9'3"-10'2" - 2.5 Y 6/2 (Light Brownish Gray) F. to M. SAND and Silt (SM) wet, loose, well sorted	2.5 ppm at approx. 10 ft bgs
					10'2"-12' - 2.5 Y 5/2 (Grayish Brown) F. to M. SAND and Silt (SM) wet, loose, well sorted Bottom of Boring at approx. 12 ft bgs	Install IS47IW09S with screened interval at 7-12 ft bgs

CH2MHILL

PROJECT NUMBER	BORING NUMBER	
314138.PT.SI	IS47IW10D	SHEET 1 OF 1

SOIL BORING LOG

PROJECT : NSF - Indian Head - Site 47 LOCATION : Indian Head, MD
ELEVATION : DRILLING CONTRACTOR : Parratt-Wolff, Hillsborough, NC
DRILLING METHOD AND EQUIPMENT USED : CME 55 - Direct-Push Technology
WATER LEVELS : START : 0930 4/21/09 END : 1045 4/21/09 LOGGER : I. Zmudzin/PHL

DEPTH BELOW SURFACE (FT)	SAMPLE INTERVAL	SAMPLE NUMBER AND TYPE	SAMPLE RECOVERY (FT)	STANDARD PENETRATION TEST RESULTS 6"-6"-6"-6" (N)	SOIL DESCRIPTION: SOIL NAME, USCS GROUP SYMBOL, COLOR, MOISTURE CONTENT, RELATIVE DENSITY, OR CONSISTENCY, SOIL STRUCTURE, MINERALOGY.	COMMENTS: DEPTH OF CASING, DRILLING RATE, DRILLING FLUID LOSS, TESTS, AND INSTRUMENTATION. OVM (ppm): Breathing Zone Headspace
0	0-4	SB-1	3'	---	0-1' - No Recovery 1-1'6" - 10 YR 4/3 (Brown) F. SAND and Silt (SM) moist, loose, well sorted 1'6"-4' - 2.5 Y 6/6 (Olive Yellow) F. to M. SAND and Silt (SM) moist, loose, well sorted	0.0 ppm
4	4-8	SB-2	3'	---	4-5' - No Recovery 5-5'3" - 2.5 Y 6/6 (Olive Yellow) F. to M. SAND and Silt (SM) moist, loose, well sorted 5'3"-6'11" - 2.5 Y 7/4 (Pale Yellow) F. to M. SAND and Silt (SM) wet, loose, well sorted 6'11"-7'2" - 2.5 Y 6/2 (Light Brownish Gray) F. to M. SAND and Silt (SM) wet, loose, well sorted 7'2"-7'5" - 10 YR 6/8 (Brownish Yellow) F. to M. SAND and Silt (SM) wet, loose, well sorte 7'5"7'7" - 10 YR 4/2 (Dark Grayish Brown) Silty CLAY (CL) wet, firm, moderate plasticity, well sorted 7'7"-8' - 10 YR 5/1 (Gray) F. to M. SAND and Silt (SM) wet, loose, well sorted	0.0 ppm Water table at approx. 5.5 ft bgs
8	8-12	SB-3	3'6"	---	8-8'6" - No Recovery 8'6"-9' - 10 YR 5/1 (Gray) F. to M. SAND and Silt (SM) wet, loose, well sorted 9-9'3" - 10 YR 4/2 (Dark Grayish Brown) Silty CLAY (CL) wet, firm, moderate plasticity, well sorted 9'3"-9'10" - 2.5 Y 6/2 (Light Brownish Gray) F. to M. SAND and Silt (SM) wet, loose, well sorted 9'10"-10' - 10 YR 4/2 (Dark Grayish Brown) Silty CLAY (CL) wet, firm, moderate plasticity, well sorted 10-12' - 2.5 Y 6/2 (Light Brownish Gray) F. to M. SAND and Silt (SM) wet, loose, well sorted	0.0 ppm
12	12-16	SB-4	3'6"	---	12-12'6" - No Recovery 12'6"-16' - 10 YR 5/1 (Gray) F. to M. SAND and Silt (SM) wet, loose, v. well sorted	0.0 ppm
16	16-18	SB-5	2'	---	16-16'6" - 10 YR 5/1 (Gray) F. to M. SAND and Silt (SM) wet, loose, v. well sorted 16'6"-17'9" - 10 YR 3/1 (Very Dark Gray) Silty CLAY (CL) moist, firm, moderate plasticity, v. well sorted 17'9"-18' - 10 YR 5/2 (Grayish Brown) CLAY (CL) moist, stiff, high plasticity, v. well sorted	0.0 ppm
					Bottom of Boring at approx. 18 ft bgs	Install IS47IW10D with screened interval at 11-16 ft bgs

CH2MHILL

PROJECT NUMBER	BORING NUMBER	
314138.PT.SI	IS47IW10S	SHEET 1 OF 1

SOIL BORING LOG

PROJECT : NSF - Indian Head - Site 47 LOCATION : Indian Head, MD
ELEVATION : DRILLING CONTRACTOR : Parratt-Wolff, Hillsborough, NC
DRILLING METHOD AND EQUIPMENT USED : CME 55 - Direct-Push Technology
WATER LEVELS : START : 0810 4/21/09 END : 0830 4/21/09 LOGGER : I. Zmudzin/PHL

DEPTH BELOW SURFACE (FT)	SAMPLE INTERVAL	SAMPLE NUMBER AND TYPE	SAMPLE RECOVERY (FT)	STANDARD PENETRATION TEST RESULTS 6"-6"-6"-6" (N)	SOIL DESCRIPTION: SOIL NAME, USCS GROUP SYMBOL, COLOR, MOISTURE CONTENT, RELATIVE DENSITY, OR CONSISTENCY, SOIL STRUCTURE, MINERALOGY.	COMMENTS: DEPTH OF CASING, DRILLING RATE, DRILLING FLUID LOSS, TESTS, AND INSTRUMENTATION. OVM (ppm): Breathing Zone Headspace
0	0-4	SB-1	3'	---	0-1' - No Recovery 1-1'10" - 10 YR 3/2 (Very Dark Grayish Brown) F. to M. SAND ans Silt (SM) trace organics (roots), moist, loose, well sorted 1'10"-4' - 10 YR 6/6 (Brownish Yellow) F. SAND and Silt (SM) moist, loose, well sorted	0.0 ppm
4	4-8	SB-2	3'6"	---	4-4'6" - No Recovery 4'6"-4'10" - 10 YR 6/6 (Brownish Yellow) F. SAND and Silt (SM) moist, loose, well sorted 4'10"-6'1" - 2.5 Y 7/4 (Pale Yellow) F. SAND and Silt (SM) wet, loose, well sorted 6'1"-6'8" - 2.5 Y 6/8 (Olive Yellow) F. SAND and Silt (SM) wet, loose, well sorted, laminated 6'8"-7'2" - 10 YR 6/8 (Brownish Yellow) F. to M. SAND and Silt (SM) wet, loose, well sorted, laminated 7'2"-7'4" - 10 YR 4/2 (Dark Grayish Brown) Silty CLAY (CL) wet, firm, moderate plasticity, well sorted 7'4"-8' - 2.5 Y 6/2 (Light Grayish Brown) F. to M. SAND and Silt (SM) wet, loose, well sorted	0.0 ppm Water table at approx 5 ft bgs
8	8-12	SB-3	3'6"	---	8-8'6" - No Recovery 8'6"-8'9" - 2.5 Y 6/2 (Light Grayish Brown) F. to M. SAND and Silt (SM) wet, loose, well sorted 8'9"-9' - 10 YR 4/2 (Dark Grayish Brown) Silty CLAY (CL) wet, firm, moderate plasticity, well sorted 9-9'5" - 2.5 Y 6/2 (Light Grayish Brown) F. to M. SAND and Silt (SM) wet, loose, well sorted 9'5"-9'8" - 10 YR 4/2 (Dark Grayish Brown) Silty CLAY (CL) wet, firm, moderate plasticity, well sorted 9'8"-12' - 2.5 Y 6/2 (Light Grayish Brown) F. to M. SAND and Silt (SM) wet, loose, well sorted	0.0 ppm
					Bottom of Boring at approx. 12 ft bgs	Install IS47IW10S with screened interval at 7-12 ft bgs

CH2MHILL

PROJECT NUMBER	BORING NUMBER	
314138.PT.SI	IS47IW11D	SHEET 1 OF 1

SOIL BORING LOG

PROJECT : NSF - Indian Head - Site 47 LOCATION : Indian Head, MD

ELEVATION : DRILLING CONTRACTOR : Parratt-Wolff, Hillsborough, NC

DRILLING METHOD AND EQUIPMENT USED : CME 55 - Direct-Push Technology

WATER LEVELS : START : 1345 4/14/09 END : 1455 4/14/09 LOGGER : I. Zmudzin/PHL

DEPTH BELOW SURFACE (FT)	SAMPLE INTERVAL	SAMPLE NUMBER AND TYPE	SAMPLE RECOVERY (FT)	STANDARD PENETRATION TEST RESULTS 6"-6"-6"-6" (N)	SOIL DESCRIPTION: SOIL NAME, USCS GROUP SYMBOL, COLOR, MOISTURE CONTENT, RELATIVE DENSITY, OR CONSISTENCY, SOIL STRUCTURE, MINERALOGY.	COMMENTS: DEPTH OF CASING, DRILLING RATE, DRILLING FLUID LOSS, TESTS, AND INSTRUMENTATION. OVM (ppm): 3reathing Zon· Headspace
0	0-4	SB-1	2'10"	---	0-1'2" - No Recovery 1'2"-1'6" - Topsoil and Organics (grass) 1'6"-2'6" - 10 YR 5/4 (Yellowish Brown) F. SAND and Silt (SM) moist, loose, well sorted, laminated 2'6"-2'9" - 10 YR 5/3 (Brown) F. SAND and Silt (SM) moist, loose, well sorted 2'9"-4' - @.5 Y 7/4 (Pale Yellow) F. SAND and Silt (SM) moist, loose, well sorted	0.1 ppm
4	4-8	SB-2	4'	---	4-4'10" - 2.5 Y 4/4 (Olive Brown) F. to M. SAND and Silt (SM) wet, loose, well sorted 4'10"-5'8" - 2.5 Y 7/4 (Pale Yellow) F. to M. SAND and Silt (SM) wet, loose, well sorted 5'8"-6'2" - 2.5 Y 7/8 (Yellow) F. to M. SAND and Silt (SM) wet, loose, well sorted, laminated 6'2"-8' - 5 Y 5/2 (Olive Gray) F. SAND and Silt (SM) wet, loose, well sorted, lens of Silty CLAY (10 YR 4/2) (CL) at 7'2" to 7'3" and in shoe of macrocore, wet, moderate plasticity, medium density	0.2 ppm Water table at approx. 4 ft bgs
8	8-12	SB-3	3'	---	8-9'3" - 5 Y 5/2 (Olive Gray) F. SAND and Silt (SM) wet, loose, well sorted 9'3"-11' - 2.5 Y 6/2 (Light Brownish Gray) F. SAND and Silt (SM) wet, loose, well sorted 11-12' - No Recovery	0.1 ppm
12	12-16	SB-4	2'8"	---	12-13'4" - No recovery 13'4"-15' - 2.5 Y 6/2 (Light Brownish Gray) F. SAND and Silt (SM) wet, loose, well sorted 15-16' - 10 YR 3/2 (Very Dark Grayish Brown) SILT (ML) moist to dry, medium, well sorted, low plasticity	0.1 ppm
					Bottom of Boring at approx. 16 ft bgs	Install IS47IW11D with screened interval at 10-15 ft bgs

CH2MHILL

PROJECT NUMBER	BORING NUMBER	
314138.PT.SI	IS47IW11S	SHEET 1 OF 1

SOIL BORING LOG

PROJECT : NSF - Indian Head - Site 47 LOCATION : Indian Head, MD

ELEVATION : DRILLING CONTRACTOR : Parratt-Wolff, Hillsborough, NC

DRILLING METHOD AND EQUIPMENT USED : CME 55 - Direct-Push Technology

WATER LEVELS : START : 0900 4/15/09 END : 0920 4/15/09 LOGGER : I. Zmudzin/PHL

DEPTH BELOW SURFACE (FT)	SAMPLE INTERVAL	SAMPLE NUMBER AND TYPE	SAMPLE RECOVERY (FT)	STANDARD PENETRATION TEST RESULTS 6"-6"-6" (N)	SOIL DESCRIPTION: SOIL NAME, USCS GROUP SYMBOL, COLOR, MOISTURE CONTENT, RELATIVE DENSITY, OR CONSISTENCY, SOIL STRUCTURE, MINERALOGY.	COMMENTS: DEPTH OF CASING, DRILLING RATE, DRILLING FLUID LOSS, TESTS, AND INSTRUMENTATION. OVM (ppm): 3reathing Zon Headspace
0	0-4	SB-1	3'6"	---	0-6" - No Recovery 6"-11" - 10 YR 5/4 (Yellowish Brown) F. SAND and Silt (SM) moist, loose, well sorted, trace organics (roots) 11"-1'3" - 2.5 Y 6/4 (Light Yellowish Brown) F. to M. SAND and Silt (SM) moist, medium, well sorted, mottled 1'3"-2'1" - 10 YR 4/2 (Dark Grayish Brown) V. F. SAND and Silt (SM) moist, dense, well sorted,	0.0 ppm
					2'1"-4' - 10 YR 7/3 (V. Pale Brown) F. to M. SAND and Silt (SM) moist, loose, v. well sorted	
4	4-8	SB-2	4'	---	4-5'2" - 10 YR 7/3 (V. Pale Brown) F. to M. SAND and Silt (SM) wet, loose, v. well sorted 5'2"-5'3" - 10 YR 7/1 (Light Gray) F. to M. SAND and Silt (SM) wet, loose, well sorted 5'3"-5'7" - 10 YR 6/6 (Brownish Yellow) F. to M. SAND and Silt (SM) wet, loose, well sorted 5'7"-5'8" - 10 YR 7/1 (Light Gray) F. to M. SAND and Silt (SM) wet, loose, well sorted 5'8"-5'10" - 10 YR 6/6 (Brownish Yellow) F. to M. SAND and Silt (SM) wet, loose, well sorted 5'10"-5'11" - 10 YR 7/1 (Light Gray) F. to M. SAND and Silt (SM) wet, loose, well sorted 5'11"-6'2" - 10 YR 4/2 (Dark Grayish Brown) Silty CLAY (CL) wet, firm, moderate plasticity, well sorted 6'2"-6'10" - 10 YR 6/2 (Light Brownish Gray) F. to M. SAND and Silt (SM) wet, loose, well sorted	0.1 ppm Water table at approx. 4 ft bgs
8	8-12	SB-3	3'	---	6'10"-7' - 10 YR 4/2 (Dark Grayish Brown) Silty CLAY (CL) wet, firm, moderate plasticity, well sorted 7'-7'10" - 10 YR 6/2 (Light Brownish Gray) F. to M. SAND and Silt (SM) wet, loose, well sorted 7'10"-8' - 10 YR 4/2 (Dark Grayish Brown) Silty CLAY (CL) wet, firm, moderate plasticity, well sorted 8-9' - No Recovery 9-10' - 2.5 Y 6/2 (Light Brownish Gray) F. SAND and Silt (SM) wet, loose, v. well sorted 10-12' - 2.5 Y 5/2 (Grayish Brown) F. SAND and Silt (SM) wet, loose, v. well sorted	4.1 ppm at approx. 9'6" bgs
					Bottom of Boring at approx. 12 ft bgs	Install IS47IW11S with screened interval at 7-12 ft bgs

CH2MHILL

PROJECT NUMBER	BORING NUMBER	
314138.PT.SI	IS47IW12D	SHEET 1 OF 1

SOIL BORING LOG

PROJECT : NSF - Indian Head - Site 47 LOCATION : Indian Head, MD

ELEVATION : DRILLING CONTRACTOR : Parratt-Wolff, Hillsborough, NC

DRILLING METHOD AND EQUIPMENT USED : CME 55 - Direct-Push Technology

WATER LEVELS : START : 0810 4/17/09 END : 0845 4/17/09 LOGGER : I. Zmudzin/PHL

DEPTH BELOW SURFACE (FT)	SAMPLE INTERVAL	SAMPLE NUMBER AND TYPE	SAMPLE RECOVERY (FT)	STANDARD PENETRATION TEST RESULTS 6"-6"-6"-6" (N)	SOIL DESCRIPTION: SOIL NAME, USCS GROUP SYMBOL, COLOR, MOISTURE CONTENT, RELATIVE DENSITY, OR CONSISTENCY, SOIL STRUCTURE, MINERALOGY.	COMMENTS: DEPTH OF CASING, DRILLING RATE, DRILLING FLUID LOSS, TESTS, AND INSTRUMENTATION. OVM (ppm): 3reathing Zon· Headspace
0	0-4	SB-1	2'6"	---	0-1'6" - No Recovery 1'6"-2'2" - 10 YR 4/4 (Dark Yellowish Brown) F. to M. SAND and Silt (SM) moist, loose, well sorted 2'2"-3'2" - 2.5 Y 6/4 (Light Yellowish Brown) F. SAND and Silt (SM) moist, loose, well sorted 3'2"-3'5" - 10 YR 5/8 (Yellowish Brown) F. SAND and Silt (SM) moist, loose, well sorted 3'5"-4' - 10 YR 6/4 (Light Yellowish Brown) F. SAND and Silt (SM) moist, loose, well sorted	0.0 ppm
4	4-8	SB-2	3'6"	---	4-4'6" - No Recovery 4'6"-5'8" - 10 YR 6/4 (Light Yellowish Brown) F. SAND and Silt (SM) wet, loose, well sorted 5'8"-5'9" - 10 YR 5/8 (Yellowish Brown) F. to M. SAND and Silt (SM) wet, loose, well sorted 5'9"-6'1" - 2.5 Y 7/2 (Light Gray) F. to M. SAND and Silt (SM) wet, loose, v. well sorted 6'1"-6'8" - 2.5 Y 6/2 (Light Brownish Gray) F. SAND and Silt (SM) wet, loose, v. well sorted 6'8"-6'9" - 10 YR 4/2 (Dark Grayish Brown) Silty CLAY (CL) wet, firm, moderate plasticity, v. well sorted 6'9"-7'10" - 2.5 Y 6/2 (Light Brownish Gray) F. SAND and Silt (SM) wet, loose, v. well sorted 7'10"-8' - !0 YR 4/2 (Dark Grayish Brown) Silty CLAY (CL) wet, firm, moderate plasticity, v. well sorted	0.0 ppm Water table at approx. 4 ft bgs
8	8-12	SB-3	2'6"	---	8-9'6" - No Recovery 9'6"-11' - 2.5 Y 6/2 (Light Brownish Gray) F.SAND and Silt (SM) wet, loose, well sorted 11-12' - 2.5 Y 5/2 (Grayish Brown) F. to M. SAND and Silt (SM) wet, loose, well sorted	0.0 ppm
12	12-16	SB-4	2'	---	12-14' - No Recovery 14-15'9" - 2.5 Y 5/2 (Grayish Brown) F. to M. SAND and Silt (SM) wet, loose, well sorted 15'9"-16' - 10 YR 3/2 (Very Dark Grayish Brown) Silty CLAY (CL) moist, firm, moderate plasticity, v. well sorted	0.0 ppm
					Bottom of Boring at approx. 16 ft bgs	Install IS47IW12D with screened interval at 11-16 ft bgs

CH2MHILL

PROJECT NUMBER	BORING NUMBER	
314138.PT.SI	IS47IW12S	SHEET 1 OF 1

SOIL BORING LOG

PROJECT : NSF - Indian Head - Site 47 LOCATION : Indian Head, MD

ELEVATION : DRILLING CONTRACTOR : Parratt-Wolff, Hillsborough, NC

DRILLING METHOD AND EQUIPMENT USED : CME 55 - Direct-Push Technology

WATER LEVELS : START : 0845 4/14/09 END : 0905 4/14/09 LOGGER : I. Zmudzin/PHL

DEPTH BELOW SURFACE (FT)	SAMPLE INTERVAL	SAMPLE NUMBER AND TYPE	SAMPLE RECOVERY (FT)	STANDARD PENETRATION TEST RESULTS 6"-6"-6"-6" (N)	SOIL DESCRIPTION: SOIL NAME, USCS GROUP SYMBOL, COLOR, MOISTURE CONTENT, RELATIVE DENSITY, OR CONSISTENCY, SOIL STRUCTURE, MINERALOGY.	COMMENTS: DEPTH OF CASING, DRILLING RATE, DRILLING FLUID LOSS, TESTS, AND INSTRUMENTATION. OVM (ppm): Breathing Zone Headspace
0	0-4	SB-1	3'6"	---	0-6" - No Recovery 6"-1'6" - 5 YR 5/6 (Yellowish Red) F. SAND and Silt (SM) moist, loose, well sorted 1'6"-2'7" 2.5 Y 7/2 (Light Gray) F. SAND and Silt (SM) moist, loose, well sorted 2'7"-4' - 2.5 Y 6/4 (Light Yellowish Brown) F. SAND and Silt (SM) moist, loose, well sorted, mottled	0.0 ppm
4	4-8	SB-2	4'	---	4-5'4" - 2.5 Y 6/4 (Light Yellowish Brown) F. SAND and Silt (SM) wet, loose, well sorted, mottled 5'4"-6' - 2.5 Y 6/6 (Olive Yellow) F. to M. SAND and Silt (SM) wet, loose, well sorted 6-8' - 5 Y 6/2 (Light Olive Gray) F. SAND and Silt with Clay lenses at 6'3"-6'4", 6'11"-7', and 7'10"-7'11", Clay is 10 YR 3/2 (Very Dark Grayish Brown) wet, plastic, medium (SM and CL)	0.0 ppm Water table at approx. 4 ft bgs
8	8-12	SB-3	3'	---	8-9' - No Recovery 9-10'5" - 2.5 Y 6/2 (Light Grayish Brown) F. to M. SAND and Silt (SM) wet, loose, well sorted 10'5"-12' - 2.5 Y 6/4 (Light Yellowish Brown) F. to M. SAND and Silt (SM) wet, loose, well sorted	0.6 ppm at approx. 11'6" bgs
					Bottom of Boring at approx. 12 ft bgs	Install IS47IW12S with screened interval at 7-12 ft bgs

CH2MHILL

PROJECT NUMBER	BORING NUMBER
314138.PT.SI	IS47IW13D SHEET 1 OF 1

SOIL BORING LOG

PROJECT : NSF - Indian Head - Site 47 LOCATION : Indian Head, MD
ELEVATION : DRILLING CONTRACTOR : Parratt-Wolff, Hillsborough, NC
DRILLING METHOD AND EQUIPMENT USED : CME 55 - Direct-Push Technology
WATER LEVELS : START : 1515 4/16/09 END : 1555 4/16/09 LOGGER : I. Zmudzin/PHL

DEPTH BELOW SURFACE (FT)	SAMPLE INTERVAL	SAMPLE NUMBER AND TYPE	SAMPLE RECOVERY (FT)	STANDARD PENETRATION TEST RESULTS 6"-6"-6" (N)	SOIL DESCRIPTION: SOIL NAME, USCS GROUP SYMBOL, COLOR, MOISTURE CONTENT, RELATIVE DENSITY, OR CONSISTENCY, SOIL STRUCTURE, MINERALOGY.	COMMENTS: DEPTH OF CASING, DRILLING RATE, DRILLING FLUID LOSS, TESTS, AND INSTRUMENTATION. OVM (ppm): Breathing Zone Headspace
0	0-4	SB-1	3'	---	0-1' - No Recovery 1-1'6" - 10 YR 6/3 (Pale Brown) F. SAND and Silt (SM) moist, loose, well sorted 1'6"-2'3" - 10 YR 4/3 (Brown) F. to M. SAND and Silt (SM) moist, loose, well sorted 2'3"-4' - 2.5 YR 6/8 (Olive Yellow) F. to M. SAND and Silt (SM) moist, loose, well sorted	0.0 ppm
4	4-8	SB-2	3'6"	---	4-4'6" - No Recovery 4'6"-5' - 2.5 YR 6/8 (Olive Yellow) F. to M. SAND and Silt (SM) moist, loose, well sorted 5-5'3" - 2.5 Y 5/4 (Light Olive Brown) F. SAND and Silt (SM) moist, loose, well sorted 5'3"-5'9" - 10 YR 6/6 (Brownish Yellow) F. to M. SAND and Silt (SM) wet, loose, well sorted 5'9"-6'1" - 2.5 Y 7/2 (Light Gray) F. SAND and Silt (SM) wet, loose, well sorted 6'1"-7'3" - 10 YR 6/6 (Brownish Yellow) F. to M. SAND and Silt (SM) wet, loose, well sorted 7'3"-7'8" - 2.5 Y 6/2 (Light Brownish Gray) F. SAND and Silt (SM) wet, loose, well sorted 7'8"-7'10" - 2.5 Y 6/8 (Olive Yellow) F. SAND and Silt (SM) wet, loose, well sorted 7'10"-8' - 10 YR 4/2 (Dark Grayish Brown) Clayey SILT (ML) wet, firm, moderate plasticity	0.0 ppm Water table at approx. 5'6" bgs
8	8-12	SB-3	3'	---	8-9' - No Recovery 9-9'3" - 2.5 Y 6/2 (Light Brownish Gray) F. to M. SAND and Silt (SM) wet, loose, v. well sorted 9'3"-9'6" - 10 YR 5/2 (Grayish Brown) Silty CLAY (CL) wet, firm, v. well sorted, moderate plasticity 9'6"-10'2" - 2.5 Y 6/2 (Light Brownish Gray) F. to M. SAND and Silt (SM) wet, loose, v. well sorted 10'2"-10'4" - 10 YR 5/2 (Grayish Brown) Silty CLAY (CL) wet, firm, v. well sorted, moderate plasticity 10'4"-12' - 2.5 Y 6/2 (Light Brownish Gray) F. to M. SAND and Silt (SM) wet, loose, v. well sorted	0.1 ppm
12	12-16	SB-4	3'6"	---	12-12'6" - No Recovery 12'6"-16' - 2.5 Y 6/2 (Light Brownish Gray) F. to M. SAND and Silt (SM) wet, loose, v. well sorted, Silty CLAY lens at 14'11"-15' bgs and 15'3"-15'4" bgs	0.0 ppm
16	16-18	SB-5	2'	---	16-16'6" - 2.5 Y 6/2 (Light Brownish Gray) F. to M SAND and Silt (SM) wet, loose, v. well sorted 16'6"-18' - 10 YR 3/2 (Very Dark Grayish Brown) SILT (ML) moist, firm, v. well sorted, low plasticity	0.0 ppm
					Bottom of Boring at approx. 18 ft bgs	Install IS47IW13D with screened inte 11.5-16.5 ft bgs

CH2MHILL

PROJECT NUMBER	BORING NUMBER	
314138.PT.SI	IS47IW13S	SHEET 1 OF 1

SOIL BORING LOG

PROJECT : NSF - Indian Head - Site 47 LOCATION : Indian Head, MD

ELEVATION : DRILLING CONTRACTOR : Parratt-Wolff, Hillsborough, NC

DRILLING METHOD AND EQUIPMENT USED : CME 55 - Direct-Push Technology

WATER LEVELS : START : 1425 4/15/09 END : 1450 4/15/09 LOGGER : I. Zmudzin/PHL

DEPTH BELOW SURFACE (FT)	SAMPLE INTERVAL	SAMPLE NUMBER AND TYPE	SAMPLE RECOVERY (FT)	STANDARD PENETRATION TEST RESULTS 6"-6"-6"-6" (N)	SOIL DESCRIPTION: SOIL NAME, USCS GROUP SYMBOL, COLOR, MOISTURE CONTENT, RELATIVE DENSITY, OR CONSISTENCY, SOIL STRUCTURE, MINERALOGY.	COMMENTS: DEPTH OF CASING, DRILLING RATE, DRILLING FLUID LOSS, TESTS, AND INSTRUMENTATION. OVM (ppm): 3reathing Zon· Headspace
0	0-4	SB-1	2'6"	---	0-1'6" - No Recovery 1'6"-2'3" - 2.5 Y 5/4 (Light Olive Brown) F. SAND and Silt (SM) moist, loose, well sorted, trace organics (roots) 2'3"-4' - 2.5 Y 6/8 (Olive Yellow) F. SAND and Silt (SM) moist, loose, well sorted, laminated at 3'9" to 4'	0.0 ppm
4	4-8	SB-2	3'	---	4-5' - No Recovery 5-6'6" - 2.5 Y 6/8 (Olive Yellow) F. SAND and Silt (SM) wet, loose, well sorted 6'6"-6'11" - 10 YR 6/8 (Brownish Yellow) F. SAND and Silt (SM) wet, loose, well sorted, laminated 6'11"-7'11" - 10 YR 7/1 (Light Gray) F. to M. SAND and Silt (SM) wet, loose, v. well sorted 7'11"-8' - 10 YR 4/2 (Dark Grayish Brown) Silty CLAY (CL) wet, soft, moderate plasticity. v. well sorted	0.0 ppm Water table at approx. 4 ft bgs
8	8-12	SB-3	3'6"	---	8-8'6" - No Recovery 8'6"-9'2" - 10 YR 7/1 (Light Gray) F. to M. SAND and Silt (SM) wet, loose, v. well sorted 9'2"-9'4" - 10 YR 4/2 (Dark Grayish Brown) Silty CLAY (CL) wet, firm, moderate plasticity, v. well sorted 9'4"-12' - 10 YR 7/1 (Light Gray) F. to M. SAND and Silt (SM) wet, loose, v. well sorted	10.3 ppm
					Bottom of Boring at approx. 12 ft bgs	Install IS47IW13S with screened interval at 7-12 ft bgs

CH2MHILL

PROJECT NUMBER	BORING NUMBER	
314138.PT.SI	IS47IW14D	SHEET 1 OF 1

SOIL BORING LOG

PROJECT : NSF - Indian Head - Site 47 LOCATION : Indian Head, MD

ELEVATION : DRILLING CONTRACTOR : Parratt-Wolff, Hillsborough, NC

DRILLING METHOD AND EQUIPMENT USED : CME 55 - Direct-Push Technology

WATER LEVELS : START : 1035 4/15/09 END : 1110 4/15/09 LOGGER : I. Zmudzin/PHL

DEPTH BELOW SURFACE (FT)	SAMPLE INTERVAL	SAMPLE NUMBER AND TYPE	SAMPLE RECOVERY (FT)	STANDARD PENETRATION TEST RESULTS 6"-6"-6"-6" (N)	SOIL DESCRIPTION: SOIL NAME, USCS GROUP SYMBOL, COLOR, MOISTURE CONTENT, RELATIVE DENSITY, OR CONSISTENCY, SOIL STRUCTURE, MINERALOGY.	COMMENTS: DEPTH OF CASING, DRILLING RATE, DRILLING FLUID LOSS, TESTS, AND INSTRUMENTATION. OVM (ppm): 3reathing Zon· Headspace
0	0-4	SB-1	3'	---	0-1' - No Recovery 1-1'7" - 10 YR 5/6 (Yellowish Brown) FILL 1'7"-1'9" - 10 YR 4/2 (Dark Grayish Brown) F. SAND and Silt (SM) moist, dense, well sorted 1'9"-2'2" - 10 YR 3/1 (Very Dark Gray) F. SAND and Silt (SM) moist, loose, well sorted 2'2"-4' - 10 YR 7/3 (Very Pale Brown) F. SAND and Silt (SM) moist, loose, v. well sorted	0.2 ppm
4	4-8	SB-2	4'	---	4-5'3" - 10 YR 7/3 (Very Pale Brown) F. SAND and Silt (SM) wet, loose, v. well sorted 5'3"-5'6" - 10 YR 6/6 (Brownish Yellow) F. SAND and Silt (SM) wet, loose, well sorted 5'6"-5'11" - 5 Y 6/1 (Light Gray) F. SAND and Silt (SM) wet, loose, well sorted 5'11"-6' - 10 YR 4/2 (Dark Grayish Brown) Silty CLAY (CL) wet, firm, moderate plasticitty, v. well sorted 6-6'8" - 10 YR 7/1 (Light Gray) F. to M. SAND and Silt (SM) wet, loose, well sorted 6'8"-6'10" - 10 YR 4/2 (Dark Grayish Brown) Silty CLAY (CL) wet, firm, moderate plasticity, v. well sorted 6'10"-7'6" - 10 YR 7/1 (Light Gray) F. to M. SAND and Silt (SM) wet, loose, well sorted 7'6"-7'8" - 10 YR 4/2 (Dark Grayish Brown) Silty CLAY (CL) wet, firm, moderate plasticity, v. well sorted 7'8"-8' - 10 YR 7/1 (Light Gray) F. to M. SAND and Silt (SM) wet, loose, well sorted	0.2 ppm Water table at approx. 4 ft bgs
8	8-12	SB-3	3'	---	8-9' - No Recovery 9-12' - 5 Y 6/2 (Light Olive Gray) F. to M. SAND and Silt (SM) wet, loose, v. well sorted	0.4 ppm
12	12-16	SB-4	2'	---	12-14' - No Recovery 14-15'6" - 5 Y 6/2 (Light Olive Gray) F. to M. SAND and Silt (SM) wet, loose, v. well sorted 15'6"-16' - 10 YR 4/1 (Dark Gray) SILT (ML) moist, firm, moderate plasticity, v. well sorted	0.0 ppm
16	16-18	SB-5	2'	---	16-18' - 10 YR 5/2 (Grayish Brown) CLAY (CL) moist, dense, v. stiff, moderate plasticity, trace organics throughout, Sand in bottom 2"	0.1 ppm
					Bottom of Boring at approx. 18 ft bgs	Install IS47IW14D with screened interval at 10-15 ft bgs

CH2MHILL

PROJECT NUMBER	BORING NUMBER
314138.PT.SI	IS47IW14S SHEET 1 OF 1

SOIL BORING LOG

PROJECT : NSF - Indian Head - Site 47 LOCATION : Indian Head, MD

ELEVATION : DRILLING CONTRACTOR : Parratt-Wolff, Hillsborough, NC

DRILLING METHOD AND EQUIPMENT USED : CME 55 - Direct-Push Technology

WATER LEVELS : START : 1100 4/14/09 END : 1120 4/14/09 LOGGER : I. Zmudzin/PHL

DEPTH BELOW SURFACE (FT)	SAMPLE INTERVAL	SAMPLE NUMBER AND TYPE	SAMPLE RECOVERY (FT)	STANDARD PENETRATION TEST RESULTS 6"-6"-6"-6" (N)	SOIL DESCRIPTION: SOIL NAME, USCS GROUP SYMBOL, COLOR, MOISTURE CONTENT, RELATIVE DENSITY, OR CONSISTENCY, SOIL STRUCTURE, MINERALOGY.	COMMENTS: DEPTH OF CASING, DRILLING RATE, DRILLING FLUID LOSS, TESTS, AND INSTRUMENTATION. OVM (ppm): Breathing Zone Headspace
0	0-4	SB-1	3'6"	---	0-6" - No Recovery 6"-1'7" - 10 YR 5/4 (Yellowish Brown) F. SAND and Silt (SM) moist, loose, well sorted 1'7"-2'3" - 2.5 Y 7/2 (Light Gray) F. SAND and Silt (SM) moist, loose, well sorted 2'3"-4' - 2.5 Y 6/8 (Olive Yellow) F. SAND and Silt (SM) moist, loose, well sorted, mottled	0.0 ppm
4	4-8	SB-2	4'	---	4-5'3" - 2.5 Y 6/8 (Olive Yellow) F. SAND and Silt (SM) wet, loose, well sorted 5'3"-5'8" - 2.5 Y 7/6 (Yellow) F. to M. SAND and Silt (SM) wet, loose, well sorted 5'8"-5'8.5" - 2.5 Y 8/0 (White) F. SAND and Silt (SM) wet, loose, well sorted 5'8.5"-6'2" - 10 YR 4/2 (Dark Grayish Brown) Silty CLAY (CL) wet, medium, moderate plasticity 6'2"-8' - 10 YR 5/1 (Gray) F. to M. SAND and Silt (SM) wet, loose, well sorted, CLAY lenses at 6'10"-6'11" bgs and 7'10"-7'11" bgs	0.1 ppm Water table at approx. 4 ft bgs
8	8-12	SB-3	3'6"	---	8-8'6" - No Recovery 8'6"-9'9" - 10 YR 5/1 (Gray) F. to M. SAND and Silt (SM) wet, loose, well sorted 9'9"-12' - 2.5 Y 6/2 (Light Brownish Gray) F. to M. SAND and Silt (SM) wet, loose, well sorted	7.3 ppm at approx. 8'9" bgs
					Bottom of Boring at approx. 12 ft bgs	Install IS47IW14S with screened interval at 7-12 ft bgs

CH2MHILL

PROJECT NUMBER	BORING NUMBER
314138.PT.SI	IS47SB20/IS47MW19 SHEET 1 OF 1

SOIL BORING LOG

PROJECT : NSF - Indian Head - Site 47 LOCATION : Indian Head, MD

ELEVATION : DRILLING CONTRACTOR : Parratt-Wolff, Hillsborough, NC

DRILLING METHOD AND EQUIPMENT USED : CME 55 - Direct-Push Technology

WATER LEVELS : START : 1015 4/29/09 END : 1045 4/29/09 LOGGER : I. Zmudzin/PHL

DEPTH BELOW SURFACE (FT)	SAMPLE INTERVAL	SAMPLE NUMBER AND TYPE	SAMPLE RECOVERY (FT)	STANDARD PENETRATION TEST RESULTS 6"-6"-6"-6" (N)	SOIL DESCRIPTION: SOIL NAME, USCS GROUP SYMBOL, COLOR, MOISTURE CONTENT, RELATIVE DENSITY, OR CONSISTENCY, SOIL STRUCTURE, MINERALOGY.	COMMENTS: DEPTH OF CASING, DRILLING RATE, DRILLING FLUID LOSS, TESTS, AND INSTRUMENTATION. OVM (ppm): 3reathing Zon· Headspace
0					0-7 ft bgs - Air-Knife and Vacuum Extraction	Water table at approx. 5 ft bgs
7	7-11	SB-1	3'	---	7-8' - No Recovery 8-8'8" - 10 YR 6/8 (Brownish Yellow) F. to M. SAND and Silt (SM) wet, loose, well sorted 8'8"-8'11" - 10 YR 4/2 (Dark Grayish Brown) Silty CLAY (CL) wet, firm, moderate plasticity, well sorted 8'11"-9'6" - 2.5 Y 6/2 (Light Brownish Gray) F. to M. SAND and Silt (SM) wet, loose, well sorte 9'6"-9'8" - 10 YR 4/2 (Dark Grayish Brown) Silty CLAY (CL) wet, firm, moderate plasticity, well sorted 9'8"-10'4" - 2.5 Y 6/2 (Light Brownish Gray) F. to M. SAND and Silt (SM) wet, loose, well sorted 10'4"-10'7" - 10 YR 4/2 (Dark Grayish Brown) Silty CLAY (CL) wet, firm, moderate plasticity, well sorted 10'7"-11' - 2.5 Y 6/2 (Light Brownish Gray) F. to M. SAND and Silt (SM) wet, loose, well sorted	2.7 ppm at approx. 10.5 ft bgs IS47SB20-0809 (VOCs) 1020 IS47SB20-0912 (VOCs) 1025
11	11-15	SB-2	3'	---	11-12' - No Recovery 12-13'7" - 2.5 Y 6/2 (Light Brownish Gray) F. to M. SAND and Silt (SM) wet, loose, well sorted 13'7"-14'4" - 2.5 Y 5/4 (Light Olive Brown) F. SAND and Silt (SM) wet, loose, well sorted 14'4"-15' - 2.5 Y 6/2 (Light Brownish Gray) F. to M. SAND and Silt (SM) wet, loose, well sorted	0.2 ppm IS47SB20-12-15 (VOCs) 1030 IS47SB20P-12-15 (VOCs) DUP
15	15-18	SB-3	3'	---	15-17' - 2.5 Y 6/2 (Light Brownish Gray) F. to M. SAND and Silt (SM) wet, loose, well sorted 17-18' - 10 YR 3/2 (Very Dark Grayish Brown) Silty CLAY (CL) moist, stiff, high plasticity, very well sorted	0.1 ppm IS47SB20-15-17 (VOCs) 1035 IS47SB20-0817 (Metals/TOC) 1040 IS47SB20P-0817 (Metals/TOC) DUP
					Bottom of Boring at approx. 18 ft bgs	Install IS47MW19 with screened interval at 7-17 ft bgs

CH2MHILL

PROJECT NUMBER	BORING NUMBER
314138.PT.SI	IS47SB21/IS47MW20 SHEET 1 OF 1

SOIL BORING LOG

PROJECT : NSF - Indian Head - Site 47 LOCATION : Indian Head, MD

ELEVATION : DRILLING CONTRACTOR : Parratt-Wolff, Hillsborough, NC

DRILLING METHOD AND EQUIPMENT USED : CME 55 - Direct-Push Technology

WATER LEVELS : START : 0820 4/29/09 END : 0855 4/29/09 LOGGER : I. Zmudzin/PHL

DEPTH BELOW SURFACE (FT)	SAMPLE INTERVAL	SAMPLE NUMBER AND TYPE	SAMPLE RECOVERY (FT)	STANDARD PENETRATION TEST RESULTS 6"-6"-6"-6" (N)	SOIL DESCRIPTION: SOIL NAME, USCS GROUP SYMBOL, COLOR, MOISTURE CONTENT, RELATIVE DENSITY, OR CONSISTENCY, SOIL STRUCTURE, MINERALOGY.	COMMENTS: DEPTH OF CASING, DRILLING RATE, DRILLING FLUID LOSS, TESTS, AND INSTRUMENTATION. OVM (ppm): Breathing Zone Headspace
0					0-7 ft bgs - Air-Knife and Vacuum Extraction	Water table at approx. 5 ft bgs
7	7-11	SB-1	3'	---	7-8' - No Recovery 8-8'10" - 10 YR 6/6 (Brownish Yellow) F. to M. SAND and Silt (SM) wet, loose, well sorted 8'10"-9' - 2.5 Y 5/6 (Light Olive Brown) F. to M. SAND and Silt (SM) wet, loose, well sorte 9-9'3" - 10 YR 6/8 (Brownish Yellow) F. to M. SAND and Silt (SM) wet, loose, well sorted 9'3"-9'11" - 2.5 6/2 (Light Brownish Gray) F. SAND and Silt (SM) wet, loose, well sorted 9'11"-10'2" - 10 YR 4/2 (Dark Grayish Brown) Silty CLAY (CL) wet, firm, moderate plasticity, well sorted 10'2"-11' - 2.5 Y 6/2 (Light Brownish Gray) F. SAND and Silt (SM) wet, loose, well sorted	0.1 ppm IS47SB21-0809 (VOCs) 0825 IS47SB21-0912 (VOCs) 0830
11	11-15	SB-2	3'6"	---	11-11'6" - No Recovery 11'6"-15" - 2.5 Y 6/2 (Light Brownish Gray) F. SAND and Silt (SM) wet, loose, well sorted	0.0 ppm IS47SB21-1215 (VOCs) 0835, MS/MS
15	15-18	SB-3	3'	---	15-17'6" - 2.5 Y 6/2 (Light Brownish Gray) F. SAND and Silt (SM) wet, loose, well sorted 17'6"-18' - 10 YR 3/2 (Very Dark Gray Brown) SILT (ML) moist, firm, low plasticity, well sortec	0.0 ppm IS47SB21-1518 (VOCs) 0840 IS47SB21-0818 (Metals/TOC) 0845, MS/MSD
					Bottom of Boring at approx. 18 ft bgs	Install IS47MW20 with screened interval at 7.5-17.5 ft bgs

CH2MHILL

PROJECT NUMBER	BORING NUMBER
314138.PT.SI	IS47SB22/IS47MW21 SHEET 1 OF 1

SOIL BORING LOG

PROJECT : NSF - Indian Head - Site 47 LOCATION : Indian Head, MD

ELEVATION : DRILLING CONTRACTOR : Parratt-Wolff, Hillsborough, NC

DRILLING METHOD AND EQUIPMENT USED : CME 55 - Direct-Push Technology

WATER LEVELS : START : 0935 4/29/09 END : 1005 4/29/09 LOGGER : I. Zmudzin/PHL

DEPTH BELOW SURFACE (FT)	SAMPLE INTERVAL	SAMPLE NUMBER AND TYPE	SAMPLE RECOVERY (FT)	STANDARD PENETRATION TEST RESULTS 6"-6"-6"-6" (N)	SOIL DESCRIPTION: SOIL NAME, USCS GROUP SYMBOL, COLOR, MOISTURE CONTENT, RELATIVE DENSITY, OR CONSISTENCY, SOIL STRUCTURE, MINERALOGY.	COMMENTS: DEPTH OF CASING, DRILLING RATE, DRILLING FLUID LOSS, TESTS, AND INSTRUMENTATION. OVM (ppm): Breathing Zone Headspace
0					0-7 ft bgs - Air-Knife and Vacuum Extraction	Water table at approx. 5 ft bgs
7	7-11	SB-1	3'	---	7-8' - No Recovery 8-9' - 2.5 Y 6/8 (Olive Yellow) F. to M. SAND and Silt (SM) wet, loose, well sorted 9-9'4" - 10 YR 6/8 (Brownish Yellow) F. to M. SAND and Silt (SM) wet, loose, well sorted 9'4"-9'7" - 10 YR 4/2 (Dark Grayish Brown) Silty CLAY (CL) wet, firm, moderate plasticity, well sorted 9'7"-10'1" - 2.5 Y 6/2 (Light Brownish Gray) F. to M. SAND and Silt (SM) wet, loose, well sorted 10'1"-10'3" - 10 YR 4/2 (Dark Grayish Brown) Silty CLAY (CL) wet, firm, moderate plasticity, well sorted 10'3"-11' - 2.5 Y 6/2 (Light Brownish Gray) F. to M. SAND and Silt (SM) wet, loose, well sorted	0.0 ppm IS47SB22-0809 (VOCs) 0940 IS47SB22-0912 (VOCs) 0945
11	11-15	SB-2	3'6"	---	11-11'6" - No Recovery 11'6"-12' - 10 YR 4/2 (Dark Grayish Brown) Silty CLAY (CL) wet, firm, moderate plasticity, well sorted 12-15' - 2.5 Y 6/2 (Light Brownish Gray) F. to M. SAND and Silt (SM) wet, loose, well sorted	0.0 ppm IS47SB22-1215 (VOCs) 0950
15	15-18	SB-3	3'	---	15-17'11" - 2.5 Y 6/2 (Light Brownish Gray) F. to M. SAND and Silt (SM) wet, loose, well sorted 17'11"-18' - 10 YR 4/2 (Dark Grayish Brown) Silty CLAY (CL) wet, firm, moderate plasticity, well sorted	0.1 ppm IS47SB22-1518 (VOCs) 0955 IS47SB22-0818 (Metals/TOC) 1000
					Bottom of Boring at approx. 18 ft bgs	Install IS47MW21 with screened interval at 8-18 ft bgs

CH2MHILL

PROJECT NUMBER	BORING NUMBER
314138.PT.SI	IS47SB23/IS47MW24 SHEET 1 OF 1

SOIL BORING LOG

PROJECT : NSF - Indian Head - Site 47 LOCATION : Indian Head, MD

ELEVATION : DRILLING CONTRACTOR : Parratt-Wolff, Hillsborough, NC

DRILLING METHOD AND EQUIPMENT USED : CME 55 - Direct-Push Technology

WATER LEVELS : START : 0905 4/16/09 END : 0950 4/16/09 LOGGER : I. Zmudzin/PHL

DEPTH BELOW SURFACE (FT)	SAMPLE INTERVAL	SAMPLE NUMBER AND TYPE	SAMPLE RECOVERY (FT)	STANDARD PENETRATION TEST RESULTS 6"-6"-6"-6" (N)	SOIL DESCRIPTION: SOIL NAME, USCS GROUP SYMBOL, COLOR, MOISTURE CONTENT, RELATIVE DENSITY, OR CONSISTENCY, SOIL STRUCTURE, MINERALOGY.	COMMENTS: DEPTH OF CASING, DRILLING RATE, DRILLING FLUID LOSS, TESTS, AND INSTRUMENTATION. OVM (ppm): Breathing Zone Headspace
0	0-4	SB-1	3'	---	0-1' - No Recovery 1-2' - 10 YR 4/3 (Brown) F. to M. SAND and Silt (SM) moist, loose, well sorted 2-4' - 2.5 Y 7/6 (Yellow) F. to M. SAND and Silt (SM) moist, loose, well sorted	0.0 ppm
	4-8	SB-2	3'	---	4-5' - No Recovery 5-6'10" - 2.5 Y 7/6 (Yellow) F. to M. SAND and Silt (SM) wet, loose, well sorted 6'10"-7'2" - 10 YR 7/8 (Yellow) F. to M. SAND and Silt (SM) wet, loose, very well sorted 7'2"-8' - 10 YR 7/2 (Light Gray) F. SAND and Silt (SM) wet, loose, very well sorted	0.0 ppm Water table at approx. 5'6" bgs IS47SB23-0609 (VOCs) 0915
5	8-12	SB-3	3'	---	8-9' - No Recovery 9-9'5" - 10 YR 7/2 (Light Gray) F. SAND and Silt Silt (SM) wet, loose, very well sorted 9'5"-9'8" - 10 YR 5/1 (Gray) Silty CLAY (CL) wet, firm, well sorted, moderate plasticity 9'8"-12' - 10 YR 7/2 (Light Gray) F. to M. SAND and Silt (SM) wet, loose, well sorted	0.0 ppm IS47SB23-0912 (VOCs) 0920
10	12-16	SB-4	3'	---	12-16' - 10 YR 7/2 (Light Gray) F. to M. SAND and Silt (SM) wet, loose, well sorted	0.0 ppm IS47SB23-1215 (VOCs) 0930 IS47SB23-1517 (VOCs) 0935
15	16-18	SB-5	2'	---	16-18' - 10 YR 3/2 (Very Dark Grayish Brown) Silty CLAY (CL) moist, stiff, moderate plasticity, very well sorted	0.0 ppm IS47SB23-0617 (Metals/TOC) 0945
20					Bottom of Boring at 18 ft bgs	Install IS47MW24 with screened interval at 6-16 ft bgs
25						
30						

PROJECT NUMBER	WELL NUMBER		
314138.PT.SI	**IS47IW01D**	SHEET 1	OF 1

CH2MHILL

WELL COMPLETION DIAGRAM

PROJECT : NSF - Indian Head - Site 47 LOCATION : Indian Head, MD

DRILLING CONTRACTOR : Parratt-Wolff, Hillsborough, NC

DRILLING METHOD AND EQUIPMENT USED : CME 55 - Direct-Push Technology

WATER LEVELS : START : 1315 5/1/09 END : LOGGER : I. Zmudzin/PHL

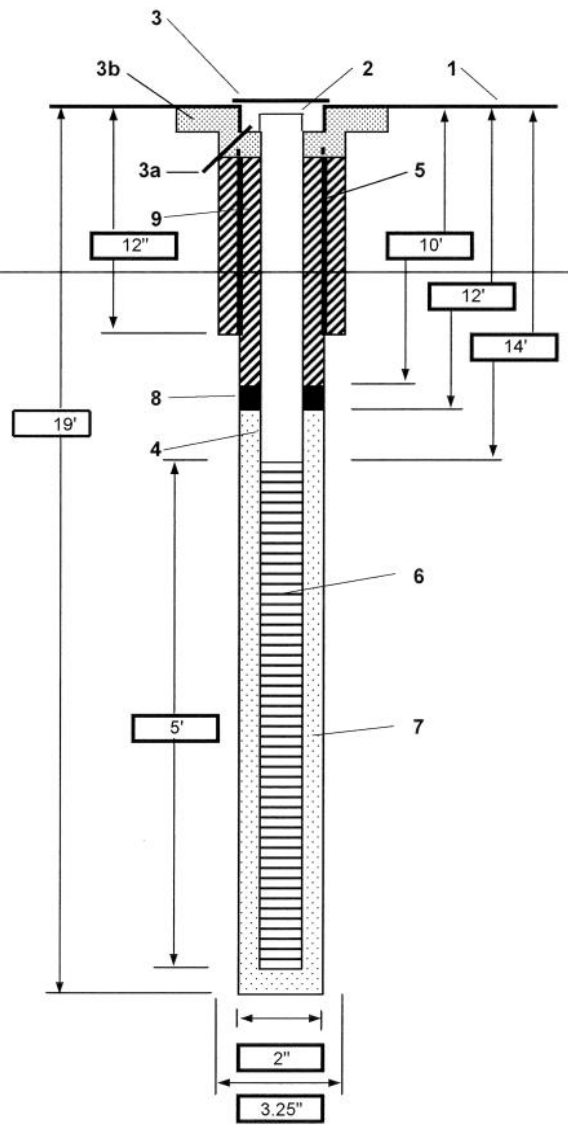

1- Ground elevation at well _____

2- Top of casing elevation _____

3- Wellhead protection cover type: 18" Stainless Steel Roadbox
   a) drain tube?: N/A
   b) concrete pad dimensions: 24" Circular Concrete Pad

4- ~~Dia./type of well casing~~: ~~2" diameter PVC Schedule 40~~

5- Dia./type surface casing: N/A

6- Type/slot/size of screen: 2" diameter PVC Schedule 40
   0.020 Continuous Johnson Vee-Wire Screen

7- Type screen filter: #1 Sand
   a) Quantity used: 3 50 lb bags

8- Type of seal: Medium Bentonite Chips
   a) Quantity used: 1 40 lb bag

9- Grout
   a) Grout mix used: Portland Cement/Bentonite Mix
   b) Method of placement: _____
   c) Vol.of surface casing grout: _____
   d) Vol. of well casing grout: _____

Development method _____

Development time _____

Estimated purge volume _____

Comments _____

PROJECT NUMBER	WELL NUMBER		
314138.PT.SI	**IS47IW01S**	SHEET 1	OF 1

CH2MHILL

WELL COMPLETION DIAGRAM

PROJECT : NSF - Indian Head - Site 47 LOCATION : Indian Head, MD

DRILLING CONTRACTOR : Parratt-Wolff, Hillsborough, NC

DRILLING METHOD AND EQUIPMENT USED : CME 55 - Direct-Push Technology

WATER LEVELS : START : 1430 5/1/09 END : LOGGER : I. Zmudzin/PHL

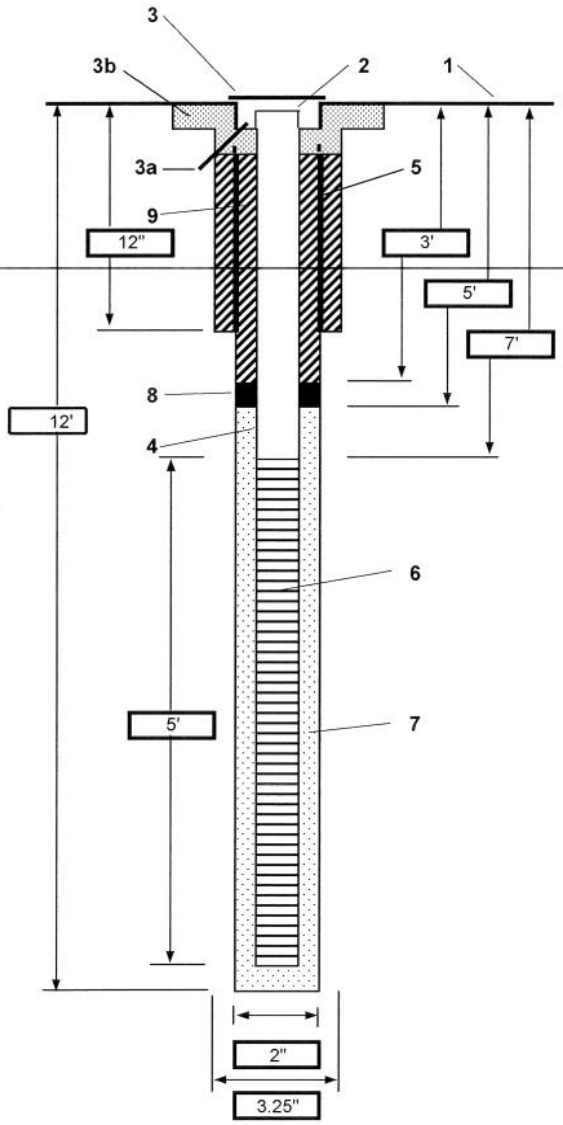

1- Ground elevation at well _____

2- Top of casing elevation _____

3- Wellhead protection cover type: 18" Stainless Steel Roadbox
   a) drain tube?: N/A
   b) concrete pad dimensions: 24" Circular Concrete Pad

4- ~~Dia./type of well casing~~: ~~2" diameter PVC Schedule 40~~

5- Dia./type surface casing: N/A

6- Type/slot/size of screen: 2" diameter PVC Schedule 40
   0.020 Continuous Johnson Vee-Wire Screen

7- Type screen filter: #1 Sand
   a) Quantity used: 3 50 lb bags

8- Type of seal: Medium Bentonite Chips
   a) Quantity used: 1 40 lb bag

9- Grout
   a) Grout mix used: Portland Cement/Bentonite Mix
   b) Method of placement: _____
   c) Vol.of surface casing grout: _____
   d) Vol. of well casing grout: _____

Development method _____

Development time _____

Estimated purge volume _____

Comments _____

PROJECT NUMBER	WELL NUMBER		
314138.PT.SI	**IS47IW02D**	SHEET 1	OF 1

CH2MHILL

WELL COMPLETION DIAGRAM

PROJECT : NSF - Indian Head - Site 47 LOCATION : Indian Head, MD

DRILLING CONTRACTOR : Parratt-Wolff, Hillsborough, NC

DRILLING METHOD AND EQUIPMENT USED : CME 55 - Direct-Push Technology

WATER LEVELS : START : 1600 4/29/09 END : LOGGER : I. Zmudzin/PHL

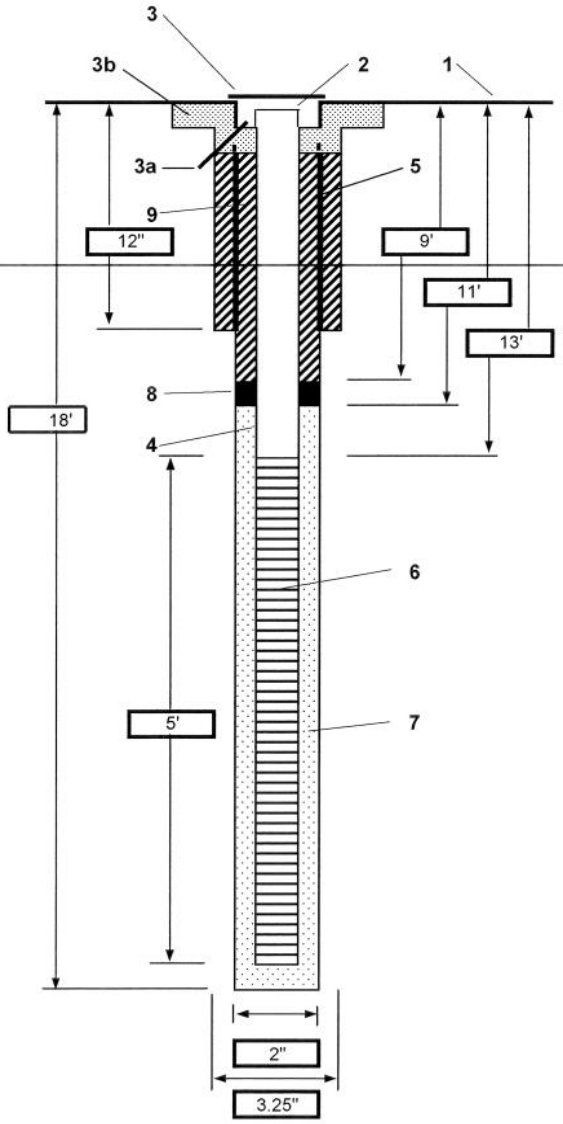

1- Ground elevation at well _____

2- Top of casing elevation _____

3- Wellhead protection cover type: 18" Stainless Steel Roadbox
   a) drain tube? N/A
   b) concrete pad dimensions: 24" Circular Concrete Pad

4- Dia./type of well casing: 2" diameter PVC Schedule 40

5- Dia./type surface casing: N/A

6- Type/slot/size of screen: 2" diameter PVC Schedule 40
   0.020 Continuous Johnson Vee-Wire Screen

7- Type screen filter: #1 Sand
   a) Quantity used: 3 50 lb bags

8- Type of seal: Medium Bentonite Chips
   a) Quantity used: 1 40 lb bag

9- Grout
   a) Grout mix used: Portland Cement/Bentonite Mix
   b) Method of placement _____
   c) Vol.of surface casing grout _____
   d) Vol. of well casing grout _____

Development method _____

Development time _____

Estimated purge volume _____

Comments _____

PROJECT NUMBER	WELL NUMBER		
314138.PT.SI	**IS47IW02S**	SHEET 1	OF 1

CH2MHILL

WELL COMPLETION DIAGRAM

PROJECT : NSF - Indian Head - Site 47 LOCATION : Indian Head, MD

DRILLING CONTRACTOR : Parratt-Wolff, Hillsborough, NC

DRILLING METHOD AND EQUIPMENT USED : CME 55 - Direct-Push Technology

WATER LEVELS : START : 0815 4/30/09 END : LOGGER : I. Zmudzin/PHL

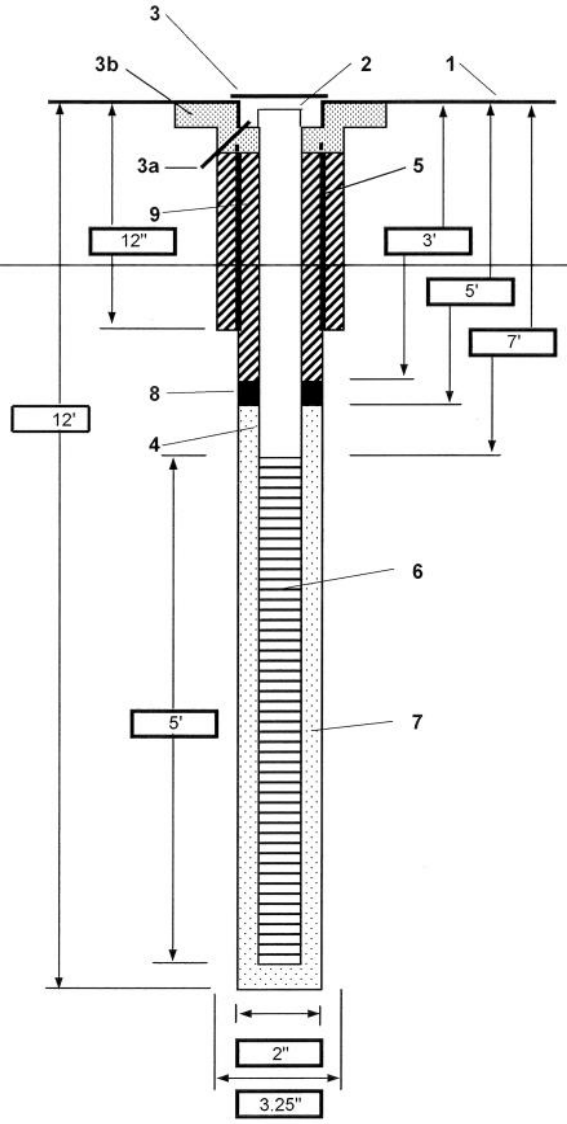

1- Ground elevation at well _____

2- Top of casing elevation _____

3- Wellhead protection cover type: 18" Stainless Steel Roadbox
   a) drain tube?: N/A
   b) concrete pad dimensions: 24" Circular Concrete Pad

~~4- Dia./type of well casing~~: ~~2" diameter PVC Schedule 40~~

5- Dia./type surface casing: N/A

6- Type/slot/size of screen: 2" diameter PVC Schedule 40
   0.020 Continuous Johnson Vee-Wire Screen

7- Type screen filter: #1 Sand
   a) Quantity used: 3 50 lb bags

8- Type of seal: Medium Bentonite Chips
   a) Quantity used: 1 40 lb bag

9- Grout
   a) Grout mix used: Portland Cement/Bentonite Mix
   b) Method of placement: _____
   c) Vol.of surface casing grout: _____
   d) Vol. of well casing grout: _____

Development method _____

Development time _____

Estimated purge volume _____

Comments _____

PROJECT NUMBER	WELL NUMBER		
314138.PT.SI	**IS47IW03D**	SHEET 1	OF 1

CH2MHILL

WELL COMPLETION DIAGRAM

PROJECT : NSF - Indian Head - Site 47 LOCATION : Indian Head, MD

DRILLING CONTRACTOR : Parratt-Wolff, Hillsborough, NC

DRILLING METHOD AND EQUIPMENT USED : CME 55 - Direct-Push Technology

WATER LEVELS : START : 1525 4/30/09 END : LOGGER : I. Zmudzin/PHL

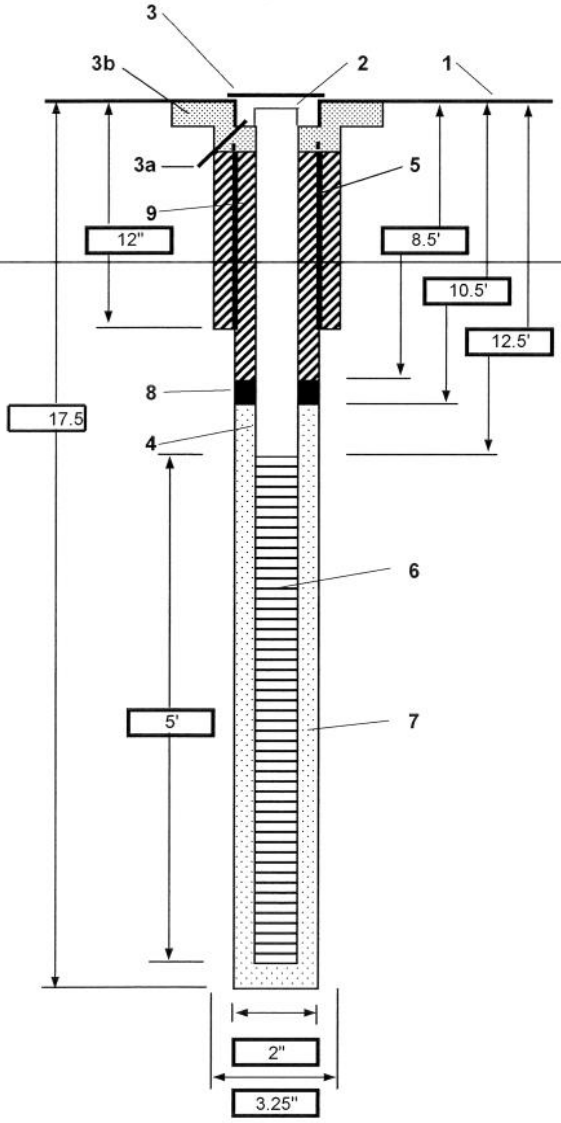

1- Ground elevation at well _____

2- Top of casing elevation _____

3- Wellhead protection cover type: 18" Stainless Steel Roadbox
   a) drain tube? N/A
   b) concrete pad dimensions: 24" Circular Concrete Pad

4- Dia./type of well casing: 2" diameter PVC Schedule 40

5- Dia./type surface casing: N/A

6- Type/slot/size of screen: 2" diameter PVC Schedule 40
   0.020 Continuous Johnson Vee-Wire Screen

7- Type screen filter: #1 Sand
   a) Quantity used: 3 50 lb bags

8- Type of seal: Medium Bentonite Chips
   a) Quantity used: 1 40 lb bag

9- Grout
   a) Grout mix used: Portland Cement/Bentonite Mix
   b) Method of placement _____
   c) Vol.of surface casing grout _____
   d) Vol. of well casing grout _____

Development method _____

Development time _____

Estimated purge volume _____

Comments _____

PROJECT NUMBER	WELL NUMBER		
314138.PT.SI	**IS47IW03S**	SHEET 1	OF 1

CH2MHILL

WELL COMPLETION DIAGRAM

PROJECT : NSF - Indian Head - Site 47 LOCATION : Indian Head, MD

DRILLING CONTRACTOR : Parratt-Wolff, Hillsborough, NC

DRILLING METHOD AND EQUIPMENT USED : CME 55 - Direct-Push Technology

WATER LEVELS : START : 0820 5/1/09 END : LOGGER : I. Zmudzin/PHL

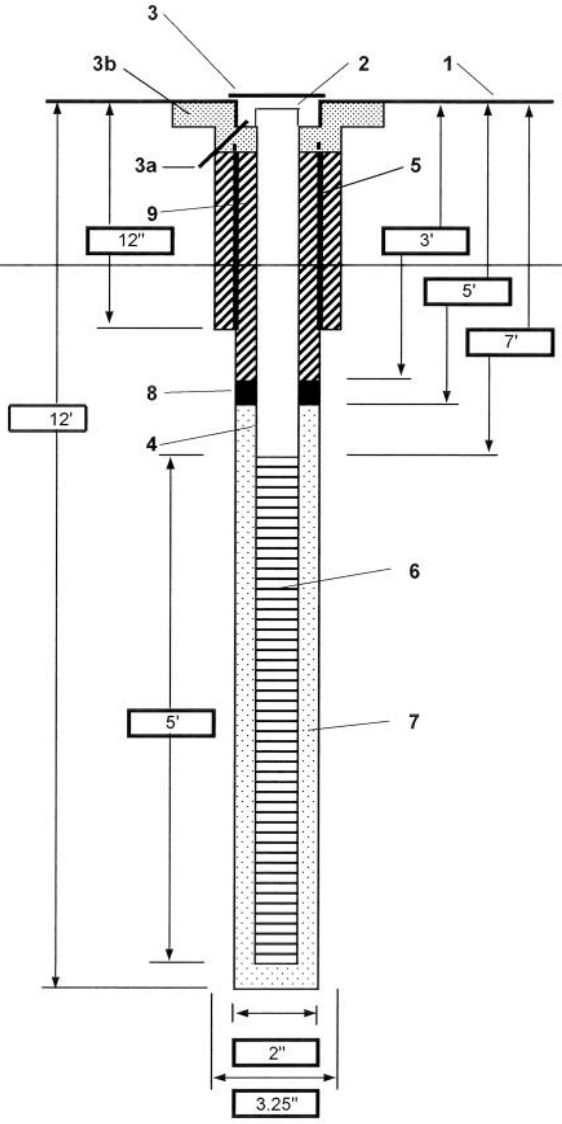

1- Ground elevation at well _____

2- Top of casing elevation _____

3- Wellhead protection cover type: 18" Stainless Steel Roadbox
   a) drain tube? N/A
   b) concrete pad dimensions: 24" Circular Concrete Pad

4- Dia./type of well casing: 2" diameter PVC Schedule 40

5- Dia./type surface casing: N/A

6- Type/slot/size of screen: 2" diameter PVC Schedule 40
   0.020 Continuous Johnson Vee-Wire Screen

7- Type screen filter: #1 Sand
   a) Quantity used: 3 50 lb bags

8- Type of seal: Medium Bentonite Chips
   a) Quantity used: 1 40 lb bag

9- Grout
   a) Grout mix used: Portland Cement/Bentonite Mix
   b) Method of placement _____
   c) Vol.of surface casing grout _____
   d) Vol. of well casing grout _____

Development method _____

Development time _____

Estimated purge volume _____

Comments _____

PROJECT NUMBER	WELL NUMBER		
314138.PT.SI	**IS47IW04D**	SHEET 1	OF 1

CH2MHILL

WELL COMPLETION DIAGRAM

PROJECT : NSF - Indian Head - Site 47 LOCATION : Indian Head, MD

DRILLING CONTRACTOR : Parratt-Wolff, Hillsborough, NC

DRILLING METHOD AND EQUIPMENT USED : CME 55 - Direct-Push Technology

WATER LEVELS : START : 1535 5/1/09 END : LOGGER : I. Zmudzin/PHL

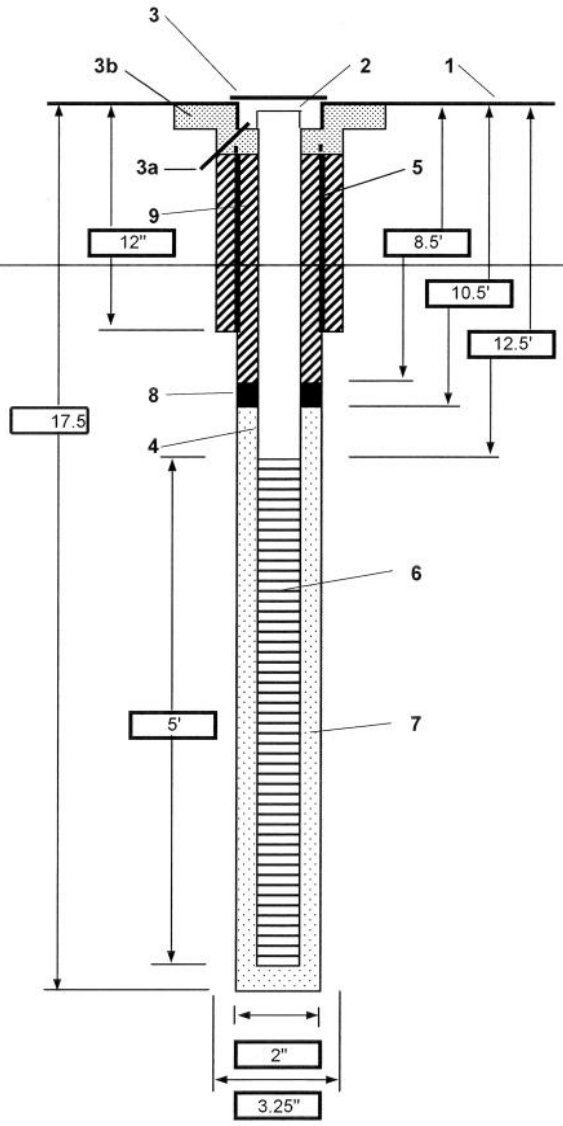

1- Ground elevation at well _____

2- Top of casing elevation _____

3- Wellhead protection cover type: 18" Stainless Steel Roadbox
   a) drain tube? N/A
   b) concrete pad dimensions: 24" Circular Concrete Pad

4- Dia./type of well casing: 2" diameter PVC Schedule 40

5- Dia./type surface casing: N/A

6- Type/slot/size of screen: 2" diameter PVC Schedule 40
   0.020 Continuous Johnson Vee-Wire Screen

7- Type screen filter: #1 Sand
   a) Quantity used: 3 50 lb bags

8- Type of seal: Medium Bentonite Chips
   a) Quantity used: 1 40 lb bag

9- Grout
   a) Grout mix used: Portland Cement/Bentonite Mix
   b) Method of placement _____
   c) Vol.of surface casing grout _____
   d) Vol. of well casing grout _____

Development method _____

Development time _____

Estimated purge volume _____

Comments _____

PROJECT NUMBER	WELL NUMBER		
314138.PT.SI	**IS47IW04S**	SHEET 1	OF 1

CH2MHILL

WELL COMPLETION DIAGRAM

PROJECT : NSF - Indian Head - Site 47 LOCATION : Indian Head, MD

DRILLING CONTRACTOR : Parratt-Wolff, Hillsborough, NC

DRILLING METHOD AND EQUIPMENT USED : CME 55 - Direct-Push Technology

WATER LEVELS : START : 0955 5/1/09 END : LOGGER : I. Zmudzin/PHL

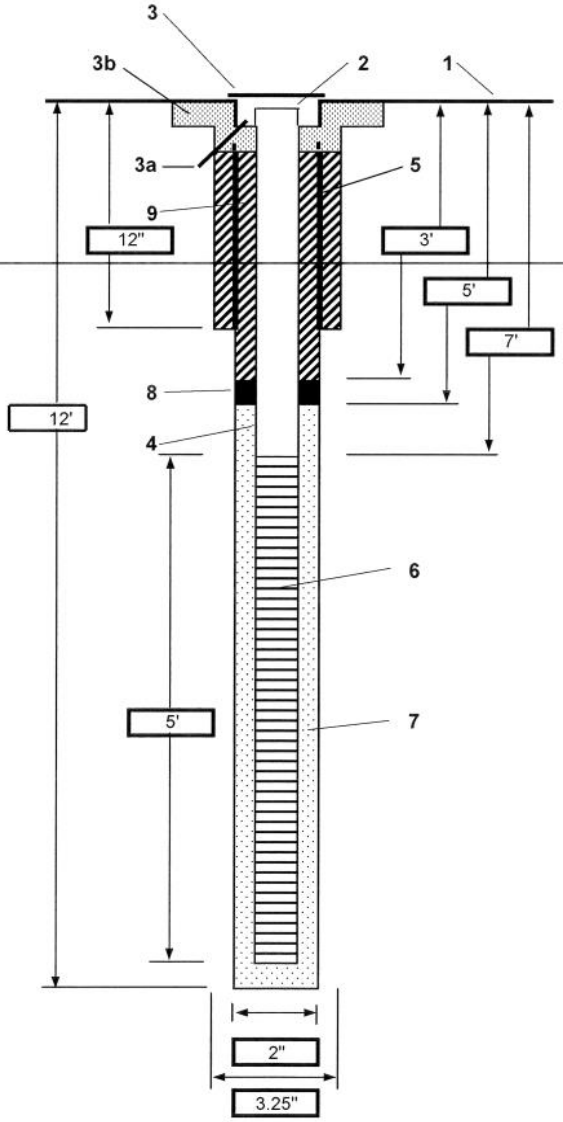

1- Ground elevation at well _____

2- Top of casing elevation _____

3- Wellhead protection cover type: 18" Stainless Steel Roadbox
   a) drain tube? N/A
   b) concrete pad dimensions: 24" Circular Concrete Pad

4- Dia./type of well casing: 2" diameter PVC Schedule 40

5- Dia./type surface casing: N/A

6- Type/slot/size of screen: 2" diameter PVC Schedule 40
   0.020 Continuous Johnson Vee-Wire Screen

7- Type screen filter: #1 Sand
   a) Quantity used: 3 50 lb bags

8- Type of seal: Medium Bentonite Chips
   a) Quantity used: 1 40 lb bag

9- Grout
   a) Grout mix used: Portland Cement/Bentonite Mix
   b) Method of placement _____
   c) Vol.of surface casing grout _____
   d) Vol. of well casing grout _____

Development method _____

Development time _____

Estimated purge volume _____

Comments _____

PROJECT NUMBER	WELL NUMBER		
314138.PT.SI	**IS47IW05D**	SHEET 1	OF 1

CH2MHILL

WELL COMPLETION DIAGRAM

PROJECT : NSF - Indian Head - Site 47 LOCATION : Indian Head, MD

DRILLING CONTRACTOR : Parratt-Wolff, Hillsborough, NC

DRILLING METHOD AND EQUIPMENT USED : CME 55 - Direct-Push Technology

WATER LEVELS : START : 1315 4/29/09 END : LOGGER : I. Zmudzin/PHL

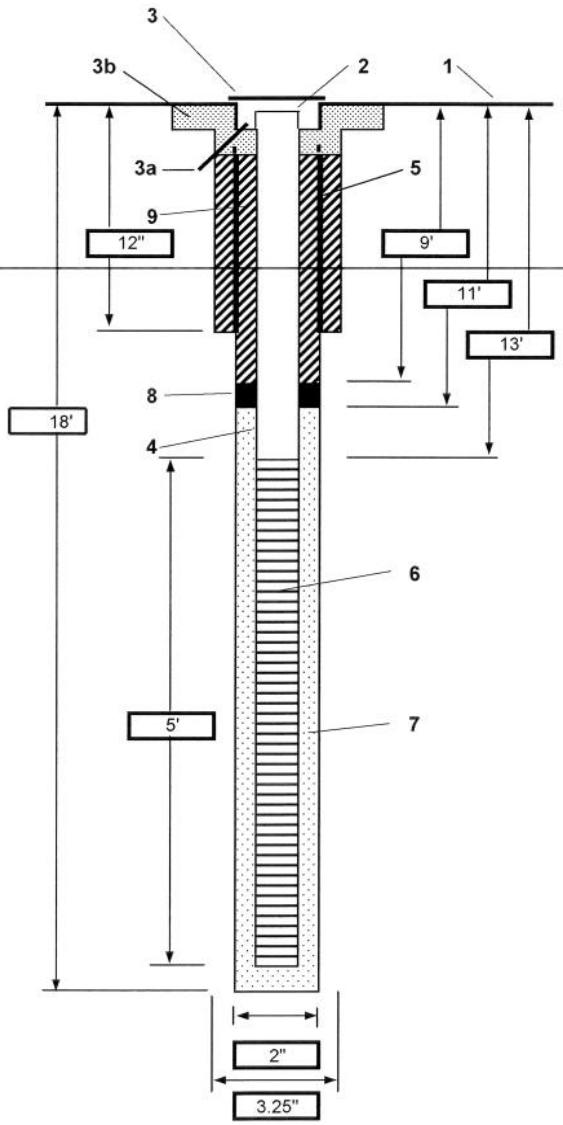

1- Ground elevation at well _____

2- Top of casing elevation _____

3- Wellhead protection cover type: 18" Stainless Steel Roadbox
   a) drain tube? N/A
   b) concrete pad dimensions: 24" Circular Concrete Pad

~~4- Dia./type of well casing~~: ~~2" diameter PVC Schedule 40~~

5- Dia./type surface casing: N/A

6- Type/slot/size of screen: 2" diameter PVC Schedule 40
   0.020 Continuous Johnson Vee-Wire Screen

7- Type screen filter: #1 Sand
   a) Quantity used: 3 50 lb bags

8- Type of seal: Medium Bentonite Chips
   a) Quantity used: 1 40 lb bag

9- Grout
   a) Grout mix used: Portland Cement/Bentonite Mix
   b) Method of placement _____
   c) Vol.of surface casing grout _____
   d) Vol. of well casing grout _____

Development method _____

Development time _____

Estimated purge volume _____

Comments _____

PROJECT NUMBER	WELL NUMBER		
314138.PT.SI	**IS47IW05S**	SHEET 1	OF 1

CH2MHILL

WELL COMPLETION DIAGRAM

PROJECT : NSF - Indian Head - Site 47 LOCATION : Indian Head, MD

DRILLING CONTRACTOR : Parratt-Wolff, Hillsborough, NC

DRILLING METHOD AND EQUIPMENT USED : CME 55 - Direct-Push Technology

WATER LEVELS : START : 1440 4/29/09 END : LOGGER : I. Zmudzin/PHL

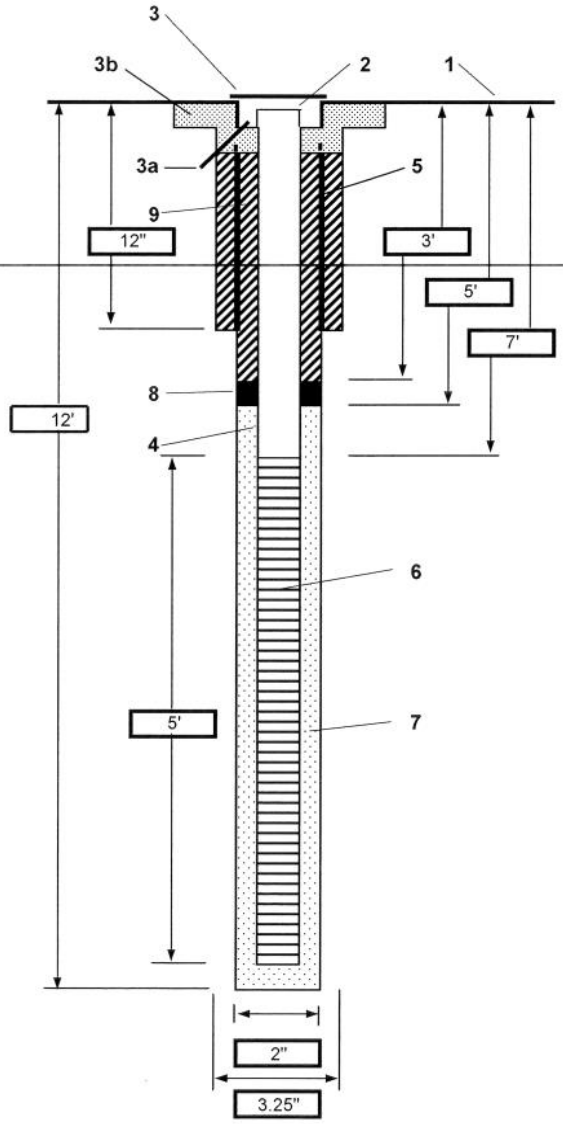

1- Ground elevation at well _____

2- Top of casing elevation _____

3- Wellhead protection cover type: 18" Stainless Steel Roadbox
   a) drain tube?: N/A
   b) concrete pad dimensions: 24" Circular Concrete Pad

4- Dia./type of well casing: 2" diameter PVC Schedule 40

5- Dia./type surface casing: N/A

6- Type/slot/size of screen: 2" diameter PVC Schedule 40
   0.020 Continuous Johnson Vee-Wire Screen

7- Type screen filter: #1 Sand
   a) Quantity used: 3 50 lb bags

8- Type of seal: Medium Bentonite Chips
   a) Quantity used: 1 40 lb bag

9- Grout
   a) Grout mix used: Portland Cement/Bentonite Mix
   b) Method of placement: _____
   c) Vol.of surface casing grout: _____
   d) Vol. of well casing grout: _____

Development method _____

Development time _____

Estimated purge volume _____

Comments _____

PROJECT NUMBER	WELL NUMBER		
314138.PT.SI	**IS47IW06D**	SHEET 1	OF 1

CH2MHILL

WELL COMPLETION DIAGRAM

PROJECT : NSF - Indian Head - Site 47 LOCATION : Indian Head, MD

DRILLING CONTRACTOR : Parratt-Wolff, Hillsborough, NC

DRILLING METHOD AND EQUIPMENT USED : CME 55 - Direct-Push Technology

WATER LEVELS : START : 0935 4/30/09 END : LOGGER : I. Zmudzin/PHL

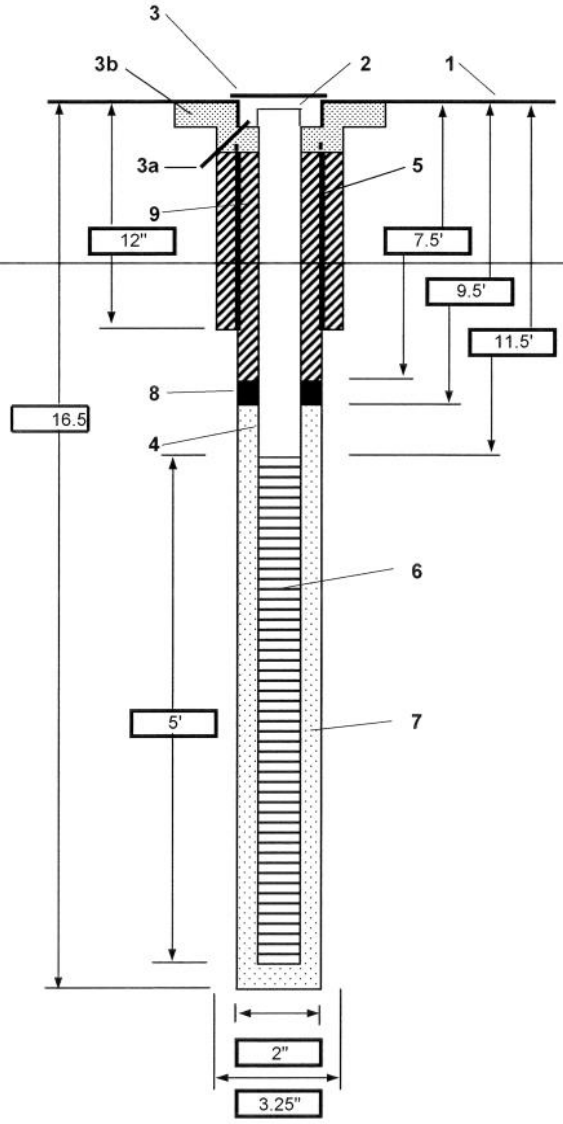

1- Ground elevation at well _____

2- Top of casing elevation _____

3- Wellhead protection cover type: 18" Stainless Steel Roadbox
   a) drain tube? N/A
   b) concrete pad dimensions: 24" Circular Concrete Pad

4- Dia./type of well casing: 2" diameter PVC Schedule 40

5- Dia./type surface casing: N/A

6- Type/slot/size of screen: 2" diameter PVC Schedule 40
   0.020 Continuous Johnson Vee-Wire Screen

7- Type screen filter: #1 Sand
   a) Quantity used: 3 50 lb bags

8- Type of seal: Medium Bentonite Chips
   a) Quantity used: 1 40 lb bag

9- Grout
   a) Grout mix used: Portland Cement/Bentonite Mix
   b) Method of placement _____
   c) Vol.of surface casing grout _____
   d) Vol. of well casing grout _____

Development method _____

Development time _____

Estimated purge volume _____

Comments _____

PROJECT NUMBER	WELL NUMBER		
314138.PT.SI	**IS47IW06S**	SHEET 1	OF 1

CH2MHILL

WELL COMPLETION DIAGRAM

PROJECT : NSF - Indian Head - Site 47 LOCATION : Indian Head, MD

DRILLING CONTRACTOR : Parratt-Wolff, Hillsborough, NC

DRILLING METHOD AND EQUIPMENT USED : CME 55 - Direct-Push Technology

WATER LEVELS : START : 1545 4/22/09 END : LOGGER : I. Zmudzin/PHL

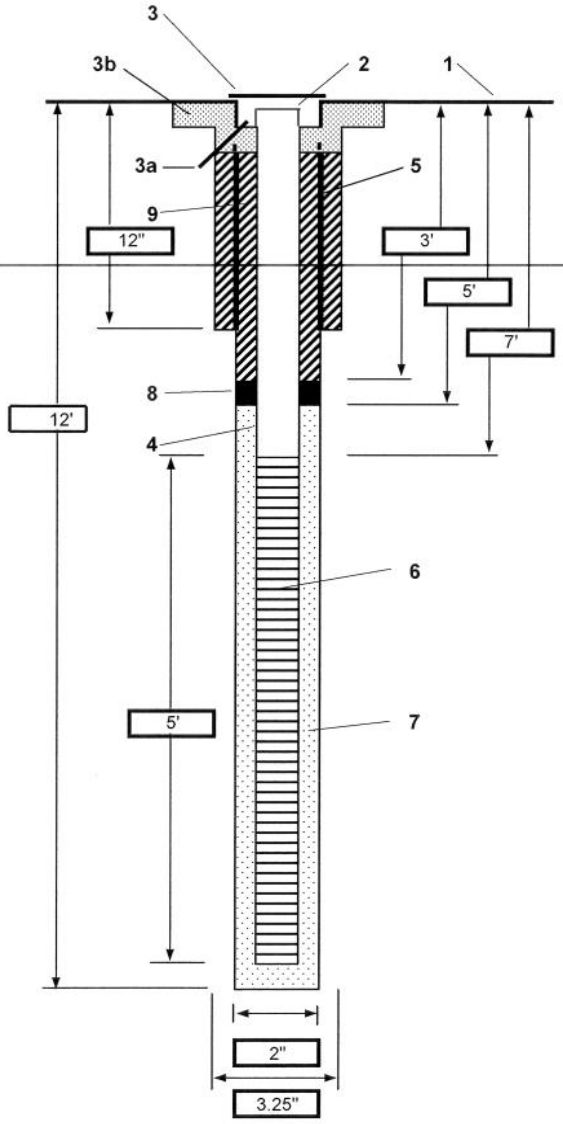

1- Ground elevation at well _____

2- Top of casing elevation _____

3- Wellhead protection cover type: 18" Stainless Steel Roadbox
   a) drain tube?: N/A
   b) concrete pad dimensions: 24" Circular Concrete Pad

4- Dia./type of well casing: 2" diameter PVC Schedule 40

5- Dia./type surface casing: N/A

6- Type/slot/size of screen: 2" diameter PVC Schedule 40
   0.020 Continuous Johnson Vee-Wire Screen

7- Type screen filter: #1 Sand
   a) Quantity used: 3 50 lb bags

8- Type of seal: Medium Bentonite Chips
   a) Quantity used: 1 40 lb bag

9- Grout
   a) Grout mix used: Portland Cement/Bentonite Mix
   b) Method of placement: _____
   c) Vol.of surface casing grout: _____
   d) Vol. of well casing grout: _____

Development method _____

Development time _____

Estimated purge volume _____

Comments _____

PROJECT NUMBER	WELL NUMBER		
314138.PT.SI	**IS47IW07D**	SHEET 1	OF 1

CH2MHILL

WELL COMPLETION DIAGRAM

PROJECT : NSF - Indian Head - Site 47 LOCATION : Indian Head, MD

DRILLING CONTRACTOR : Parratt-Wolff, Hillsborough, NC

DRILLING METHOD AND EQUIPMENT USED : CME 55 - Direct-Push Technology

WATER LEVELS : START : 1315 4/30/09 END : LOGGER : I. Zmudzin/PHL

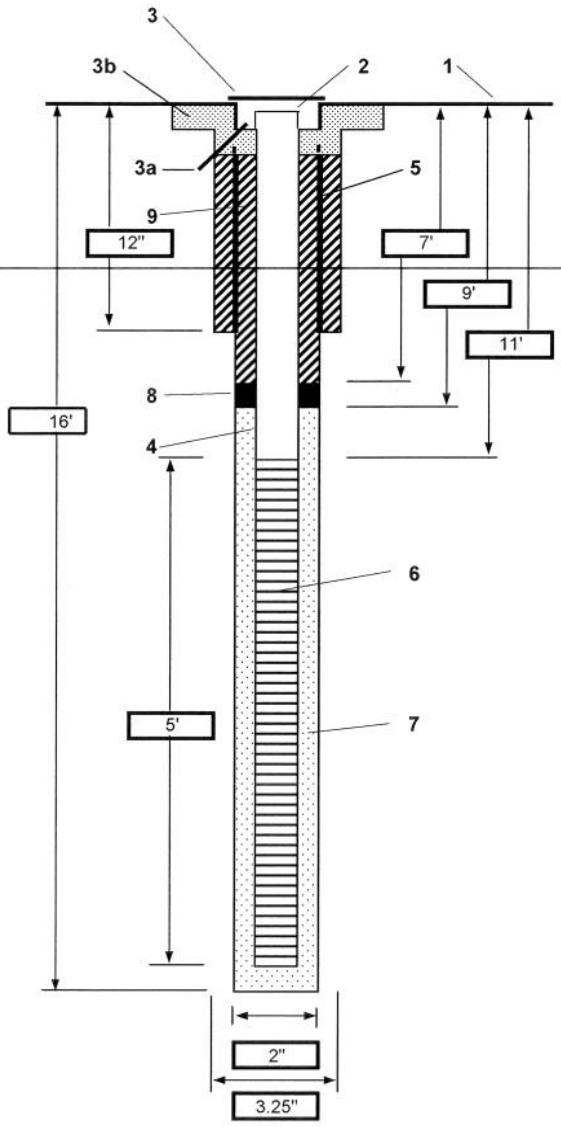

1- Ground elevation at well _____

2- Top of casing elevation _____

3- Wellhead protection cover type: 18" Stainless Steel Roadbox
   a) drain tube?: N/A
   b) concrete pad dimensions: 24" Circular Concrete Pad

~~4- Dia./type of well casing: 2" diameter PVC Schedule 40~~

5- Dia./type surface casing: N/A

6- Type/slot/size of screen: 2" diameter PVC Schedule 40
   0.020 Continuous Johnson Vee-Wire Screen

7- Type screen filter: #1 Sand
   a) Quantity used: 3 50 lb bags

8- Type of seal: Medium Bentonite Chips
   a) Quantity used: 1 40 lb bag

9- Grout
   a) Grout mix used: Portland Cement/Bentonite Mix
   b) Method of placement: _____
   c) Vol.of surface casing grout: _____
   d) Vol. of well casing grout: _____

Development method _____

Development time _____

Estimated purge volume _____

Comments _____

PROJECT NUMBER	WELL NUMBER		
314138.PT.SI	**IS47IW07S**	SHEET 1	OF 1

CH2MHILL

WELL COMPLETION DIAGRAM

PROJECT : NSF - Indian Head - Site 47 LOCATION : Indian Head, MD

DRILLING CONTRACTOR : Parratt-Wolff, Hillsborough, NC

DRILLING METHOD AND EQUIPMENT USED : CME 55 - Direct-Push Technology

WATER LEVELS : START : 1445 4/22/09 END : LOGGER : I. Zmudzin/PHL

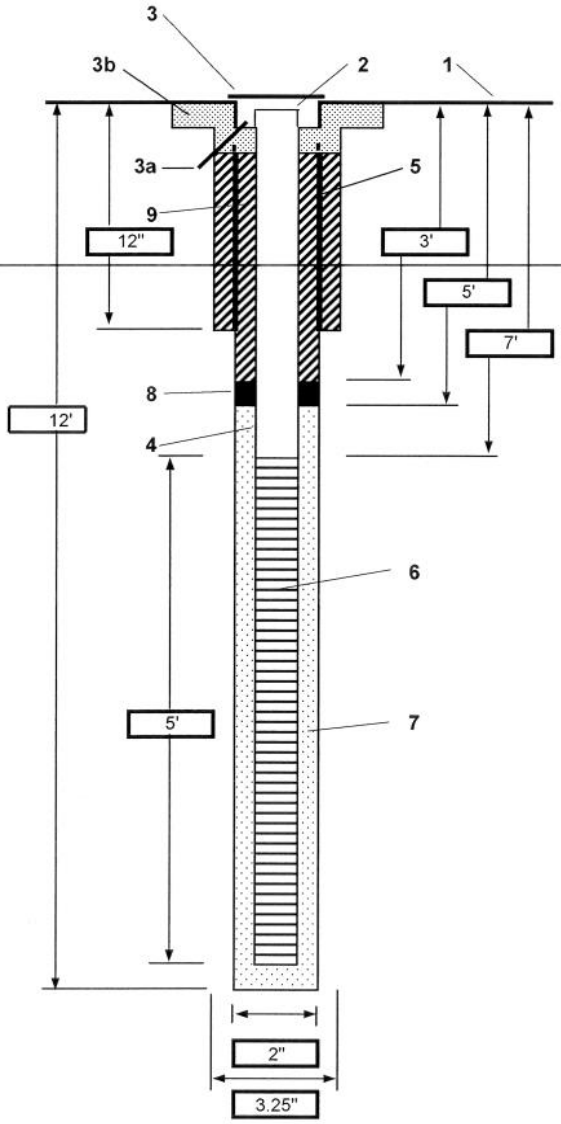

1- Ground elevation at well _____

2- Top of casing elevation _____

3- Wellhead protection cover type: 18" Stainless Steel Roadbox
   a) drain tube?: N/A
   b) concrete pad dimensions: 24" Circular Concrete Pad

4- Dia./type of well casing: 2" diameter PVC Schedule 40

5- Dia./type surface casing: N/A

6- Type/slot/size of screen: 2" diameter PVC Schedule 40
   0.020 Continuous Johnson Vee-Wire Screen

7- Type screen filter: #1 Sand
   a) Quantity used: 3 50 lb bags

8- Type of seal: Medium Bentonite Chips
   a) Quantity used: 1 40 lb bag

9- Grout
   a) Grout mix used: Portland Cement/Bentonite Mix
   b) Method of placement: _____
   c) Vol.of surface casing grout: _____
   d) Vol. of well casing grout: _____

Development method _____

Development time _____

Estimated purge volume _____

Comments _____

PROJECT NUMBER	WELL NUMBER		
314138.PT.SI	**IS47IW08D**	SHEET 1	OF 1

CH2MHILL

WELL COMPLETION DIAGRAM

PROJECT : NSF - Indian Head - Site 47 LOCATION : Indian Head, MD

DRILLING CONTRACTOR : Parratt-Wolff, Hillsborough, NC

DRILLING METHOD AND EQUIPMENT USED : CME 55 - Direct-Push Technology

WATER LEVELS : START : 1400 4/20/09 END : LOGGER : I. Zmudzin/PHL

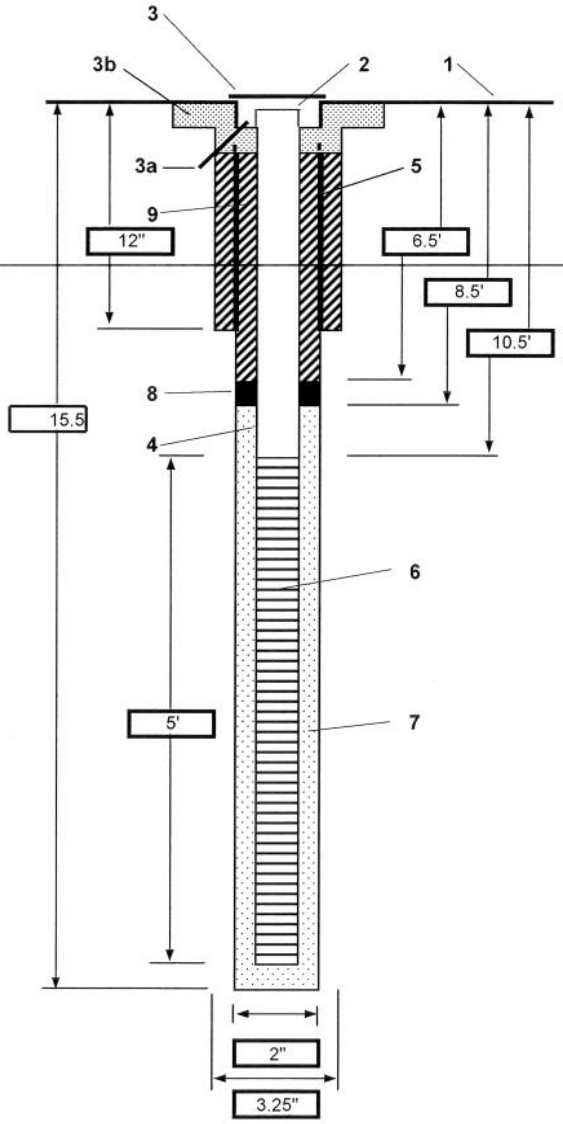

1- Ground elevation at well _____

2- Top of casing elevation _____

3- Wellhead protection cover type: 18" Stainless Steel Roadbox
   a) drain tube? N/A
   b) concrete pad dimensions: 24" Circular Concrete Pad

4- Dia./type of well casing: 2" diameter PVC Schedule 40

5- Dia./type surface casing: N/A

6- Type/slot/size of screen: 2" diameter PVC Schedule 40
   0.020 Continuous Johnson Vee-Wire Screen

7- Type screen filter: #1 Sand
   a) Quantity used: 3 50 lb bags

8- Type of seal: Medium Bentonite Chips
   a) Quantity used: 1 40 lb bag

9- Grout
   a) Grout mix used: Portland Cement/Bentonite Mix
   b) Method of placement _____
   c) Vol.of surface casing grout _____
   d) Vol. of well casing grout _____

Development method _____

Development time _____

Estimated purge volume _____

Comments _____

PROJECT NUMBER	WELL NUMBER		
314138.PT.SI	**IS47IW08S**	SHEET 1	OF 1

CH2MHILL

WELL COMPLETION DIAGRAM

PROJECT : NSF - Indian Head - Site 47 LOCATION : Indian Head, MD

DRILLING CONTRACTOR : Parratt-Wolff, Hillsborough, NC

DRILLING METHOD AND EQUIPMENT USED : CME 55 - Direct-Push Technology

WATER LEVELS : START : 1440 4/20/09 END : LOGGER : I. Zmudzin/PHL

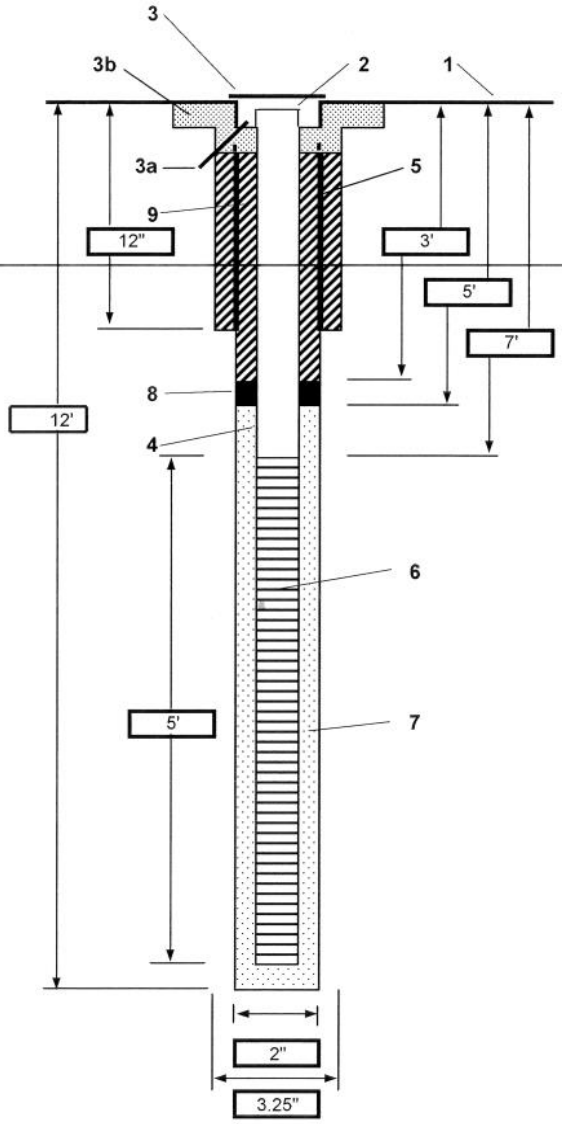

1- Ground elevation at well _____

2- Top of casing elevation _____

3- Wellhead protection cover type: 18" Stainless Steel Roadbox
   a) drain tube?: N/A
   b) concrete pad dimensions: 24" Circular Concrete Pad

4- Dia./type of well casing: 2" diameter PVC Schedule 40

5- Dia./type surface casing: N/A

6- Type/slot/size of screen: 2" diameter PVC Schedule 40
   0.020 Continuous Johnson Vee-Wire Screen

7- Type screen filter: #1 Sand
   a) Quantity used: 3 50 lb bags

8- Type of seal: Medium Bentonite Chips
   a) Quantity used: 1 40 lb bag

9- Grout
   a) Grout mix used: Portland Cement/Bentonite Mix
   b) Method of placement: _____
   c) Vol.of surface casing grout: _____
   d) Vol. of well casing grout: _____

Development method: _____

Development time: _____

Estimated purge volume: _____

Comments: _____

PROJECT NUMBER	WELL NUMBER		
314138.PT.SI	**IS47IW09D**	SHEET 1	OF 1

CH2MHILL

WELL COMPLETION DIAGRAM

PROJECT : NSF - Indian Head - Site 47 LOCATION : Indian Head, MD

DRILLING CONTRACTOR : Parratt-Wolff, Hillsborough, NC

DRILLING METHOD AND EQUIPMENT USED : CME 55 - Direct-Push Technology

WATER LEVELS : START : 1405 4/21/09 END : LOGGER : I. Zmudzin/PHL

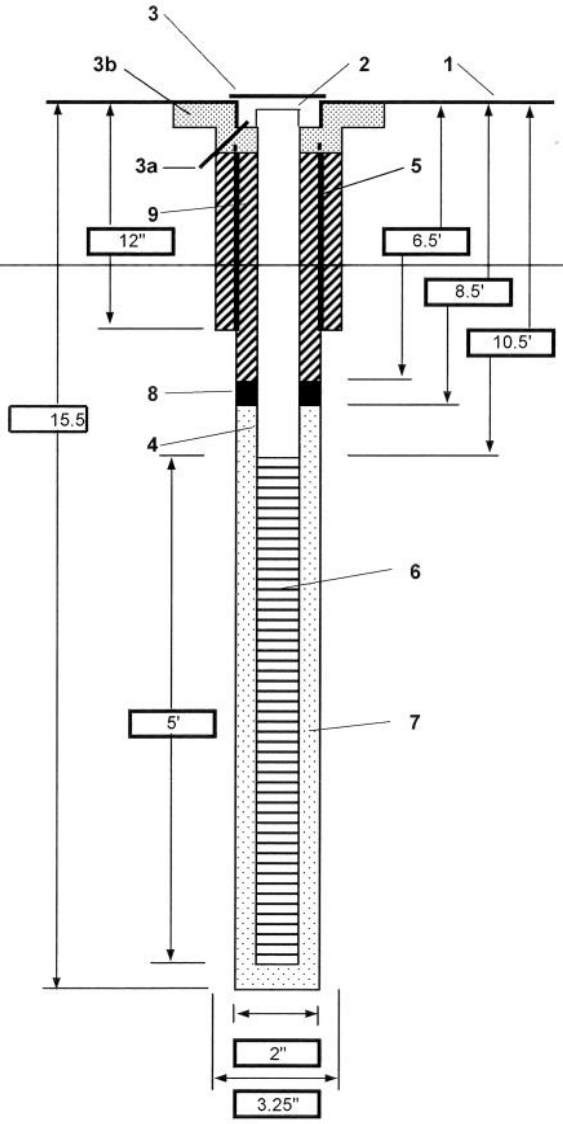

1- Ground elevation at well _____

2- Top of casing elevation _____

3- Wellhead protection cover type: 18" Stainless Steel Roadbox
   a) drain tube? N/A
   b) concrete pad dimensions: 24" Circular Concrete Pad

4- Dia./type of well casing: 2" diameter PVC Schedule 40

5- Dia./type surface casing: N/A

6- Type/slot/size of screen: 2" diameter PVC Schedule 40 0.020 Continuous Johnson Vee-Wire Screen

7- Type screen filter: #1 Sand
   a) Quantity used: 3 50 lb bags

8- Type of seal: Medium Bentonite Chips
   a) Quantity used: 1 40 lb bag

9- Grout
   a) Grout mix used: Portland Cement/Bentonite Mix
   b) Method of placement _____
   c) Vol.of surface casing grout _____
   d) Vol. of well casing grout _____

Development method _____

Development time _____

Estimated purge volume _____

Comments _____

PROJECT NUMBER	WELL NUMBER	
314138.PT.SI	**IS47IW09S**	SHEET 1 OF 1

CH2MHILL

WELL COMPLETION DIAGRAM

PROJECT : NSF - Indian Head - Site 47 LOCATION : Indian Head, MD

DRILLING CONTRACTOR : Parratt-Wolff, Hillsborough, NC

DRILLING METHOD AND EQUIPMENT USED : CME 55 - Direct-Push Technology

WATER LEVELS : START : 1025 4/17/09 END : LOGGER : I. Zmudzin/PHL

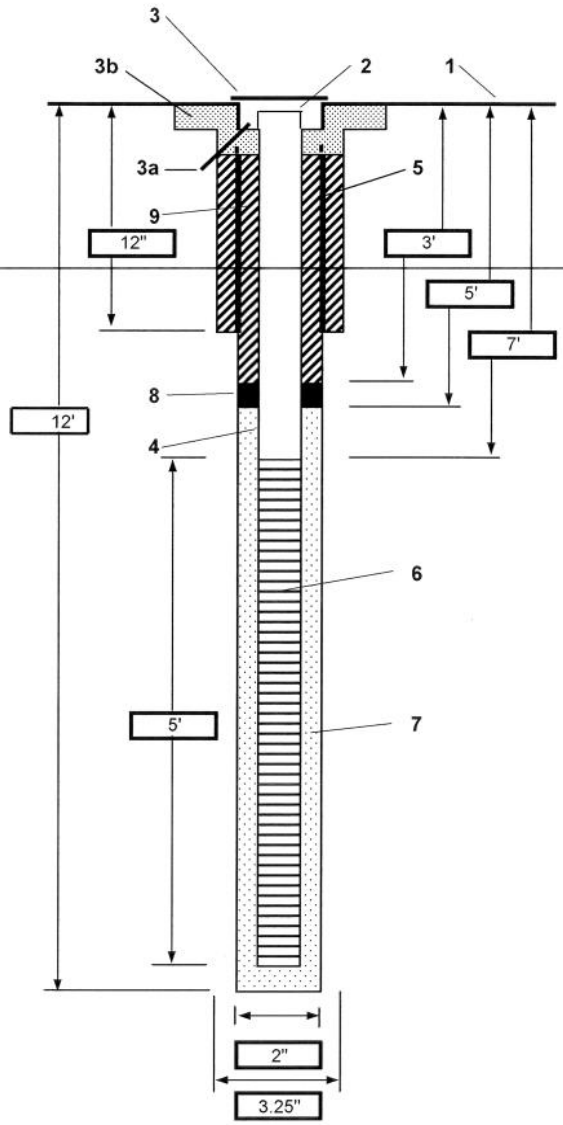

1- Ground elevation at well _____

2- Top of casing elevation _____

3- Wellhead protection cover type: 18" Stainless Steel Roadbox
   a) drain tube?: N/A
   b) concrete pad dimensions: 24" Circular Concrete Pad

4- ~~Dia./type of well casing~~: ~~2" diameter PVC Schedule 40~~

5- Dia./type surface casing: N/A

6- Type/slot/size of screen: 2" diameter PVC Schedule 40
   0.020 Continuous Johnson Vee-Wire Screen

7- Type screen filter: #1 Sand
   a) Quantity used: 3 50 lb bags

8- Type of seal: Medium Bentonite Chips
   a) Quantity used: 1 40 lb bag

9- Grout
   a) Grout mix used: Portland Cement/Bentonite Mix
   b) Method of placement _____
   c) Vol.of surface casing grout _____
   d) Vol. of well casing grout _____

Development method _____

Development time _____

Estimated purge volume _____

Comments _____

PROJECT NUMBER	WELL NUMBER		
314138.PT.SI	**IS47IW10D**	SHEET 1	OF 1

CH2MHILL

WELL COMPLETION DIAGRAM

PROJECT : NSF - Indian Head - Site 47 LOCATION : Indian Head, MD

DRILLING CONTRACTOR : Parratt-Wolff, Hillsborough, NC

DRILLING METHOD AND EQUIPMENT USED : CME 55 - Direct-Push Technology

WATER LEVELS : START : 0830 4/21/09 END : LOGGER : I. Zmudzin/PHL

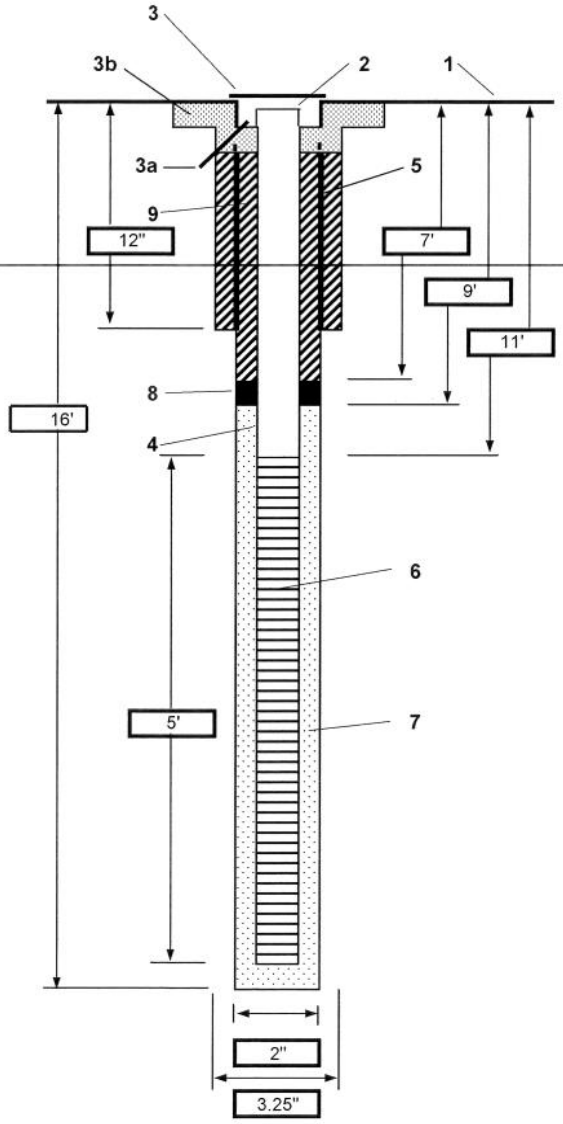

1- Ground elevation at well _____

2- Top of casing elevation _____

3- Wellhead protection cover type: 18" Stainless Steel Roadbox
   a) drain tube?: N/A
   b) concrete pad dimensions: 24" Circular Concrete Pad

4- Dia./type of well casing: 2" diameter PVC Schedule 40

5- Dia./type surface casing: N/A

6- Type/slot/size of screen: 2" diameter PVC Schedule 40
   0.020 Continuous Johnson Vee-Wire Screen

7- Type screen filter: #1 Sand
   a) Quantity used: 3 50 lb bags

8- Type of seal: Medium Bentonite Chips
   a) Quantity used: 1 40 lb bag

9- Grout
   a) Grout mix used: Portland Cement/Bentonite Mix
   b) Method of placement: _____
   c) Vol.of surface casing grout: _____
   d) Vol. of well casing grout: _____

Development method _____

Development time _____

Estimated purge volume _____

Comments _____

PROJECT NUMBER	WELL NUMBER		
314138.PT.SI	**IS47IW10S**	SHEET 1	OF 1

CH2MHILL

WELL COMPLETION DIAGRAM

PROJECT : NSF - Indian Head - Site 47 LOCATION : Indian Head, MD

DRILLING CONTRACTOR : Parratt-Wolff, Hillsborough, NC

DRILLING METHOD AND EQUIPMENT USED : CME 55 - Direct-Push Technology

WATER LEVELS : START : 0830 4/21/09 END : LOGGER : I. Zmudzin/PHL

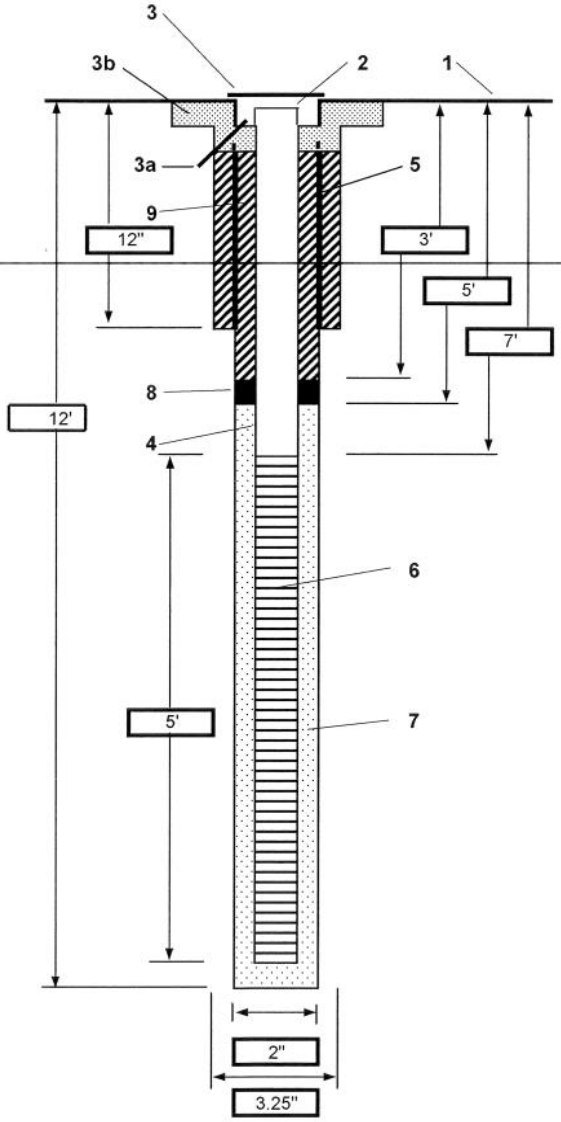

1- Ground elevation at well _____

2- Top of casing elevation _____

3- Wellhead protection cover type: 18" Stainless Steel Roadbox
   a) drain tube?: N/A
   b) concrete pad dimensions: 24" Circular Concrete Pad

4- Dia./type of well casing: 2" diameter PVC Schedule 40

5- Dia./type surface casing: N/A

6- Type/slot/size of screen: 2" diameter PVC Schedule 40
   0.020 Continuous Johnson Vee-Wire Screen

7- Type screen filter: #1 Sand
   a) Quantity used: 3 50 lb bags

8- Type of seal: Medium Bentonite Chips
   a) Quantity used: 1 40 lb bag

9- Grout
   a) Grout mix used: Portland Cement/Bentonite Mix
   b) Method of placement: _____
   c) Vol.of surface casing grout: _____
   d) Vol. of well casing grout: _____

Development method _____

Development time _____

Estimated purge volume _____

Comments _____

PROJECT NUMBER	WELL NUMBER		
314138.PT.SI	**IS47IW11D**	SHEET 1	OF 1

CH2MHILL

WELL COMPLETION DIAGRAM

PROJECT : NSF - Indian Head - Site 47 LOCATION : Indian Head, MD

DRILLING CONTRACTOR : Parratt-Wolff, Hillsborough, NC

DRILLING METHOD AND EQUIPMENT USED : CME 55 - Direct-Push Technology

WATER LEVELS : START : 1455 4/14/09 END : LOGGER : I. Zmudzin/PHL

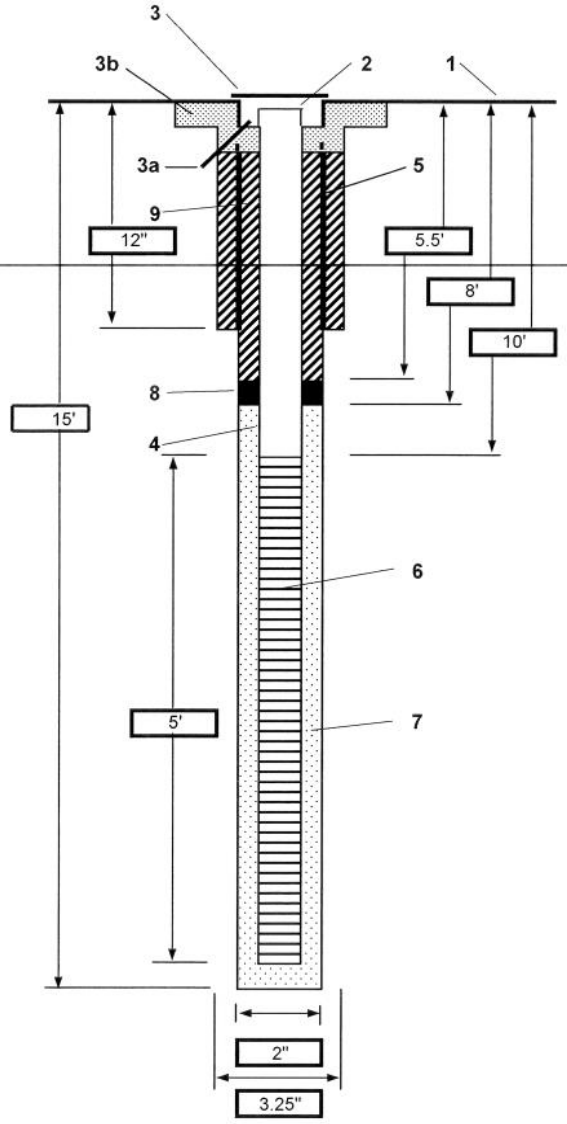

1- Ground elevation at well _____

2- Top of casing elevation _____

3- Wellhead protection cover type: 18" Stainless Steel Roadbox
   a) drain tube?: N/A
   b) concrete pad dimensions: 24" Circular Concrete Pad

4- Dia./type of well casing: 2" diameter PVC Schedule 40

5- Dia./type surface casing: N/A

6- Type/slot/size of screen: 2" diameter PVC Schedule 40 0.020 Continuous Johnson Vee-Wire Screen

7- Type screen filter: #1 Sand
   a) Quantity used: 3.5 50 lb bags

8- Type of seal: Medium Bentonite Chips
   a) Quantity used: 1 40 lb bag

9- Grout
   a) Grout mix used: Portland Cement/Bentonite Mix
   b) Method of placement _____
   c) Vol.of surface casing grout _____
   d) Vol. of well casing grout _____

Development method _____

Development time _____

Estimated purge volume _____

Comments _____

PROJECT NUMBER	WELL NUMBER		
314138.PT.SI	**IS47IW11S**	SHEET 1	OF 1

CH2MHILL

WELL COMPLETION DIAGRAM

PROJECT : NSF - Indian Head - Site 47 LOCATION : Indian Head, MD

DRILLING CONTRACTOR : Parratt-Wolff, Hillsborough, NC

DRILLING METHOD AND EQUIPMENT USED : CME 55 - Direct-Push Technology

WATER LEVELS : START : 0920 4/15/09 END : LOGGER : I. Zmudzin/PHL

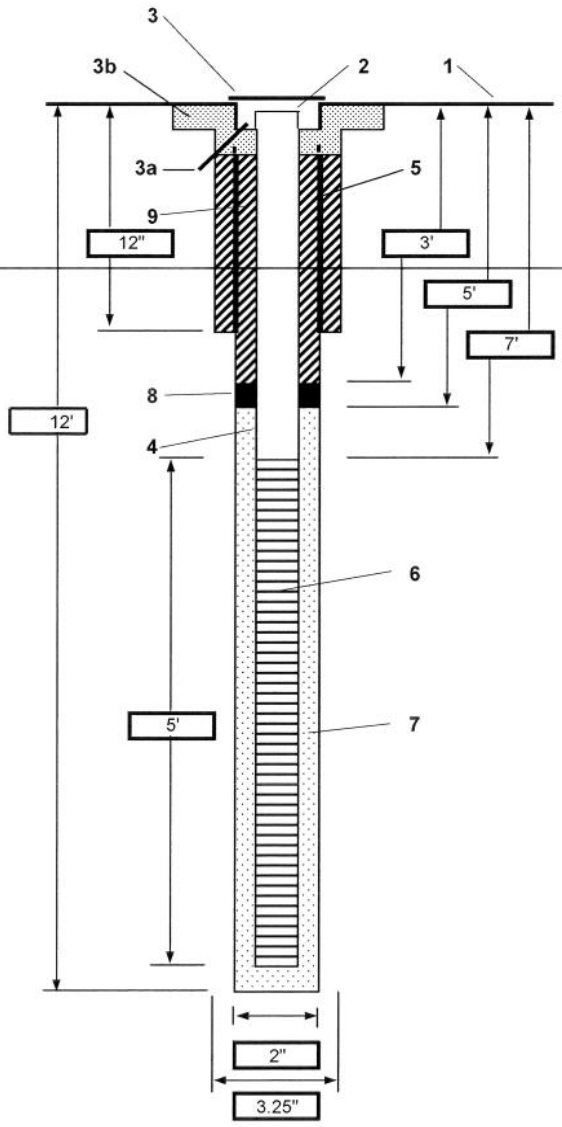

1- Ground elevation at well _____

2- Top of casing elevation _____

3- Wellhead protection cover type: 18" Stainless Steel Roadbox
   a) drain tube?: N/A
   b) concrete pad dimensions: 24" Circular Concrete Pad

4- ~~Dia./type of well casing~~: ~~2" diameter PVC Schedule 40~~

5- Dia./type surface casing: N/A

6- Type/slot/size of screen: 2" diameter PVC Schedule 40
   0.020 Continuous Johnson Vee-Wire Screen

7- Type screen filter: #1 Sand
   a) Quantity used: 3 50 lb bags

8- Type of seal: Medium Bentonite Chips
   a) Quantity used: 1 40 lb bag

9- Grout
   a) Grout mix used: Portland Cement/Bentonite Mix
   b) Method of placement: _____
   c) Vol.of surface casing grout: _____
   d) Vol. of well casing grout: _____

Development method _____

Development time _____

Estimated purge volume _____

Comments _____

PROJECT NUMBER	WELL NUMBER		
314138.PT.SI	**IS47IW12D**	SHEET 1	OF 1

CH2MHILL

WELL COMPLETION DIAGRAM

PROJECT : NSF - Indian Head - Site 47 LOCATION : Indian Head, MD

DRILLING CONTRACTOR : Parratt-Wolff, Hillsborough, NC

DRILLING METHOD AND EQUIPMENT USED : CME 55 - Direct-Push Technology

WATER LEVELS : START : 0845 4/17/09 END : LOGGER : I. Zmudzin/PHL

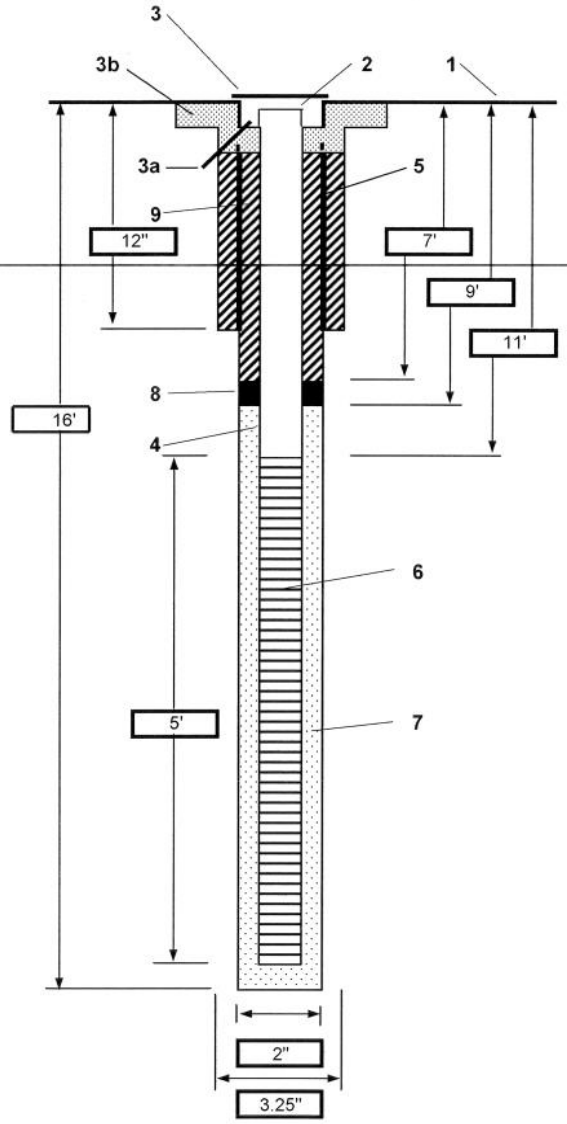

1- Ground elevation at well _____

2- Top of casing elevation _____

3- Wellhead protection cover type: 18" Stainless Steel Roadbox
   a) drain tube?: N/A
   b) concrete pad dimensions: 24" Circular Concrete Pad

4- Dia./type of well casing: 2" diameter PVC Schedule 40

5- Dia./type surface casing: N/A

6- Type/slot/size of screen: 2" diameter PVC Schedule 40
   0.020 Continuous Johnson Vee-Wire Screen

7- Type screen filter: #1 Sand
   a) Quantity used: 3 50 lb bags

8- Type of seal: Medium Bentonite Chips
   a) Quantity used: 1 40 lb bag

9- Grout
   a) Grout mix used: Portland Cement/Bentonite Mix
   b) Method of placement: _____
   c) Vol.of surface casing grout: _____
   d) Vol. of well casing grout: _____

Development method _____

Development time _____

Estimated purge volume _____

Comments _____

PROJECT NUMBER	WELL NUMBER		
314138.PT.SI	**IS47IW12S**	SHEET 1	OF 1

CH2MHILL

WELL COMPLETION DIAGRAM

PROJECT : NSF - Indian Head - Site 47 LOCATION : Indian Head, MD

DRILLING CONTRACTOR : Parratt-Wolff, Hillsborough, NC

DRILLING METHOD AND EQUIPMENT USED : CME 55 - Direct-Push Technology

WATER LEVELS : START : 0910 4/14/09 END : LOGGER : I. Zmudzin/PHL

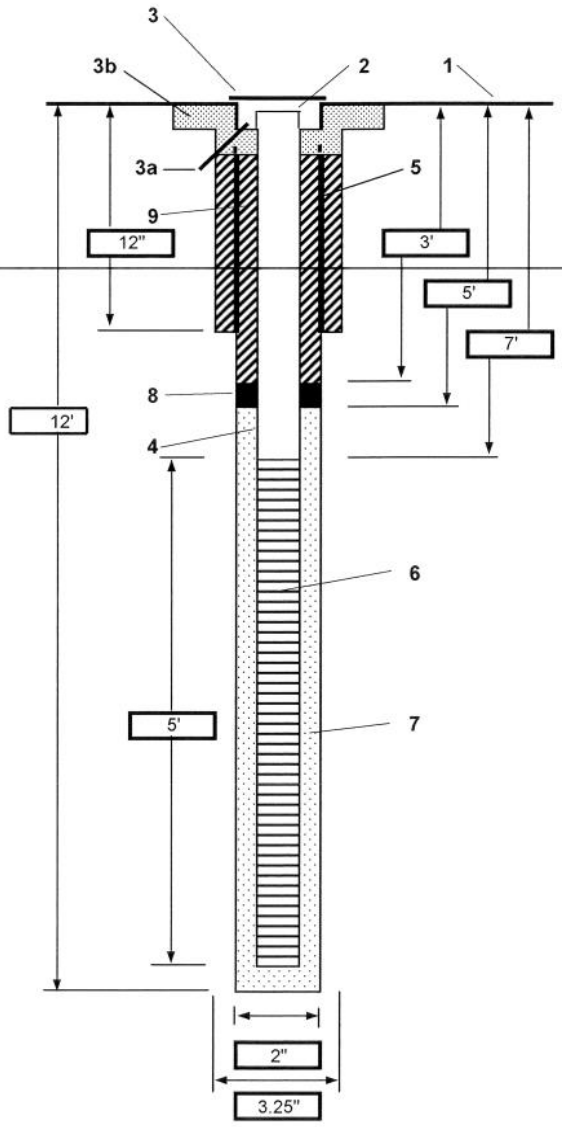

1- Ground elevation at well _____

2- Top of casing elevation _____

3- Wellhead protection cover type: 18" Stainless Steel Roadbox
   a) drain tube?: N/A
   b) concrete pad dimensions: 24" Circular Concrete Pad

4- ~~Dia./type of well casing~~: ~~2" diameter PVC Schedule 40~~

5- Dia./type surface casing: N/A

6- Type/slot/size of screen: 2" diameter PVC Schedule 40
   0.020 Continuous Johnson Vee-Wire Screen

7- Type screen filter: #1 Sand
   a) Quantity used: 3 50 lb bags

8- Type of seal: Medium Bentonite Chips
   a) Quantity used: 1 40 lb bag

9- Grout
   a) Grout mix used: Portland Cement/Bentonite Mix
   b) Method of placement: _____
   c) Vol.of surface casing grout: _____
   d) Vol. of well casing grout: _____

Development method _____

Development time _____

Estimated purge volume _____

Comments _____

PROJECT NUMBER	WELL NUMBER		
314138.PT.SI	**IS47IW13D**	SHEET 1	OF 1

CH2MHILL

WELL COMPLETION DIAGRAM

PROJECT : NSF - Indian Head - Site 47 LOCATION : Indian Head, MD

DRILLING CONTRACTOR : Parratt-Wolff, Hillsborough, NC

DRILLING METHOD AND EQUIPMENT USED : CME 55 - Direct-Push Technology

WATER LEVELS : START : 1555 4/16/09 END : LOGGER : I. Zmudzin/PHL

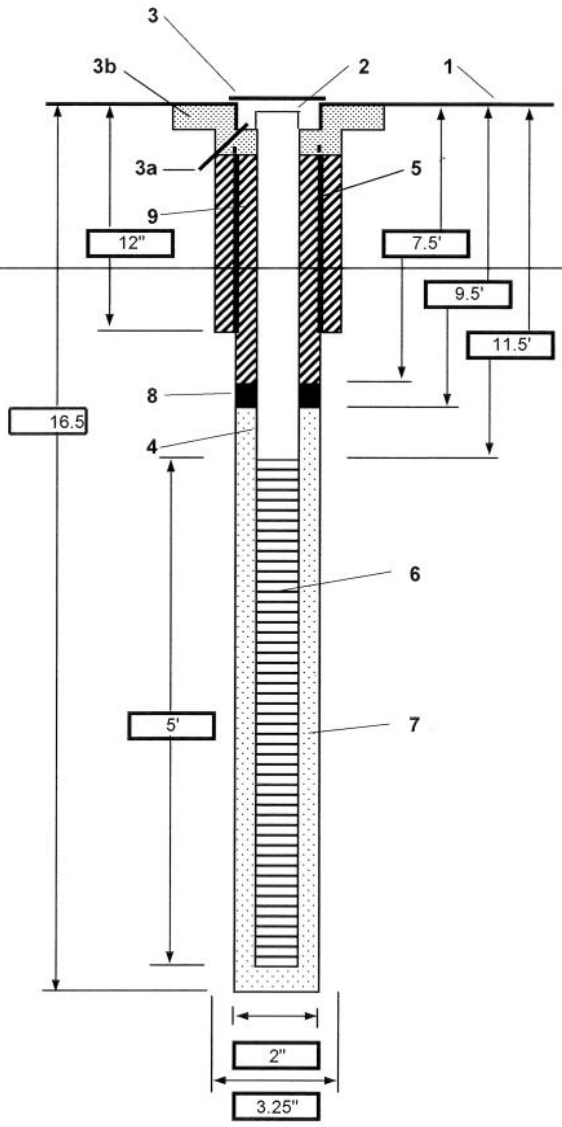

1- Ground elevation at well _____

2- Top of casing elevation _____

3- Wellhead protection cover type: 18" Stainless Steel Roadbox
   a) drain tube?: N/A
   b) concrete pad dimensions: 24" Circular Concrete Pad

4- ~~Dia./type of well casing~~: ~~2" diameter PVC Schedule 40~~

5- Dia./type surface casing: N/A

6- Type/slot/size of screen: 2" diameter PVC Schedule 40
   0.020 Continuous Johnson Vee-Wire Screen

7- Type screen filter: #1 Sand
   a) Quantity used: 3 50 lb bags

8- Type of seal: Medium Bentonite Chips
   a) Quantity used: 1 40 lb bag

9- Grout
   a) Grout mix used: Portland Cement/Bentonite Mix
   b) Method of placement: _____
   c) Vol.of surface casing grout: _____
   d) Vol. of well casing grout: _____

Development method _____

Development time _____

Estimated purge volume _____

Comments _____

PROJECT NUMBER	WELL NUMBER		
314138.PT.SI	**IS47IW13S**	SHEET 1	OF 1

CH2MHILL

WELL COMPLETION DIAGRAM

PROJECT : NSF - Indian Head - Site 47 LOCATION : Indian Head, MD

DRILLING CONTRACTOR : Parratt-Wolff, Hillsborough, NC

DRILLING METHOD AND EQUIPMENT USED : CME 55 - Direct-Push Technology

WATER LEVELS : START : 1450 4/13/09 END : LOGGER : I. Zmudzin/PHL

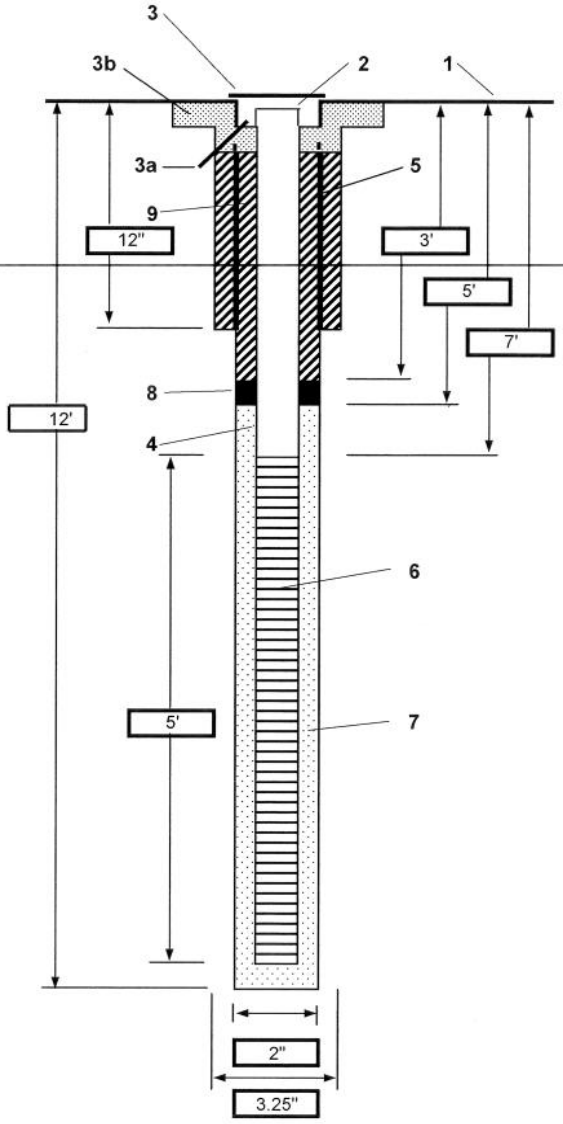

1- Ground elevation at well _____

2- Top of casing elevation _____

3- Wellhead protection cover type: 18" Stainless Steel Roadbox
   a) drain tube?: N/A
   b) concrete pad dimensions: 24" Circular Concrete Pad

4- Dia./type of well casing: 2" diameter PVC Schedule 40

5- Dia./type surface casing: N/A

6- Type/slot/size of screen: 2" diameter PVC Schedule 40
   0.020 Continuous Johnson Vee-Wire Screen

7- Type screen filter: #1 Sand
   a) Quantity used: 3 50 lb bags

8- Type of seal: Medium Bentonite Chips
   a) Quantity used: 1 40 lb bag

9- Grout
   a) Grout mix used: Portland Cement/Bentonite Mix
   b) Method of placement: _____
   c) Vol.of surface casing grout: _____
   d) Vol. of well casing grout: _____

Development method _____

Development time _____

Estimated purge volume _____

Comments _____

PROJECT NUMBER	WELL NUMBER	
314138.PT.SI	**IS47IW14D**	SHEET 1 OF 1

CH2MHILL

WELL COMPLETION DIAGRAM

PROJECT : NSF - Indian Head - Site 47 LOCATION : Indian Head, MD

DRILLING CONTRACTOR : Parratt-Wolff, Hillsborough, NC

DRILLING METHOD AND EQUIPMENT USED : CME 55 - Direct-Push Technology

WATER LEVELS : START : 1110 4/15/09 END : LOGGER : I. Zmudzin/PHL

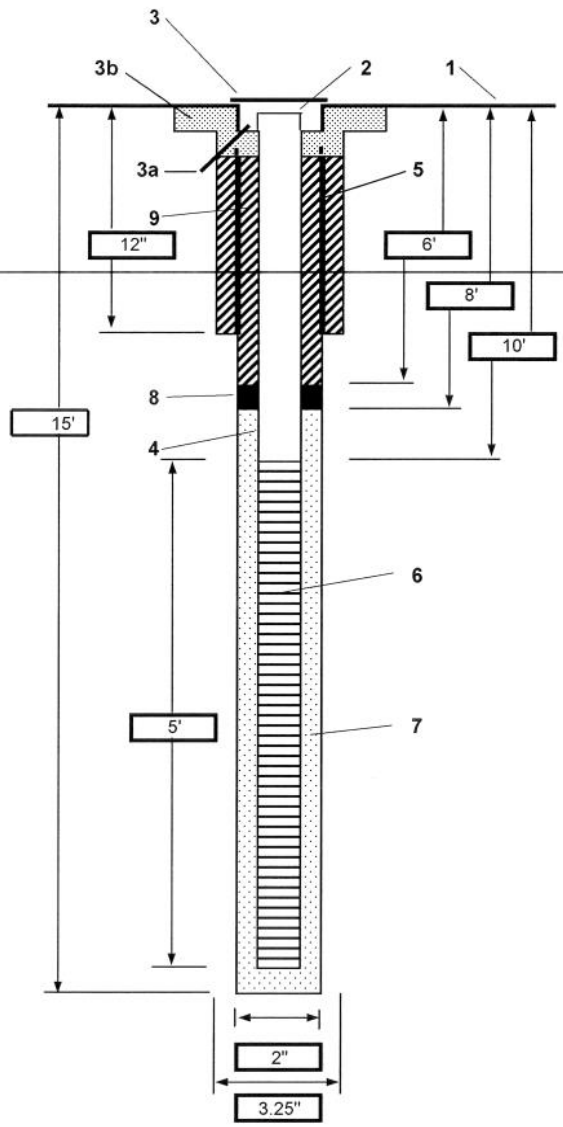

1- Ground elevation at well _____

2- Top of casing elevation _____

3- Wellhead protection cover type: 18" Stainless Steel Roadbox
   a) drain tube? N/A
   b) concrete pad dimensions: 24" Circular Concrete Pad

4- Dia./type of well casing: 2" diameter PVC Schedule 40

5- Dia./type surface casing: N/A

6- Type/slot/size of screen: 2" diameter PVC Schedule 40
   0.020 Continuous Johnson Vee-Wire Screen

7- Type screen filter: #1 Sand
   a) Quantity used: 3 50 lb bags

8- Type of seal: Medium Bentonite Chips
   a) Quantity used: 1 40 lb bag

9- Grout
   a) Grout mix used: Portland Cement/Bentonite Mix
   b) Method of placement _____
   c) Vol.of surface casing grout _____
   d) Vol. of well casing grout _____

Development method _____

Development time _____

Estimated purge volume _____

Comments _____

PROJECT NUMBER	WELL NUMBER		
314138.PT.SI	**IS47IW14S**	SHEET 1	OF 1

CH2MHILL

WELL COMPLETION DIAGRAM

PROJECT : NSF - Indian Head - Site 47 LOCATION : Indian Head, MD

DRILLING CONTRACTOR : Parratt-Wolff, Hillsborough, NC

DRILLING METHOD AND EQUIPMENT USED : CME 55 - Direct-Push Technology

WATER LEVELS : START : 1125 4/14/09 END : LOGGER : I. Zmudzin/PHL

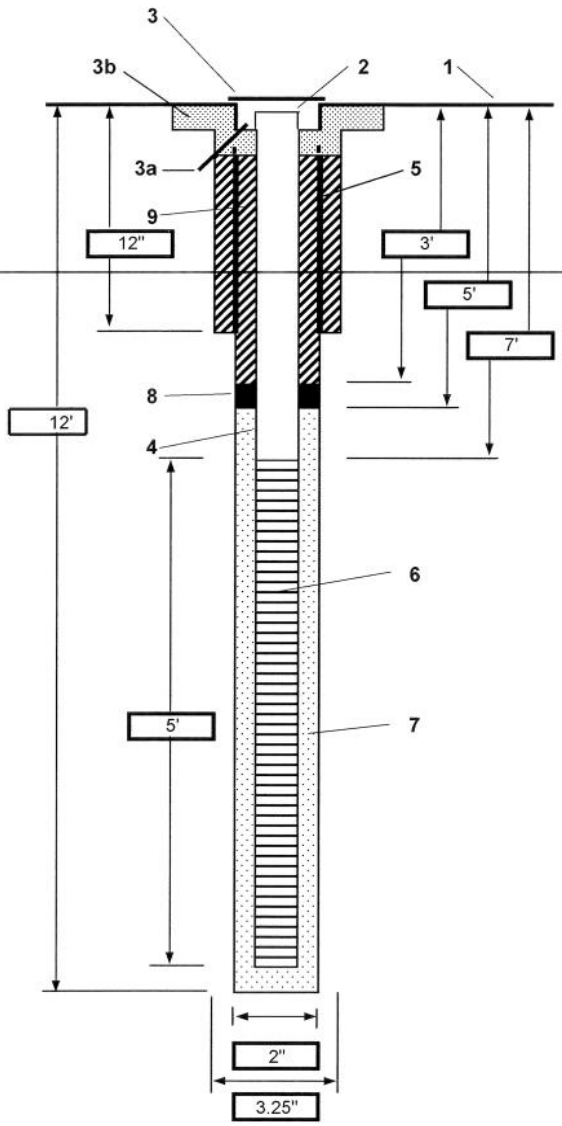

1- Ground elevation at well _____

2- Top of casing elevation _____

3- Wellhead protection cover type: 18" Stainless Steel Roadbox
   a) drain tube?: N/A
   b) concrete pad dimensions: 24" Circular Concrete Pad

4- Dia./type of well casing: 2" diameter PVC Schedule 40

5- Dia./type surface casing: N/A

6- Type/slot/size of screen: 2" diameter PVC Schedule 40
   0.020 Continuous Johnson Vee-Wire Screen

7- Type screen filter: #1 Sand
   a) Quantity used: 3 50 lb bags

8- Type of seal: Medium Bentonite Chips
   a) Quantity used: 1 40 lb bag

9- Grout
   a) Grout mix used: Portland Cement/Bentonite Mix
   b) Method of placement: _____
   c) Vol.of surface casing grout: _____
   d) Vol. of well casing grout: _____

Development method _____

Development time _____

Estimated purge volume _____

Comments _____

PROJECT NUMBER	WELL NUMBER		
314138.PT.SI	**IS47MW19**	SHEET 1	OF 1

CH2MHILL

WELL COMPLETION DIAGRAM

PROJECT : NSF - Indian Head - Site 47 LOCATION : Indian Head, MD

DRILLING CONTRACTOR : Parratt-Wolff, Hillsborough, NC

DRILLING METHOD AND EQUIPMENT USED : CME 55 - Direct-Push Technology

WATER LEVELS : START : 1045 4/29/09 END : LOGGER : I. Zmudzin/PHL

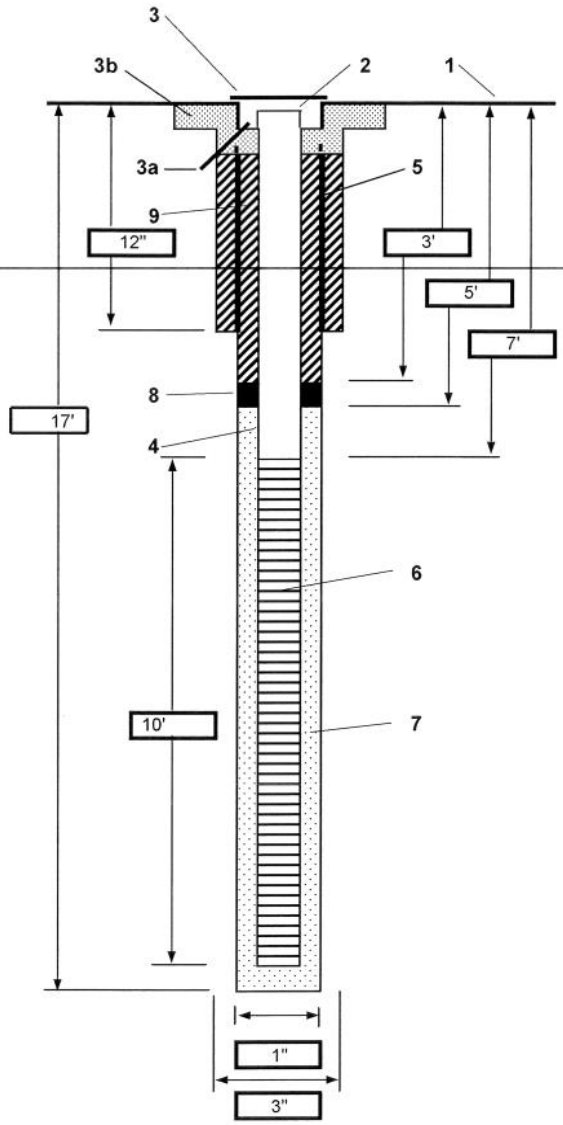

1- Ground elevation at well _____

2- Top of casing elevation _____

3- Wellhead protection cover type: 8" Stainless Steel Roadbox
   a) drain tube? N/A
   b) concrete pad dimensions: 2' diameter circular concrete pad, 6" thick

~~4- Dia./type of well casing~~ ~~1" diameter PVC Schedule 40~~

5- Dia./type surface casing: N/A

6- Type/slot/size of screen: 1" diameter PVC Schedule 40
   0.010 Machine-Slotted Pre-Pack Screen

7- Type screen filter: N/A - Pre-Pack
   a) Quantity used _____

8- Type of seal: N/A - Pre-Pack Bentonite Collar
   a) Quantity used: 2' long x 2" diameter

9- Grout
   a) Grout mix used: Portland Cement/Bentonite Mix
   b) Method of placement _____
   c) Vol.of surface casing grout _____
   d) Vol. of well casing grout _____

Development method _____

Development time _____

Estimated purge volume _____

Comments _____

PROJECT NUMBER	WELL NUMBER		
314138.PT.SI	**IS47MW20**	SHEET 1	OF 1

CH2MHILL

WELL COMPLETION DIAGRAM

PROJECT : NSF - Indian Head - Site 47 LOCATION : Indian Head, MD

DRILLING CONTRACTOR : Parratt-Wolff, Hillsborough, NC

DRILLING METHOD AND EQUIPMENT USED : CME 55 - Direct-Push Technology

WATER LEVELS : START : 0855 4/29/09 END : LOGGER : I. Zmudzin/PHL

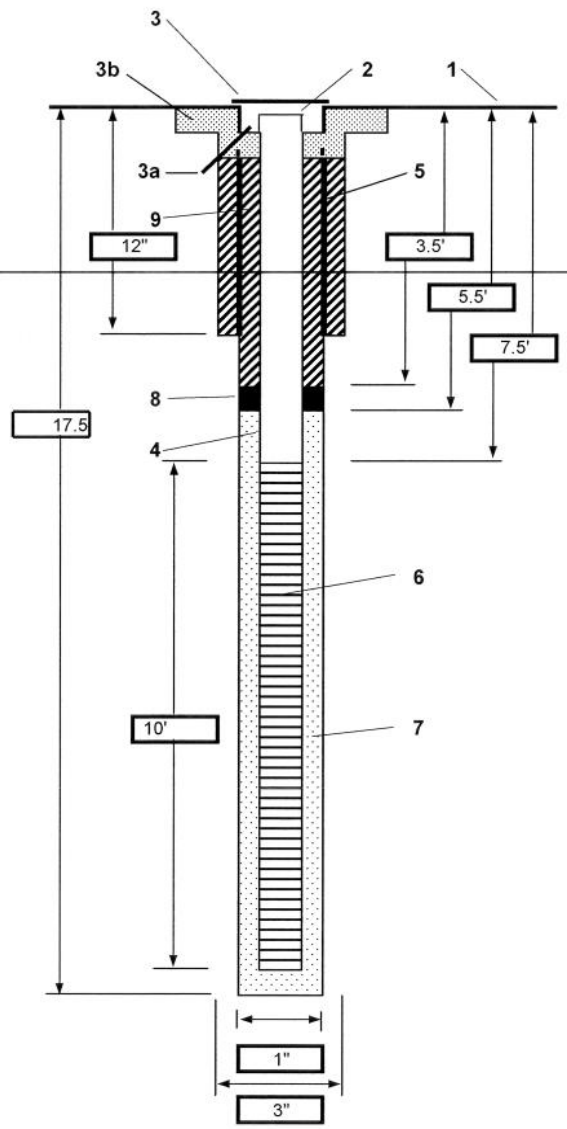

1- Ground elevation at well _____

2- Top of casing elevation _____

3- Wellhead protection cover type: 8" Stainless Steel Roadbox
   a) drain tube? N/A
   b) concrete pad dimensions: 2' diameter circular concrete pad, 6" thick

~~4- Dia./type of well casing~~: ~~1" diameter PVC Schedule 40~~

5- Dia./type surface casing: N/A

6- Type/slot/size of screen: 1" diameter PVC Schedule 40
   0.010 Machine-Slotted Pre-Pack Screen

7- Type screen filter: N/A - Pre-Pack
   a) Quantity used _____

8- Type of seal: N/A - Pre-Pack Bentonite Collar
   a) Quantity used: 2' long x 2" diameter

9- Grout
   a) Grout mix used: Portland Cement/Bentonite Mix
   b) Method of placement _____
   c) Vol.of surface casing grout _____
   d) Vol. of well casing grout _____

Development method _____

Development time _____

Estimated purge volume _____

Comments _____

PROJECT NUMBER	WELL NUMBER		
314138.PT.SI	**IS47MW21**	SHEET 1	OF 1

CH2MHILL

WELL COMPLETION DIAGRAM

PROJECT : NSF - Indian Head - Site 47 LOCATION : Indian Head, MD

DRILLING CONTRACTOR : Parratt-Wolff, Hillsborough, NC

DRILLING METHOD AND EQUIPMENT USED : CME 55 - Direct-Push Technology

WATER LEVELS : START : 1005 4/29/09 END : LOGGER : I. Zmudzin/PHL

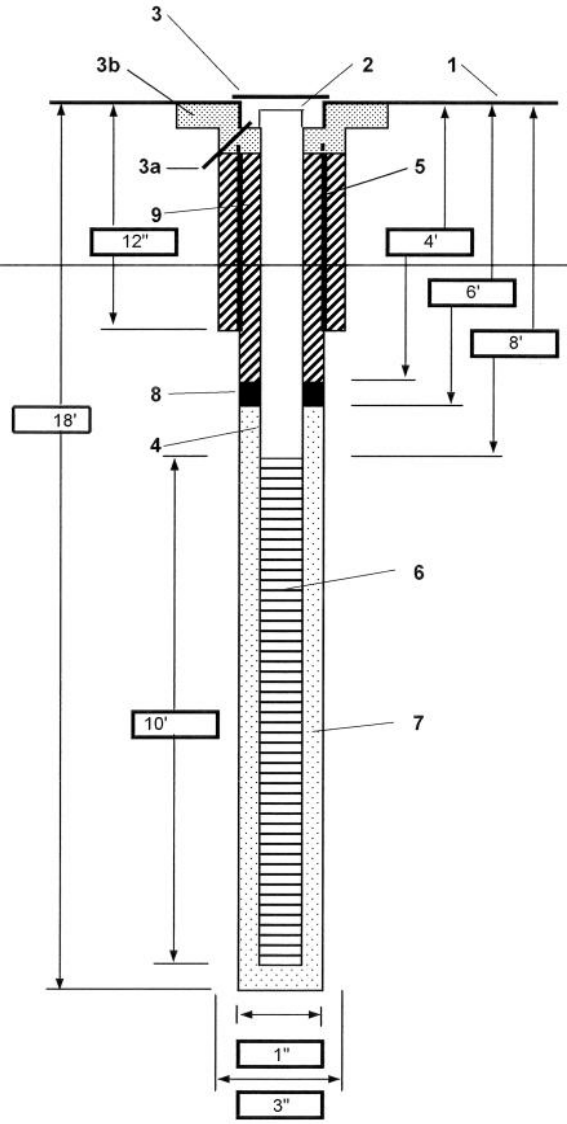

1- Ground elevation at well _____

2- Top of casing elevation _____

3- Wellhead protection cover type: 8" Stainless Steel Roadbox
   a) drain tube? N/A
   b) concrete pad dimensions: 2' diameter circular concrete pad, 6" thick

4- Dia./type of well casing: 1" diameter PVC Schedule 40

5- Dia./type surface casing: N/A

6- Type/slot/size of screen: 1" diameter PVC Schedule 40
   0.010 Machine-Slotted Pre-Pack Screen

7- Type screen filter: N/A - Pre-Pack
   a) Quantity used _____

8- Type of seal: N/A - Pre-Pack Bentonite Collar
   a) Quantity used: 2' long x 2" diameter

9- Grout
   a) Grout mix used: Portland Cement/Bentonite Mix
   b) Method of placement _____
   c) Vol.of surface casing grout _____
   d) Vol. of well casing grout _____

Development method _____

Development time _____

Estimated purge volume _____

Comments _____

PROJECT NUMBER	WELL NUMBER		
314138.PT.SI	**IS47MW22**	SHEET 1	OF 1

CH2MHILL

WELL COMPLETION DIAGRAM

PROJECT : NSF - Indian Head - Site 47 LOCATION : Indian Head, MD

DRILLING CONTRACTOR : Parratt-Wolff, Hillsborough, NC

DRILLING METHOD AND EQUIPMENT USED : CME 55 - Direct-Push Technology

WATER LEVELS : START : 1130 4/16/09 END : LOGGER : I. Zmudzin/PHL

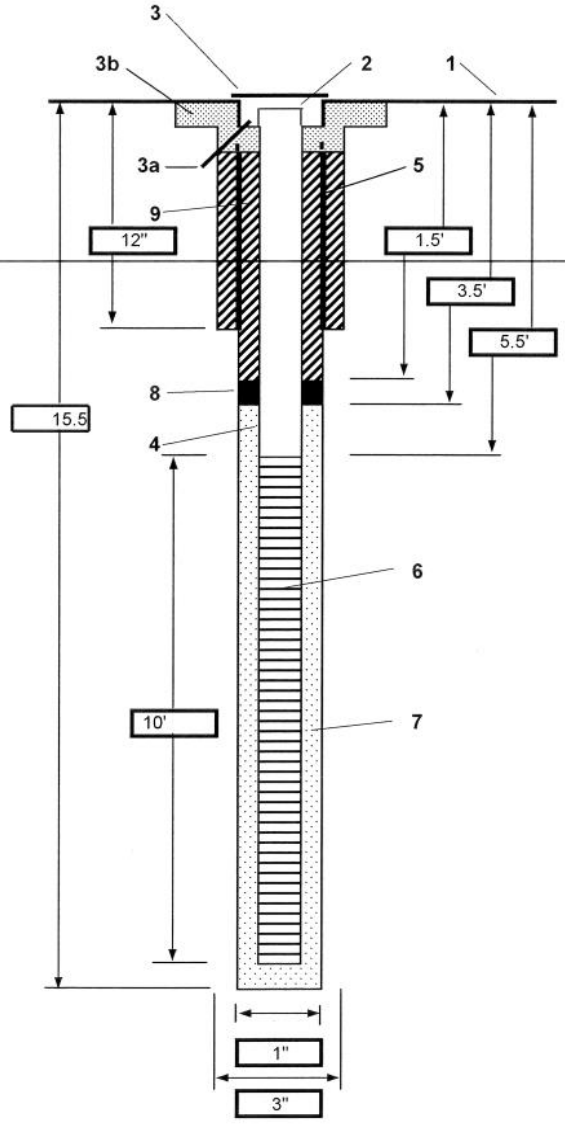

1- Ground elevation at well _____

2- Top of casing elevation _____

3- Wellhead protection cover type: 8" Stainless Steel Roadbox
   a) drain tube? N/A
   b) concrete pad dimensions: 2' diameter circular concrete pad, 6" thick

4- Dia./type of well casing: 1" diameter PVC Schedule 40

5- Dia./type surface casing: N/A

6- Type/slot/size of screen: 1" diameter PVC Schedule 40
   0.010 Machine-Slotted Pre-Pack Screen

7- Type screen filter: N/A - Pre-Pack
   a) Quantity used _____

8- Type of seal: N/A - Pre-Pack Bentonite Collar
   a) Quantity used: 2' long x 2" diameter

9- Grout
   a) Grout mix used: Portland Cement/Bentonite Mix
   b) Method of placement _____
   c) Vol.of surface casing grout _____
   d) Vol. of well casing grout _____

Development method _____

Development time _____

Estimated purge volume _____

Comments _____

PROJECT NUMBER	WELL NUMBER		
314138.PT.SI	**IS47MW23**	SHEET 1	OF 1

CH2MHILL

WELL COMPLETION DIAGRAM

PROJECT : NSF - Indian Head - Site 47 LOCATION : Indian Head, MD

DRILLING CONTRACTOR : Parratt-Wolff, Hillsborough, NC

DRILLING METHOD AND EQUIPMENT USED : CME 55 - Direct-Push Technology

WATER LEVELS : START : 1400 4/16/09 END : 1500 4/16/09 LOGGER : I. Zmudzin/PHL

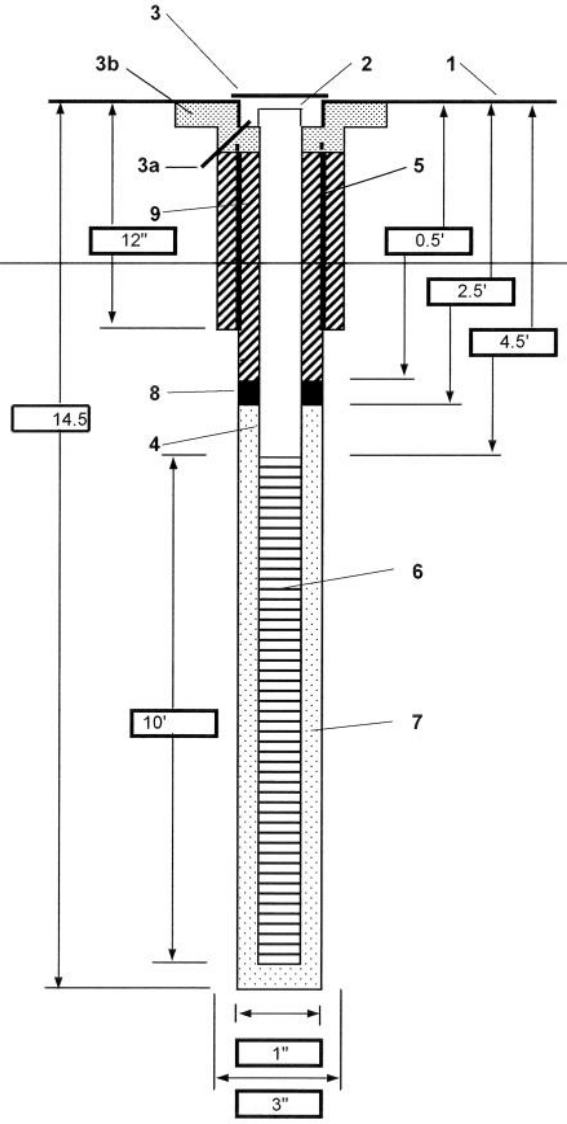

1- Ground elevation at well _____

2- Top of casing elevation _____

3- Wellhead protection cover type: 8" Stainless Steel Roadbox
   a) drain tube? N/A
   b) concrete pad dimensions: 2' diameter circular concrete pad, 6" thick

4- Dia./type of well casing: 1" diameter PVC Schedule 40

5- Dia./type surface casing: N/A

6- Type/slot/size of screen: 1" diameter PVC Schedule 40
   0.010 Machine-Slotted Pre-Pack Screen

7- Type screen filter: N/A - Pre-Pack
   a) Quantity used _____

8- Type of seal: N/A - Pre-Pack Bentonite Collar
   a) Quantity used: 2' long x 2" diameter

9- Grout
   a) Grout mix used: Portland Cement/Bentonite Mix
   b) Method of placement _____
   c) Vol.of surface casing grout _____
   d) Vol. of well casing grout _____

Development method _____

Development time _____

Estimated purge volume _____

Comments _____

PROJECT NUMBER	WELL NUMBER		
314138.PT.SI	**IS47MW24**	SHEET 1	OF 1

CH2MHILL

WELL COMPLETION DIAGRAM

PROJECT : NSF - Indian Head - Site 47 LOCATION : Indian Head, MD

DRILLING CONTRACTOR : Parratt-Wolff, Hillsborough, NC

DRILLING METHOD AND EQUIPMENT USED : CME 55 - Direct-Push Technology

WATER LEVELS : START : 0950 4/16/09 END : LOGGER : I. Zmudzin/PHL

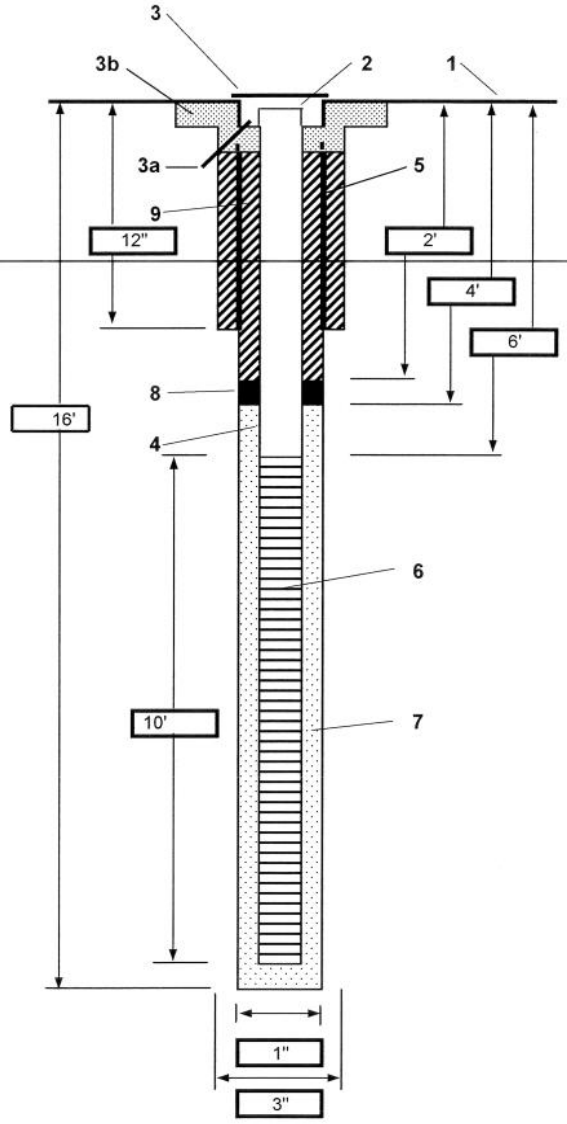

1- Ground elevation at well _____

2- Top of casing elevation _____

3- Wellhead protection cover type: 8" Stainless Steel Roadbox
   a) drain tube? N/A
   b) concrete pad dimensions: 2' diameter circular concrete pad, 6" thick

4- Dia./type of well casing: 1" diameter PVC Schedule 40

5- Dia./type surface casing: N/A

6- Type/slot/size of screen: 1" diameter PVC Schedule 40
   0.010 Machine-Slotted Pre-Pack Screen

7- Type screen filter: N/A - Pre-Pack
   a) Quantity used _____

8- Type of seal: N/A - Pre-Pack Bentonite Collar
   a) Quantity used: 2' long x 2" diameter

9- Grout
   a) Grout mix used: Portland Cement/Bentonite Mix
   b) Method of placement _____
   c) Vol.of surface casing grout _____
   d) Vol. of well casing grout _____

Development method _____

Development time _____

Estimated purge volume _____

Comments _____

LOCID	NCOORD	ECOORD	ELEV	COMMENTS
IS47IW01D	333787.5	1257746	43.57	Top of Casing Elevation: 43.66
IS47IW01S	333782.8	1257747	43.3	Top of Casing Elevation: 43.42
IS47IW02D	333792.1	1257771	43.21	Top of Casing Elevation: 43.35
IS47IW02S	333786.7	1257767	42.86	Top of Casing Elevation: 42.95
IS47IW03D	333782.3	1257761	42.48	Top of Casing Elevation: 42.67
IS47IW03S	333777.4	1257758	42.23	Top of Casing Elevation: 42.22
IS47IW04D	333776.6	1257746	42.86	Top of Casing Elevation: 42.88
IS47IW04S	333771.5	1257749	42.03	Top of Casing Elevation: 42.04
IS47IW05D	333782.7	1257784	43.75	Top of Casing Elevation: 43.7
IS47IW05S	333776.3	1257782	43.29	Top of Casing Elevation: 43.29
IS47IW06D	333765.3	1257768	41.53	Top of Casing Elevation: 41.61
IS47IW06S	333760.4	1257767	41.34	Top of Casing Elevation: 41.35
IS47IW07D	333764.9	1257762	41.42	Top of Casing Elevation: 41.46
IS47IW07S	333757.5	1257758	40.64	Top of Casing Elevation: 40.82
IS47IW08D	333738.6	1257760	39.42	Top of Casing Elevation: 39.51
IS47IW08S	333733.3	1257756	38.83	Top of Casing Elevation: 38.94
IS47IW09D	333745.8	1257769	40.32	Top of Casing Elevation: 40.48
IS47IW09S	333732.3	1257772	40	Top of Casing Elevation: 40.04
IS47IW10D	333747	1257781	41.15	Top of Casing Elevation: 41.33
IS47IW10S	333740.3	1257781	40.88	Top of Casing Elevation: 41
IS47IW11D	333717.3	1257756	39.33	Top of Casing Elevation: 39.36
IS47IW11S	333712.9	1257769	39.37	Top of Casing Elevation: 39.39
IS47IW12D	333726.1	1257780	39.37	Top of Casing Elevation: 39.37
IS47IW12S	333709.2	1257786	39.02	Top of Casing Elevation: 39.12
IS47IW13D	333734.7	1257792	41.61	Top of Casing Elevation: 41.67
IS47IW13S	333727.3	1257793	40.65	Top of Casing Elevation: 40.68
IS47IW14D	333699.6	1257778	39	Top of Casing Elevation: 39.1
IS47IW14S	333706.5	1257793	38.87	Top of Casing Elevation: 39.98
IS47MW01	333869	1257781		
IS47MW02	333791.3	1257674		
IS47MW03	333793	1257757		
IS47MW04	333710.6	1257777		
IS47MW05	333412.3	1257868		
IS47MW06	333556.6	1257684		
IS47MW07	333762.8	1257538		
IS47MW08	333938.1	1257660		
IS47MW09	333903.4	1257903		
IS47MW10	333635.1	1257967		
IS47MW12	333211	1257999		
IS47MW19	333774.6	1257754	41.95	Top of Casing Elevation: 42.08
IS47MW20	333770.5	1257781	42.86	Top of Casing Elevation: 42.9
IS47MW21	333781.6	1257775	42.94	Top of Casing Elevation: 43.01
IS47MW22	333732.1	1257768	39.95	Top of Casing Elevation: 40
IS47MW23	333697.6	1257784	39.01	Top of Casing Elevation: 39.06
IS47MW24	333730.2	1257787	40.89	Top of Casing Elevation: 40.93
IS47SV01	333814.2	1257786	999	
IS47SV02	333786.5	1257693	999	
IS47SV03	333684.7	1257826	999	
IS47SV04	333645.6	1257785	999	
IS47SV05	333649.8	1257736	999	
IS47SV06	333543.6	1257843	999	
IS47SV07	333536.8	1257750	999	
IS47SV08	333406.4	1257822	999	

Appendix C
Raw and Detect Analytical Data

Indian Head
CTO-51 165, Site 47
Groundwater Raw Analytical Results
October 2009, February 2010, July 2010

Station ID	IS47MW01			IS47MW03			IS47MW04				IS47MW05			
Sample ID	IS47MW011009	IS47MW010210	IS47MW010710	IS47MW031009	IS47MW030210	IS47MW030710	IS47MW041009	IS47MW040210	IS47MW040210A	IS47MW040710	IS47MW051009	IS47MW050210	IS47MW05P0210	IS47MW050710
Sample Date	10/15/09	2/3/10	7/7/10	10/15/09	2/3/10	7/6/10	10/14/09	2/3/10	2/3/10	7/6/10	10/13/09	2/4/10	2/4/10	7/8/10
Chemical Name														
Volatile Organic Compounds (UG/L)														
1,1,1-Trichloroethane	1 U	1 U	0.5 U	2 J	NS	0.5 U	4 J	NS	4	6 J	1 U	1 U	1 U	0.5 U
1,1,2,2-Tetrachloroethane	1 U	1 U	0.5 U	5 U	NS	0.5 U	20 U	NS	2	5 U	1 U	1 U	1 U	0.5 U
1,1,2-Trichloro-1,2,2-trifluoroethane(Freon-113)	1 U	1 U	0.5 U	5 U	NS	0.5 U	20 U	NS	1 U	5 U	1 U	1 U	1 U	0.5 U
1,1,2-Trichloroethane	1 U	1 U	0.5 U	5 U	NS	0.5 U	20 U	NS	1 U	5 U	1 U	1 U	1 U	0.5 U
1,1-Dichloroethane	1 U	1 U	0.5 U	5 U	NS	0.5 U	20 U	NS	0.6 J	5 U	1 U	1 U	1 U	0.5 U
1,1-Dichloroethene	1	0.8 J	1.3	5 U	NS	0.5 U	20 U	NS	2	5 U	1 U	1 U	1 U	0.5 U
1,2,4-Trichlorobenzene	1 U	1 U	0.5 U	5 U	NS	0.5 U	20 U	NS	1 U	5 U	1 U	1 U	1 U	0.5 U
1,2-Dibromo-3-chloropropane	2 U	2 U	0.5 U	10 U	NS	0.5 U	40 U	NS	2 U	5 U	2 U	2 U	2 U	0.5 U
1,2-Dibromoethane	1 U	1 U	0.5 U	5 U	NS	0.5 U	20 U	NS	1 U	5 U	1 U	1 U	1 U	0.5 U
1,2-Dichlorobenzene	1 U	1 U	0.5 U	5 U	NS	0.5 U	20 U	NS	1 U	5 U	1 U	1 U	1 U	0.5 U
1,2-Dichloroethane	1 J	1	1.4	1 J	NS	0.5 U	8 J	NS	6	8 J	0.5 J	1 U	0.5 J	0.45 J
1,2-Dichloroethene (total)	19	14	8.4	2 J	NS	1 U	120	NS	40	63	3	5	5	6.1
1,2-Dichloropropane	1 U	1 U	0.5 U	5 U	NS	0.5 U	20 U	NS	1 U	5 U	1 U	1 U	1 U	0.5 U
1,3-Dichlorobenzene	1 U	1 U	0.5 U	5 U	NS	0.5 U	20 U	NS	1 U	5 U	1 U	1 U	1 U	0.5 U
1,4-Dichlorobenzene	1 U	1 U	0.5 U	5 U	NS	0.5 U	20 U	NS	1 U	5 U	1 U	1 U	1 U	0.5 U
2-Butanone	5 U	5 U	2.5 U	25 U	NS	2.5 U	100 U	NS	6	25 U	5 U	5 U	5 U	2.5 U
2-Hexanone	5 U	5 U	2.5 U	25 U	NS	2.5 U	100 U	NS	5 U	25 U	5 U	5 U	5 U	2.5 U
4-Methyl-2-pentanone	5 U	5 U	2.5 U	25 U	NS	2.5 U	100 U	NS	5 U	25 U	5 U	5 U	5 U	2.5 U
Acetone	5 U	5 U	5.1	25 U	NS	6.4	100 U	NS	55	120	4 J	5 U	5 U	2.3 J
Benzene	1 U	1 U	0.5 U	5 U	NS	0.5 U	20 U	NS	0.9 J	5 U	1 U	1 U	1 U	0.5 U
Bromodichloromethane	1 U	1 U	0.5 U	5 U	NS	0.5 U	20 U	NS	0.9 J	5 U	1 U	1 U	1 U	0.5 U
Bromoform	1 U	1 U	0.5 U	5 U	NS	0.5 U	20 U	NS	1 U	5 U	1 U	1 U	1 U	0.5 U
Bromomethane	2 U	2 U	1 U	10 U	NS	1 U	40 U	NS	2	15 J	2 U	2 U	2 U	1 U
Carbon disulfide	1 U	1 U	0.5 U	28	NS	0.5 U	1,700	NS	390	2,700	1 U	1 U	1 U	0.5 U
Carbon tetrachloride	1 U	1 U	0.5 U	9,600	NS	42	27,000	NS	2,700	12,000	1 U	0.3 J	0.6 JB	0.26 J
Chlorobenzene	1 U	1 U	0.5 U	5 U	NS	0.5 U	20 U	NS	1 U	5 U	1 U	1 U	1 U	0.5 U
Chloroethane	2 U	2 U	1 U	10 U	NS	1 U	40 U	NS	2 U	10 U	2 U	2 U	2 U	1 U
Chloroform	1 U	1 U	0.5 U	4,600	NS	42	20,000	NS	8,400	20,000	1 U	1 U	1 U	0.5 U
Chloromethane	2 U	2 U	1 U	10 U	NS	1 U	40 U	NS	14	25	2 U	2 U	2 U	1 U
cis-1,2-Dichloroethene	19	14	8.4	2 J	NS	0.5 U	100	NS	36	55	3	5	5	6.1
cis-1,3-Dichloropropene	1 U	1 U	0.5 U	5 U	NS	0.5 U	20 U	NS	1 U	5 U	1 U	1 U	1 U	0.5 U
Cyclohexane	1 U	1 U	0.5 U	5 U	NS	0.5 U	20 U	NS	1 U	5 U	1 U	1 U	1 U	0.5 U
Dibromochloromethane	1 U	1 U	0.5 U	5 U	NS	0.5 U	20 U	NS	1 U	5 U	1 U	1 U	1 U	0.5 U
Dichlorodifluoromethane (Freon-12)	2 U	2 U	1 U	10 U	NS	1 U	40 U	NS	2 U	10 U	2 U	2 U	2 U	1 U
Ethane	10 U	NS	2 U	10 U	NS	2 U	10 U	NS	NS	2 U	20 U	NS	NS	2 U
Ethene	10 U	NS	2 U	10 U	NS	2 U	10 U	NS	NS	2 U	20 U	NS	NS	2 U
Ethylbenzene	1 U	1 U	0.5 U	5 U	NS	0.5 U	20 U	NS	1 U	5 U	1 U	1 U	1 U	0.5 U
Isopropylbenzene	1 U	1 U	0.5 U	5 U	NS	0.5 U	20 U	NS	1 U	5 U	1 U	1 U	1 U	0.5 U
m- and p-Xylene	2 U	2 U	1 U	10 U	NS	1 U	13 J	NS	2 U	10 U	2 U	2 U	2 U	1 U
Methane	450	NS	320	4.8 J	NS	8.7 J	150	NS	NS	140	1,400	NS	NS	960
Methyl acetate	1 U	1 U	0.75 U	5 U	NS	0.75 U	20 U	NS	1 U	7.5 U	1 U	1 U	1 U	0.75 U
Methylcyclohexane	1 U	1 U	0.5 U	5 U	NS	0.5 U	20 U	NS	1 U	5 U	1 U	1 U	1 U	0.5 U
Methylene chloride	5 U	5 U	2.5 U	19 J	NS	2.5 U	54 J	NS	200	120	5 U	5 U	5 U	2.5 U
Methyl-tert-butyl ether (MTBE)	1 U	1 U	0.5 U	5 U	NS	0.5 U	20 U	NS	1 U	5 U	1 U	1 U	1 U	0.5 U
o-Xylene	1 U	1 U	0.5 U	5 U	NS	0.5 U	20 U	NS	1 U	5 U	1 U	1 U	1 U	0.5 U
Styrene	1 U	1 U	0.5 U	5 U	NS	0.5 U	20 U	NS	1 U	5 U	1 U	1 U	1 U	0.5 U
Tetrachloroethene	3	3	3.4	12	NS	0.41 J	2,200	NS	400	1,000	1 U	1 U	1 U	0.5 U
Toluene	1 U	1 U	0.5 U	25	NS	0.5 U	16 J	NS	6	18	1 U	1 U	1 U	0.5 U
trans-1,2-Dichloroethene	0.4 J	1 U	0.5 U	5 U	NS	0.5 U	12 J	NS	5	7.7 J	1 U	1 U	1 U	0.5 U
trans-1,3-Dichloropropene	1 U	1 U	0.5 U	5 U	NS	0.5 U	20 U	NS	1 U	5 U	1 U	1 U	1 U	0.5 U
Trichloroethene	76	64	89	3 J	NS	0.57 J	88	NS	45	55	1 U	1 U	1 U	0.41 J
Trichlorofluoromethane(Freon-11)	2 U	2 U	1 U	10 U	NS	1 U	40 U	NS	2 U	10 U	2 U	2 U	2 U	1 U
Vinyl chloride	0.8 J	0.4 J	1 U	10 U	NS	1 U	40 U	NS	0.7 J	10 U	4	1 J	1 J	0.76 J
Xylene, total	3 U	3 U	1.5 U	15 U	NS	1.5 U	13 J	NS	3 U	15 U	3 U	3 U	3 U	1.5 U

Indian Head
CTO-51 165, Site 47
Groundwater Raw Analytical Results
October 2009, February 2010, July 2010

Station ID	IS47MW01			IS47MW03			IS47MW04				IS47MW05			
Sample ID	IS47MW011009	IS47MW010210	IS47MW010710	IS47MW031009	IS47MW030210	IS47MW030710	IS47MW041009	IS47MW040210	IS47MW040210A	IS47MW040710	IS47MW051009	IS47MW050210	IS47MW05P0210	IS47MW050710
Sample Date	10/15/09	2/3/10	7/7/10	10/15/09	2/3/10	7/6/10	10/14/09	2/3/10	2/3/10	7/6/10	10/13/09	2/4/10	2/4/10	7/8/10
Chemical Name														
Total Metals (UG/L)														
Aluminum	47 B	63.8 J	47.6 J	549	88,200	65,100	4,120	7,730	NS	20,300	177 B	140 J	153 J	100 U
Antimony	8 U	8 U	5 U	8 U	8 U	2.9 J	8 U	8 U	NS	25 U	8 U	8 U	8 U	2.5 J
Arsenic	39.8	25.2	20.2	8 U	27.9	15.4	121	47.9	NS	135	1.2 B	8 U	2.1 J	5 U
Barium	94.8	79.2	102	8.4	174	128	160	28.7	NS	15.3	48.1	48.3	47.2	42.6
Beryllium	0.17 B	0.17 J	0.11 J	0.21 B	2.3 J	1.6 J	4.8 B	5.3	NS	12.2	0.21 B	0.14 J	0.18 J	0.09 J
Cadmium	10 U	10 U	0.5 U	0.81 B	0.84 J	0.5 U	0.21 B	5.2 J	NS	1 J	10 U	10 U	10 U	0.5 U
Calcium	2,570	2,480	2,940	5,760	4,790	6,340	2,820	11,400	NS	12,900	3,680	4,130	4,040	3,740
Chromium	0.9 B	0.62 J	0.69 J	1.2 B	148	114	4.3 B	105	NS	45.9	2 B	1.4 J	1.1 J	0.92 J
Cobalt	5.6 B	5.2 J	6.9 J	24.9 B	28.9 J	20.7 J	89	198	NS	216	2.7 B	2.3 J	2.4 J	2.5 J
Copper	25 U	25 U	10 U	2.1 B	140	96.6	25 U	18.2 J	NS	4.9 J	25 U	25 U	25 U	10 U
Iron	5,120	4,870	4,460	4,230	132,000	94,300	34,300	64,700	NS	69,600	19,600	30,600	20,600	15,400
Lead	5 U	5 U	2.2 J	1.3 B	92.4	66.6	7.1	78.2	NS	41.2	5 U	5 U	1.1 J	2.2 J
Magnesium	3,300	3,130	3,520	1,660	7,780	5,270	5,120	9,750	NS	10,500	2,040	2,210	2,200	2,070
Manganese	116	103	122	174	456	340	242	520	NS	724	369	414	441	408
Mercury	0.2 U	0.2 U	0.1 U	0.05 B	20.3	11.5	0.07 B	0.44	NS	0.09 J	0.2 U	0.2 U	0.2 U	0.1 U
Nickel	1.3 B	1.1 J	1.4 J	22 B	104	67.8	69.7	122	NS	170	0.79 B	40 U	0.35 J	4 U
Potassium	3,120	2,970	3,180	1,330	8,000	6,710	1,480	3,090	NS	4,000	1,340	1,310	1,320	1,350
Selenium	10 U	10 U	7 U	10 U	10 U	12.1	10 U	10 U	NS	3.9 J	10 U	10 U	10 U	5 J
Silver	15 U	15 U	4 U	1.3 B	87	152	15 U	0.98 J	NS	4 U	15 U	15 U	15 U	4 U
Sodium	38,900	34,600	36,100	3,760	66,600	81,900	15,800	1,620,000	NS	1,250,000	16,000	13,700	13,400	14,300
Thallium	15 U	1.6 J	5 U	15 U	3 J	5 U	15 U	15 U	NS	5 U	15 U	15 U	15 U	5 U
Vanadium	25 U	1.2 J	0.42 J	25 U	228	158	105	126	NS	270	25 U	3 J	1.6 J	4 U
Zinc	27.8	16.6 J	23.2 J	177	366	242	189	352	NS	518	5.4 B	13.4 J	2.3 J	3.8 J
Dissolved Metals (UG/L)														
Aluminum	300 U	21.3 J	100 U	236 B	57,500	1,050	3,850	6,950	NS	20,300	300 U	300 U	300 U	100 U
Antimony	8 U	8 U	5 U	8 U	1.8 J	5 U	8 U	8 U	NS	25 U	8 U	8 U	8 U	5 U
Arsenic	25.2	14.5	16.2	8 U	18.8	2.2 J	116	33.8	NS	137	8 U	8 U	8 U	2.2 J
Barium	91.7	79	97.9	7.7	117	3.5 J	156	28.4	NS	15.3	46.4	44.7	44.1	42.4
Beryllium	0.16 B	0.13 J	0.11 J	0.17 B	1.5 J	0.5 U	4.6 B	5.3	NS	12.4	0.14 B	5 U	5 U	0.07 J
Cadmium	10 U	10 U	0.5 U	0.86 B	0.53 J	0.5 U	0.16 B	4.8 J	NS	1 J	10 U	10 U	10 U	0.5 U
Calcium	2,470	2,500	2,710	5,940	3,090	756	2,860	11,700	NS	13,300	3,810	4,110	4,130	3,890
Chromium	0.96 B	15 U	0.42 J	0.82 B	94.2	4.1 J	4.1 B	77.9	NS	46.4	1.3 B	0.77 J	0.84 J	0.78 J
Cobalt	5.4 B	5.3 J	6.8 J	26.1 B	17.6 J	4 U	86.7	199	NS	219	2.3 B	2.3 J	2.2 J	2.4 J
Copper	25 U	25 U	10 U	3 B	87.2	3.4 J	25 U	15.9 J	NS	2.3 J	25 U	25 U	25 U	10 U
Iron	4,190	2,880	3,840	3,560	80,000	1,480	33,200	58,600	NS	71,000	13,800	15,000	15,000	15,100
Lead	5 U	5 U	1.5 J	5 U	57.4	3.3 J	2.3 B	46.8	NS	40.9	5 U	5 U	1.3 J	2 J
Magnesium	3,210	3,160	3,280	1,660	4,980	159	4,890	9,970	NS	10,600	2,060	2,190	2,200	2,100
Manganese	115	103	116	181	277	6	233	522	NS	737	379	414	407	407
Mercury	0.2 U	0.2 U	0.1 U	0.2 U	15.1	0.68	0.2 U	0.25	NS	0.04 J	0.2 U	0.2 U	0.2 U	0.1 U
Nickel	1 B	0.93 J	1.4 J	22.7 B	66.2	1.1 J	67.8	123	NS	172	0.4 B	0.32 J	40 U	4 U
Potassium	3,340	2,970	3,060	1,340	5,850	795 J	1,370	3,100	NS	3,990	1,330	1,240	1,450	1,360
Selenium	10 U	10 U	7 U	10 U	10 U	7 U	10 U	10 U	NS	3.8 J	10 U	10 U	10 U	7 U
Silver	15 U	15 U	4 U	15 U	52	2.6 J	15 U	1 J	NS	4 U	15 U	15 U	15 U	4 U
Sodium	37,900	35,800	38,100	3,760	61,900	85,800	15,700	1,780,000	NS	1,220,000	16,200	13,600	13,700	14,400
Thallium	15 U	1.7 J	5 U	15 U	2.6 J	5 U	15 U	15 U	NS	5 U	15 U	15 U	15 U	5 U
Vanadium	25 U	0.84 J	4 U	25 U	150	8.2 J	98.4	54.3	NS	274	25 U	0.54 J	0.49 J	4 U
Zinc	14.2 B	15.2 J	20.6 J	182	226	7.2 J	183	355	NS	522	7.6 B	25 U	1.9 J	1.4 J
Wet Chemistry (MG/L)														
Alkalinity	35	NS	26	5 U	NS	150	5 U	NS	NS	4 U	29	NS	NS	35
Chloride	36	36	45	20	5.1	8.2	87	85	NS	130	22	24	23	24
Ferrous iron	4.2	NS	4.2	3.4	NS	0.4	33	NS	NS	90	13	NS	NS	16
Nitrate	0.05 U	0.05 U	0.025 U	1.2	0.31	0.72	0.05 U	0.023 J	NS	0.025 U	0.05 U	0.05 U	0.05 U	0.025 U
Nitrite	0.05 U	0.05 U	0.025 U	0.05 U	0.017 J	0.069	0.05 U	0.05 U	NS	0.016 J	0.05 U	0.05 U	0.05 U	0.01 J
Sulfate	19	20	29	6.4	23	25	22	3,600	NS	3,500	7.3	6.9	6.8	7.5
Sulfide	1.6	1 U	0.98 J	3.2	3.4	3.5	1 U	1 U	NS	0.75 U	1 U	1.7	1 U	0.75 U

Notes:

B - Analyte not detected above the level reported in blanks
precise
precise. Analyte not detected above the level reported in blanks.
NS - Not sampled
U - The material was analyzed for, but not detected
MG/L - Milligrams per liter
UG/L - Micrograms per liter

Indian Head
CTO-51 165, Site 47
Groundwater Raw Analytical Results
October 2009, February 2010, July 2010

Station ID	IS47MW19			IS47MW20			IS47MW21				IS47MW22			
Sample ID	IS47MW191009	IS47MW190210	IS47MW190710	IS47MW201009	IS47MW200210	IS47MW200710	IS47MW211009	IS47MW210210	IS47MW210210A	IS47MW210710	IS47MW221009	IS47MW220210	IS47MW220710	IS47MW22P0710
Sample Date	10/15/09	2/3/10	7/8/10	10/14/09	2/3/10	7/7/10	10/15/09	2/3/10	2/3/10	7/7/10	10/14/09	2/4/10	7/8/10	7/8/10
Chemical Name														
Volatile Organic Compounds (UG/L)														
1,1,1-Trichloroethane	100 U	NS	5 U	12 J	NS	50 U	23 J	NS	7	6 J	12 J	200 U	100 U	100 U
1,1,2,2-Tetrachloroethane	100 U	NS	5 U	20 U	NS	50 U	100 U	NS	1 U	5 U	50 U	200 U	100 U	100 U
1,1,2-Trichloro-1,2,2-trifluoroethane(Freon-113)	100 U	NS	5 U	20 U	NS	50 U	100 U	NS	1 U	5 U	50 U	200 U	100 U	100 U
1,1,2-Trichloroethane	100 U	NS	5 U	20 U	NS	50 U	100 U	NS	1 U	5 U	50 U	200 U	100 U	100 U
1,1-Dichloroethane	100 U	NS	5 U	20 U	NS	50 U	100 U	NS	1 U	5 U	50 U	200 U	100 U	100 U
1,1-Dichloroethene	100 U	NS	5 U	20 U	NS	50 U	100 U	NS	1 U	5 U	50 U	200 U	100 U	100 U
1,2,4-Trichlorobenzene	100 U	NS	5 U	20 U	NS	50 U	100 U	NS	1 U	5 U	50 U	200 U	100 U	100 U
1,2-Dibromo-3-chloropropane	200 U	NS	5 U	40 U	NS	50 U	200 U	NS	2 U	5 U	100 U	400 U	100 U	100 U
1,2-Dibromoethane	100 U	NS	5 U	20 U	NS	50 U	100 U	NS	1 U	5 U	50 U	200 U	100 U	100 U
1,2-Dichlorobenzene	100 U	NS	5 U	20 U	NS	50 U	100 U	NS	1 U	5 U	50 U	200 U	100 U	100 U
1,2-Dichloroethane	100 U	NS	5 U	20 U	NS	50 U	100 U	NS	8	15	16 J	200 U	100 U	100 U
1,2-Dichloroethene (total)	200 U	NS	10 U	40 U	NS	100 U	200 U	NS	6	49	220	400 U	200 U	200 U
1,2-Dichloropropane	100 U	NS	5 U	20 U	NS	50 U	100 U	NS	1 U	5 U	50 U	200 U	100 U	100 U
1,3-Dichlorobenzene	100 U	NS	5 U	20 U	NS	50 U	100 U	NS	1 U	5 U	50 U	200 U	100 U	100 U
1,4-Dichlorobenzene	100 U	NS	5 U	20 U	NS	50 U	100 U	NS	1 U	5 U	50 U	200 U	100 U	100 U
2-Butanone	500 U	NS	25 U	100 U	NS	250 U	500 U	NS	55	48 J	250 U	1000 U	500 U	500 U
2-Hexanone	500 U	NS	25 U	100 U	NS	250 U	500 U	NS	5 U	25 U	250 U	1000 U	500 U	500 U
4-Methyl-2-pentanone	500 U	NS	25 U	100 U	NS	250 U	500 U	NS	5 U	25 U	250 U	1000 U	500 U	500 U
Acetone	500 U	NS	78	100 U	NS	450 J	500 U	NS	610	580	250 U	1000 U	750 J	850 J
Benzene	100 U	NS	5 U	20 U	NS	50 U	100 U	NS	2	5 U	50 U	200 U	100 U	100 U
Bromodichloromethane	100 U	NS	5 U	20 U	NS	50 U	100 U	NS	2	5 U	50 U	200 U	100 U	100 U
Bromoform	100 U	NS	5 U	20 U	NS	50 U	100 U	NS	1 U	5 U	50 U	200 U	100 U	100 U
Bromomethane	200 U	NS	10 U	40 U	NS	100 U	200 U	NS	2 J	10 U	100 U	120 J	200 U	200 U
Carbon disulfide	1,100	NS	15	240	NS	2,200	2,300	NS	900	340	4,700	3,500	14,000	11,000
Carbon tetrachloride	150,000	NS	1,600	29,000	NS	30,000	93,000	NS	17,000	1,700	69,000	280,000	220,000	170,000
Chlorobenzene	100 U	NS	5 U	20 U	NS	50 U	100 U	NS	1 U	5 U	50 U	200 U	100 U	100 U
Chloroethane	200 U	NS	10 U	40 U	NS	100 U	200 U	NS	0.7 J	10 U	100 U	400 U	200 U	200 U
Chloroform	37,000	NS	1,200	27,000	NS	61,000	44,000	NS	14,000	16,000	23,000	26,000	30,000	32,000
Chloromethane	200 U	NS	10 U	40 U	NS	100 U	200 U	NS	40	9.1 J	100 U	230 J	100 J	120 J
cis-1,2-Dichloroethene	100 U	NS	5 U	20 U	NS	50 U	100 U	NS	5	45	190	200 U	100 U	100 U
cis-1,3-Dichloropropene	100 U	NS	5 U	20 U	NS	50 U	100 U	NS	1 U	5 U	50 U	200 U	100 U	100 U
Cyclohexane	100 U	NS	5 U	20 U	NS	50 U	100 U	NS	1 U	5 U	50 U	200 U	100 U	100 U
Dibromochloromethane	100 U	NS	5 U	20 U	NS	50 U	100 U	NS	1 U	5 U	50 U	200 U	100 U	100 U
Dichlorodifluoromethane (Freon-12)	200 U	NS	10 U	40 U	NS	100 U	200 U	NS	2 U	10 U	100 U	400 U	200 U	200 U
Ethane	10 U	NS	2 U	10 U	NS	2 U	10 U	NS	NS	2 U	10 U	NS	2 U	2 U
Ethene	10 U	NS	2 U	10 U	NS	2 U	10 U	NS	NS	2 U	2.6 J	NS	2 U	2 U
Ethylbenzene	100 U	NS	5 U	20 U	NS	50 U	47 J	NS	1 U	5 U	50 U	200 U	100 U	100 U
Isopropylbenzene	100 U	NS	5 U	20 U	NS	50 U	100 U	NS	1 U	5 U	50 U	200 U	100 U	100 U
m- and p-Xylene	66 J	NS	10 U	40 U	NS	100 U	160 J	NS	2 U	10 U	100 U	400 U	200 U	200 U
Methane	40	NS	64	3 J	NS	100	52	NS	NS	180	200	NS	84	87
Methyl acetate	100 U	NS	7.5 U	20 U	NS	75 U	100 U	NS	1 U	7.5 U	50 U	200 U	150 U	150 U
Methylcyclohexane	100 U	NS	5 U	20 U	NS	50 U	100 U	NS	1 U	5 U	50 U	200 U	100 U	100 U
Methylene chloride	500 U	NS	25 U	100 U	NS	240 J	500 U	NS	27	84	250 U	1000 U	500 U	500 U
Methyl-tert-butyl ether (MTBE)	100 U	NS	5 U	20 U	NS	50 U	100 U	NS	1 U	5 U	50 U	200 U	100 U	100 U
o-Xylene	100 U	NS	5 U	20 U	NS	50 U	39 J	NS	1 U	5 U	50 U	200 U	100 U	100 U
Styrene	100 U	NS	5 U	20 U	NS	50 U	100 U	NS	1 U	5 U	50 U	200 U	100 U	100 U
Tetrachloroethene	100 U	NS	5 U	29	NS	77 J	100 U	NS	33	51	1,300	730	890	700
Toluene	83 J	NS	5 U	46	NS	120	230	NS	8	15	44 J	200 U	84 J	70 J
trans-1,2-Dichloroethene	100 U	NS	5 U	20 U	NS	50 U	100 U	NS	0.6 J	4.3 J	32 J	200 U	100 U	100 U
trans-1,3-Dichloropropene	100 U	NS	5 U	20 U	NS	50 U	100 U	NS	1 U	5 U	50 U	200 U	100 U	100 U
Trichloroethene	100 U	NS	5 U	20 U	NS	50 U	100 U	NS	6	9.8 J	250	200 U	100 U	100 U
Trichlorofluoromethane(Freon-11)	200 U	NS	10 U	40 U	NS	100 U	200 U	NS	2 U	10 U	100 U	400 U	200 U	200 U
Vinyl chloride	200 U	NS	10 U	40 U	NS	100 U	200 U	NS	2 U	10 U	100 U	400 U	200 U	200 U
Xylene, total	66 J	NS	15 U	60 U	NS	150 U	200 J	NS	3 U	15 U	150 U	600 U	300 U	300 U

Indian Head
CTO-51 165, Site 47
Groundwater Raw Analytical Results
October 2009, February 2010, July 2010

Station ID	IS47MW19			IS47MW20			IS47MW21				IS47MW22			
Sample ID	IS47MW191009	IS47MW190210	IS47MW190710	IS47MW201009	IS47MW200210	IS47MW200710	IS47MW211009	IS47MW210210	IS47MW210210A	IS47MW210710	IS47MW221009	IS47MW220210	IS47MW220710	IS47MW22P0710
Sample Date	10/15/09	2/3/10	7/8/10	10/14/09	2/3/10	7/7/10	10/15/09	2/3/10	2/3/10	7/7/10	10/14/09	2/4/10	7/8/10	7/8/10
Chemical Name														
Total Metals (UG/L)														
Aluminum	21,600	37,600	282,000	1,860	69,100	22,800	3,680	18,800	NS	2,770	4,540	9,780	26,200	28,600
Antimony	8 U	22.3	5 U	8 U	4.8 J	15.3 J	1.4 B	4.9 J	NS	17.6 J	8 U	8 U	15 U	10 U
Arsenic	30.7	438	224	31.6	200	61.6	25.8	93.7	NS	106	85.2	14.3 J	44.5	53.6
Barium	166	47.7	335	259	94.3	38.5	89.2	58.6	NS	15.2 J	197	70.9	24.4 J	21.9
Beryllium	2.1 B	2.6 J	6.2 J	1.6 B	2.9 J	0.82 J	2.1 B	9.3	NS	0.35 J	5.5	2.1 J	9.8 J	9.9 J
Cadmium	0.91 B	20 U	1 U	1.3 B	0.25 J	2.5 U	1.4 B	4.5 J	NS	2.5 U	0.93 B	5.8 J	5.5 J	5.4 J
Calcium	11,700	9,400	12,300	9,960	4,100	1,000	11,700	69,700	NS	14,900	3,110	51,200	14,000	11,500
Chromium	58.6	2,000	460	4.8 B	441	108	3.3 B	1,080	NS	197	5.5 B	872	202	148
Cobalt	61.7	22.2 J	73	51.9	17.6 J	7.5 J	64.8	783	NS	64.5 J	90.8	356	334	278
Copper	45.8	143	322	55.2	183	93.8 J	1.9 B	308	NS	93.2 J	25 U	277	170	169
Iron	54,800	27,400	332,000	15,000	24,800	18,700	14,100	38,500	NS	9,190	35,400	5,680	44,800	42,500
Lead	33.3	19.2	265	5	29.9	26.7	3.2 B	6.6	NS	20 U	5.5	25 U	36.2	32.8
Magnesium	6,420	3,960	17,600	6,290	5,150	1,710	5,600	60,100	NS	10,600	5,180	31,400	13,700	12,200
Manganese	430	84.5	919	209	65.4	43	194	2,840	NS	499	259	743	933	754
Mercury	2.6	12.1	140	0.03 B	2.5	3.8	0.2 U	34.7	NS	3.7	0.2 U	0.36	0.42	0.3
Nickel	68.3	59.4 J	248	66.1	56	27 J	54.6	431	NS	44.2 J	79.2	283 J	220	193
Potassium	4,600	11,900	15,300	2,460	9,330	4,350 J	1,970	21,300	NS	9,290	1,860	9,290	6,740	5,240
Selenium	10 U	109	27.7	10 U	17.3	35 U	10 U	74.4	NS	123	10 U	43.8 J	24.8 J	12.1 J
Silver	0.82 B	7.8 J	49.8	15 U	3.2 J	20 U	15 U	9.1 J	NS	20 U	15 U	15 U	20 U	4 U
Sodium	9,410	9,420,000	527,000	19,400	2,720,000	1,400,000	15,100	11,000,000	NS	8,600,000	15,700	5,310,000	2,020,000	2,460,000
Thallium	15 U	10.3 J	1.9 J	15 U	4.7 J	25 U	15 U	15 U	NS	25 U	15 U	15 U	25 U	5 U
Vanadium	115	2,160	1,300	25 U	786	169	16.9 B	696	NS	396	81.6	23.9 J	24.4 J	22.7 J
Zinc	161	55.4	582	245	86.2	55.7 J	167	466	NS	120	211	313	661	628
Dissolved Metals (UG/L)														
Aluminum	2,290	32,400	223,000	1,890	29,600	4,400	3,560	12,400	NS	1,390 J	4,220	9,320	24,300	23,300
Antimony	8 U	9 J	15 U	8 U	5.3 J	26.5 J	8 U	6.4 J	NS	50 U	8 U	8 U	10 U	10 U
Arsenic	14	373	223	34.4	193	51.4	26.9	57.5	NS	108	79.6	24 J	49.2	44.8
Barium	129	34.2	272	256	23	7 J	86.7	58.4	NS	11.7 J	197	69.4	17.8	17.6
Beryllium	1.3 B	2.1 J	4.6 J	1.8 B	1.2 J	0.28 J	2.1 B	8.6	NS	0.21 J	5.4	2 J	10	9.7 J
Cadmium	0.72 B	20 U	2.5 U	1.3 B	10 U	2.5 U	1.4 B	4.9 J	NS	2.5 U	0.85 B	5.7 J	5.8 J	5.8 J
Calcium	11,400	7,780	9,680	10,500	3,490	855	11,300	82,400	NS	14,800	3,340	50,900	12,400	12,200
Chromium	4.9 B	1,580	385	3.9 B	329	42.5 J	3.6 B	1,110	NS	153	5 B	867	133	162
Cobalt	50.3	16.6 J	56.7 J	54.2	4.4 J	20 U	63.4	936	NS	61.6 J	94	351	297	295
Copper	25 U	109	247	52.2	98.5	30.3 J	1.1 B	240	NS	46.2 J	25 U	268	145	147
Iron	22,800	20,700	257,000	14,800	5,200	1,990	13,600	29,900	NS	4,810	35,000	5,120	41,700	40,500
Lead	3.6 B	11.8	194	5.1	7.4	6.3 J	3.3 B	2.7 J	NS	20 U	5.2	25 U	27	27.8
Magnesium	4,880	2,880	14,000	6,540	1,270	303	5,470	71,300	NS	10,500	5,420	31,600	12,800	12,700
Manganese	352	62.6	664	218	14.5	3.4 J	192	3,310	NS	462	275	745	826	821
Mercury	0.2 U	24.1	78.1	0.2 U	3.1	0.57	0.2 U	16.5	NS	1.6	0.2 U	0.18 J	0.04 J	0.06 J
Nickel	49.8	46.5 J	204	69.2	16.3 J	5.4 J	53.6	505	NS	42 J	78.1	286 J	202	200
Potassium	3,070	10,100	15,800	2,370	3,930	2,210 J	1,900	25,800	NS	9,370	2,000	9,270	5,220	4,760
Selenium	10 U	82.7	64	10 U	15.5	35 U	10 U	91.4	NS	120	10 U	45.1 J	16.7 J	23.4
Silver	15 U	4.3 J	29.2 J	15 U	1 J	20 U	15 U	4.1 J	NS	20 U	15 U	15 U	4 U	4 U
Sodium	10,300	7,420,000	1,400,000	20,500	2,720,000	1,370,000	14,700	11,000,000	NS	8,440,000	16,200	5,100,000	2,630,000	2,540,000
Thallium	15 U	10 J	25 U	15 U	4.9 J	25 U	1.5 B	15 U	NS	25 U	15 U	15 U	5 U	5 U
Vanadium	16.3 B	1,820	1,380	25 U	721	130	16.2 B	544	NS	373	77.4	20.8 J	12.5 J	12.6 J
Zinc	112	44.8 J	454	253	19.6 J	11.6 J	162	507	NS	10.6 J	205	313	632	617
Wet Chemistry (MG/L)														
Alkalinity	5 U	NS	830	5 U	NS	480	5 U	NS	NS	1,600	5 U	NS	12	14
Chloride	65	230	88	79	290	420	80	320	NS	280	94	230	250	240
Ferrous iron	18	NS	2	16	NS	1.4	15	NS	NS	1.6	34	NS	58	52
Nitrate	1.2	4.9	0.125 U	0.39	0.44	0.025 U	0.98	0.6	NS	0.05 U	0.05 U	1.2	0.025 U	0.025 U
Nitrite	0.05 U	0.51	0.15 J	0.05 U	0.19 J	0.043 J	0.05 U	0.028 J	NS	0.23	0.05 U	0.034 J	0.029 J	0.027 J
Sulfate	24	15,000	1,900	21	3,900	2,100	18	21,000	NS	16,000	22	10,000	5,300	5,400
Sulfide	1 U	1 U	0.75 U	1 U	1 U	0.83 J	1 U	1 U	NS	0.75 U	1 U	1 U	0.75 U	0.75 U

Notes:

B - Analyte not detected above the level reported in blanks
precise
precise. Analyte not detected above the level reported in blanks.
NS - Not sampled
U - The material was analyzed for, but not detected
MG/L - Milligrams per liter
UG/L - Micrograms per liter

Indian Head
CTO-51 165, Site 47
Groundwater Raw Analytical Results
October 2009, February 2010, July 2010

Station ID	IS47MW23			IS47MW24			
Sample ID	IS47MW231009	IS47MW230210	IS47MW230710	IS47MW241009	IS47MW24P1009	IS47MW240210	IS47MW240710
Sample Date	10/14/09	2/3/10	7/7/10	10/14/09	10/14/09	2/3/10	7/7/10
Chemical Name							
Volatile Organic Compounds (UG/L)							
1,1,1-Trichloroethane	1 U	3	2.4 J	2	2	5	3 J
1,1,2,2-Tetrachloroethane	1 U	4	2.5 U	1 U	2 U	1 U	2.5 U
1,1,2-Trichloro-1,2,2-trifluoroethane(Freon-113)	1 U	1 U	2.5 U	1 U	2 U	1 U	2.5 U
1,1,2-Trichloroethane	1 U	1 U	2.5 U	1 U	2 U	1 U	2.5 U
1,1-Dichloroethane	0.5 J	0.5 J	2.5 U	0.7 J	0.6 J	1 U	2.5 U
1,1-Dichloroethene	3	1 U	2.5 U	2	2	1 U	2.5 U
1,2,4-Trichlorobenzene	1 U	1 U	2.5 U	1 U	2 U	1 U	2.5 U
1,2-Dibromo-3-chloropropane	2 U	2 U	2.5 U	2 U	4 U	2 U	2.5 U
1,2-Dibromoethane	1 U	1 U	2.5 U	1 U	2 U	1 U	2.5 U
1,2-Dichlorobenzene	1 U	1 U	2.5 U	1 U	2 U	1 U	2.5 U
1,2-Dichloroethane	0.9 J	8	7.1	2	2 J	2	1.3 U
1,2-Dichloroethene (total)	19	390	510	20	13	3	2.9 J
1,2-Dichloropropane	1 U	1 U	2.5 U	1 U	2 U	1 U	2.5 U
1,3-Dichlorobenzene	1 U	1 U	2.5 U	1 U	2 U	1 U	2.5 U
1,4-Dichlorobenzene	1 U	1 U	2.5 U	1 U	2 U	1 U	2.5 U
2-Butanone	5 U	15	11 J	5 U	10 U	24	12 U
2-Hexanone	5 U	5 U	12 U	5 U	10 U	5 U	12 U
4-Methyl-2-pentanone	5 U	5 U	12 U	5 U	10 U	5 U	12 U
Acetone	4 J	160	190	8	11	270	92
Benzene	1 U	1	1.4 J	1 U	2 U	1	2.5 U
Bromodichloromethane	1 U	3	2.5 U	1 U	2 U	0.5 J	2.5 U
Bromoform	1 U	1 U	2.5 U	1 U	2 U	1 U	2.5 U
Bromomethane	2 U	9	5 U	2 U	4 U	40	11
Carbon disulfide	1 U	1,300	390	12	11	79	370
Carbon tetrachloride	0.3 J	3,200	830	420	460	1,200	1,500
Chlorobenzene	1 U	1 U	2.5 U	1 U	2 U	1 U	2.5 U
Chloroethane	2 U	2 U	5 U	2 U	4 U	0.9 J	5 U
Chloroform	6	13,000	6,600	5,600	5,800	6,900	6,400
Chloromethane	2 U	24	18	2 U	4 U	65	10 J
cis-1,2-Dichloroethene	19	340	480	19	13	2	2.9 J
cis-1,3-Dichloropropene	1 U	1 U	2.5 U	1 U	2 U	1 U	2.5 U
Cyclohexane	1 U	1 U	2.5 U	1 U	2 U	1 U	2.5 U
Dibromochloromethane	1 U	1 U	2.5 U	1 U	2 U	1 U	2.5 U
Dichlorodifluoromethane (Freon-12)	2 U	2 U	5 U	2 U	4 U	2 U	5 U
Ethane	10 U	NS	2 U	10 U	10 U	NS	2 U
Ethene	10 U	NS	2 U	10 U	10 U	NS	1.4 J
Ethylbenzene	1 U	1 U	2.5 U	1 U	2 U	1 U	2.5 U
Isopropylbenzene	1 U	1 U	2.5 U	1 U	2 U	1 U	2.5 U
m- and p-Xylene	2 U	2 U	5 U	2 U	4 U	2 U	5 U
Methane	28	NS	550	16	5 J	NS	23
Methyl acetate	1 U	1 U	3.75 U	1 U	2 U	1 U	3.75 U
Methylcyclohexane	1 U	1 U	2.5 U	1 U	2 U	1 U	2.5 U
Methylene chloride	5 U	100	85	18	18	15	21 J
Methyl-tert-butyl ether (MTBE)	1 U	1 U	2.5 U	1 U	2 U	1 U	2.5 U
o-Xylene	1 U	1 U	2.5 U	1 U	2 U	1 U	2.5 U
Styrene	1 U	1 U	2.5 U	1 U	2 U	1 U	2.5 U
Tetrachloroethene	95	2,700	1,200	42	34	25	16
Toluene	1 U	1	2.8 J	6	7	2	7.3
trans-1,2-Dichloroethene	0.7 J	46	28	0.9 J	0.6 J	0.4 J	2.5 U
trans-1,3-Dichloropropene	1 U	1 U	2.5 U	1 U	2 U	1 U	2.5 U
Trichloroethene	20	390	420	7	6	2	1.8 J
Trichlorofluoromethane(Freon-11)	2 U	2 U	5 U	2 U	4 U	2 U	5 U
Vinyl chloride	0.3 J	0.6 J	2.1 J	1 J	1 J	2 U	5 U
Xylene, total	3 U	3 U	7.5 U	3 U	6 U	3 U	7.5 U

Indian Head
CTO-51 165, Site 47
Groundwater Raw Analytical Results
October 2009, February 2010, July 2010

Station ID	IS47MW23			IS47MW24			
Sample ID	IS47MW231009	IS47MW230210	IS47MW230710	IS47MW241009	IS47MW24P1009	IS47MW240210	IS47MW240710
Sample Date	10/14/09	2/3/10	7/7/10	10/14/09	10/14/09	2/3/10	7/7/10
Chemical Name							
Total Metals (UG/L)							
Aluminum	790	28,200	12,200	459	594	25,400	80,500
Antimony	8 U	8 U	50 U	8 U	8 U	8 U	25 U
Arsenic	21.8	44.2	79.1	27.5	29.2	20.2	41.8
Barium	115	20.5	36	145	146	41.8	201
Beryllium	0.85 B	9.4	1.4 J	1.6 B	1.6 B	2.6 J	2.4 J
Cadmium	10 U	15.4	0.76 J	0.41 B	0.31 B	1.4 J	0.5 U
Calcium	2,550	17,400	38,300	3,200	3,020	20,000	14,600
Chromium	3.7 B	306	75.5	1.3 B	1.9 B	300	162
Cobalt	29.6 B	206	83.9 J	45.7	43.5	198	166
Copper	25 U	144	90.4 J	2.7 B	25 U	134	115
Iron	9,330	20,600	16,600	9,880	11,300	18,000	72,800
Lead	2.1 B	14.4	9.4 J	2.6 B	2.4 B	64.2	71.9
Magnesium	1,480	7,970	15,800	2,520	2,460	10,800	11,700
Manganese	85.4	415	673	148	147	599	625
Mercury	0.08 B	0.25	0.62	0.2 U	0.03 B	0.89	12.2
Nickel	20.4 B	123	72.9 J	32.7 B	31.8 B	135	145
Potassium	1,180	3,600	7,750	2,270	2,080	8,670	9,140
Selenium	10 U	6.2 J	51	10 U	10 U	6.2 J	10.6
Silver	15 U	15 U	20 U	15 U	15 U	15 U	5.1 J
Sodium	21,200	2,700,000	3,790,000	19,600	19,900	1,790,000	719,000
Thallium	15 U	15 U	25 U	15 U	15 U	15 U	5 U
Vanadium	7.6 B	591	1,120	25 U	25 U	146	202
Zinc	42	471	143	74	72.6	181	225
Dissolved Metals (UG/L)							
Aluminum	113 B	8,710	8,960	410	412	5,040	857
Antimony	8 U	8 U	50 U	8 U	8 U	8 U	25 U
Arsenic	20	16.3	51.6	26.7	26.8	7.6 J	7 J
Barium	113	11.6	28.2	149	148	15.1	104
Beryllium	0.8 B	2.9 J	0.53 J	1.6 B	1.6 B	1.6 J	0.66 J
Cadmium	10 U	11.2	2.5 U	0.34 B	0.3 B	1.4 J	0.25 J
Calcium	2,920	14,300	37,000	3,250	3,220	22,600	14,700
Chromium	1.7 B	123	34.8 J	1.3 B	1.3 B	216	21.4
Cobalt	29.9 B	199	56.6 J	47.1	45.8	218	155
Copper	25 U	95	48.6 J	25 U	25 U	83.1	21.8 J
Iron	8,010	7,480	6,340	9,940	9,970	803	5,340
Lead	5 U	3.4 J	4.2 J	2.2 B	2.6 B	12.6	3.1 J
Magnesium	1,640	8,100	15,600	2,580	2,570	11,200	7,720
Manganese	91.9	372	563	153	153	621	499
Mercury	0.2 U	0.08 J	0.42	0.2 U	0.2 U	0.69	0.23
Nickel	20.7 B	118	62.6 J	33.5 B	32.3 B	135	102
Potassium	1,240	4,050	7,750	2,210	2,050	7,980	5,650
Selenium	10 U	17.2	29.3 J	10 U	3.6 B	6.4 J	5.6 J
Silver	15 U	15 U	20 U	15 U	15 U	15 U	4 U
Sodium	21,400	3,220,000	3,500,000	20,100	20,100	2,090,000	742,000
Thallium	15 U	15 U	25 U	15 U	15 U	15 U	5 U
Vanadium	25 U	254	812	25 U	25 U	33.2	3.7 J
Zinc	39.8	310	42.1 J	75.9	76.2	154	131
Wet Chemistry (MG/L)							
Alkalinity	5 U	NS	740	5 U	5 U	NS	13
Chloride	37	120	120	45	45	64	64
Ferrous iron	6.3	NS	15	8.7	10	NS	2.4
Nitrate	0.025 J	0.26	0.044 J	0.05 U	0.05 U	0.46	0.025 U
Nitrite	0.05 U	0.021 J	0.039 J	0.05 U	0.05 U	0.042 J	0.025 U
Sulfate	19	5,100	8,100	26	26	2,800	1,700
Sulfide	1 U	1 U	0.75 U	1 U	1 U	1 U	0.75 U

Notes:

B - Analyte not detected above the level reported in blanks
precise
precise. Analyte not detected above the level reported in blanks.
NS - Not sampled
U - The material was analyzed for, but not detected
MG/L - Milligrams per liter
UG/L - Micrograms per liter

Indian Head
CTO-51 165, Site 47
Groundwater Detected Analytical Results
October 2009, February 2010, July 2010

Station ID	IS47MW01			IS47MW03			IS47MW04				IS47MW05			
Sample ID	IS47MW011009	IS47MW010210	IS47MW010710	IS47MW031009	IS47MW030210	IS47MW030710	IS47MW041009	IS47MW040210	IS47MW040210A	IS47MW040710	IS47MW051009	IS47MW050210	IS47MW05P0210	IS47MW050710
Sample Date	10/15/09	2/3/10	7/7/10	10/15/09	2/3/10	7/6/10	10/14/09	2/3/10	2/3/10	7/6/10	10/13/09	2/4/10	2/4/10	7/8/10
Chemical Name														
Volatile Organic Compounds (UG/L)														
1,1,1-Trichloroethane	1 U	1 U	0.5 U	2 J	NS	0.5 U	4 J	NS	4	6 J	1 U	1 U	1 U	0.5 U
1,1,2,2-Tetrachloroethane	1 U	1 U	0.5 U	5 U	NS	0.5 U	20 U	NS	2	5 U	1 U	1 U	1 U	0.5 U
1,1-Dichloroethane	1 U	1 U	0.5 U	5 U	NS	0.5 U	20 U	NS	0.6 J	5 U	1 U	1 U	1 U	0.5 U
1,1-Dichloroethene	1	0.8 J	1.3	5 U	NS	0.5 U	20 U	NS	2	5 U	1 U	1 U	1 U	0.5 U
1,2-Dichloroethane	1 J	1	1.4	1 J	NS	0.5 U	8 J	NS	6	8 J	0.5 J	1 U	0.5 J	0.45 J
1,2-Dichloroethene (total)	19	14	8.4	2 J	NS	1 U	120	NS	40	63	3	5	5	6.1
2-Butanone	5 U	5 U	2.5 U	25 U	NS	2.5 U	100 U	NS	6	25 U	5 U	5 U	5 U	2.5 U
Acetone	5 U	5 U	5.1	25 U	NS	6.4	100 U	NS	55	120	4 J	5 U	5 U	2.3 J
Benzene	1 U	1 U	0.5 U	5 U	NS	0.5 U	20 U	NS	0.9 J	5 U	1 U	1 U	1 U	0.5 U
Bromodichloromethane	1 U	1 U	0.5 U	5 U	NS	0.5 U	20 U	NS	0.9 J	5 U	1 U	1 U	1 U	0.5 U
Bromomethane	2 U	2 U	1 U	10 U	NS	1 U	40 U	NS	2	15 J	2 U	2 U	2 U	1 U
Carbon disulfide	1 U	1 U	0.5 U	28	NS	0.5 U	1,700	NS	390	2,700	1 U	1 U	1 U	0.5 U
Carbon tetrachloride	1 U	1 U	0.5 U	9,600	NS	42	27,000	NS	2,700	12,000	1 U	0.3 J	0.6 JB	0.26 J
Chloroethane	2 U	2 U	1 U	10 U	NS	1 U	40 U	NS	2 U	10 U	2 U	2 U	2 U	1 U
Chloroform	1 U	1 U	0.5 U	4,600	NS	42	20,000	NS	8,400	20,000	1 U	1 U	1 U	0.5 U
Chloromethane	2 U	2 U	1 U	10 U	NS	1 U	40 U	NS	14	25	2 U	2 U	2 U	1 U
cis-1,2-Dichloroethene	19	14	8.4	2 J	NS	0.5 U	100	NS	36	55	3	5	5	6.1
Ethene	10 U	NS	2 U	10 U	NS	2 U	10 U	NS	NS	2 U	20 U	NS	NS	2 U
Ethylbenzene	1 U	1 U	0.5 U	5 U	NS	0.5 U	20 U	NS	1 U	5 U	1 U	1 U	1 U	0.5 U
m- and p-Xylene	2 U	2 U	1 U	10 U	NS	1 U	13 J	NS	2 U	10 U	2 U	2 U	2 U	1 U
Methane	450	NS	320	4.8 J	NS	8.7 J	150	NS	NS	140	1,400	NS	NS	960
Methylene chloride	5 U	5 U	2.5 U	19 J	NS	2.5 U	54 J	NS	200	120	5 U	5 U	5 U	2.5 U
o-Xylene	1 U	1 U	0.5 U	5 U	NS	0.5 U	20 U	NS	1 U	5 U	1 U	1 U	1 U	0.5 U
Tetrachloroethene	3	3	3.4	12	NS	0.41 J	2,200	NS	400	1,000	1 U	1 U	1 U	0.5 U
Toluene	1 U	1 U	0.5 U	25	NS	0.5 U	16 J	NS	6	18	1 U	1 U	1 U	0.5 U
trans-1,2-Dichloroethene	0.4 J	1 U	0.5 U	5 U	NS	0.5 U	12 J	NS	5	7.7 J	1 U	1 U	1 U	0.5 U
Trichloroethene	76	64	89	3 J	NS	0.57 J	88	NS	45	55	1 U	1 U	1 U	0.41 J
Vinyl chloride	0.8 J	0.4 J	1 U	10 U	NS	1 U	40 U	NS	0.7 J	10 U	4	1 J	1 J	0.76 J
Xylene, total	3 U	3 U	1.5 U	15 U	NS	1.5 U	13 J	NS	3 U	15 U	3 U	3 U	3 U	1.5 U
Total Metals (UG/L)														
Aluminum	47 B	63.8 J	47.6 J	549	88,200	65,100	4,120	7,730	NS	20,300	177 B	140 J	153 J	100 U
Antimony	8 U	8 U	5 U	8 U	8 U	2.9 J	8 U	8 U	NS	25 U	8 U	8 U	8 U	2.5 J
Arsenic	39.8	25.2	20.2	8 U	27.9	15.4	121	47.9	NS	135	1.2 B	8 U	2.1 J	5 U
Barium	94.8	79.2	102	8.4	174	128	160	28.7	NS	15.3	48.1	48.3	47.2	42.6
Beryllium	0.17 B	0.17 J	0.11 J	0.21 B	2.3 J	1.6 J	4.8 B	5.3	NS	12.2	0.21 B	0.14 J	0.18 J	0.09 J
Cadmium	10 U	10 U	0.5 U	0.81 B	0.84 J	0.5 U	0.21 B	5.2 J	NS	1 J	10 U	10 U	10 U	0.5 U
Calcium	2,570	2,480	2,940	5,760	4,790	6,340	2,820	11,400	NS	12,900	3,680	4,130	4,040	3,740
Chromium	0.9 B	0.62 J	0.69 J	1.2 B	148	114	4.3 B	105	NS	45.9	2 B	1.4 J	1.1 J	0.92 J
Cobalt	5.6 B	5.2 J	6.9 J	24.9 B	28.9 J	20.7 J	89	198	NS	216	2.7 B	2.3 J	2.4 J	2.5 J
Copper	25 U	25 U	10 U	2.1 B	140	96.6	25 U	18.2 J	NS	4.9 J	25 U	25 U	25 U	10 U
Iron	5,120	4,870	4,460	4,230	132,000	94,300	34,300	64,700	NS	69,600	19,600	30,600	20,600	15,400
Lead	5 U	5 U	2.2 J	1.3 B	92.4	66.6	7.1	78.2	NS	41.2	5 U	5 U	1.1 J	2.2 J
Magnesium	3,300	3,130	3,520	1,660	7,780	5,270	5,120	9,750	NS	10,500	2,040	2,210	2,200	2,070
Manganese	116	103	122	174	456	340	242	520	NS	724	369	414	441	408
Mercury	0.2 U	0.2 U	0.1 U	0.05 B	20.3	11.5	0.07 B	0.44	NS	0.09 J	0.2 U	0.2 U	0.2 U	0.1 U
Nickel	1.3 B	1.1 J	1.4 J	22 B	104	67.8	69.7	122	NS	170	0.79 B	40 U	0.35 J	4 U
Potassium	3,120	2,970	3,180	1,330	8,000	6,710	1,480	3,090	NS	4,000	1,340	1,310	1,320	1,350
Selenium	10 U	10 U	7 U	10 U	10 U	12.1	10 U	10 U	NS	3.9 J	10 U	10 U	10 U	5 J
Silver	15 U	15 U	4 U	1.3 B	87	152	15 U	0.98 J	NS	4 U	15 U	15 U	15 U	4 U
Sodium	38,900	34,600	36,100	3,760	66,600	81,900	15,800	1,620,000	NS	1,250,000	16,000	13,700	13,400	14,300
Thallium	15 U	1.6 J	5 U	15 U	3 J	5 U	15 U	15 U	NS	5 U	15 U	15 U	15 U	5 U
Vanadium	25 U	1.2 J	0.42 J	25 U	228	158	105	126	NS	270	25 U	3 J	1.6 J	4 U
Zinc	27.8	16.6 J	23.2 J	177	366	242	189	352	NS	518	5.4 B	13.4 J	2.3 J	3.8 J

Indian Head
CTO-51 165, Site 47
Groundwater Detected Analytical Results
October 2009, February 2010, July 2010

Station ID	IS47MW01			IS47MW03			IS47MW04				IS47MW05			
Sample ID	IS47MW011009	IS47MW010210	IS47MW010710	IS47MW031009	IS47MW030210	IS47MW030710	IS47MW041009	IS47MW040210	IS47MW040210A	IS47MW040710	IS47MW051009	IS47MW050210	IS47MW05P0210	IS47MW050710
Sample Date	10/15/09	2/3/10	7/7/10	10/15/09	2/3/10	7/6/10	10/14/09	2/3/10	2/3/10	7/6/10	10/13/09	2/4/10	2/4/10	7/8/10
Chemical Name														
Dissolved Metals (UG/L)														
Aluminum	300 U	21.3 J	100 U	236 B	57,500	1,050	3,850	6,950	NS	20,300	300 U	300 U	300 U	100 U
Antimony	8 U	8 U	5 U	8 U	1.8 J	5 U	8 U	8 U	NS	25 U	8 U	8 U	8 U	5 U
Arsenic	25.2	14.5	16.2	8 U	18.8	2.2 J	116	33.8	NS	137	8 U	8 U	8 U	2.2 J
Barium	91.7	79	97.9	7.7	117	3.5 J	156	28.4	NS	15.3	46.4	44.7	44.1	42.4
Beryllium	0.16 B	0.13 J	0.11 J	0.17 B	1.5 J	0.5 U	4.6 B	5.3	NS	12.4	0.14 B	5 U	5 U	0.07 J
Cadmium	10 U	10 U	0.5 U	0.86 B	0.53 J	0.5 U	0.16 B	4.8 J	NS	1 J	10 U	10 U	10 U	0.5 U
Calcium	2,470	2,500	2,710	5,940	3,090	756	2,860	11,700	NS	13,300	3,810	4,110	4,130	3,890
Chromium	0.96 B	15 U	0.42 J	0.82 B	94.2	4.1 J	4.1 B	77.9	NS	46.4	1.3 B	0.77 J	0.84 J	0.78 J
Cobalt	5.4 B	5.3 J	6.8 J	26.1 B	17.6 J	4 U	86.7	199	NS	219	2.3 B	2.3 J	2.2 J	2.4 J
Copper	25 U	25 U	10 U	3 B	87.2	3.4 J	25 U	15.9 J	NS	2.3 J	25 U	25 U	25 U	10 U
Iron	4,190	2,880	3,840	3,560	80,000	1,480	33,200	58,600	NS	71,000	13,800	15,000	15,000	15,100
Lead	5 U	5 U	1.5 J	5 U	57.4	3.3 J	2.3 B	46.8	NS	40.9	5 U	5 U	1.3 J	2 J
Magnesium	3,210	3,160	3,280	1,660	4,980	159	4,890	9,970	NS	10,600	2,060	2,190	2,200	2,100
Manganese	115	103	116	181	277	6	233	522	NS	737	379	414	407	407
Mercury	0.2 U	0.2 U	0.1 U	0.2 U	15.1	0.68	0.2 U	0.25	NS	0.04 J	0.2 U	0.2 U	0.2 U	0.1 U
Nickel	1 B	0.93 J	1.4 J	22.7 B	66.2	1.1 J	67.8	123	NS	172	0.4 B	0.32 J	40 U	4 U
Potassium	3,340	2,970	3,060	1,340	5,850	795 J	1,370	3,100	NS	3,990	1,330	1,240	1,450	1,360
Selenium	10 U	10 U	7 U	10 U	10 U	7 U	10 U	10 U	NS	3.8 J	10 U	10 U	10 U	7 U
Silver	15 U	15 U	4 U	15 U	52	2.6 J	15 U	1 J	NS	4 U	15 U	15 U	15 U	4 U
Sodium	37,900	35,800	38,100	3,760	61,900	85,800	15,700	1,780,000	NS	1,220,000	16,200	13,600	13,700	14,400
Thallium	15 U	1.7 J	5 U	15 U	2.6 J	5 U	15 U	15 U	NS	5 U	15 U	15 U	15 U	5 U
Vanadium	25 U	0.84 J	4 U	25 U	150	8.2 J	98.4	54.3	NS	274	25 U	0.54 J	0.49 J	4 U
Zinc	14.2 B	15.2 J	20.6 J	182	226	7.2 J	183	355	NS	522	7.6 B	25 U	1.9 J	1.4 J
Wet Chemistry (MG/L)														
Alkalinity	35	NS	26	5 U	NS	150	5 U	NS	NS	4 U	29	NS	NS	35
Chloride	36	36	45	20	5.1	8.2	87	85	NS	130	22	24	23	24
Ferrous iron	4.2	NS	4.2	3.4	NS	0.4	33	NS	NS	90	13	NS	NS	16
Nitrate	0.05 U	0.05 U	0.025 U	1.2	0.31	0.72	0.05 U	0.023 J	NS	0.025 U	0.05 U	0.05 U	0.05 U	0.025 U
Nitrite	0.05 U	0.05 U	0.025 U	0.05 U	0.017 J	0.069	0.05 U	0.05 U	NS	0.016 J	0.05 U	0.05 U	0.05 U	0.01 J
Sulfate	19	20	29	6.4	23	25	22	3,600	NS	3,500	7.3	6.9	6.8	7.5
Sulfide	1.6	1 U	0.98 J	3.2	3.4	3.5	1 U	1 U	NS	0.75 U	1 U	1.7	1 U	0.75 U

Notes:

Shading indicates detection

B - Analyte not detected above the level reported in blanks

J - Analyte present. Value may or may not be accurate or precise

JB - Analyte present. Value may or may not be accurate or precise. Analyte not detected above the level reported in blanks.

NS - Not sampled

U - The material was analyzed for, but not detected

MG/L - Milligrams per liter

UG/L - Micrograms per liter

Indian Head
CTO-51 165, Site 47
Groundwater Detected Analytical Results
October 2009, February 2010, July 2010

Station ID	IS47MW19			IS47MW20			IS47MW21				IS47MW22			
Sample ID	IS47MW191009	IS47MW190210	IS47MW190710	IS47MW201009	IS47MW200210	IS47MW200710	IS47MW211009	IS47MW210210	IS47MW210210A	IS47MW210710	IS47MW221009	IS47MW220210	IS47MW220710	IS47MW22P0710
Sample Date	10/15/09	2/3/10	7/8/10	10/14/09	2/3/10	7/7/10	10/15/09	2/3/10	2/3/10	7/7/10	10/14/09	2/4/10	7/8/10	7/8/10
Chemical Name														
Volatile Organic Compounds (UG/L)														
1,1,1-Trichloroethane	100 U	NS	5 U	12 J	NS	50 U	23 J	NS	7	6 J	12 J	200 U	100 U	100 U
1,1,2,2-Tetrachloroethane	100 U	NS	5 U	20 U	NS	50 U	100 U	NS	1 U	5 U	50 U	200 U	100 U	100 U
1,1-Dichloroethane	100 U	NS	5 U	20 U	NS	50 U	100 U	NS	1 U	5 U	50 U	200 U	100 U	100 U
1,1-Dichloroethene	100 U	NS	5 U	20 U	NS	50 U	100 U	NS	1 U	5 U	50 U	200 U	100 U	100 U
1,2-Dichloroethane	100 U	NS	5 U	20 U	NS	50 U	100 U	NS	8	15	16 J	200 U	100 U	100 U
1,2-Dichloroethene (total)	200 U	NS	10 U	40 U	NS	100 U	200 U	NS	6	49	220	400 U	200 U	200 U
2-Butanone	500 U	NS	25 U	100 U	NS	250 U	500 U	NS	55	48 J	250 U	1000 U	500 U	500 U
Acetone	500 U	NS	78	100 U	NS	450 J	500 U	NS	610	580	250 U	1000 U	750 J	850 J
Benzene	100 U	NS	5 U	20 U	NS	50 U	100 U	NS	2	5 U	50 U	200 U	100 U	100 U
Bromodichloromethane	100 U	NS	5 U	20 U	NS	50 U	100 U	NS	2	5 U	50 U	200 U	100 U	100 U
Bromomethane	200 U	NS	10 U	40 U	NS	100 U	200 U	NS	2 J	10 U	100 U	120 J	200 U	200 U
Carbon disulfide	1,100	NS	15	240	NS	2,200	2,300	NS	900	340	4,700	3,500	14,000	11,000
Carbon tetrachloride	150,000	NS	1,600	29,000	NS	30,000	93,000	NS	17,000	1,700	69,000	280,000	220,000	170,000
Chloroethane	200 U	NS	10 U	40 U	NS	100 U	200 U	NS	0.7 J	10 U	100 U	400 U	200 U	200 U
Chloroform	37,000	NS	1,200	27,000	NS	61,000	44,000	NS	14,000	16,000	23,000	26,000	30,000	32,000
Chloromethane	200 U	NS	10 U	40 U	NS	100 U	200 U	NS	40	9.1 J	100 U	230 J	100 J	120 J
cis-1,2-Dichloroethene	100 U	NS	5 U	20 U	NS	50 U	100 U	NS	5	45	190	200 U	100 U	100 U
Ethene	10 U	NS	2 U	10 U	NS	2 U	10 U	NS	NS	2 U	2.6 J	NS	2 U	2 U
Ethylbenzene	100 U	NS	5 U	20 U	NS	50 U	47 J	NS	1 U	5 U	50 U	200 U	100 U	100 U
m- and p-Xylene	66 J	NS	10 U	40 U	NS	100 U	160 J	NS	2 U	10 U	100 U	400 U	200 U	200 U
Methane	40	NS	64	3 J	NS	100	52	NS	NS	180	200	NS	84	87
Methylene chloride	500 U	NS	25 U	100 U	NS	240 J	500 U	NS	27	84	250 U	1000 U	500 U	500 U
o-Xylene	100 U	NS	5 U	20 U	NS	50 U	39 J	NS	1 U	5 U	50 U	200 U	100 U	100 U
Tetrachloroethene	100 U	NS	5 U	29	NS	77 J	100 U	NS	33	51	1,300	730	890	700
Toluene	83 J	NS	5 U	46	NS	120	230	NS	8	15	44 J	200 U	84 J	70 J
trans-1,2-Dichloroethene	100 U	NS	5 U	20 U	NS	50 U	100 U	NS	0.6 J	4.3 J	32 J	200 U	100 U	100 U
Trichloroethene	100 U	NS	5 U	20 U	NS	50 U	100 U	NS	6	9.8 J	250	200 U	100 U	100 U
Vinyl chloride	200 U	NS	10 U	40 U	NS	100 U	200 U	NS	2 U	10 U	100 U	400 U	200 U	200 U
Xylene, total	66 J	NS	15 U	60 U	NS	150 U	200 J	NS	3 U	15 U	150 U	600 U	300 U	300 U
Total Metals (UG/L)														
Aluminum	21,600	37,600	282,000	1,860	69,100	22,800	3,680	18,800	NS	2,770	4,540	9,780	26,200	28,600
Antimony	8 U	22.3	5 U	8 U	4.8 J	15.3 J	1.4 B	4.9 J	NS	17.6 J	8 U	8 U	15 U	10 U
Arsenic	30.7	438	224	31.6	200	61.6	25.8	93.7	NS	106	85.2	14.3 J	44.5	53.6
Barium	166	47.7	335	259	94.3	38.5	89.2	58.6	NS	15.2 J	197	70.9	24.4 J	21.9
Beryllium	2.1 B	2.6 J	6.2 J	1.6 B	2.9 J	0.82 J	2.1 B	9.3	NS	0.35 J	5.5	2.1 J	9.8 J	9.9 J
Cadmium	0.91 B	20 U	1 U	1.3 B	0.25 J	2.5 U	1.4 B	4.5 J	NS	2.5 U	0.93 B	5.8 J	5.5 J	5.4 J
Calcium	11,700	9,400	12,300	9,960	4,100	1,000	11,700	69,700	NS	14,900	3,110	51,200	14,000	11,500
Chromium	58.6	2,000	460	4.8 B	441	108	3.3 B	1,080	NS	197	5.5 B	872	202	148
Cobalt	61.7	22.2 J	73	51.9	17.6 J	7.5 J	64.8	783	NS	64.5 J	90.8	356	334	278
Copper	45.8	143	322	55.2	183	93.8 J	1.9 B	308	NS	93.2 J	25 U	277	170	169
Iron	54,800	27,400	332,000	15,000	24,800	18,700	14,100	38,500	NS	9,190	35,400	5,680	44,800	42,500
Lead	33.3	19.2	265	5	29.9	26.7	3.2 B	6.6	NS	20 U	5.5	25 U	36.2	32.8
Magnesium	6,420	3,960	17,600	6,290	5,150	1,710	5,600	60,100	NS	10,600	5,180	31,400	13,700	12,200
Manganese	430	84.5	919	209	65.4	43	194	2,840	NS	499	259	743	933	754
Mercury	2.6	12.1	140	0.03 B	2.5	3.8	0.2 U	34.7	NS	3.7	0.2 U	0.36	0.42	0.3
Nickel	68.3	59.4 J	248	66.1	56	27 J	54.6	431	NS	44.2 J	79.2	283 J	220	193
Potassium	4,600	11,900	15,300	2,460	9,330	4,350 J	1,970	21,300	NS	9,290	1,860	9,290	6,740	5,240
Selenium	10 U	109	27.7	10 U	17.3	35 U	10 U	74.4	NS	123	10 U	43.8 J	24.8 J	12.1 J
Silver	0.82 B	7.8 J	49.8	15 U	3.2 J	20 U	15 U	9.1 J	NS	20 U	15 U	15 U	20 U	4 U
Sodium	9,410	9,420,000	527,000	19,400	2,720,000	1,400,000	15,100	11,000,000	NS	8,600,000	15,700	5,310,000	2,020,000	2,460,000
Thallium	15 U	10.3 J	1.9 J	15 U	4.7 J	25 U	15 U	15 U	NS	25 U	15 U	15 U	25 U	5 U
Vanadium	115	2,160	1,300	25 U	786	169	16.9 B	696	NS	396	81.6	23.9 J	24.4 J	22.7 J
Zinc	161	55.4	582	245	86.2	55.7 J	167	466	NS	120	211	313	661	628

Indian Head
CTO-51 165, Site 47
Groundwater Detected Analytical Results
October 2009, February 2010, July 2010

Station ID	IS47MW19			IS47MW20			IS47MW21				IS47MW22			
Sample ID	IS47MW191009	IS47MW190210	IS47MW190710	IS47MW201009	IS47MW200210	IS47MW200710	IS47MW211009	IS47MW210210	IS47MW210210A	IS47MW210710	IS47MW221009	IS47MW220210	IS47MW220710	IS47MW22P0710
Sample Date	10/15/09	2/3/10	7/8/10	10/14/09	2/3/10	7/7/10	10/15/09	2/3/10	2/3/10	7/7/10	10/14/09	2/4/10	7/8/10	7/8/10
Chemical Name														
Dissolved Metals (UG/L)														
Aluminum	2,290	32,400	223,000	1,890	29,600	4,400	3,560	12,400	NS	1,390 J	4,220	9,320	24,300	23,300
Antimony	8 U	9 J	15 U	8 U	5.3 J	26.5 J	8 U	6.4 J	NS	50 U	8 U	8 U	10 U	10 U
Arsenic	14	373	223	34.4	193	51.4	26.9	57.5	NS	108	79.6	24 J	49.2	44.8
Barium	129	34.2	272	256	23	7 J	86.7	58.4	NS	11.7 J	197	69.4	17.8	17.6
Beryllium	1.3 B	2.1 J	4.6 J	1.8 B	1.2 J	0.28 J	2.1 B	8.6	NS	0.21 J	5.4	2 J	10	9.7 J
Cadmium	0.72 B	20 U	2.5 U	1.3 B	10 U	2.5 U	1.4 B	4.9 J	NS	2.5 U	0.85 B	5.7 J	5.8 J	5.8 J
Calcium	11,400	7,780	9,680	10,500	3,490	855	11,300	82,400	NS	14,800	3,340	50,900	12,400	12,200
Chromium	4.9 B	1,580	385	3.9 B	329	42.5 J	3.6 B	1,110	NS	153	5 B	867	133	162
Cobalt	50.3	16.6 J	56.7 J	54.2	4.4 J	20 U	63.4	936	NS	61.6 J	94	351	297	295
Copper	25 U	109	247	52.2	98.5	30.3 J	1.1 B	240	NS	46.2 J	25 U	268	145	147
Iron	22,800	20,700	257,000	14,800	5,200	1,990	13,600	29,900	NS	4,810	35,000	5,120	41,700	40,500
Lead	3.6 B	11.8	194	5.1	7.4	6.3 J	3.3 B	2.7 J	NS	20 U	5.2	25 U	27	27.8
Magnesium	4,880	2,880	14,000	6,540	1,270	303	5,470	71,300	NS	10,500	5,420	31,600	12,800	12,700
Manganese	352	62.6	664	218	14.5	3.4 J	192	3,310	NS	462	275	745	826	821
Mercury	0.2 U	24.1	78.1	0.2 U	3.1	0.57	0.2 U	16.5	NS	1.6	0.2 U	0.18 J	0.04 J	0.06 J
Nickel	49.8	46.5 J	204	69.2	16.3 J	5.4 J	53.6	505	NS	42 J	78.1	286 J	202	200
Potassium	3,070	10,100	15,800	2,370	3,930	2,210 J	1,900	25,800	NS	9,370	2,000	9,270	5,220	4,760
Selenium	10 U	82.7	64	10 U	15.5	35 U	10 U	91.4	NS	120	10 U	45.1 J	16.7 J	23.4
Silver	15 U	4.3 J	29.2 J	15 U	1 J	20 U	15 U	4.1 J	NS	20 U	15 U	15 U	4 U	4 U
Sodium	10,300	7,420,000	1,400,000	20,500	2,720,000	1,370,000	14,700	11,000,000	NS	8,440,000	16,200	5,100,000	2,630,000	2,540,000
Thallium	15 U	10 J	25 U	15 U	4.9 J	25 U	1.5 B	15 U	NS	25 U	15 U	15 U	5 U	5 U
Vanadium	16.3 B	1,820	1,380	25 U	721	130	16.2 B	544	NS	373	77.4	20.8 J	12.5 J	12.6 J
Zinc	112	44.8 J	454	253	19.6 J	11.6 J	162	507	NS	10.6 J	205	313	632	617
Wet Chemistry (MG/L)														
Alkalinity	5 U	NS	830	5 U	NS	480	5 U	NS	NS	1,600	5 U	NS	12	14
Chloride	65	230	88	79	290	420	80	320	NS	280	94	230	250	240
Ferrous iron	18	NS	2	16	NS	1.4	15	NS	NS	1.6	34	NS	58	52
Nitrate	1.2	4.9	0.125 U	0.39	0.44	0.025 U	0.98	0.6	NS	0.05 U	0.05 U	1.2	0.025 U	0.025 U
Nitrite	0.05 U	0.51	0.15 J	0.05 U	0.19 J	0.043 J	0.05 U	0.028 J	NS	0.23	0.05 U	0.034 J	0.029 J	0.027 J
Sulfate	24	15,000	1,900	21	3,900	2,100	18	21,000	NS	16,000	22	10,000	5,300	5,400
Sulfide	1 U	1 U	0.75 U	1 U	1 U	0.83 J	1 U	1 U	NS	0.75 U	1 U	1 U	0.75 U	0.75 U

Notes:

Shading indicates detection

B - Analyte not detected above the level reported in blanks

J - Analyte present. Value may or may not be accurate or precise

JB - Analyte present. Value may or may not be accurate or precise. Analyte not detected above the level reported in blanks.

NS - Not sampled

U - The material was analyzed for, but not detected

MG/L - Milligrams per liter

UG/L - Micrograms per liter

Indian Head
CTO-51 165, Site 47
Groundwater Detected Analytical Results
October 2009, February 2010, July 2010

Station ID	IS47MW23			IS47MW24			
Sample ID	IS47MW231009	IS47MW230210	IS47MW230710	IS47MW241009	IS47MW24P1009	IS47MW240210	IS47MW240710
Sample Date	10/14/09	2/3/10	7/7/10	10/14/09	10/14/09	2/3/10	7/7/10
Chemical Name							
Volatile Organic Compounds (UG/L)							
1,1,1-Trichloroethane	1 U	3	2.4 J	2	2	5	3 J
1,1,2,2-Tetrachloroethane	1 U	4	2.5 U	1 U	2 U	1 U	2.5 U
1,1-Dichloroethane	0.5 J	0.5 J	2.5 U	0.7 J	0.6 J	1 U	2.5 U
1,1-Dichloroethene	3	1 U	2.5 U	2	2	1 U	2.5 U
1,2-Dichloroethane	0.9 J	8	7.1	2	2 J	2	1.3 U
1,2-Dichloroethene (total)	19	390	510	20	13	3	2.9 J
2-Butanone	5 U	15	11 J	5 U	10 U	24	12 U
Acetone	4 J	160	190	8	11	270	92
Benzene	1 U	1	1.4 J	1 U	2 U	1	2.5 U
Bromodichloromethane	1 U	3	2.5 U	1 U	2 U	0.5 J	2.5 U
Bromomethane	2 U	9	5 U	2 U	4 U	40	11
Carbon disulfide	1 U	1,300	390	12	11	79	370
Carbon tetrachloride	0.3 J	3,200	830	420	460	1,200	1,500
Chloroethane	2 U	2 U	5 U	2 U	4 U	0.9 J	5 U
Chloroform	6	13,000	6,600	5,600	5,800	6,900	6,400
Chloromethane	2 U	24	18	2 U	4 U	65	10 J
cis-1,2-Dichloroethene	19	340	480	19	13	2	2.9 J
Ethene	10 U	NS	2 U	10 U	10 U	NS	1.4 J
Ethylbenzene	1 U	1 U	2.5 U	1 U	2 U	1 U	2.5 U
m- and p-Xylene	2 U	2 U	5 U	2 U	4 U	2 U	5 U
Methane	28	NS	550	16	5 J	NS	23
Methylene chloride	5 U	100	85	18	18	15	21 J
o-Xylene	1 U	1 U	2.5 U	1 U	2 U	1 U	2.5 U
Tetrachloroethene	95	2,700	1,200	42	34	25	16
Toluene	1 U	1	2.8 J	6	7	2	7.3
trans-1,2-Dichloroethene	0.7 J	46	28	0.9 J	0.6 J	0.4 J	2.5 U
Trichloroethene	20	390	420	7	6	2	1.8 J
Vinyl chloride	0.3 J	0.6 J	2.1 J	1 J	1 J	2 U	5 U
Xylene, total	3 U	3 U	7.5 U	3 U	6 U	3 U	7.5 U
Total Metals (UG/L)							
Aluminum	790	28,200	12,200	459	594	25,400	80,500
Antimony	8 U	8 U	50 U	8 U	8 U	8 U	25 U
Arsenic	21.8	44.2	79.1	27.5	29.2	20.2	41.8
Barium	115	20.5	36	145	146	41.8	201
Beryllium	0.85 B	9.4	1.4 J	1.6 B	1.6 B	2.6 J	2.4 J
Cadmium	10 U	15.4	0.76 J	0.41 B	0.31 B	1.4 J	0.5 U
Calcium	2,550	17,400	38,300	3,200	3,020	20,000	14,600
Chromium	3.7 B	306	75.5	1.3 B	1.9 B	300	162
Cobalt	29.6 B	206	83.9 J	45.7	43.5	198	166
Copper	25 U	144	90.4 J	2.7 B	25 U	134	115
Iron	9,330	20,600	16,600	9,880	11,300	18,000	72,800
Lead	2.1 B	14.4	9.4 J	2.6 B	2.4 B	64.2	71.9
Magnesium	1,480	7,970	15,800	2,520	2,460	10,800	11,700
Manganese	85.4	415	673	148	147	599	625
Mercury	0.08 B	0.25	0.62	0.2 U	0.03 B	0.89	12.2
Nickel	20.4 B	123	72.9 J	32.7 B	31.8 B	135	145
Potassium	1,180	3,600	7,750	2,270	2,080	8,670	9,140
Selenium	10 U	6.2 J	51	10 U	10 U	6.2 J	10.6
Silver	15 U	15 U	20 U	15 U	15 U	15 U	5.1 J
Sodium	21,200	2,700,000	3,790,000	19,600	19,900	1,790,000	719,000
Thallium	15 U	15 U	25 U	15 U	15 U	15 U	5 U
Vanadium	7.6 B	591	1,120	25 U	25 U	146	202
Zinc	42	471	143	74	72.6	181	225

Indian Head
CTO-51 165, Site 47
Groundwater Detected Analytical Results
October 2009, February 2010, July 2010

Station ID	IS47MW23			IS47MW24			
Sample ID	IS47MW231009	IS47MW230210	IS47MW230710	IS47MW241009	IS47MW24P1009	IS47MW240210	IS47MW240710
Sample Date	10/14/09	2/3/10	7/7/10	10/14/09	10/14/09	2/3/10	7/7/10
Chemical Name							
Dissolved Metals (UG/L)							
Aluminum	113 B	8,710	8,960	410	412	5,040	857
Antimony	8 U	8 U	50 U	8 U	8 U	8 U	25 U
Arsenic	20	16.3	51.6	26.7	26.8	7.6 J	7 J
Barium	113	11.6	28.2	149	148	15.1	104
Beryllium	0.8 B	2.9 J	0.53 J	1.6 B	1.6 B	1.6 J	0.66 J
Cadmium	10 U	11.2	2.5 U	0.34 B	0.3 B	1.4 J	0.25 J
Calcium	2,920	14,300	37,000	3,250	3,220	22,600	14,700
Chromium	1.7 B	123	34.8 J	1.3 B	1.3 B	216	21.4
Cobalt	29.9 B	199	56.6 J	47.1	45.8	218	155
Copper	25 U	95	48.6 J	25 U	25 U	83.1	21.8 J
Iron	8,010	7,480	6,340	9,940	9,970	803	5,340
Lead	5 U	3.4 J	4.2 J	2.2 B	2.6 B	12.6	3.1 J
Magnesium	1,640	8,100	15,600	2,580	2,570	11,200	7,720
Manganese	91.9	372	563	153	153	621	499
Mercury	0.2 U	0.08 J	0.42	0.2 U	0.2 U	0.69	0.23
Nickel	20.7 B	118	62.6 J	33.5 B	32.3 B	135	102
Potassium	1,240	4,050	7,750	2,210	2,050	7,980	5,650
Selenium	10 U	17.2	29.3 J	10 U	3.6 B	6.4 J	5.6 J
Silver	15 U	15 U	20 U	15 U	15 U	15 U	4 U
Sodium	21,400	3,220,000	3,500,000	20,100	20,100	2,090,000	742,000
Thallium	15 U	15 U	25 U	15 U	15 U	15 U	5 U
Vanadium	25 U	254	812	25 U	25 U	33.2	3.7 J
Zinc	39.8	310	42.1 J	75.9	76.2	154	131
Wet Chemistry (MG/L)							
Alkalinity	5 U	NS	740	5 U	5 U	NS	13
Chloride	37	120	120	45	45	64	64
Ferrous iron	6.3	NS	15	8.7	10	NS	2.4
Nitrate	0.025 J	0.26	0.044 J	0.05 U	0.05 U	0.46	0.025 U
Nitrite	0.05 U	0.021 J	0.039 J	0.05 U	0.05 U	0.042 J	0.025 U
Sulfate	19	5,100	8,100	26	26	2,800	1,700
Sulfide	1 U	1 U	0.75 U	1 U	1 U	1 U	0.75 U

Notes:

Shading indicates detection

B - Analyte not detected above the level reported in blanks

J - Analyte present. Value may or may not be accurate or precise

JB - Analyte present. Value may or may not be accurate or precise. Analyte not detected above the level reported in blanks.

NS - Not sampled

U - The material was analyzed for, but not detected

MG/L - Milligrams per liter

UG/L - Micrograms per liter

Indian Head
CTO-51 165, Site 47
Subsurface Soil Raw Analytical Results
Baseline June 2010

Station ID	IS47SB20												IS47SB21									
Sample ID	IS47SB20-0809	IS47SB20-0817	IS47SB20-0912	IS47SB20-1215	IS47SB20-1517	IS47SB20P-0817	IS47SB20P-1215	IS47SB20A-0609	IS47SB20A-0618	IS47SB20A-0912	IS47SB20A-1215	IS47SB20A-1518	IS47SB21-0809	IS47SB21-0818	IS47SB21-0912	IS47SB21-1215	IS47SB21-1518	IS47SB21A-0710	IS47SB21A-0719	IS47SB21A-1013	IS47SB21A-1316	IS47SB21A-1619
Sample Date	4/29/09	4/29/09	4/29/09	4/29/09	4/29/09	4/29/09	4/29/09	7/7/10	7/7/10	7/7/10	7/7/10	7/7/10	4/29/09	4/29/09	4/29/09	4/29/09	4/29/09	7/7/10	7/7/10	7/7/10	7/7/10	7/7/10
Chemical Name																						
Volatile Organic Compounds (UG/KG)																						
1,1,1-Trichloroethane	3 J	NS	6 J	6 U	7 U	3 J	6 U	3 U	NS	380 U	170 U	170 U	6 U	NS	6 J	6 U	6 U	3 U	NS	3 U	2.8 U	3 U
1,1,2,2-Tetrachloroethane	6 U	NS	6 U	6 U	7 U	6 U	6 U	3 U	NS	380 U	170 U	170 U	6 U	NS	6 U	6 U	6 U	3 U	NS	3 U	2.8 U	3 U
1,1,2-Trichloro-1,2,2-trifluoroethane(Freon-113)	6 U	NS	6 U	6 U	7 U	6 U	6 U	3 U	NS	380 U	170 U	170 U	6 U	NS	6 U	6 U	6 U	3 U	NS	3 U	2.8 U	3 U
1,1,2-Trichloroethane	6 U	NS	6 U	6 U	7 U	6 U	6 U	3 U	NS	380 U	170 U	170 U	6 U	NS	6 U	6 U	6 U	3 U	NS	3 U	2.8 U	3 U
1,1-Dichloroethane	6 U	NS	6 U	6 U	7 U	6 U	6 U	3 U	NS	380 U	170 U	170 U	6 U	NS	6 U	6 U	6 U	3 U	NS	3 U	2.8 U	3 U
1,1-Dichloroethene	6 U	NS	6 U	6 U	7 U	6 U	6 U	3 U	NS	380 U	170 U	170 U	6 U	NS	6 U	6 U	6 U	3 U	NS	3 U	2.8 U	3 U
1,2,4-Trichlorobenzene	6 U	NS	6 U	6 U	7 U	6 U	6 U	3 U	NS	380 U	170 U	170 U	6 U	NS	6 U	6 U	6 U	3 U	NS	3 U	2.8 U	3 U
1,2-Dibromo-3-chloropropane	6 U	NS	6 U	6 U	7 U	6 U	6 U	3 U	NS	380 U	170 U	170 U	6 U	NS	6 U	6 U	6 U	3 U	NS	3 U	2.8 U	3 U
1,2-Dibromoethane	6 U	NS	6 U	6 U	7 U	6 U	6 U	3 U	NS	380 U	170 U	170 U	6 U	NS	6 U	6 U	6 U	3 U	NS	3 U	2.8 U	3 U
1,2-Dichlorobenzene	6 U	NS	6 U	6 U	7 U	6 U	6 U	3 U	NS	380 U	170 U	170 U	6 U	NS	6 U	6 U	6 U	3 U	NS	3 U	2.8 U	3 U
1,2-Dichloroethane	6 U	NS	6 U	6 U	14	9	6 U	3 U	NS	380 U	170 U	170 U	6 U	NS	6 U	6 U	2 J	3 U	NS	3 U	2.8 U	3 U
1,2-Dichloroethene (total)	12 U	NS	4 J	12 U	6 J	12 U	12 U	6 U	NS	750 U	340 U	340 U	12 U	NS	8 J	12 U	13 U	6 U	NS	6 U	5.5 U	1.4 J
1,2-Dichloropropane	6 U	NS	6 U	6 U	7 U	6 U	6 U	3 U	NS	380 U	170 U	170 U	6 U	NS	6 U	6 U	6 U	3 U	NS	3 U	2.8 U	3 U
1,3-Dichlorobenzene	6 U	NS	6 U	6 U	7 U	6 U	6 U	3 U	NS	380 U	170 U	170 U	6 U	NS	6 U	6 U	6 U	3 U	NS	3 U	2.8 U	3 U
1,4-Dichlorobenzene	6 U	NS	6 U	6 U	7 U	6 U	6 U	3 U	NS	380 U	170 U	170 U	6 U	NS	6 U	6 U	6 U	3 U	NS	3 U	2.8 U	3 U
2-Butanone	30 U	NS	31 U	30 U	53	26 J	30 U	15 U	NS	1900 U	850 U	860 U	30 U	NS	31 U	30 U	15 J	15 U	NS	15 U	8.1 J	15 U
2-Hexanone	30 U	NS	31 U	30 U	35 U	31 U	30 U	15 U	NS	1900 U	850 U	860 U	30 U	NS	31 U	30 U	32 U	15 U	NS	15 U	14 U	15 U
4-Methyl-2-pentanone	30 U	NS	31 U	30 U	35 U	31 U	30 U	15 U	NS	1900 U	850 U	860 U	30 U	NS	31 U	30 U	32 U	15 U	NS	15 U	14 U	15 U
Acetone	45	NS	37	14 J	160	310	21 J	23 J	NS	1900 U	850 U	860 U	25 J	NS	33	28 J	72	16 J	NS	38	72	38
Benzene	6 U	NS	6 U	6 U	7 U	6 U	6 U	3 U	NS	380 U	170 U	170 U	6 U	NS	6 U	6 U	6 U	3 U	NS	3 U	2.8 U	3 U
Bromodichloromethane	6 U	NS	6 U	6 U	7 U	6 U	6 U	3 U	NS	380 U	170 U	170 U	6 U	NS	6 U	6 U	6 U	3 U	NS	3 U	2.8 U	3 U
Bromoform	6 U	NS	6 U	6 U	7 U	6 U	6 U	3 U	NS	380 U	170 U	170 U	6 U	NS	6 U	6 U	6 U	3 U	NS	3 U	2.8 U	3 U
Bromomethane	6 U	NS	6 U	6 U	7 U	6 U	6 U	3 U	NS	170 J	170 U	78 J	6 U	NS	6 U	6 U	6 U	3 U	NS	3 U	2.8 U	3 U
Carbon disulfide	140	NS	280 J	6 U	7 U	200	4 J	1.2 J	NS	380 U	170 U	170 U	6 U	NS	120	64	6 U	2.9 J	NS	7.6	20	11
Carbon tetrachloride	19,000	NS	100,000	9	6 J	30,000	5 J	43	NS	25,000	12,000	2,700	6 U	NS	23,000	930	6 U	180	NS	98	96	43
Chlorobenzene	6 U	NS	6 U	6 U	7 U	6 U	6 U	3 U	NS	380 U	170 U	170 U	6 U	NS	6 U	6 U	6 U	3 U	NS	3 U	2.8 U	3 U
Chloroethane	6 U	NS	6 U	6 U	7 U	6 U	6 U	3 U	NS	380 U	170 U	170 U	6 U	NS	6 U	6 U	6 U	3 U	NS	3 U	2.8 U	3 U
Chloroform	2,800	NS	3,900	6 J	5 J	3,200	3 J	40	NS	3,800	11,000	6,100	6 U	NS	1,400 J	2,100	6 J	180	NS	850	900	490
Chloromethane	6 U	NS	9	6 U	7 U	6 U	6 U	3 U	NS	380 U	170 U	170 U	6 U	NS	6 U	6 U	6 U	3 U	NS	3 U	2.8 U	3 U
cis-1,2-Dichloroethene	6 U	NS	4 J	6 U	6 J	6 U	6 U	3 U	NS	380 U	170 U	170 U	6 U	NS	8	6 U	6 U	3 U	NS	3 U	2.8 U	1.4 J
cis-1,3-Dichloropropene	6 U	NS	6 U	6 U	7 U	6 U	6 U	3 U	NS	380 U	170 U	170 U	6 U	NS	6 U	6 U	6 U	3 U	NS	3 U	2.8 U	3 U
Cyclohexane	6 U	NS	6 U	6 U	7 U	6 U	6 U	3 U	NS	380 U	170 U	170 U	6 U	NS	6 U	6 U	6 U	3 U	NS	3 U	2.8 U	3 U
Dibromochloromethane	6 U	NS	6 U	6 U	7 U	6 U	6 U	3 U	NS	380 U	170 U	170 U	6 U	NS	6 U	6 U	6 U	3 U	NS	3 U	2.8 U	3 U
Dichlorodifluoromethane (Freon-12)	6 U	NS	6 U	6 U	7 U	6 U	6 U	3 U	NS	380 U	170 U	170 U	6 U	NS	6 U	6 U	6 U	3 U	NS	3 U	2.8 U	3 U
Ethylbenzene	6 U	NS	6 U	6 U	7 U	6 U	6 U	3 U	NS	380 U	170 U	170 U	6 U	NS	6 U	6 U	6 U	3 U	NS	3 U	2.8 U	3 U
Isopropylbenzene	6 U	NS	6 U	6 U	7 U	6 U	6 U	3 U	NS	380 U	170 U	170 U	6 U	NS	6 U	6 U	6 U	3 U	NS	3 U	2.8 U	3 U
m- and p-Xylene	12 U	NS	12 U	12 U	14 U	12 U	12 U	6 U	NS	750 U	340 U	340 U	12 U	NS	12 U	12 U	13 U	6 U	NS	6 U	5.5 U	6 U
Methyl acetate	6 U	NS	6 U	6 U	7 U	6 U	6 U	3.6 U	NS	450 U	200 U	210 U	6 U	NS	6 U	6 U	6 U	3.6 U	NS	3.6 U	3.3 U	3.6 U
Methylcyclohexane	2 J	NS	3 J	6 U	7 U	6 U	6 U	3 U	NS	380 U	170 U	170 U	6 U	NS	6 U	6 U	6 U	3 U	NS	3 U	2.8 U	3 U
Methylene chloride	13 JB	NS	14 JB	11 JB	15 JB	110 B	11 JB	15 U	NS	1900 U	850 U	860 U	9 JB	NS	12 JB	16 JB	12 JB	15 U	NS	15 U	14 U	15 U
Methyl-tert-butyl ether (MTBE)	6 U	NS	6 U	6 U	7 U	6 U	6 U	3 U	NS	380 U	170 U	170 U	6 U	NS	6 U	6 U	6 U	3 U	NS	3 U	2.8 U	3 U
o-Xylene	6 U	NS	6 U	6 U	7 U	6 U	6 U	3 U	NS	380 U	170 U	170 U	6 U	NS	6 U	6 U	6 U	3 U	NS	3 U	2.8 U	3 U
Styrene	6 U	NS	6 U	6 U	7 U	6 U	6 U	3 U	NS	380 U	170 U	170 U	6 U	NS	6 U	6 U	6 U	3 U	NS	3 U	2.8 U	3 U
Tetrachloroethene	50	NS	160	6 U	7 U	64	6 U	3 U	NS	380 U	200 J	120 J	6 U	NS	31	3 J	6 U	3.2 J	NS	19	20	5.1 J
Toluene	27	NS	110	6 U	7 U	23	6 U	3 U	NS	380 U	170 U	170 U	6 U	NS	69	6 U	6 U	3 U	NS	3 J	1.8 J	3 U
trans-1,2-Dichloroethene	6 U	NS	6 U	6 U	7 U	6 U	6 U	3 U	NS	380 U	170 U	170 U	6 U	NS	6 U	6 U	6 U	3 U	NS	3 U	2.8 U	3 U
trans-1,3-Dichloropropene	6 U	NS	6 U	6 U	7 U	6 U	6 U	3 U	NS	380 U	170 U	170 U	6 U	NS	6 U	6 U	6 U	3 U	NS	3 U	2.8 U	3 U
Trichloroethene	4 J	NS	7	4 J	40	6 U	7	3 U	NS	380 U	170 U	170 U	6 U	NS	39	4 J	9	3 U	NS	3 U	2.8 U	0.79 J
Trichlorofluoromethane(Freon-11)	6 U	NS	6 U	6 U	7 U	6 U	6 U	3 U	NS	380 U	170 U	170 U	6 U	NS	6 U	6 U	6 U	3 U	NS	3 U	2.8 U	3 U
Vinyl chloride	6 U	NS	6 U	6 U	7 U	6 U	6 U	3 U	NS	380 U	170 U	170 U	6 U	NS	6 U	6 U	6 U	3 U	NS	3 U	2.8 U	3 U
Xylene, total	18 U	NS	18 U	18 U	21 U	18 U	18 U	9 U	NS	1100 U	510 U	520 U	18 U	NS	19 U	18 U	19 U	9 U	NS	9 U	8.2 U	9 U
Total Metals (MG/KG)																						
Aluminum	NS	6,700	NS	NS	NS	NS	NS	NS	4,360	NS	NS	NS	NS	3,690	NS	NS	NS	NS	3,290	NS	NS	NS
Antimony	NS	0.64 U	NS	NS	NS	NS	NS	NS	0.38 U	NS	NS	NS	NS	0.12 B	NS	NS	NS	NS	0.34 U	NS	NS	NS
Arsenic	NS	2.4	NS	NS	NS	NS	NS	NS	1.9	NS	NS	NS	NS	1.7	NS	NS	NS	NS	1.4	NS	NS	NS
Barium	NS	37.3	NS	NS	NS	NS	NS	NS	19.3	NS	NS	NS	NS	20.4	NS	NS	NS	NS	17.1	NS	NS	NS
Beryllium	NS	0.49	NS	NS	NS	NS	NS	NS	0.26 J	NS	NS	NS	NS	0.3 B	NS	NS	NS	NS	0.23 J	NS	NS	NS
Cadmium	NS	0.08 B	NS	NS	NS	NS	NS	NS	0.07 J	NS	NS	NS	NS	0.07 B	NS	NS	NS	NS	0.06 J	NS	NS	NS
Calcium	NS	300	NS	NS	NS	NS	NS	NS	271	NS	NS	NS	NS	124	NS	NS	NS	NS	99.8	NS	NS	NS
Chromium	NS	15.6	NS	NS	NS	NS	NS	NS	11.8	NS	NS	NS	NS	11.1	NS	NS	NS	NS	11.2	NS	NS	NS
Cobalt	NS	5.9	NS	NS	NS	NS	NS	NS	4.5	NS	NS	NS	NS	4.3	NS	NS	NS	NS	3.8	NS	NS	NS
Copper	NS	10.5	NS	NS	NS	NS	NS	NS	5.6	NS	NS	NS	NS	7.8	NS	NS	NS	NS	5	NS	NS	NS
Iron	NS	5,950	NS	NS	NS	NS	NS	NS	4,340	NS	NS	NS	NS	3,660	NS	NS	NS	NS	2,920	NS	NS	NS
Lead	NS	7.1	NS	NS	NS	NS	NS	NS	5.8	NS	NS	NS	NS	5.9	NS	NS	NS	NS	4.9	NS	NS	NS
MAGNESIUM	NS	1,220	NS	NS	NS	NS	NS	NS	594	NS	NS	NS	NS	687	NS	NS	NS	NS	533	NS	NS	NS
Manganese	NS	48.1	NS	NS	NS	NS	NS	NS	25.4	NS	NS	NS	NS	23.9	NS	NS	NS	NS	17.2	NS	NS	NS
Mercury	NS	0.08	NS	NS	NS	NS	NS	NS	0.21	NS	NS	NS	NS	0.09	NS	NS	NS	NS	0.02 J	NS	NS	NS
Nickel	NS	7.2	NS	NS	NS	NS	NS	NS	5.3	NS	NS	NS	NS	4.8	NS	NS	NS	NS	4.3	NS	NS	NS
Potassium	NS	722	NS	NS	NS	NS	NS	NS	602	NS	NS	NS	NS	635	NS	NS	NS	NS	520	NS	NS	NS
Selenium	NS	0.32 B	NS	NS	NS	NS	NS	NS	0.54 U	NS	NS	NS	NS	1 U	NS	NS	NS	NS	0.48 U	NS	NS	NS
Silver	NS	0.09 B	NS	NS	NS	NS	NS	NS	0.41 J	NS	NS	NS	NS	0.1 B	NS	NS	NS	NS	0.12 J	NS	NS	NS
Sodium	NS	35.4 B	NS	NS	NS	NS	NS	NS	765	NS	NS	NS	NS	23.8 B	NS	NS	NS	NS	744	NS	NS	NS
Thallium	NS	0.1 B	NS	NS	NS	NS	NS	NS	0.38 U	NS	NS	NS	NS	1.5 U	NS	NS	NS	NS	0.34 U	NS	NS	NS
Vanadium	NS	22.8	NS	NS	NS	NS	NS	NS	17.5	NS	NS	NS	NS	16.7	NS	NS	NS	NS	16	NS	NS	NS
Zinc	NS	19.9	NS	NS	NS	NS	NS	NS	12.1	NS	NS	NS	NS	15.9	NS	NS	NS	NS	11.5	NS	NS	NS
Wet Chemistry (UG/G)																						
Total organic carbon (TOC)	NS	2,700	NS	NS	NS	NS	NS	NS	1,000	NS	NS	NS	NS	2,000	NS	NS	NS	NS	750	NS	NS	NS

Notes:

B - Analyte not detected above the level reported in blanks
J - Analyte present. Value may or may not be accurate or precise
JB - NO MATCHING QUALIFIER DEFINITION FOUND IN LOOKUP LIST
NS - Not sampled
U - The material was analyzed for, but not detected
MG/KG - Milligrams per kilogram
UG/G - Micrograms per gram
UG/KG - Micrograms per kilogram

Indian Head
CTO-51 165, Site 47
Subsurface Soil Raw Analytical Results
Baseline June 2010

Station ID	IS47SB22										IS47SB23A											
Sample ID	IS47SB22-0809	IS47SB22-0818	IS47SB22-0912	IS47SB22-1215	IS47SB22-1518	IS47SB22A-0710	IS47SB22A-0719	IS47SB22A-1013	IS47SB22A-1316	IS47SB22A-1619	IS47SB23-0609	IS47SB23-0617	IS47SB23-0912	IS47SB23-1215	IS47SB23-1517	IS47SB23A-0508	IS47SB23A-0517	IS47SB23A-0811	IS47SB23A-1114	IS47SB23A-1417	IS47SB23AP-0517	IS47SB23AP-0811
Sample Date	4/29/09	4/29/09	4/29/09	4/29/09	4/29/09	7/7/10	7/7/10	7/7/10	7/7/10	7/7/10	4/16/09	4/16/09	4/16/09	4/16/09	4/16/09	7/7/10	7/7/10	7/7/10	7/7/10	7/7/10	7/7/10	7/7/10
Chemical Name																						
Volatile Organic Compounds (UG/KG)																						
1,1,1-Trichloroethane	6 U	NS	13	6 U	6 U	3 U	NS	400 U	2.8 U	3 U	6 U	NS	2 J	6 U	10 U	3 U	NS	6.6	170 U	200 U	NS	2.1 J
1,1,2,2-Tetrachloroethane	6 U	NS	5 J	6 U	6 U	3 U	NS	400 U	2.8 U	3 U	6 U	NS	2 J	6 U	10 U	3 U	NS	1.7 J	170 U	200 U	NS	3 U
1,1,2-Trichloro-1,2,2-trifluoroethane(Freon-113)	6 U	NS	6 U	6 U	6 U	3 U	NS	400 U	2.8 U	3 U	6 U	NS	6 U	6 U	10 U	3 U	NS	3 U	170 U	200 U	NS	3 U
1,1,2-Trichloroethane	6 U	NS	6 U	6 U	6 U	3 U	NS	400 U	2.8 U	3 U	6 U	NS	6 U	6 U	10 U	3 U	NS	3 U	170 U	200 U	NS	3 U
1,1-Dichloroethane	6 U	NS	6 U	6 U	6 U	3 U	NS	400 U	2.8 U	3 U	6 U	NS	6 U	6 U	10 U	3 U	NS	3 U	170 U	200 U	NS	3 U
1,1-Dichloroethene	6 U	NS	6 U	6 U	6 U	3 U	NS	400 U	2.8 U	3 U	6 U	NS	6 U	6 U	10 U	3 U	NS	3 U	170 U	200 U	NS	3 U
1,2,4-Trichlorobenzene	6 U	NS	6 U	6 U	6 U	3 U	NS	400 U	2.8 U	3 U	6 U	NS	6 U	6 U	10 U	3 U	NS	3 U	170 U	200 U	NS	3 U
1,2-Dibromo-3-chloropropane	6 U	NS	6 U	6 U	6 U	3 U	NS	400 U	2.8 U	3 U	6 U	NS	6 U	6 U	10 U	3 U	NS	3 U	170 U	200 U	NS	3 U
1,2-Dibromoethane	6 U	NS	6 U	6 U	6 U	3 U	NS	400 U	2.8 U	3 U	6 U	NS	6 U	6 U	10 U	3 U	NS	3 U	170 U	200 U	NS	3 U
1,2-Dichlorobenzene	6 U	NS	6 U	6 U	6 U	3 U	NS	400 U	2.8 U	3 U	6 U	NS	6 U	6 U	10 U	3 U	NS	3 U	170 U	200 U	NS	3 U
1,2-Dichloroethane	6 U	NS	4 J	6 U	5 J	3 U	NS	400 U	2.8 U	3 U	6 U	NS	4 J	6 U	74	3 U	NS	2.5 J	170 U	200 U	NS	3 U
1,2-Dichloroethene (total)	12 U	NS	14	12 U	13 U	6 U	NS	800 U	5.5 U	1.4 J	11 U	NS	22	17	19 U	6 U	NS	4.3 J	340 U	400 U	NS	2.4 J
1,2-Dichloropropane	6 U	NS	6 U	6 U	6 U	3 U	NS	400 U	2.8 U	3 U	6 U	NS	6 U	6 U	10 U	3 U	NS	3 U	170 U	200 U	NS	3 U
1,3-Dichlorobenzene	6 U	NS	6 U	6 U	6 U	3 U	NS	400 U	2.8 U	3 U	6 U	NS	6 U	6 U	10 U	3 U	NS	3 U	170 U	200 U	NS	3 U
1,4-Dichlorobenzene	6 U	NS	6 U	6 U	6 U	3 U	NS	400 U	2.8 U	3 U	6 U	NS	6 U	6 U	10 U	3 U	NS	3 U	170 U	200 U	NS	3 U
2-Butanone	30 U	NS	31 U	29 U	32 U	15 U	NS	2000 U	14 U	15 U	28 U	NS	30 U	29 U	380	15 U	NS	15 U	840 U	1000 U	NS	15 U
2-Hexanone	30 U	NS	31 U	29 U	32 U	15 U	NS	2000 U	14 U	15 U	28 U	NS	30 U	29 U	48 U	15 U	NS	15 U	840 U	1000 U	NS	15 U
4-Methyl-2-pentanone	30 U	NS	31 U	29 U	32 U	15 U	NS	2000 U	14 U	15 U	28 U	NS	30 U	29 U	48 U	15 U	NS	15 U	840 U	1000 U	NS	15 U
Acetone	33	NS	86	29 U	35	35	NS	2000 U	27 J	45	16 J	NS	24 J	22 J	1,600	48	NS	45	840 U	1000 U	NS	30 J
Benzene	6 U	NS	6 U	6 U	6 U	3 U	NS	400 U	2.8 U	3 U	6 U	NS	6 U	6 U	10 U	3 U	NS	3 U	170 U	200 U	NS	3 U
Bromodichloromethane	6 U	NS	6 U	6 U	6 U	3 U	NS	400 U	2.8 U	3 U	6 U	NS	6 U	6 U	10 U	3 U	NS	2 J	170 U	200 U	NS	3 U
Bromoform	6 U	NS	6 U	6 U	6 U	3 U	NS	400 U	2.8 U	3 U	6 U	NS	6 U	6 U	10 U	3 U	NS	3 U	170 U	200 U	NS	3 U
Bromomethane	6 U	NS	6 U	6 U	6 U	3 U	NS	400 U	2.8 U	3 U	6 U	NS	6 U	6 U	10 U	3 U	NS	3 U	170 U	200 U	NS	3 U
Carbon disulfide	6 U	NS	260 J	200	6 U	1.8 J	NS	300 J	24	12	6 U	NS	340 J	2 J	4 J	1.6 J	NS	67 J	170 U	170 J	NS	220
Carbon tetrachloride	7	NS	58,000	2,800	4 J	29	NS	17,000	100	31	73	NS	4,200 J	6 U	21	8	NS	1,500	9,000	810	NS	2,800
Chlorobenzene	6 U	NS	6 U	6 U	6 U	3 U	NS	400 U	2.8 U	3 U	6 U	NS	6 U	6 U	10 U	3 U	NS	3 U	170 U	200 U	NS	3 U
Chloroethane	6 U	NS	6 U	6 U	6 U	3 U	NS	400 U	2.8 U	3 U	6 U	NS	6 U	6 U	10 U	3 U	NS	3 U	170 U	200 U	NS	3 U
Chloroform	6 U	NS	8,100	3,700	5 J	71	NS	12,000	710	240	56	NS	3,900 J	14	36	33	NS	1,200	2,600	7,200	NS	2,700
Chloromethane	6 U	NS	6 U	6 U	6 U	3 U	NS	400 U	2.8 U	3 U	6 U	NS	6 U	6 U	10 U	2.6 J	NS	40	170 U	200 U	NS	12
cis-1,2-Dichloroethene	6 U	NS	14	6 U	6 U	3 U	NS	400 U	2.8 U	1.4 J	6 U	NS	22	17	10 U	3 U	NS	4.3 J	170 U	200 U	NS	2.4 J
cis-1,3-Dichloropropene	6 U	NS	6 U	6 U	6 U	3 U	NS	400 U	2.8 U	3 U	6 U	NS	6 U	6 U	10 U	3 U	NS	3 U	170 U	200 U	NS	3 U
Cyclohexane	6 U	NS	6 U	6 U	6 U	3 U	NS	400 U	2.8 U	3 U	6 U	NS	6 U	6 U	10 U	3 U	NS	3 U	170 U	200 U	NS	3 U
Dibromochloromethane	6 U	NS	6 U	6 U	6 U	3 U	NS	400 U	2.8 U	3 U	6 U	NS	6 U	6 U	10 U	3 U	NS	3 U	170 U	200 U	NS	3 U
Dichlorodifluoromethane (Freon-12)	6 U	NS	6 U	6 U	6 U	3 U	NS	400 U	2.8 U	3 U	6 U	NS	6 U	6 U	10 U	3 U	NS	3 U	170 U	200 U	NS	3 U
Ethylbenzene	6 U	NS	6 U	6 U	6 U	3 U	NS	400 U	2.8 U	3 U	6 U	NS	6 U	6 U	10 U	3 U	NS	3 U	170 U	200 U	NS	3 U
Isopropylbenzene	6 U	NS	6 U	6 U	6 U	3 U	NS	400 U	2.8 U	3 U	6 U	NS	6 U	6 U	10 U	3 U	NS	3 U	170 U	200 U	NS	3 U
m- and p-Xylene	12 U	NS	12 U	12 U	13 U	6 U	NS	800 U	5.5 U	6 U	11 U	NS	12 U	12 U	19 U	6 U	NS	6 U	340 U	400 U	NS	6 U
Methyl acetate	6 U	NS	6 U	6 U	6 U	3.6 U	NS	480 U	3.3 U	3.6 U	6 U	NS	6 U	6 U	10 U	3.6 U	NS	3.6 U	200 U	240 U	NS	3.6 U
Methylcyclohexane	6 U	NS	6 U	6 U	6 U	3 U	NS	400 U	2.8 U	3 U	6 U	NS	6 U	6 U	10 U	3 U	NS	3 U	170 U	200 U	NS	3 U
Methylene chloride	11 JB	NS	20 JB	16 JB	12 JB	15 U	NS	2000 U	14 U	15 U	28 U	NS	10 J	4 JB	5 J	15 U	NS	15 U	840 U	1000 U	NS	15 U
Methyl-tert-butyl ether (MTBE)	6 U	NS	6 U	6 U	6 U	3 U	NS	400 U	2.8 U	3 U	6 U	NS	6 U	6 U	10 U	3 U	NS	3 U	170 U	200 U	NS	3 U
o-Xylene	6 U	NS	6 U	6 U	6 U	3 U	NS	400 U	2.8 U	3 U	6 U	NS	6 U	6 U	10 U	3 U	NS	3 U	170 U	200 U	NS	3 U
Styrene	6 U	NS	6 U	6 U	6 U	3 U	NS	400 U	2.8 U	3 U	6 U	NS	6 U	6 U	10 U	3 U	NS	3 U	170 U	200 U	NS	3 U
Tetrachloroethene	6 U	NS	160	4 J	6 U	3 U	NS	400 U	6.2	3.9 J	5 J	NS	790 J	17	5 J	3 U	NS	89 J	150 J	260 J	NS	210
Toluene	6 U	NS	280 J	6 U	6 U	3 U	NS	400 U	2.8 U	3 U	6 U	NS	19	6 U	10 U	3 U	NS	55	170 U	200 U	NS	15
trans-1,2-Dichloroethene	6 U	NS	6 U	6 U	6 U	3 U	NS	400 U	2.8 U	3 U	6 U	NS	6 U	6 U	10 U	3 U	NS	3 U	170 U	200 U	NS	3 U
trans-1,3-Dichloropropene	6 U	NS	6 U	6 U	6 U	3 U	NS	400 U	2.8 U	3 U	6 U	NS	6 U	6 U	10 U	3 U	NS	3 U	170 U	200 U	NS	3 U
Trichloroethene	2 J	NS	51	3 J	6 J	3 U	NS	400 U	2.8 U	3 U	6 U	NS	24	5 J	10 U	3 U	NS	5.1 J	170 U	200 U	NS	1.6 J
Trichlorofluoromethane(Freon-11)	6 U	NS	6 U	6 U	6 U	3 U	NS	400 U	2.8 U	3 U	6 U	NS	6 U	6 U	10 U	3 U	NS	3 U	170 U	200 U	NS	3 U
Vinyl chloride	6 U	NS	6 U	6 U	6 U	3 U	NS	400 U	2.8 U	3 U	6 U	NS	6 U	6 U	10 U	3 U	NS	3 U	170 U	200 U	NS	3 U
Xylene, total	18 U	NS	19 U	18 U	19 U	9 U	NS	1200 U	8.2 U	9 U	17 U	NS	18 U	17 U	29 U	9 U	NS	9 U	500 U	600 U	NS	9 U
Total Metals (MG/KG)																						
Aluminum	NS	4,280	NS	NS	NS	NS	3,530	NS	NS	NS	NS	6,050	NS	NS	NS	NS	3,210	NS	NS	NS	3,960	NS
Antimony	NS	0.1 B	NS	NS	NS	NS	0.37 U	NS	NS	NS	NS	0.26 B	NS	NS	NS	NS	0.12 J	NS	NS	NS	0.12 J	NS
Arsenic	NS	1.5	NS	NS	NS	NS	1.3	NS	NS	NS	NS	2	NS	NS	NS	NS	1.5	NS	NS	NS	1.4	NS
Barium	NS	23.4	NS	NS	NS	NS	16.5	NS	NS	NS	NS	36.6	NS	NS	NS	NS	19.1	NS	NS	NS	22.2	NS
Beryllium	NS	0.31 B	NS	NS	NS	NS	0.25 J	NS	NS	NS	NS	0.4 B	NS	NS	NS	NS	0.24 J	NS	NS	NS	0.33 J	NS
Cadmium	NS	0.04 B	NS	NS	NS	NS	0.07 J	NS	NS	NS	NS	0.02 B	NS	NS	NS	NS	0.02 J	NS	NS	NS	0.03 J	NS
Calcium	NS	141	NS	NS	NS	NS	103	NS	NS	NS	NS	232	NS	NS	NS	NS	84.1	NS	NS	NS	105	NS
Chromium	NS	12	NS	NS	NS	NS	10.3	NS	NS	NS	NS	14.3	NS	NS	NS	NS	11.1	NS	NS	NS	11.9	NS
Cobalt	NS	5	NS	NS	NS	NS	3.9	NS	NS	NS	NS	7.5	NS	NS	NS	NS	3.3	NS	NS	NS	5.2	NS
Copper	NS	7.3	NS	NS	NS	NS	5	NS	NS	NS	NS	17.6	NS	NS	NS	NS	5.5	NS	NS	NS	5.4	NS
Iron	NS	3,890	NS	NS	NS	NS	2,870	NS	NS	NS	NS	5,290	NS	NS	NS	NS	2,740	NS	NS	NS	2,940	NS
Lead	NS	5.9	NS	NS	NS	NS	5.1	NS	NS	NS	NS	7.5	NS	NS	NS	NS	5.4	NS	NS	NS	5.6	NS
MAGNESIUM	NS	661	NS	NS	NS	NS	507	NS	NS	NS	NS	872	NS	NS	NS	NS	497	NS	NS	NS	570	NS
Manganese	NS	23.1	NS	NS	NS	NS	16.2	NS	NS	NS	NS	45	NS	NS	NS	NS	16.2	NS	NS	NS	17.7	NS
Mercury	NS	0.08	NS	NS	NS	NS	0.2	NS	NS	NS	NS	0.03 B	NS	NS	NS	NS	0.02 J	NS	NS	NS	0.02 J	NS
Nickel	NS	5	NS	NS	NS	NS	4.3	NS	NS	NS	NS	6.5	NS	NS	NS	NS	3.6	NS	NS	NS	4.4	NS
Potassium	NS	671	NS	NS	NS	NS	582	NS	NS	NS	NS	875	NS	NS	NS	NS	515	NS	NS	NS	702	NS
Selenium	NS	0.86 U	NS	NS	NS	NS	0.52 U	NS	NS	NS	NS	1.2 U	NS	NS	NS	NS	0.43 U	NS	NS	NS	0.52 U	NS
Silver	NS	0.15 B	NS	NS	NS	NS	0.38 J	NS	NS	NS	NS	0.19 B	NS	NS	NS	NS	0.09 J	NS	NS	NS	0.1 J	NS
Sodium	NS	23.6 B	NS	NS	NS	NS	667	NS	NS	NS	NS	35.2 B	NS	NS	NS	NS	653	NS	NS	NS	570	NS
Thallium	NS	0.26 B	NS	NS	NS	NS	0.37 U	NS	NS	NS	NS	0.31 B	NS	NS	NS	NS	0.31 U	NS	NS	NS	0.37 U	NS
Vanadium	NS	18	NS	NS	NS	NS	17	NS	NS	NS	NS	24.2	NS	NS	NS	NS	15	NS	NS	NS	16.5	NS
Zinc	NS	12.5	NS	NS	NS	NS	11.1	NS	NS	NS	NS	18.6	NS	NS	NS	NS	8.4	NS	NS	NS	11.8	NS
Wet Chemistry (UG/G)																						
Total organic carbon (TOC)	NS	4,300	NS	NS	NS	NS	350 J	NS	NS	NS	NS	25,000	NS	NS	NS	NS	780	NS	NS	NS	590	NS

Notes:

B - Analyte not detected above the level reported in blanks
J - Analyte present. Value may or may not be accurate or precise
JB - NO MATCHING QUALIFIER DEFINITION FOUND IN LOOKUP LIST
NS - Not sampled
U - The material was analyzed for, but not detected
MG/KG - Milligrams per kilogram
UG/G - Micrograms per gram
UG/KG - Micrograms per kilogram

Indian Head
CTO-51 165, Site 47
Subsurface Soil Raw Analytical Results
Baseline June 2010

Station ID	IS47SB24											
Sample ID	IS47SB24-0609	IS47SB24-0616	IS47SB24-0912	IS47SB24-1215	IS47SB24-1516	IS47SB24P-0609	IS47SB24P-0616	IS47SB24A-0508	IS47SB24A-0517	IS47SB24A-0811	IS47SB24A-1114	IS47SB24A-1417
Sample Date	4/16/09	4/16/09	4/16/09	4/16/09	4/16/09	4/16/09	4/16/09	7/7/10	7/7/10	7/7/10	7/7/10	7/7/10
Chemical Name												
Volatile Organic Compounds (UG/KG)												
1,1,1-Trichloroethane	2 J	NS	6 U	6 U	7 U	6 U	NS	3 U	NS	3 U	3 U	3 U
1,1,2,2-Tetrachloroethane	2 J	NS	2 J	6 U	7 U	6 J	NS	3 U	NS	1.4 J	3 U	3 U
1,1,2-Trichloro-1,2,2-trifluoroethane(Freon-113)	6 U	NS	6 U	6 U	7 U	6 U	NS	3 U	NS	3 U	3 U	3 U
1,1,2-Trichloroethane	6 U	NS	6 U	6 U	7 U	6 U	NS	3 U	NS	3 U	3 U	3 U
1,1-Dichloroethane	6 U	NS	6 U	6 U	7 U	6 U	NS	3 U	NS	3 U	3 U	3 U
1,1-Dichloroethene	6 U	NS	6 U	6 U	7 U	6 U	NS	3 U	NS	3 U	3 U	3 U
1,2,4-Trichlorobenzene	6 U	NS	6 U	6 U	7 U	6 U	NS	3 U	NS	3 U	3 U	3 U
1,2-Dibromo-3-chloropropane	6 U	NS	6 U	6 U	7 U	6 U	NS	3 U	NS	3 U	3 U	3 U
1,2-Dibromoethane	6 U	NS	6 U	6 U	7 U	6 U	NS	3 U	NS	3 U	3 U	3 U
1,2-Dichlorobenzene	6 U	NS	6 U	6 U	7 U	6 U	NS	3 U	NS	3 U	3 U	3 U
1,2-Dichloroethane	6 U	NS	6 U	6 U	9	6 U	NS	3 U	NS	3 U	3 U	3 U
1,2-Dichloroethene (total)	12 U	NS	9 J	12 U	14 U	12 U	NS	1.5 J	NS	8.5 J	7.2 J	6 U
1,2-Dichloropropane	6 U	NS	6 U	6 U	7 U	6 U	NS	3 U	NS	3 U	3 U	3 U
1,3-Dichlorobenzene	6 U	NS	6 U	6 U	7 U	6 U	NS	3 U	NS	3 U	3 U	3 U
1,4-Dichlorobenzene	6 U	NS	6 U	6 U	7 U	6 U	NS	3 U	NS	3 U	3 U	3 U
2-Butanone	30 U	NS	30 U	11 J	70	30 U	NS	15 U	NS	15 U	15 U	15 U
2-Hexanone	30 U	NS	30 U	30 U	34 U	30 U	NS	15 U	NS	15 U	15 U	15 U
4-Methyl-2-pentanone	30 U	NS	30 U	30 U	34 U	30 U	NS	15 U	NS	15 U	15 U	15 U
Acetone	28 J	NS	19 J	39	300	28 J	NS	23 J	NS	21 J	16 J	19 J
Benzene	6 U	NS	2 J	6 U	7 U	6 U	NS	3 U	NS	3 U	3 U	3 U
Bromodichloromethane	6 U	NS	6 U	6 U	7 U	6 U	NS	3 U	NS	3 U	3 U	3 U
Bromoform	6 U	NS	6 U	6 U	7 U	6 U	NS	3 U	NS	3 U	3 U	3 U
Bromomethane	6 U	NS	6 U	6 U	7 U	6 U	NS	3 U	NS	3 U	3 U	3 U
Carbon disulfide	89	NS	720 U	6 U	7 U	26	NS	7.1	NS	14	28	8.2
Carbon tetrachloride	4,400	NS	9,500	5 J	12	260,000	NS	170	NS	120	260 J	200
Chlorobenzene	6 U	NS	6 U	6 U	7 U	6 U	NS	3 U	NS	3 U	3 U	3 U
Chloroethane	6 U	NS	6 U	6 U	7 U	6 U	NS	3 U	NS	3 U	3 U	3 U
Chloroform	520 J	NS	760	6 U	5 J	660 J	NS	230 J	NS	470	460	130 J
Chloromethane	6 U	NS	6 U	6 U	7 U	6 U	NS	3 U	NS	3 U	3 U	3 U
cis-1,2-Dichloroethene	6 U	NS	9	6 U	7 U	6 U	NS	1.5 J	NS	8.5	7.2	3 U
cis-1,3-Dichloropropene	6 U	NS	6 U	6 U	7 U	6 U	NS	3 U	NS	3 U	3 U	3 U
Cyclohexane	6 U	NS	6 U	6 U	7 U	6 U	NS	3 U	NS	3 U	3 U	3 U
Dibromochloromethane	6 U	NS	6 U	6 U	7 U	6 U	NS	3 U	NS	3 U	3 U	3 U
Dichlorodifluoromethane (Freon-12)	6 U	NS	6 U	6 U	7 U	6 U	NS	3 U	NS	3 U	3 U	3 U
Ethylbenzene	6 U	NS	6 U	6 U	7 U	6 U	NS	3 U	NS	3 U	3 U	3 U
Isopropylbenzene	6 U	NS	6 U	6 U	7 U	6 U	NS	3 U	NS	3 U	3 U	3 U
m- and p-Xylene	12 U	NS	12 U	12 U	14 U	12 U	NS	6 U	NS	6 U	6 U	6 U
Methyl acetate	6 U	NS	6 U	6 U	7 U	6 U	NS	3.6 U	NS	3.6 U	3.6 U	3.6 U
Methylcyclohexane	6 U	NS	6 U	6 U	7 U	6 U	NS	3 U	NS	3 U	3 U	3 U
Methylene chloride	30 U	NS	4 J	30 U	34 U	30 U	NS	15 U	NS	15 U	15 U	15 U
Methyl-tert-butyl ether (MTBE)	6 U	NS	6 U	6 U	7 U	6 U	NS	3 U	NS	3 U	3 U	3 U
o-Xylene	6 U	NS	6 U	6 U	7 U	6 U	NS	3 U	NS	3 U	3 U	3 U
Styrene	6 U	NS	6 U	6 U	7 U	6 U	NS	3 U	NS	3 U	3 U	3 U
Tetrachloroethene	290 J	NS	720 U	6 U	7 U	1,400 J	NS	190 J	NS	550	350	140
Toluene	47	NS	17	6 U	7 U	35	NS	3 U	NS	3 U	3 U	3 U
trans-1,2-Dichloroethene	6 U	NS	6 U	6 U	7 U	6 U	NS	3 U	NS	3 U	3 U	3 U
trans-1,3-Dichloropropene	6 U	NS	6 U	6 U	7 U	6 U	NS	3 U	NS	3 U	3 U	3 U
Trichloroethene	8	NS	19	6 U	7 U	16	NS	7	NS	11	12	1.6 J
Trichlorofluoromethane(Freon-11)	6 U	NS	6 U	6 U	7 U	6 U	NS	3 U	NS	3 U	3 U	3 U
Vinyl chloride	6 U	NS	6 U	6 U	7 U	6 U	NS	3 U	NS	3 U	3 U	3 U
Xylene, total	18 U	NS	18 U	18 U	21 U	18 U	NS	9 U	NS	9 U	9 U	9 U
Total Metals (MG/KG)												
Aluminum	NS	10,700	NS	NS	NS	NS	3,640	NS	5,330	NS	NS	NS
Antimony	NS	0.1 B	NS	NS	NS	NS	0.15 B	NS	0.49 U	NS	NS	NS
Arsenic	NS	2.1	NS	NS	NS	NS	1.2	NS	1.7	NS	NS	NS
Barium	NS	51.2	NS	NS	NS	NS	19.1	NS	26.5	NS	NS	NS
Beryllium	NS	0.43	NS	NS	NS	NS	0.32 B	NS	0.3 J	NS	NS	NS
Cadmium	NS	0.01 B	NS	NS	NS	NS	0.06 B	NS	0.02 J	NS	NS	NS
Calcium	NS	263	NS	NS	NS	NS	119	NS	147	NS	NS	NS
Chromium	NS	21.2	NS	NS	NS	NS	11.4	NS	14.1	NS	NS	NS
Cobalt	NS	5.3	NS	NS	NS	NS	4.8	NS	3.7	NS	NS	NS
Copper	NS	12.1	NS	NS	NS	NS	6.6	NS	7.6	NS	NS	NS
Iron	NS	6,430	NS	NS	NS	NS	3,910	NS	3,190	NS	NS	NS
Lead	NS	9.6	NS	NS	NS	NS	5.2	NS	6.6	NS	NS	NS
MAGNESIUM	NS	1,690	NS	NS	NS	NS	633	NS	719	NS	NS	NS
Manganese	NS	55.8	NS	NS	NS	NS	25.5	NS	22.3	NS	NS	NS
Mercury	NS	0.04	NS	NS	NS	NS	0.02 B	NS	0.05	NS	NS	NS
Nickel	NS	8.5	NS	NS	NS	NS	4.4 B	NS	5.4	NS	NS	NS
Potassium	NS	1,160	NS	NS	NS	NS	665	NS	713	NS	NS	NS
Selenium	NS	0.26 B	NS	NS	NS	NS	1.2 U	NS	0.48 U	NS	NS	NS
Silver	NS	0.21 B	NS	NS	NS	NS	0.2 B	NS	0.1 J	NS	NS	NS
Sodium	NS	35.6 B	NS	NS	NS	NS	24.1 B	NS	502	NS	NS	NS
Thallium	NS	0.49 B	NS	NS	NS	NS	0.26 B	NS	0.34 U	NS	NS	NS
Vanadium	NS	27.1	NS	NS	NS	NS	17.2	NS	18.3	NS	NS	NS
Zinc	NS	21.7	NS	NS	NS	NS	12.3	NS	12.8	NS	NS	NS
Wet Chemistry (UG/G)												
Total organic carbon (TOC)	NS	1,900	NS	NS	NS	NS	2,400	NS	3,500	NS	NS	NS

Station ID	IS47SB25									
Sample ID	IS47SB25-0609	IS47SB25-0616	IS47SB25-0912	IS47SB25-1215	IS47SB25-1516	IS47SB25A-0609	IS47SB25A-0618	IS47SB25A-0912	IS47SB25A-1215	IS47SB25A-1518
Sample Date	4/16/09	4/16/09	4/16/09	4/16/09	4/16/09	7/7/10	7/7/10	7/7/10	7/7/10	7/7/10
Chemical Name										
Volatile Organic Compounds (UG/KG)										
1,1,1-Trichloroethane	6 U	NS	6 U	8 U	6 U	2.8 U	NS	1.4 J	0.52 J	1.6 J
1,1,2,2-Tetrachloroethane	4 J	NS	6 U	8 U	6 U	2.8 U	NS	3 U	3 U	3 U
1,1,2-Trichloro-1,2,2-trifluoroethane(Freon-113)	6 U	NS	6 U	8 U	6 U	2.8 U	NS	3 U	3 U	3 U
1,1,2-Trichloroethane	6 U	NS	6 U	8 U	6 U	2.8 U	NS	3 U	3 U	3 U
1,1-Dichloroethane	6 U	NS	6 U	8 U	6 U	2.8 U	NS	3 U	3 U	3 U
1,1-Dichloroethene	6 U	NS	6 U	8 U	6 U	2.8 U	NS	3 U	3 U	3 U
1,2,4-Trichlorobenzene	6 U	NS	6 U	8 U	6 U	2.8 U	NS	3 U	3 U	3 U
1,2-Dibromo-3-chloropropane	6 U	NS	6 U	8 U	6 U	2.8 U	NS	3 U	3 U	3 U
1,2-Dibromoethane	6 U	NS	6 U	8 U	6 U	2.8 U	NS	3 U	3 U	3 U
1,2-Dichlorobenzene	6 U	NS	6 U	8 U	6 U	2.8 U	NS	3 U	3 U	3 U
1,2-Dichloroethane	6 U	NS	6 U	10	48	2.8 U	NS	3 U	1.6 J	3 U
1,2-Dichloroethene (total)	4 J	NS	70	16 U	13 U	5.5 U	NS	3.3 J	3.5 J	5.1 J
1,2-Dichloropropane	6 U	NS	6 U	8 U	6 U	2.8 U	NS	3 U	3 U	3 U
1,3-Dichlorobenzene	6 U	NS	6 U	8 U	6 U	2.8 U	NS	3 U	3 U	3 U
1,4-Dichlorobenzene	6 U	NS	6 U	8 U	6 U	2.8 U	NS	3 U	3 U	3 U
2-Butanone	30 U	NS	29 U	120	93	14 U	NS	15 U	15 U	7.6 J
2-Hexanone	30 U	NS	29 U	39 U	32 U	14 U	NS	15 U	15 U	15 U
4-Methyl-2-pentanone	30 U	NS	29 U	39 U	32 U	14 U	NS	15 U	15 U	15 U
Acetone	32	NS	22 J	490	480	19 J	NS	32	28 J	47
Benzene	6 U	NS	6 U	8 U	6 U	2.8 U	NS	3 U	3 U	3 U
Bromodichloromethane	6 U	NS	6 U	8 U	6 U	2.8 U	NS	3 U	3 U	3 U
Bromoform	6 U	NS	6 U	8 U	6 U	2.8 U	NS	3 U	3 U	3 U
Bromomethane	6 U	NS	6 U	8 U	6 U	2.8 U	NS	3 U	3 U	3 U
Carbon disulfide	93	NS	26	8 U	6 U	1.4 J	NS	47	62	14
Carbon tetrachloride	220 J	NS	220	11	28	12	NS	230	400	6.2
Chlorobenzene	6 U	NS	6 U	8 U	6 U	2.8 U	NS	3 U	3 U	3 U
Chloroethane	6 U	NS	6 U	8 U	6 U	2.8 U	NS	3 U	3 U	3 U
Chloroform	170 J	NS	200 J	15	21	110	NS	2,700	1,300	2,300
Chloromethane	6 U	NS	6 U	8 U	6 U	2.8 U	NS	3.3 J	5 J	5.3 J
cis-1,2-Dichloroethene	4 J	NS	67	8 U	6 U	2.8 U	NS	3.3 J	3.5 J	5.1 J
cis-1,3-Dichloropropene	6 U	NS	6 U	8 U	6 U	2.8 U	NS	3 U	3 U	3 U
Cyclohexane	6 U	NS	6 U	8 U	6 U	2.8 U	NS	3 U	3 U	3 U
Dibromochloromethane	6 U	NS	6 U	8 U	6 U	2.8 U	NS	3 U	3 U	3 U
Dichlorodifluoromethane (Freon-12)	6 U	NS	6 U	8 U	6 U	2.8 U	NS	3 U	3 U	3 U
Ethylbenzene	6 U	NS	6 U	8 U	6 U	2.8 U	NS	3 U	3 U	3 U
Isopropylbenzene	6 U	NS	6 U	8 U	6 U	2.8 U	NS	3 U	3 U	3 U
m- and p-Xylene	12 U	NS	12 U	16 U	13 U	5.5 U	NS	6 U	6 U	6 U
Methyl acetate	6 U	NS	6 U	8 U	6 U	3.3 U	NS	3.6 U	3.6 U	3.6 U
Methylcyclohexane	6 U	NS	6 U	8 U	6 U	2.8 U	NS	3 U	3 U	3 U
Methylene chloride	3 J	NS	4 JB	5 JB	4 J	14 U	NS	14 J	15 U	17 J
Methyl-tert-butyl ether (MTBE)	6 U	NS	6 U	8 U	6 U	2.8 U	NS	3 U	3 U	3 U
o-Xylene	6 U	NS	6 U	8 U	6 U	2.8 U	NS	3 U	3 U	3 U
Styrene	6 U	NS	6 U	8 U	6 U	2.8 U	NS	3 U	3 U	3 U
Tetrachloroethene	500	NS	200	8 U	4 J	3.5 J	NS	97	51	72
Toluene	15	NS	6 U	8 U	6 U	2.8 U	NS	4.6 J	3 U	5.6 J
trans-1,2-Dichloroethene	6 U	NS	3 J	8 U	6 U	2.8 U	NS	3 U	3 U	3 U
trans-1,3-Dichloropropene	6 U	NS	6 U	8 U	6 U	2.8 U	NS	3 U	3 U	3 U
Trichloroethene	44	NS	72	8 U	6 U	2.8 U	NS	2.5 J	2.1 J	3.4 J
Trichlorofluoromethane(Freon-11)	6 U	NS	6 U	8 U	6 U	2.8 U	NS	3 U	3 U	3 U
Vinyl chloride	6 U	NS	6 U	8 U	6 U	2.8 U	NS	3 U	3 U	3 U
Xylene, total	18 U	NS	17 U	24 U	19 U	8.2 U	NS	9 U	9 U	9 U
Total Metals (MG/KG)										
Aluminum	NS	8,030	NS	NS	NS	NS	3,880	NS	NS	NS
Antimony	NS	0.87 U	NS	NS	NS	NS	0.42 U	NS	NS	NS
Arsenic	NS	1.4	NS	NS	NS	NS	1.6	NS	NS	NS
Barium	NS	58	NS	NS	NS	NS	19.5	NS	NS	NS
Beryllium	NS	0.45 B	NS	NS	NS	NS	0.26 J	NS	NS	NS
Cadmium	NS	0.06 B	NS	NS	NS	NS	0.06 J	NS	NS	NS
Calcium	NS	382	NS	NS	NS	NS	114	NS	NS	NS
Chromium	NS	14.7	NS	NS	NS	NS	12.4	NS	NS	NS
Cobalt	NS	4	NS	NS	NS	NS	2.7	NS	NS	NS
Copper	NS	8.9	NS	NS	NS	NS	5.5	NS	NS	NS
Iron	NS	5,680	NS	NS	NS	NS	2,890	NS	NS	NS
Lead	NS	9.8	NS	NS	NS	NS	5.4	NS	NS	NS
MAGNESIUM	NS	615	NS	NS	NS	NS	590	NS	NS	NS
Manganese	NS	94.5	NS	NS	NS	NS	19.3	NS	NS	NS
Mercury	NS	0.03 B	NS	NS	NS	NS	0.05	NS	NS	NS
Nickel	NS	5.5	NS	NS	NS	NS	4.1	NS	NS	NS
Potassium	NS	668	NS	NS	NS	NS	566	NS	NS	NS
Selenium	NS	0.42 B	NS	NS	NS	NS	0.58 U	NS	NS	NS
Silver	NS	0.16 B	NS	NS	NS	NS	0.15 J	NS	NS	NS
Sodium	NS	49.2 B	NS	NS	NS	NS	327	NS	NS	NS
Thallium	NS	0.11 B	NS	NS	NS	NS	0.42 U	NS	NS	NS
Vanadium	NS	21.5	NS	NS	NS	NS	18.2	NS	NS	NS
Zinc	NS	11.3	NS	NS	NS	NS	10.4	NS	NS	NS
Wet Chemistry (UG/G)										
Total organic carbon (TOC)	NS	19,000	NS	NS	NS	NS	3,200	NS	NS	NS

Notes:

B - Analyte not detected above the level reported in blanks
J - Analyte present. Value may or may not be accurate or precise
JB - NO MATCHING QUALIFIER DEFINITION FOUND IN LOOKUP LIST
NS - Not sampled
U - The material was analyzed for, but not detected
MG/KG - Milligrams per kilogram
UG/G - Micrograms per gram
UG/KG - Micrograms per kilogram

Indian Head
CTO-51 165, Site 47
Subsurface Soil Detected Analytical Results
Baseline June 2010

Station ID	IS47SB20											
Sample ID	IS47SB20-0809	IS47SB20-0817	IS47SB20-0912	IS47SB20-1215	IS47SB20-1517	IS47SB20P-0817	IS47SB20P-1215	IS47SB20A-0609	IS47SB20A-0618	IS47SB20A-0912	IS47SB20A-1215	IS47SB20A-1518
Sample Date	4/29/09	4/29/09	4/29/09	4/29/09	4/29/09	4/29/09	4/29/09	7/7/10	7/7/10	7/7/10	7/7/10	7/7/10
Chemical Name												
Volatile Organic Compounds (UG/KG)												
1,1,1-Trichloroethane	3 J	NS	6 J	6 U	7 U	3 J	6 U	3 U	NS	380 U	170 U	170 U
1,1,2,2-Tetrachloroethane	6 U	NS	6 U	6 U	7 U	6 U	6 U	3 U	NS	380 U	170 U	170 U
1,2-Dichloroethane	6 U	NS	6 U	6 U	14	9	6 U	3 U	NS	380 U	170 U	170 U
1,2-Dichloroethene (total)	12 U	NS	4 J	12 U	6 J	12 U	12 U	6 U	NS	750 U	340 U	340 U
2-Butanone	30 U	NS	31 U	30 U	53	26 J	30 U	15 U	NS	1900 U	850 U	860 U
Acetone	45	NS	37	14 J	160	310	21 J	23 J	NS	1900 U	850 U	860 U
Benzene	6 U	NS	6 U	6 U	7 U	6 U	6 U	3 U	NS	380 U	170 U	170 U
Bromodichloromethane	6 U	NS	6 U	6 U	7 U	6 U	6 U	3 U	NS	380 U	170 U	170 U
Bromomethane	6 U	NS	6 U	6 U	7 U	6 U	6 U	3 U	NS	170 J	170 U	78 J
Carbon disulfide	140	NS	280 J	6 U	7 U	200	4 J	1.2 J	NS	380 U	170 U	170 U
Carbon tetrachloride	19,000	NS	100,000	9	6 J	30,000	5 J	43	NS	25,000	12,000	2,700
Chloroform	2,800	NS	3,900	6 J	5 J	3,200	3 J	40	NS	3,800	11,000	6,100
Chloromethane	6 U	NS	9	6 U	7 U	6 U	6 U	3 U	NS	380 U	170 U	170 U
cis-1,2-Dichloroethene	6 U	NS	4 J	6 U	6 J	6 U	6 U	3 U	NS	380 U	170 U	170 U
Methylcyclohexane	2 J	NS	3 J	6 U	7 U	6 U	6 U	3 U	NS	380 U	170 U	170 U
Methylene chloride	13 JB	NS	14 JB	11 JB	15 JB	110 B	11 JB	15 U	NS	1900 U	850 U	860 U
Tetrachloroethene	50	NS	160	6 U	7 U	64	6 U	3 U	NS	380 U	200 J	120 J
Toluene	27	NS	110	6 U	7 U	23	6 U	3 U	NS	380 U	170 U	170 U
trans-1,2-Dichloroethene	6 U	NS	6 U	6 U	7 U	6 U	6 U	3 U	NS	380 U	170 U	170 U
Trichloroethene	4 J	NS	7	4 J	40	6 U	7	3 U	NS	380 U	170 U	170 U
Total Metals (MG/KG)												
Aluminum	NS	6,700	NS	NS	NS	NS	NS	NS	4,360	NS	NS	NS
Antimony	NS	0.64 U	NS	NS	NS	NS	NS	NS	0.38 U	NS	NS	NS
Arsenic	NS	2.4	NS	NS	NS	NS	NS	NS	1.9	NS	NS	NS
Barium	NS	37.3	NS	NS	NS	NS	NS	NS	19.3	NS	NS	NS
Beryllium	NS	0.49	NS	NS	NS	NS	NS	NS	0.26 J	NS	NS	NS
Cadmium	NS	0.08 B	NS	NS	NS	NS	NS	NS	0.07 J	NS	NS	NS
Calcium	NS	300	NS	NS	NS	NS	NS	NS	271	NS	NS	NS
Chromium	NS	15.6	NS	NS	NS	NS	NS	NS	11.8	NS	NS	NS
Cobalt	NS	5.9	NS	NS	NS	NS	NS	NS	4.5	NS	NS	NS
Copper	NS	10.5	NS	NS	NS	NS	NS	NS	5.6	NS	NS	NS
Iron	NS	5,950	NS	NS	NS	NS	NS	NS	4,340	NS	NS	NS
Lead	NS	7.1	NS	NS	NS	NS	NS	NS	5.8	NS	NS	NS
MAGNESIUM	NS	1,220	NS	NS	NS	NS	NS	NS	594	NS	NS	NS
Manganese	NS	48.1	NS	NS	NS	NS	NS	NS	25.4	NS	NS	NS
Mercury	NS	0.08	NS	NS	NS	NS	NS	NS	0.21	NS	NS	NS
Nickel	NS	7.2	NS	NS	NS	NS	NS	NS	5.3	NS	NS	NS
Potassium	NS	722	NS	NS	NS	NS	NS	NS	602	NS	NS	NS
Selenium	NS	0.32 B	NS	NS	NS	NS	NS	NS	0.54 U	NS	NS	NS
Silver	NS	0.09 B	NS	NS	NS	NS	NS	NS	0.41 J	NS	NS	NS
Sodium	NS	35.4 B	NS	NS	NS	NS	NS	NS	765	NS	NS	NS
Thallium	NS	0.1 B	NS	NS	NS	NS	NS	NS	0.38 U	NS	NS	NS
Vanadium	NS	22.8	NS	NS	NS	NS	NS	NS	17.5	NS	NS	NS
Zinc	NS	19.9	NS	NS	NS	NS	NS	NS	12.1	NS	NS	NS
Wet Chemistry (UG/G)												
Total organic carbon (TOC)	NS	2,700	NS	NS	NS	NS	NS	NS	1,000	NS	NS	NS

Notes:
Shading indicates detection
B - Analyte not detected above the level reported in blanks
J - Analyte present. Value may or may not be accurate or precise
JB - NO MATCHING QUALIFIER DEFINITION FOUND IN LOOKUP LIST
NS - Not sampled

U - The material was analyzed for, but not detected
MG/KG - Milligrams per kilogram
UG/G - Micrograms per gram
UG/KG - Micrograms per kilogram

Indian Head
CTO-51 165, Site 47
Subsurface Soil Detected Analytical Results
Baseline June 2010

Station ID	IS47SB21										IS47SB22									
Sample ID	IS47SB21-0809	IS47SB21-0818	IS47SB21-0912	IS47SB21-1215	IS47SB21-1518	IS47SB21A-0710	IS47SB21A-0719	IS47SB21A-1013	IS47SB21A-1316	IS47SB21A-1619	IS47SB22-0809	IS47SB22-0818	IS47SB22-0912	IS47SB22-1215	IS47SB22-1518	IS47SB22A-0710	IS47SB22A-0719	IS47SB22A-1013	IS47SB22A-1316	IS47SB22A-1619
Sample Date	4/29/09	4/29/09	4/29/09	4/29/09	4/29/09	7/7/10	7/7/10	7/7/10	7/7/10	7/7/10	4/29/09	4/29/09	4/29/09	4/29/09	4/29/09	7/7/10	7/7/10	7/7/10	7/7/10	7/7/10
Chemical Name																				
Volatile Organic Compounds (UG/KG)																				
1,1,1-Trichloroethane	6 U	NS	6 J	6 U	6 U	3 U	NS	3 U	2.8 U	3 U	6 U	NS	13	6 U	6 U	3 U	NS	400 U	2.8 U	3 U
1,1,2,2-Tetrachloroethane	6 U	NS	6 U	6 U	6 U	3 U	NS	3 U	2.8 U	3 U	6 U	NS	5 J	6 U	6 U	3 U	NS	400 U	2.8 U	3 U
1,2-Dichloroethane	6 U	NS	6 U	6 U	2 J	3 U	NS	3 U	2.8 U	3 U	6 U	NS	4 J	6 U	5 J	3 U	NS	400 U	2.8 U	3 U
1,2-Dichloroethene (total)	12 U	NS	8 J	12 U	13 U	6 U	NS	6 U	5.5 U	1.4 J	12 U	NS	14	12 U	13 U	6 U	NS	800 U	5.5 U	1.4 J
2-Butanone	30 U	NS	31 U	30 U	15 J	15 U	NS	15 U	8.1 J	15 U	30 U	NS	31 U	29 U	32 U	15 U	NS	2000 U	14 U	15 U
Acetone	25 J	NS	33	28 J	72	16 J	NS	38	72	38	33	NS	86	29 U	35	35	NS	2000 U	27 J	45
Benzene	6 U	NS	6 U	6 U	6 U	3 U	NS	3 U	2.8 U	3 U	6 U	NS	6 U	6 U	6 U	3 U	NS	400 U	2.8 U	3 U
Bromodichloromethane	6 U	NS	6 U	6 U	6 U	3 U	NS	3 U	2.8 U	3 U	6 U	NS	6 U	6 U	6 U	3 U	NS	400 U	2.8 U	3 U
Bromomethane	6 U	NS	6 U	6 U	6 U	3 U	NS	3 U	2.8 U	3 U	6 U	NS	6 U	6 U	6 U	3 U	NS	400 U	2.8 U	3 U
Carbon disulfide	6 U	NS	120	64	6 U	2.9 J	NS	7.6	20	11	6 U	NS	260 J	200	6 U	1.8 J	NS	300 J	24	12
Carbon tetrachloride	6 U	NS	23,000	930	6 U	180	NS	98	96	43	7	NS	58,000	2,800	4 J	29	NS	17,000	100	31
Chloroform	6 U	NS	1,400 J	2,100	6 J	180	NS	850	900	490	6 U	NS	8,100	3,700	5 J	71	NS	12,000	710	240
Chloromethane	6 U	NS	6 U	6 U	6 U	3 U	NS	3 U	2.8 U	3 U	6 U	NS	6 U	6 U	6 U	3 U	NS	400 U	2.8 U	3 U
cis-1,2-Dichloroethene	6 U	NS	8	6 U	6 U	3 U	NS	3 U	2.8 U	1.4 J	6 U	NS	14	6 U	6 U	3 U	NS	400 U	2.8 U	1.4 J
Methylcyclohexane	6 U	NS	6 U	6 U	6 U	3 U	NS	3 U	2.8 U	3 U	6 U	NS	6 U	6 U	6 U	3 U	NS	400 U	2.8 U	3 U
Methylene chloride	9 JB	NS	12 JB	16 JB	12 JB	15 U	NS	15 U	14 U	15 U	11 JB	NS	20 JB	16 JB	12 JB	15 U	NS	2000 U	14 U	15 U
Tetrachloroethene	6 U	NS	31	3 J	6 U	3.2 J	NS	19	20	5.1 J	6 U	NS	160	4 J	6 U	3 U	NS	400 U	6.2	3.9 J
Toluene	6 U	NS	69	6 U	6 U	3 U	NS	3 J	1.8 J	3 U	6 U	NS	280 J	6 U	6 U	3 U	NS	400 U	2.8 U	3 U
trans-1,2-Dichloroethene	6 U	NS	6 U	6 U	6 U	3 U	NS	3 U	2.8 U	3 U	6 U	NS	6 U	6 U	6 U	3 U	NS	400 U	2.8 U	3 U
Trichloroethene	6 U	NS	39	4 J	9	3 U	NS	3 U	2.8 U	0.79 J	2 J	NS	51	3 J	6 J	3 U	NS	400 U	2.8 U	3 U
Total Metals (MG/KG)																				
Aluminum	NS	3,690	NS	NS	NS	NS	3,290	NS	NS	NS	NS	4,280	NS	NS	NS	NS	3,530	NS	NS	NS
Antimony	NS	0.12 B	NS	NS	NS	NS	0.34 U	NS	NS	NS	NS	0.1 B	NS	NS	NS	NS	0.37 U	NS	NS	NS
Arsenic	NS	1.7	NS	NS	NS	NS	1.4	NS	NS	NS	NS	1.5	NS	NS	NS	NS	1.3	NS	NS	NS
Barium	NS	20.4	NS	NS	NS	NS	17.1	NS	NS	NS	NS	23.4	NS	NS	NS	NS	16.5	NS	NS	NS
Beryllium	NS	0.3 B	NS	NS	NS	NS	0.23 J	NS	NS	NS	NS	0.31 B	NS	NS	NS	NS	0.25 J	NS	NS	NS
Cadmium	NS	0.07 B	NS	NS	NS	NS	0.06 J	NS	NS	NS	NS	0.04 B	NS	NS	NS	NS	0.07 J	NS	NS	NS
Calcium	NS	124	NS	NS	NS	NS	99.8	NS	NS	NS	NS	141	NS	NS	NS	NS	103	NS	NS	NS
Chromium	NS	11.1	NS	NS	NS	NS	11.2	NS	NS	NS	NS	12	NS	NS	NS	NS	10.3	NS	NS	NS
Cobalt	NS	4.3	NS	NS	NS	NS	3.8	NS	NS	NS	NS	5	NS	NS	NS	NS	3.9	NS	NS	NS
Copper	NS	7.8	NS	NS	NS	NS	5	NS	NS	NS	NS	7.3	NS	NS	NS	NS	5	NS	NS	NS
Iron	NS	3,660	NS	NS	NS	NS	2,920	NS	NS	NS	NS	3,890	NS	NS	NS	NS	2,870	NS	NS	NS
Lead	NS	5.9	NS	NS	NS	NS	4.9	NS	NS	NS	NS	5.9	NS	NS	NS	NS	5.1	NS	NS	NS
MAGNESIUM	NS	687	NS	NS	NS	NS	533	NS	NS	NS	NS	661	NS	NS	NS	NS	507	NS	NS	NS
Manganese	NS	23.9	NS	NS	NS	NS	17.2	NS	NS	NS	NS	23.1	NS	NS	NS	NS	16.2	NS	NS	NS
Mercury	NS	0.09	NS	NS	NS	NS	0.02 J	NS	NS	NS	NS	0.08	NS	NS	NS	NS	0.2	NS	NS	NS
Nickel	NS	4.8	NS	NS	NS	NS	4.3	NS	NS	NS	NS	5	NS	NS	NS	NS	4.3	NS	NS	NS
Potassium	NS	635	NS	NS	NS	NS	520	NS	NS	NS	NS	671	NS	NS	NS	NS	582	NS	NS	NS
Selenium	NS	1 U	NS	NS	NS	NS	0.48 U	NS	NS	NS	NS	0.86 U	NS	NS	NS	NS	0.52 U	NS	NS	NS
Silver	NS	0.1 B	NS	NS	NS	NS	0.12 J	NS	NS	NS	NS	0.15 B	NS	NS	NS	NS	0.38 J	NS	NS	NS
Sodium	NS	23.8 B	NS	NS	NS	NS	744	NS	NS	NS	NS	23.6 B	NS	NS	NS	NS	667	NS	NS	NS
Thallium	NS	1.5 U	NS	NS	NS	NS	0.34 U	NS	NS	NS	NS	0.26 B	NS	NS	NS	NS	0.37 U	NS	NS	NS
Vanadium	NS	16.7	NS	NS	NS	NS	16	NS	NS	NS	NS	18	NS	NS	NS	NS	17	NS	NS	NS
Zinc	NS	15.9	NS	NS	NS	NS	11.5	NS	NS	NS	NS	12.5	NS	NS	NS	NS	11.1	NS	NS	NS
Wet Chemistry (UG/G)																				
Total organic carbon (TOC)	NS	2,000	NS	NS	NS	NS	750	NS	NS	NS	NS	4,300	NS	NS	NS	NS	350 J	NS	NS	NS

Notes:
Shading indicates detection
B - Analyte not detected above the level reported in blanks
J - Analyte present. Value may or may not be accurate or precise
JB - NO MATCHING QUALIFIER DEFINITION FOUND IN LOOKUP LIST
NS - Not sampled

U - The material was analyzed for, but not detected
MG/KG - Milligrams per kilogram
UG/G - Micrograms per gram
UG/KG - Micrograms per kilogram

Indian Head
CTO-51 165, Site 47
Subsurface Soil Detected Analytical Results
Baseline June 2010

Station ID	IS47SB23											
Sample ID	IS47SB23-0609	IS47SB23-0617	IS47SB23-0912	IS47SB23-1215	IS47SB23-1517	IS47SB23A-0508	IS47SB23A-0517	IS47SB23A-0811	IS47SB23A-1114	IS47SB23A-1417	IS47SB23AP-0517	IS47SB23AP-0811
Sample Date	4/16/09	4/16/09	4/16/09	4/16/09	4/16/09	7/7/10	7/7/10	7/7/10	7/7/10	7/7/10	7/7/10	7/7/10
Chemical Name												
Volatile Organic Compounds (UG/KG)												
1,1,1-Trichloroethane	6 U	NS	2 J	6 U	10 U	3 U	NS	6.6	170 U	200 U	NS	2.1 J
1,1,2,2-Tetrachloroethane	6 U	NS	2 J	6 U	10 U	3 U	NS	1.7 J	170 U	200 U	NS	3 U
1,2-Dichloroethane	6 U	NS	4 J	6 U	74	3 U	NS	2.5 J	170 U	200 U	NS	3 U
1,2-Dichloroethene (total)	11 U	NS	22	17	19 U	6 U	NS	4.3 J	340 U	400 U	NS	2.4 J
2-Butanone	28 U	NS	30 U	29 U	380	15 U	NS	15 U	840 U	1000 U	NS	15 U
Acetone	16 J	NS	24 J	22 J	1,600	48	NS	45	840 U	1000 U	NS	30 J
Benzene	6 U	NS	6 U	6 U	10 U	3 U	NS	3 U	170 U	200 U	NS	3 U
Bromodichloromethane	6 U	NS	6 U	6 U	10 U	3 U	NS	2 J	170 U	200 U	NS	3 U
Bromomethane	6 U	NS	6 U	6 U	10 U	3 U	NS	3 U	170 U	200 U	NS	3 U
Carbon disulfide	6 U	NS	340 J	2 J	4 J	1.6 J	NS	67 J	170 U	170 J	NS	220
Carbon tetrachloride	73	NS	4,200 J	6 U	21	8	NS	1,500	9,000	810	NS	2,800
Chloroform	56	NS	3,900 J	14	36	33	NS	1,200	2,600	7,200	NS	2,700
Chloromethane	6 U	NS	6 U	6 U	10 U	2.6 J	NS	40	170 U	200 U	NS	12
cis-1,2-Dichloroethene	6 U	NS	22	17	10 U	3 U	NS	4.3 J	170 U	200 U	NS	2.4 J
Methylcyclohexane	6 U	NS	6 U	6 U	10 U	3 U	NS	3 U	170 U	200 U	NS	3 U
Methylene chloride	28 U	NS	10 J	4 JB	5 J	15 U	NS	15 U	840 U	1000 U	NS	15 U
Tetrachloroethene	5 J	NS	790 J	17	5 J	3 U	NS	89 J	150 J	260 J	NS	210
Toluene	6 U	NS	19	6 U	10 U	3 U	NS	55	170 U	200 U	NS	15
trans-1,2-Dichloroethene	6 U	NS	6 U	6 U	10 U	3 U	NS	3 U	170 U	200 U	NS	3 U
Trichloroethene	6 U	NS	24	5 J	10 U	3 U	NS	5.1 J	170 U	200 U	NS	1.6 J
Total Metals (MG/KG)												
Aluminum	NS	6,050	NS	NS	NS	NS	3,210	NS	NS	NS	3,960	NS
Antimony	NS	0.26 B	NS	NS	NS	NS	0.12 J	NS	NS	NS	0.12 J	NS
Arsenic	NS	2	NS	NS	NS	NS	1.5	NS	NS	NS	1.4	NS
Barium	NS	36.6	NS	NS	NS	NS	19.1	NS	NS	NS	22.2	NS
Beryllium	NS	0.4 B	NS	NS	NS	NS	0.24 J	NS	NS	NS	0.33 J	NS
Cadmium	NS	0.02 B	NS	NS	NS	NS	0.02 J	NS	NS	NS	0.03 J	NS
Calcium	NS	232	NS	NS	NS	NS	84.1	NS	NS	NS	105	NS
Chromium	NS	14.3	NS	NS	NS	NS	11.1	NS	NS	NS	11.9	NS
Cobalt	NS	7.5	NS	NS	NS	NS	3.3	NS	NS	NS	5.2	NS
Copper	NS	17.6	NS	NS	NS	NS	5.5	NS	NS	NS	5.4	NS
Iron	NS	5,290	NS	NS	NS	NS	2,740	NS	NS	NS	2,940	NS
Lead	NS	7.5	NS	NS	NS	NS	5.4	NS	NS	NS	5.6	NS
MAGNESIUM	NS	872	NS	NS	NS	NS	497	NS	NS	NS	570	NS
Manganese	NS	45	NS	NS	NS	NS	16.2	NS	NS	NS	17.7	NS
Mercury	NS	0.03 B	NS	NS	NS	NS	0.02 J	NS	NS	NS	0.02 J	NS
Nickel	NS	6.5	NS	NS	NS	NS	3.6	NS	NS	NS	4.4	NS
Potassium	NS	875	NS	NS	NS	NS	515	NS	NS	NS	702	NS
Selenium	NS	1.2 U	NS	NS	NS	NS	0.43 U	NS	NS	NS	0.52 U	NS
Silver	NS	0.19 B	NS	NS	NS	NS	0.09 J	NS	NS	NS	0.1 J	NS
Sodium	NS	35.2 B	NS	NS	NS	NS	653	NS	NS	NS	570	NS
Thallium	NS	0.31 B	NS	NS	NS	NS	0.31 U	NS	NS	NS	0.37 U	NS
Vanadium	NS	24.2	NS	NS	NS	NS	15	NS	NS	NS	16.5	NS
Zinc	NS	18.6	NS	NS	NS	NS	8.4	NS	NS	NS	11.8	NS
Wet Chemistry (UG/G)												
Total organic carbon (TOC)	NS	25,000	NS	NS	NS	NS	780	NS	NS	NS	590	NS

Notes:
Shading indicates detection
B - Analyte not detected above the level reported in blanks
J - Analyte present. Value may or may not be accurate or precise
JB - NO MATCHING QUALIFIER DEFINITION FOUND IN LOOKUP LIST
NS - Not sampled

U - The material was analyzed for, but not detected
MG/KG - Milligrams per kilogram
UG/G - Micrograms per gram
UG/KG - Micrograms per kilogram

Indian Head
CTO-51 165, Site 47
Subsurface Soil Detected Analytical Results
Baseline June 2010

Station ID	IS47SB24A											
Sample ID	IS47SB24-0609	IS47SB24-0616	IS47SB24-0912	IS47SB24-1215	IS47SB24-1516	IS47SB24P-0609	IS47SB24P-0616	IS47SB24A-0508	IS47SB24A-0517	IS47SB24A-0811	IS47SB24A-1114	IS47SB24A-1417
Sample Date	4/16/09	4/16/09	4/16/09	4/16/09	4/16/09	4/16/09	4/16/09	7/7/10	7/7/10	7/7/10	7/7/10	7/7/10
Chemical Name												
Volatile Organic Compounds (UG/KG)												
1,1,1-Trichloroethane	2 J	NS	6 U	6 U	7 U	6 U	NS	3 U	NS	3 U	3 U	3 U
1,1,2,2-Tetrachloroethane	2 J	NS	2 J	6 U	7 U	6 J	NS	3 U	NS	1.4 J	3 U	3 U
1,2-Dichloroethane	6 U	NS	6 U	6 U	9	6 U	NS	3 U	NS	3 U	3 U	3 U
1,2-Dichloroethene (total)	12 U	NS	9 J	12 U	14 U	12 U	NS	1.5 J	NS	8.5 J	7.2 J	6 U
2-Butanone	30 U	NS	30 U	11 J	70	30 U	NS	15 U	NS	15 U	15 U	15 U
Acetone	28 J	NS	19 J	39	300	28 J	NS	23 J	NS	21 J	16 J	19 J
Benzene	6 U	NS	2 J	6 U	7 U	6 U	NS	3 U	NS	3 U	3 U	3 U
Bromodichloromethane	6 U	NS	6 U	6 U	7 U	6 U	NS	3 U	NS	3 U	3 U	3 U
Bromomethane	6 U	NS	6 U	6 U	7 U	6 U	NS	3 U	NS	3 U	3 U	3 U
Carbon disulfide	89	NS	720 U	6 U	7 U	26	NS	7.1	NS	14	28	8.2
Carbon tetrachloride	4,400	NS	9,500	5 J	12	260,000	NS	170	NS	120	260 J	200
Chloroform	520 J	NS	760	6 U	5 J	660 J	NS	230 J	NS	470	460	130 J
Chloromethane	6 U	NS	6 U	6 U	7 U	6 U	NS	3 U	NS	3 U	3 U	3 U
cis-1,2-Dichloroethene	6 U	NS	9	6 U	7 U	6 U	NS	1.5 J	NS	8.5	7.2	3 U
Methylcyclohexane	6 U	NS	6 U	6 U	7 U	6 U	NS	3 U	NS	3 U	3 U	3 U
Methylene chloride	30 U	NS	4 J	30 U	34 U	30 U	NS	15 U	NS	15 U	15 U	15 U
Tetrachloroethene	290 J	NS	720 U	6 U	7 U	1,400 J	NS	190 J	NS	550	350	140
Toluene	47	NS	17	6 U	7 U	35	NS	3 U	NS	3 U	3 U	3 U
trans-1,2-Dichloroethene	6 U	NS	6 U	6 U	7 U	6 U	NS	3 U	NS	3 U	3 U	3 U
Trichloroethene	8	NS	19	6 U	7 U	16	NS	7	NS	11	12	1.6 J
Total Metals (MG/KG)												
Aluminum	NS	10,700	NS	NS	NS	NS	3,640	NS	5,330	NS	NS	NS
Antimony	NS	0.1 B	NS	NS	NS	NS	0.15 B	NS	0.49 U	NS	NS	NS
Arsenic	NS	2.1	NS	NS	NS	NS	1.2	NS	1.7	NS	NS	NS
Barium	NS	51.2	NS	NS	NS	NS	19.1	NS	26.5	NS	NS	NS
Beryllium	NS	0.43	NS	NS	NS	NS	0.32 B	NS	0.3 J	NS	NS	NS
Cadmium	NS	0.01 B	NS	NS	NS	NS	0.06 B	NS	0.02 J	NS	NS	NS
Calcium	NS	263	NS	NS	NS	NS	119	NS	147	NS	NS	NS
Chromium	NS	21.2	NS	NS	NS	NS	11.4	NS	14.1	NS	NS	NS
Cobalt	NS	5.3	NS	NS	NS	NS	4.8	NS	3.7	NS	NS	NS
Copper	NS	12.1	NS	NS	NS	NS	6.6	NS	7.6	NS	NS	NS
Iron	NS	6,430	NS	NS	NS	NS	3,910	NS	3,190	NS	NS	NS
Lead	NS	9.6	NS	NS	NS	NS	5.2	NS	6.6	NS	NS	NS
MAGNESIUM	NS	1,690	NS	NS	NS	NS	633	NS	719	NS	NS	NS
Manganese	NS	55.8	NS	NS	NS	NS	25.5	NS	22.3	NS	NS	NS
Mercury	NS	0.04	NS	NS	NS	NS	0.02 B	NS	0.05	NS	NS	NS
Nickel	NS	8.5	NS	NS	NS	NS	4.4 B	NS	5.4	NS	NS	NS
Potassium	NS	1,160	NS	NS	NS	NS	665	NS	713	NS	NS	NS
Selenium	NS	0.26 B	NS	NS	NS	NS	1.2 U	NS	0.48 U	NS	NS	NS
Silver	NS	0.21 B	NS	NS	NS	NS	0.2 B	NS	0.1 J	NS	NS	NS
Sodium	NS	35.6 B	NS	NS	NS	NS	24.1 B	NS	502	NS	NS	NS
Thallium	NS	0.49 B	NS	NS	NS	NS	0.26 B	NS	0.34 U	NS	NS	NS
Vanadium	NS	27.1	NS	NS	NS	NS	17.2	NS	18.3	NS	NS	NS
Zinc	NS	21.7	NS	NS	NS	NS	12.3	NS	12.8	NS	NS	NS
Wet Chemistry (UG/G)												
Total organic carbon (TOC)	NS	1,900	NS	NS	NS	NS	2,400	NS	3,500	NS	NS	NS

Station ID	IS47SB25									
Sample ID	IS47SB25-0609	IS47SB25-0616	IS47SB25-0912	IS47SB25-1215	IS47SB25-1516	IS47SB25A-0609	IS47SB25A-0618	IS47SB25A-0912	IS47SB25A-1215	IS47SB25A-1518
Sample Date	4/16/09	4/16/09	4/16/09	4/16/09	4/16/09	7/7/10	7/7/10	7/7/10	7/7/10	7/7/10
Chemical Name										
Volatile Organic Compounds (UG/KG)										
1,1,1-Trichloroethane	6 U	NS	6 U	8 U	6 U	2.8 U	NS	1.4 J	0.52 J	1.6 J
1,1,2,2-Tetrachloroethane	4 J	NS	6 U	8 U	6 U	2.8 U	NS	3 U	3 U	3 U
1,2-Dichloroethane	6 U	NS	6 U	10	48	2.8 U	NS	3 U	1.6 J	3 U
1,2-Dichloroethene (total)	4 J	NS	70	16 U	13 U	5.5 U	NS	3.3 J	3.5 J	5.1 J
2-Butanone	30 U	NS	29 U	120	93	14 U	NS	15 U	15 U	7.6 J
Acetone	32	NS	22 J	490	480	19 J	NS	32	28 J	47
Benzene	6 U	NS	6 U	8 U	6 U	2.8 U	NS	3 U	3 U	3 U
Bromodichloromethane	6 U	NS	6 U	8 U	6 U	2.8 U	NS	3 U	3 U	3 U
Bromomethane	6 U	NS	6 U	8 U	6 U	2.8 U	NS	3 U	3 U	3 U
Carbon disulfide	93	NS	26	8 U	6 U	1.4 J	NS	47	62	14
Carbon tetrachloride	220 J	NS	220	11	28	12	NS	230	400	6.2
Chloroform	170 J	NS	200 J	15	21	110	NS	2,700	1,300	2,300
Chloromethane	6 U	NS	6 U	8 U	6 U	2.8 U	NS	3.3 J	5 J	5.3 J
cis-1,2-Dichloroethene	4 J	NS	67	8 U	6 U	2.8 U	NS	3.3 J	3.5 J	5.1 J
Methylcyclohexane	6 U	NS	6 U	8 U	6 U	2.8 U	NS	3 U	3 U	3 U
Methylene chloride	3 J	NS	4 JB	5 JB	4 J	14 U	NS	14 J	15 U	17 J
Tetrachloroethene	500	NS	200	8 U	4 J	3.5 J	NS	97	51	72
Toluene	15	NS	6 U	8 U	6 U	2.8 U	NS	4.6 J	3 U	5.6 J
trans-1,2-Dichloroethene	6 U	NS	3 J	8 U	6 U	2.8 U	NS	3 U	3 U	3 U
Trichloroethene	44	NS	72	8 U	6 U	2.8 U	NS	2.5 J	2.1 J	3.4 J
Total Metals (MG/KG)										
Aluminum	NS	8,030	NS	NS	NS	NS	3,880	NS	NS	NS
Antimony	NS	0.87 U	NS	NS	NS	NS	0.42 U	NS	NS	NS
Arsenic	NS	1.4	NS	NS	NS	NS	1.6	NS	NS	NS
Barium	NS	58	NS	NS	NS	NS	19.5	NS	NS	NS
Beryllium	NS	0.45 B	NS	NS	NS	NS	0.26 J	NS	NS	NS
Cadmium	NS	0.06 B	NS	NS	NS	NS	0.06 J	NS	NS	NS
Calcium	NS	382	NS	NS	NS	NS	114	NS	NS	NS
Chromium	NS	14.7	NS	NS	NS	NS	12.4	NS	NS	NS
Cobalt	NS	4	NS	NS	NS	NS	2.7	NS	NS	NS
Copper	NS	8.9	NS	NS	NS	NS	5.5	NS	NS	NS
Iron	NS	5,680	NS	NS	NS	NS	2,890	NS	NS	NS
Lead	NS	9.8	NS	NS	NS	NS	5.4	NS	NS	NS
MAGNESIUM	NS	615	NS	NS	NS	NS	590	NS	NS	NS
Manganese	NS	94.5	NS	NS	NS	NS	19.3	NS	NS	NS
Mercury	NS	0.03 B	NS	NS	NS	NS	0.05	NS	NS	NS
Nickel	NS	5.5	NS	NS	NS	NS	4.1	NS	NS	NS
Potassium	NS	668	NS	NS	NS	NS	566	NS	NS	NS
Selenium	NS	0.42 B	NS	NS	NS	NS	0.58 U	NS	NS	NS
Silver	NS	0.16 B	NS	NS	NS	NS	0.15 J	NS	NS	NS
Sodium	NS	49.2 B	NS	NS	NS	NS	327	NS	NS	NS
Thallium	NS	0.11 B	NS	NS	NS	NS	0.42 U	NS	NS	NS
Vanadium	NS	21.5	NS	NS	NS	NS	18.2	NS	NS	NS
Zinc	NS	11.3	NS	NS	NS	NS	10.4	NS	NS	NS
Wet Chemistry (UG/G)										
Total organic carbon (TOC)	NS	19,000	NS	NS	NS	NS	3,200	NS	NS	NS

Notes:
Shading indicates detection
B - Analyte not detected above the level reported in blanks
J - Analyte present. Value may or may not be accurate or precise
JB - NO MATCHING QUALIFIER DEFINITION FOUND IN LOOKUP LIST
NS - Not sampled

U - The material was analyzed for, but not detected
MG/KG - Milligrams per kilogram
UG/G - Micrograms per gram
UG/KG - Micrograms per kilogram

Appendix D
Additional Plan View Cross-sections and Three-dimensional Plume Maps

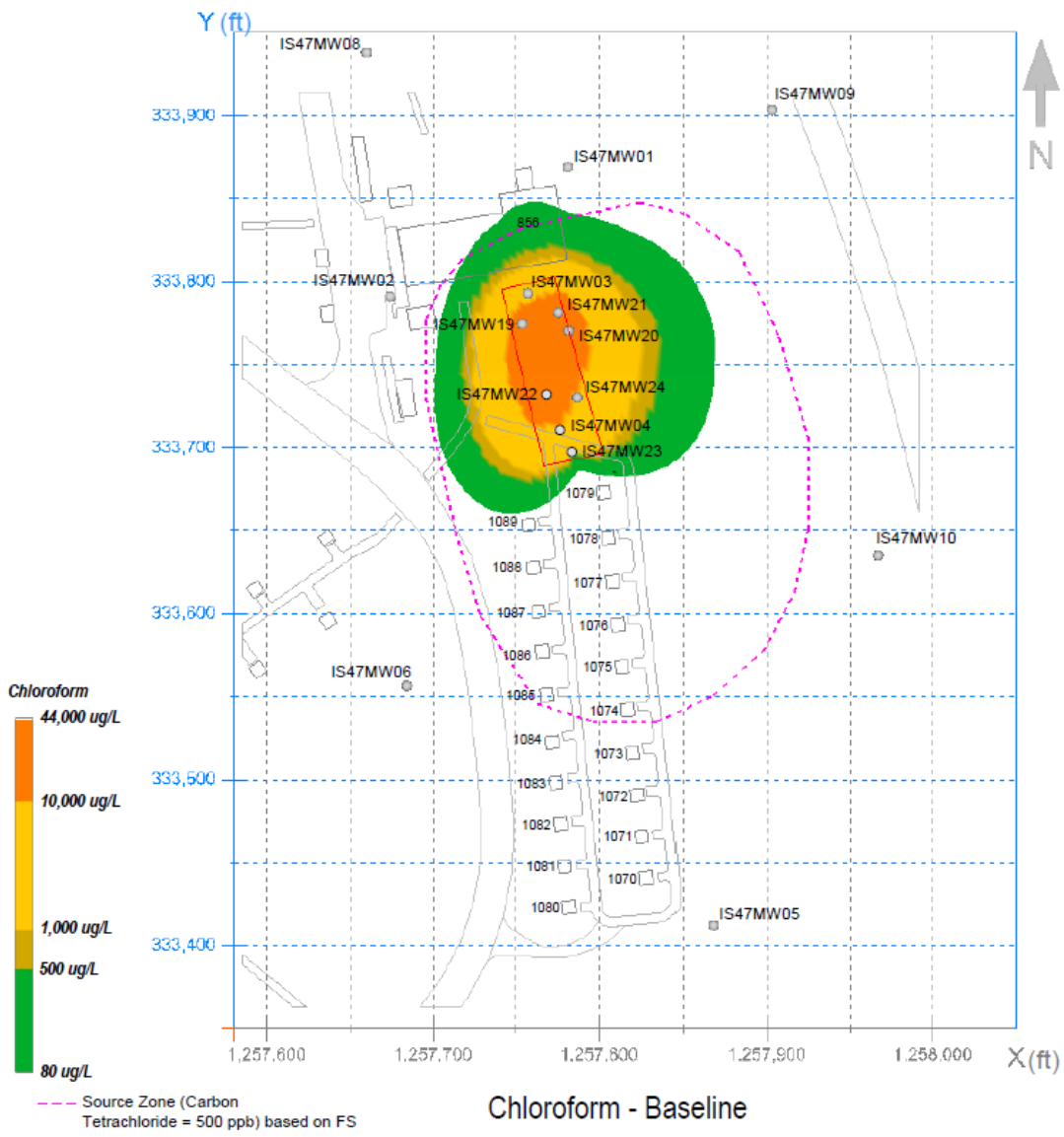

Chloroform - Baseline

NOTES:

1. The color scale shown is logarithmic, reflecting the pre-interpolation data processing.

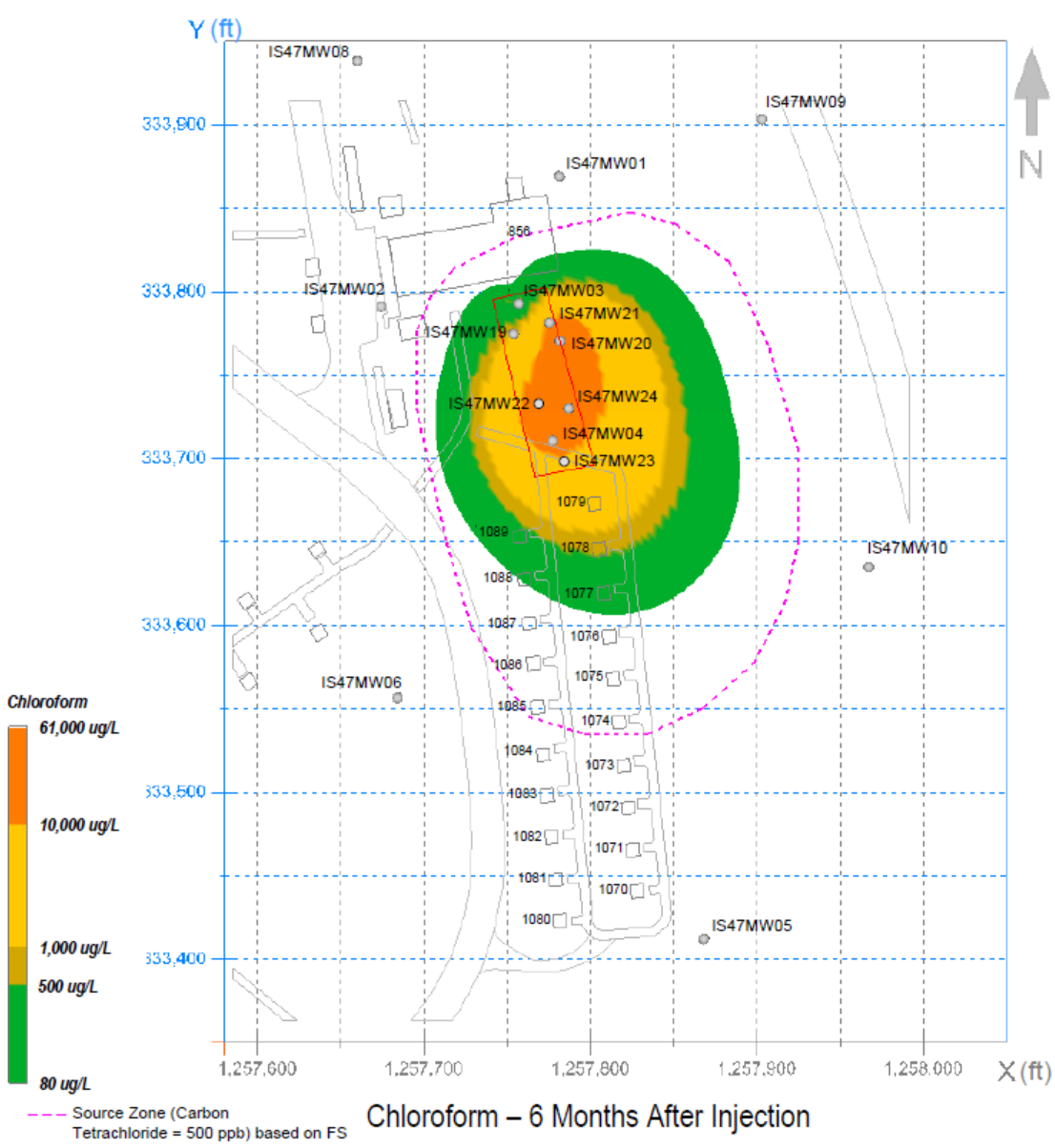

Chloroform – 6 Months After Injection

NOTES:

1. The color scale shown is logarithmic, reflecting the pre-interpolation data processing.

FIGURE D-1
2-Dimensional CF Plumes – Before and 6-Month Post Injection
Site 47 ISCO Pilot Study Technology Performance Evaluation
NSF-IH, Indian Head, Maryland

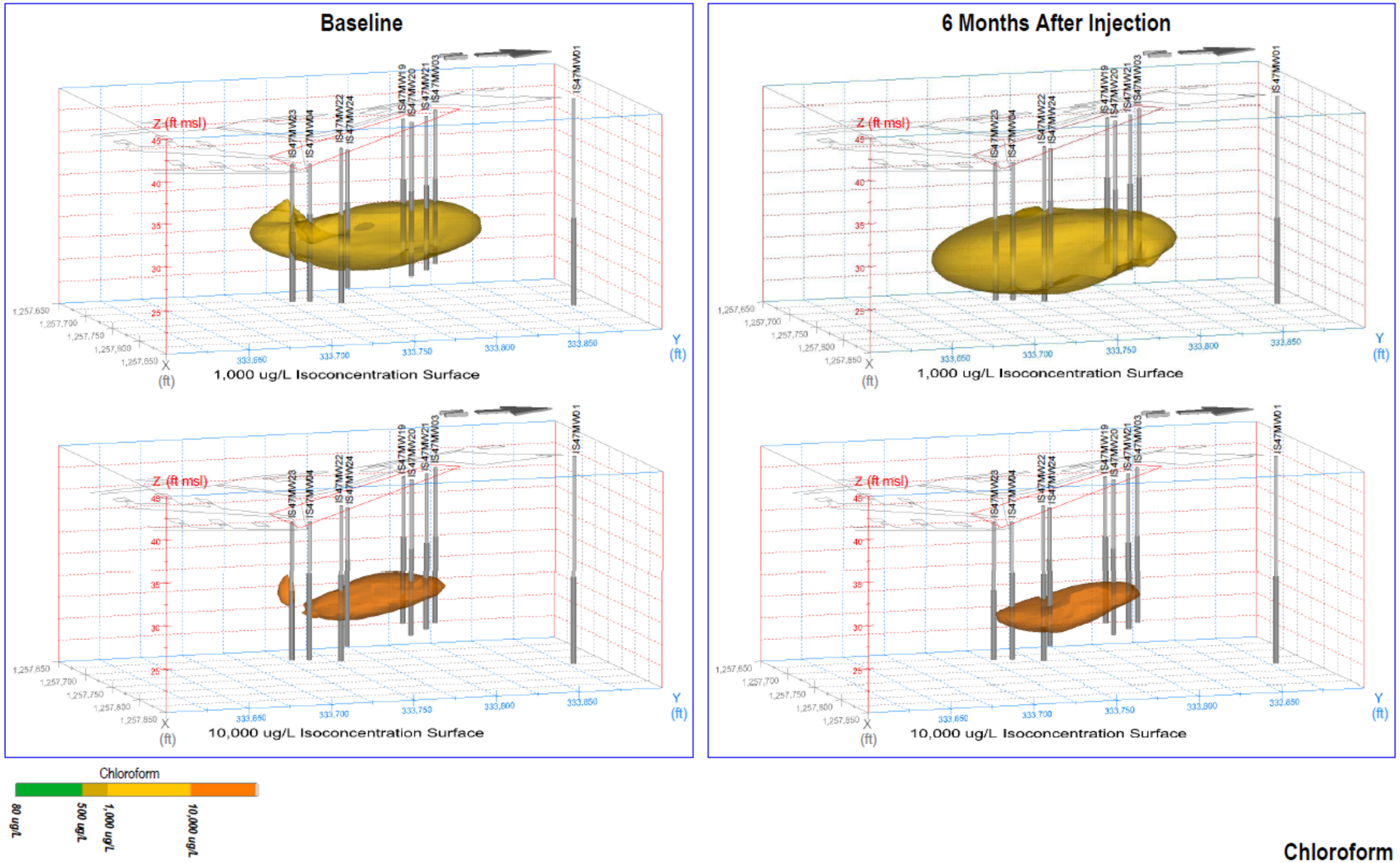

FIGURE D-2
3-Dimensional CF Plumes – Before and 6-Month Post Injection
Site 47 ISCO Pilot Study Technology Performance Evaluation
NSF-IH, Indian Head, Maryland

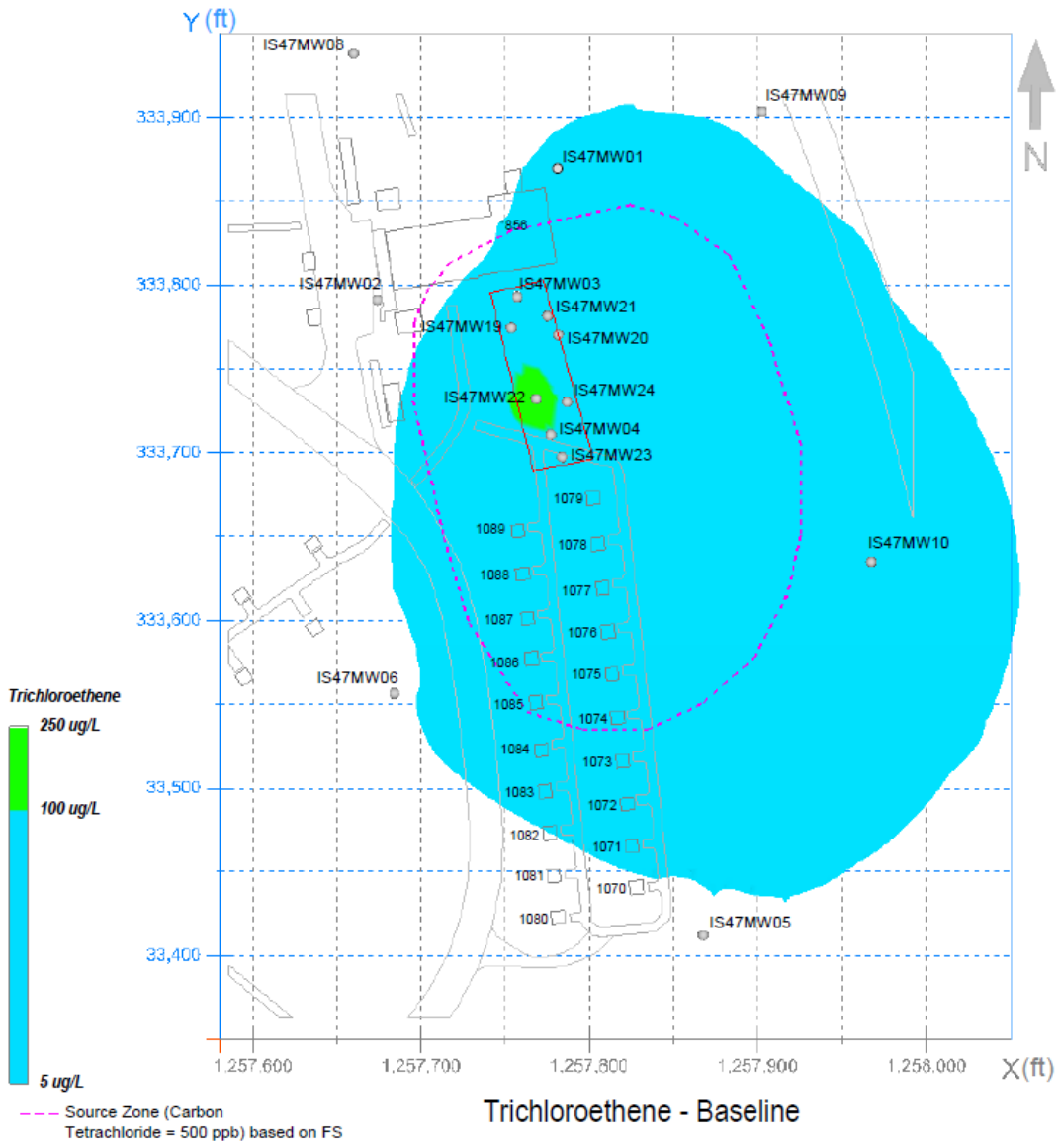

Trichloroethene - Baseline

NOTES:

1. The 5 ug/L isoconcentration level shown is based on the 5 ug/L isoconcentration contour for trichloroethene depicted on Figure 2-4 of the Site 47 Feasibility Study.

2. The color scale shown is logarithmic, reflecting the pre-interpolation data processing.

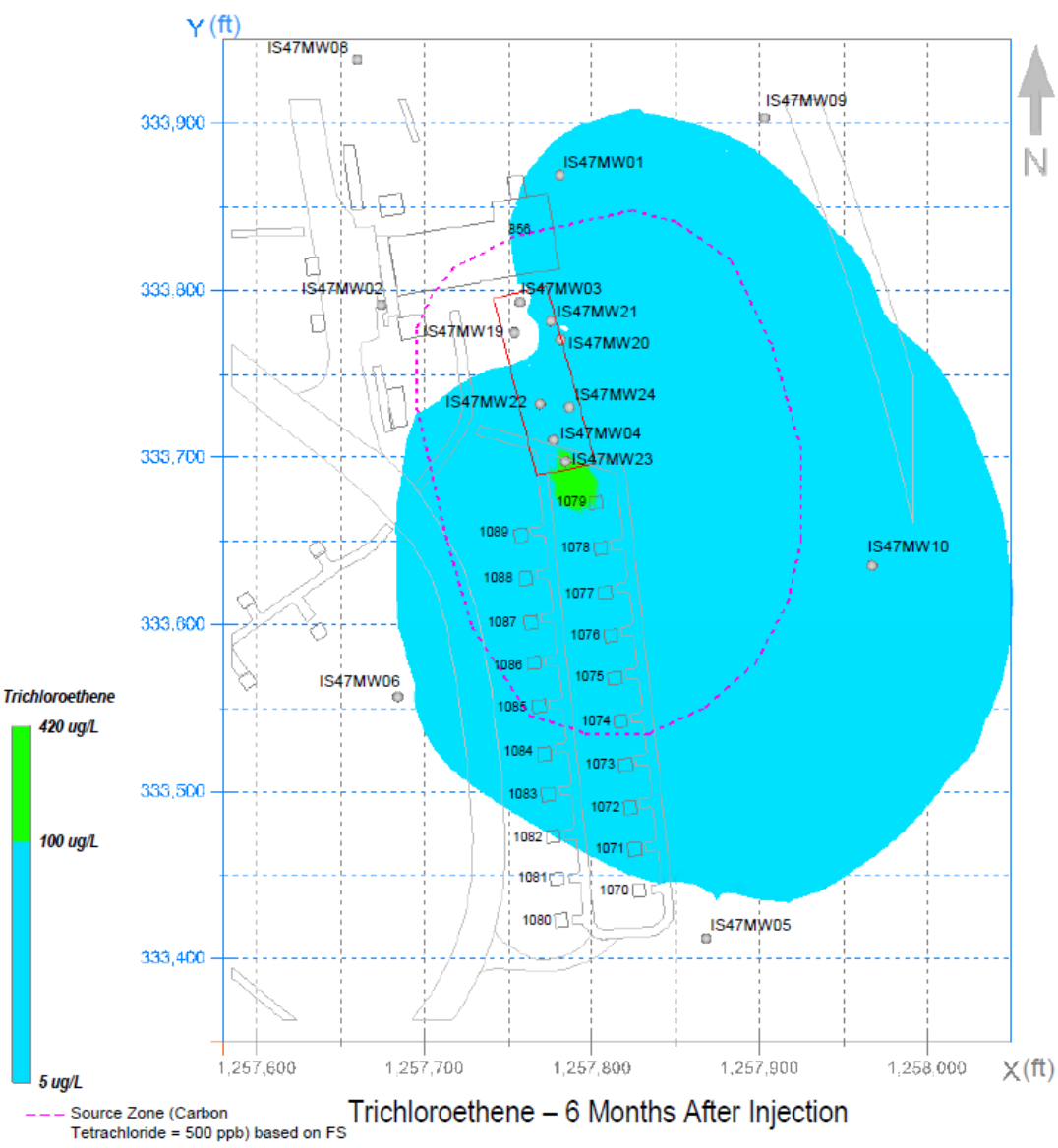

Trichloroethene – 6 Months After Injection

NOTES:

1. The 5 ug/L isoconcentration level shown has been modified from the 5 ug/L isoconcentration contour for trichloroethene depicted on Figure 2-4 of the Site 47 Feasibility Study.

2. The color scale shown is logarithmic, reflecting the pre-interpolation data processing.

FIGURE D-3
2-Dimensional TCE Plumes – Before and 6-Month Post Injection
Site 47 ISCO Pilot Study Technology Performance Evaluation
NSF-IH, Indian Head, Maryland

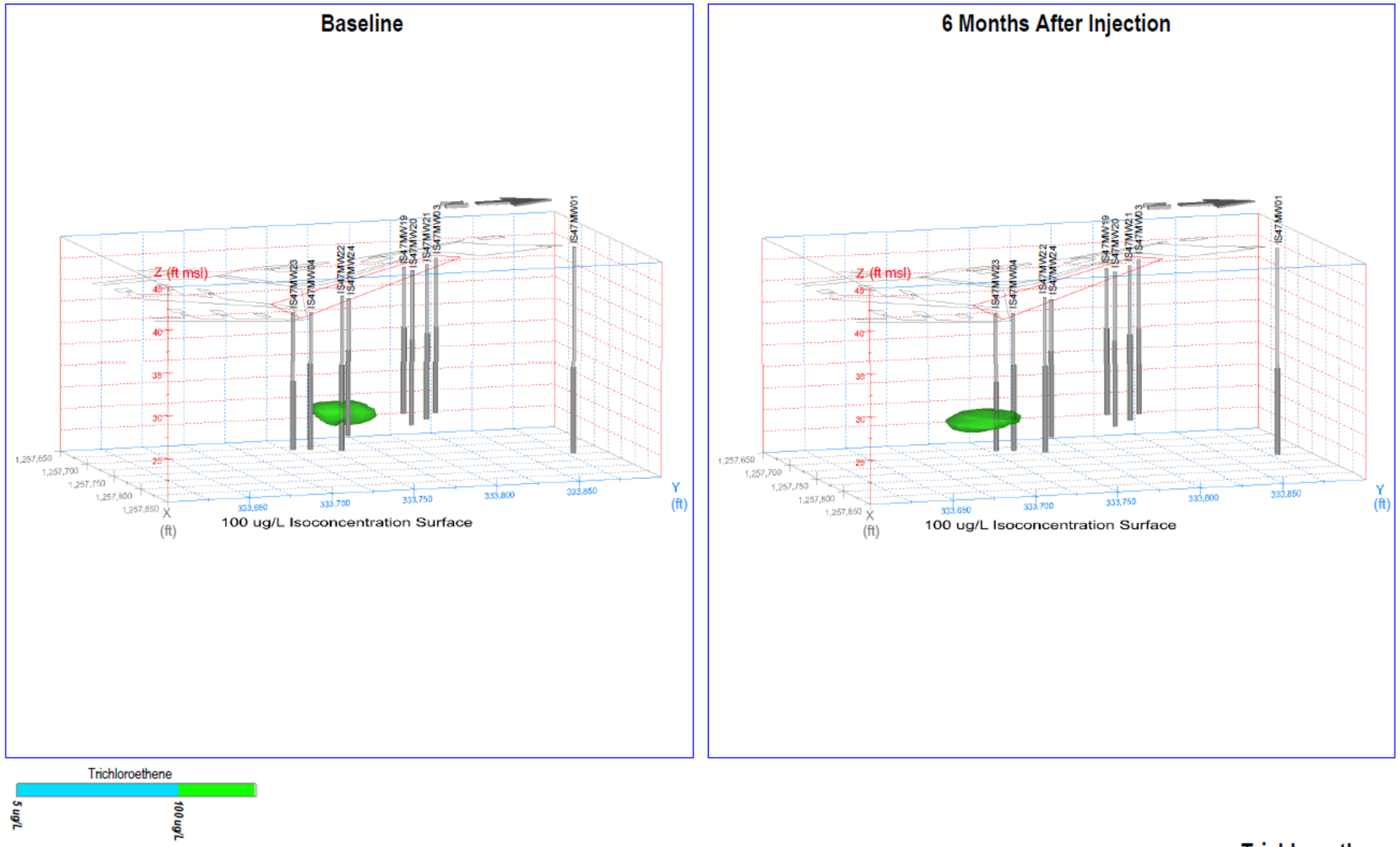

Trichloroethene

FIGURE D-4
3-Dimensional TCE Plumes – Before and 6-Month Post Injection
Site 47 ISCO Pilot Study Technology Performance Evaluation
NSF-IH, Indian Head, Maryland

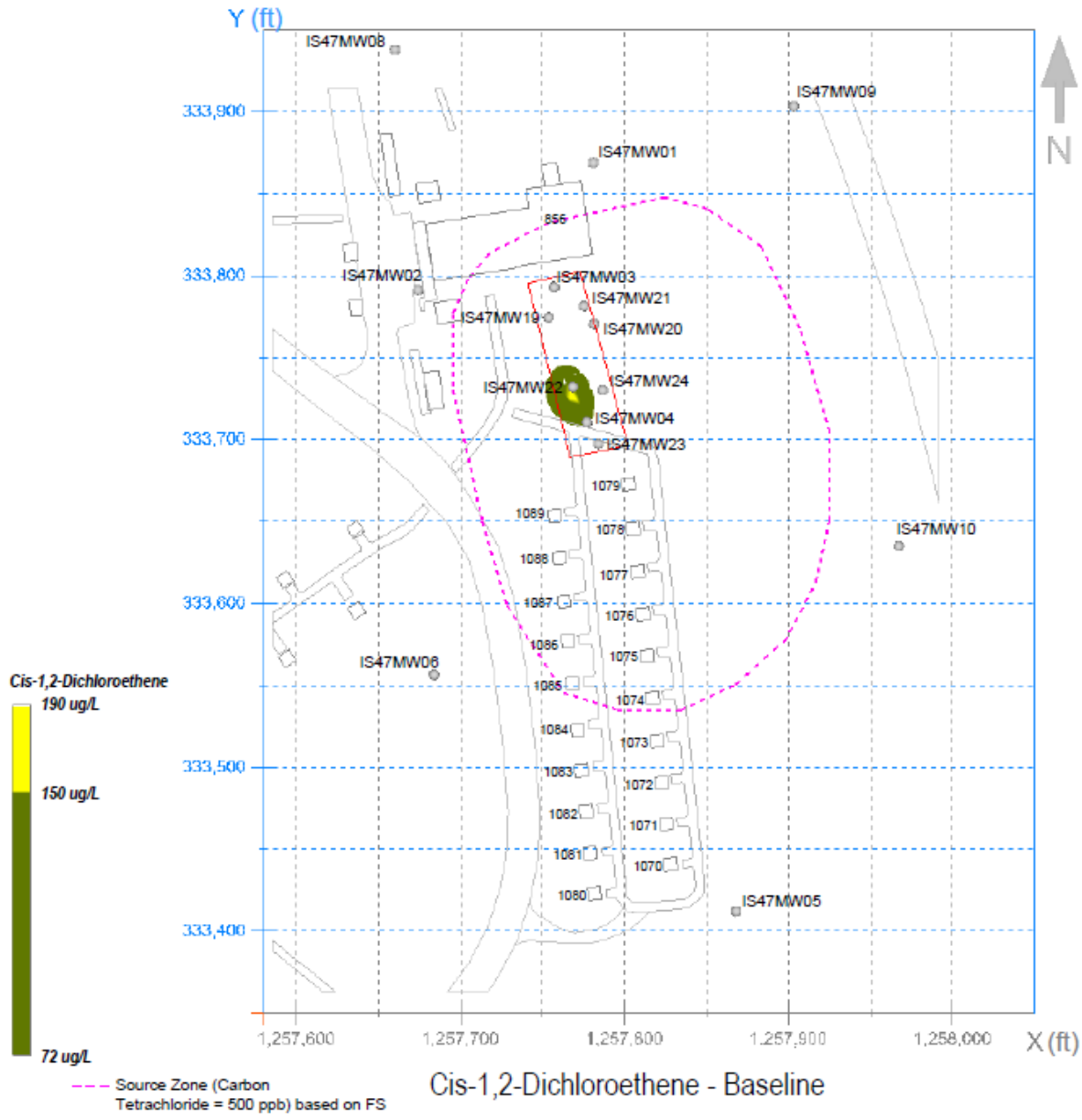

Cis-1,2-Dichloroethene - Baseline

NOTES:

1. The color scale shown is logarithmic, reflecting the pre-interpolation data processing.

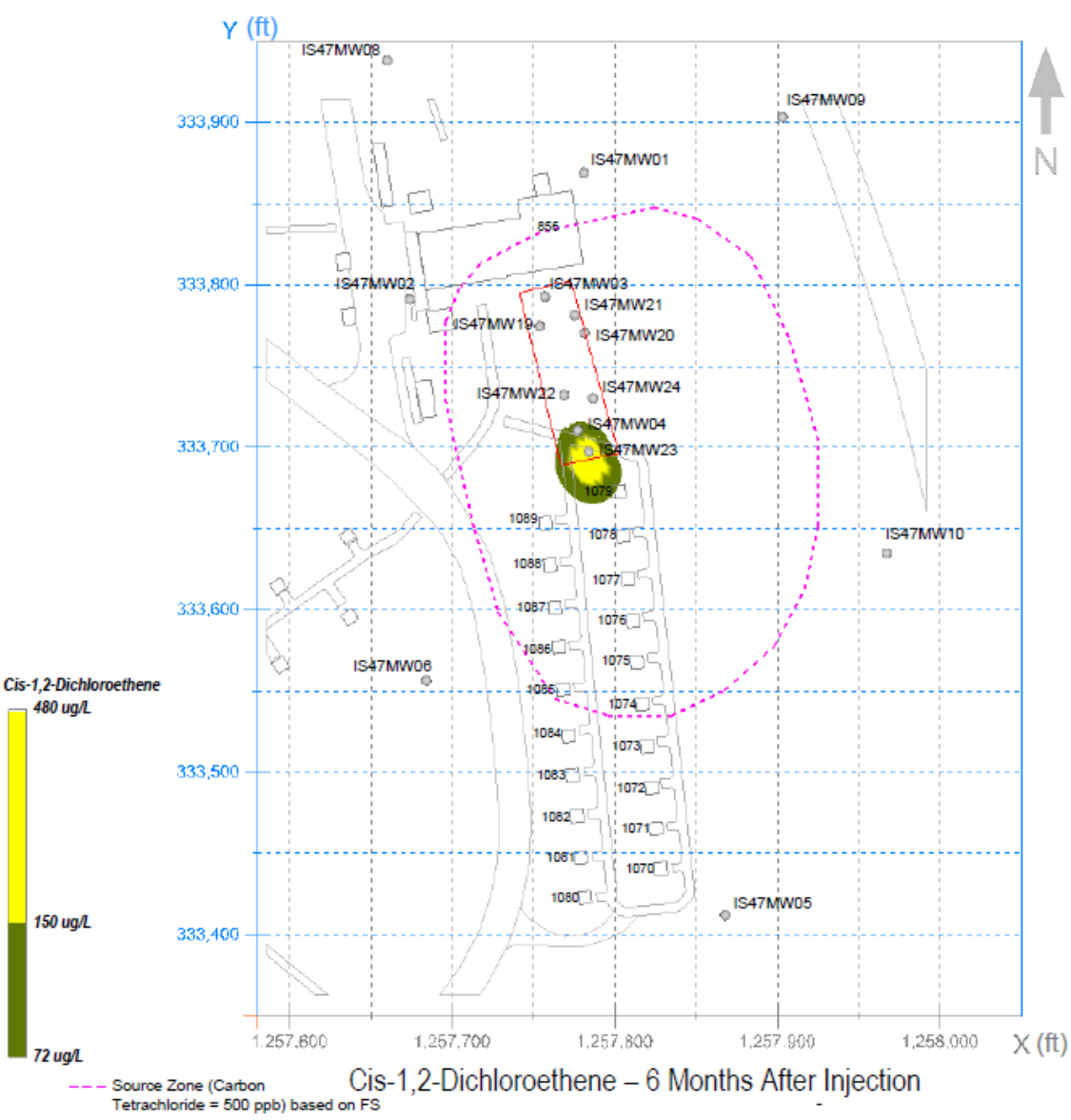

Cis-1,2-Dichloroethene – 6 Months After Injection

NOTES:

1. The color scale shown is logarithmic, reflecting the pre-interpolation data processing.

FIGURE D-5
2-Dimensional cis-1,2-DCE Plumes – Before and 6-Month Post Injection
Site 47 ISCO Pilot Study Technology Performance Evaluation
NSF-IH, Indian Head, Maryland

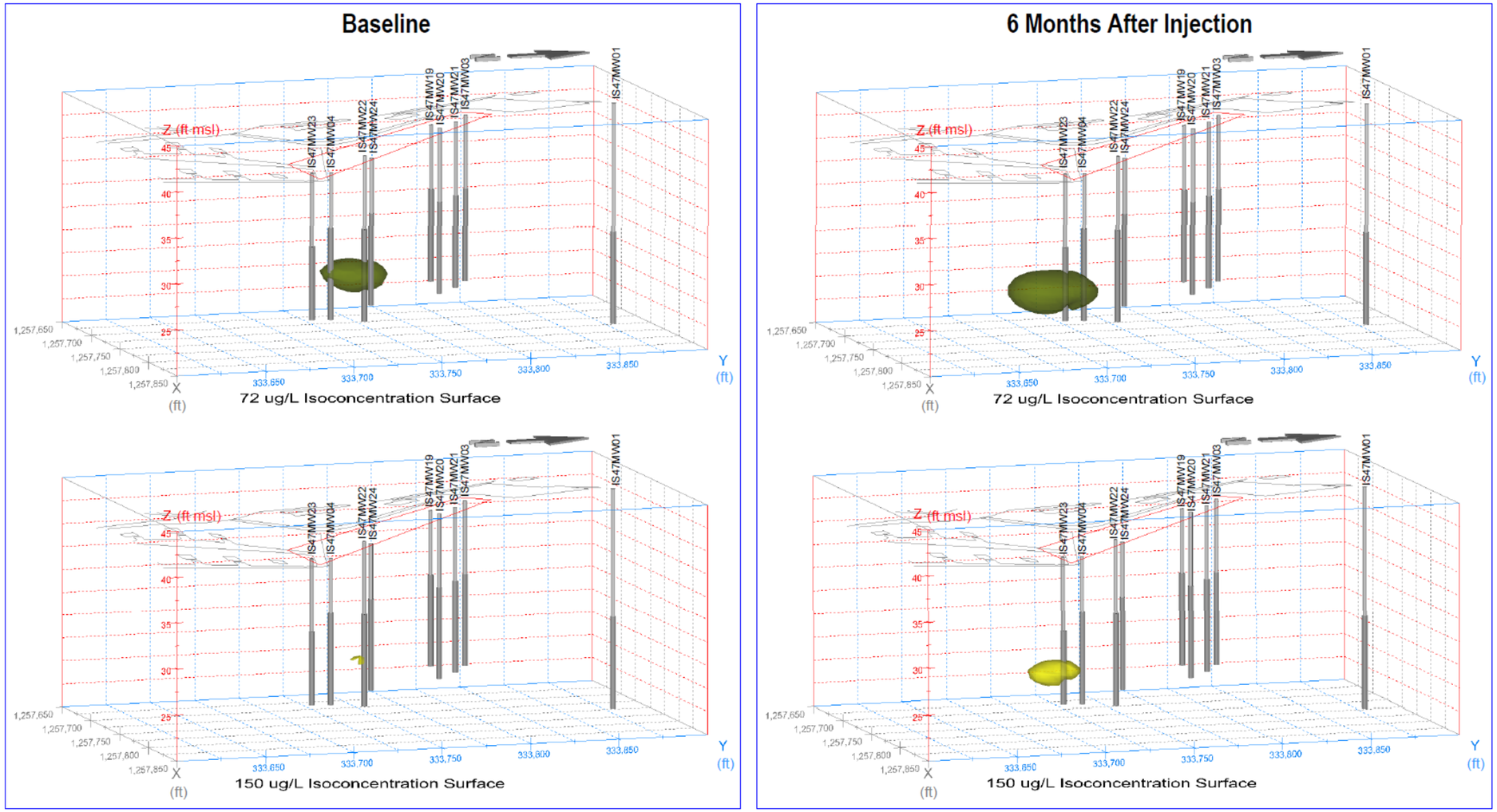

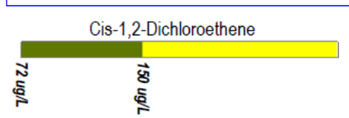

Cis-1,2-Dichloroethene

FIGURE D-6
3-Dimensional cis-1,2-DCE Plumes – Before and 6-Month Post Injection
Site 47 ISCO Pilot Study Technology Performance Evaluation
NSF-IH, Indian Head, Maryland

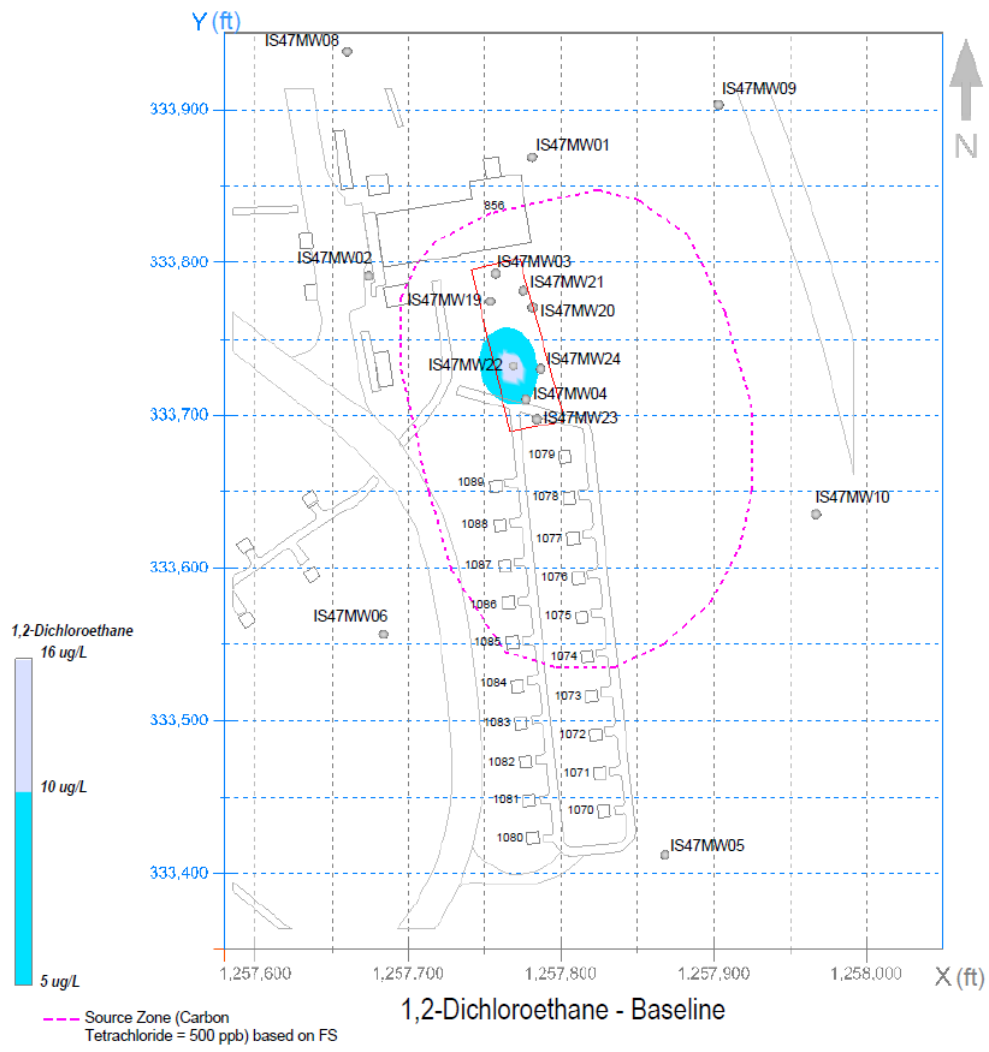

1,2-Dichloroethane - Baseline

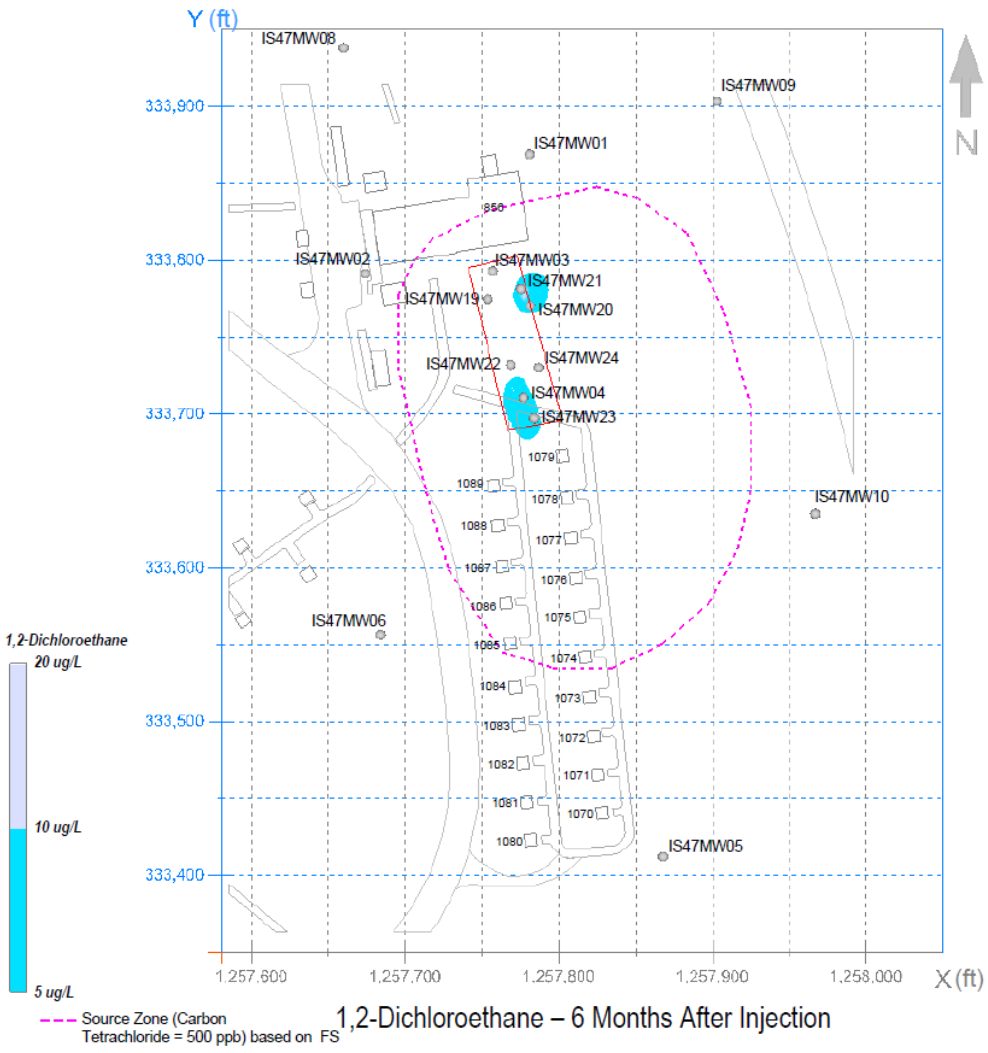

1,2-Dichloroethane – 6 Months After Injection

NOTE:

1. The color scale shown is logarithmic, reflecting the pre-interpolation data processing.

FIGURE D-7
2-Dimensional 1,2-DCA Plumes – Before and 6-Month Post Injection
Site 47 ISCO Pilot Study Technology Performance Evaluation
NSF-IH, Indian Head, Maryland

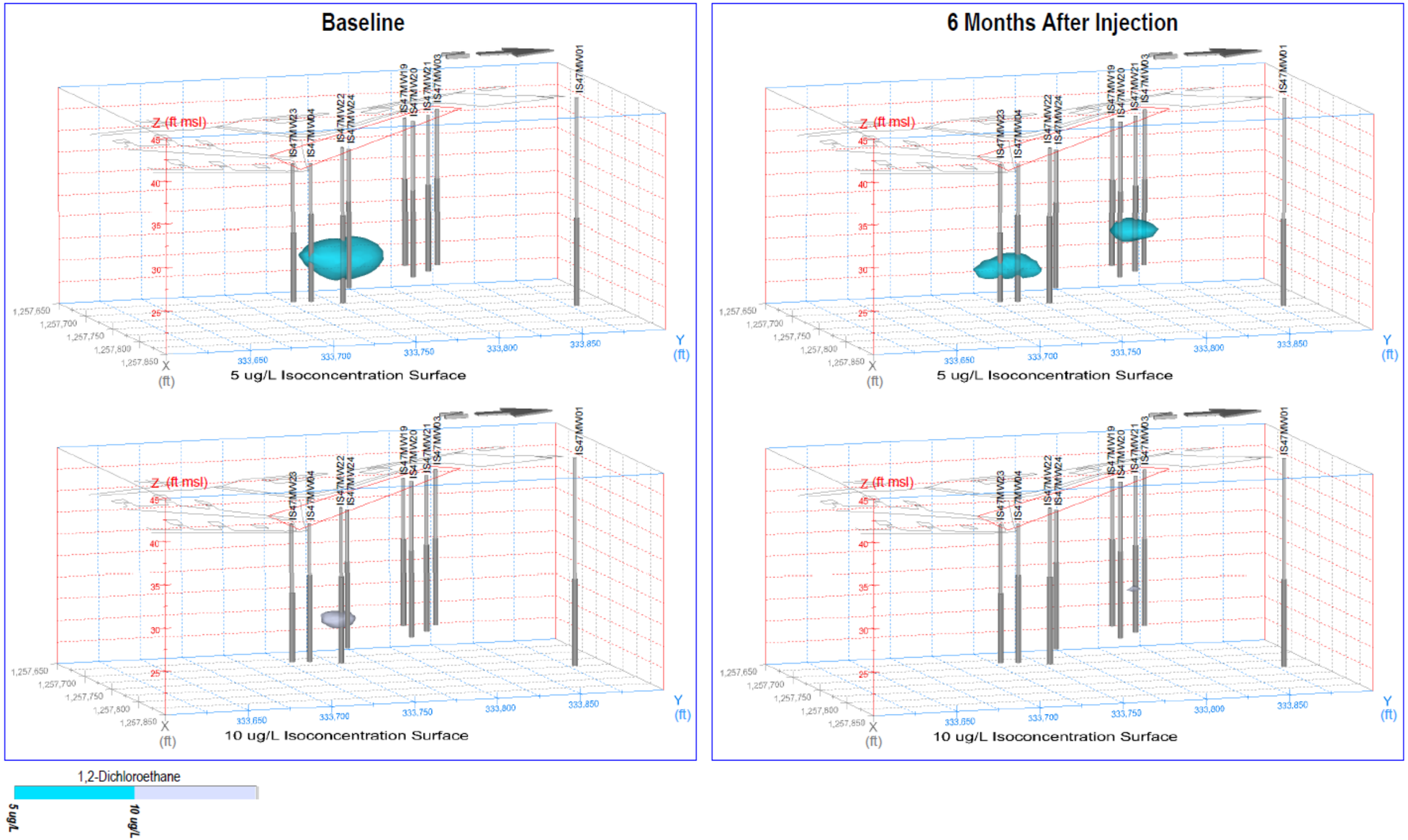

FIGURE D-8
3-Dimensional 1,2-DCA Plumes – Before and 6-Month Post Injection
Site 47 ISCO Pilot Study Technology Performance Evaluation
NSF-IH, Indian Head, Maryland

Appendix E
Electrical Conductivity Profiling Results

VIRONEX
4961 Telsa Drive
Suite E
Bowie, MD 20715
P: 301-352-6642
F: 301-352-6643
www.vironex.com

Boring Name: EC09

Total Depth (ft): 20.45

Notes:
None

GW Depth (ft): 10'
Depth of GW Provided by Client

Job Information		EC Sampling Information			
Client Company:	CH2M Hill	Trunkline Length:	90'	Start Boring Time:	July 8, 2010 - 08:30
Project Name:	NSF Indian Head	Probe Type:	Wenner Probe 500	End Boring Time:	July 8, 2010 - 08:42
Site Address:	101 Strauss Ave, Indian Head MD	Rig Type:	Geoprobe 66DT	EC Specialist:	David Wiley

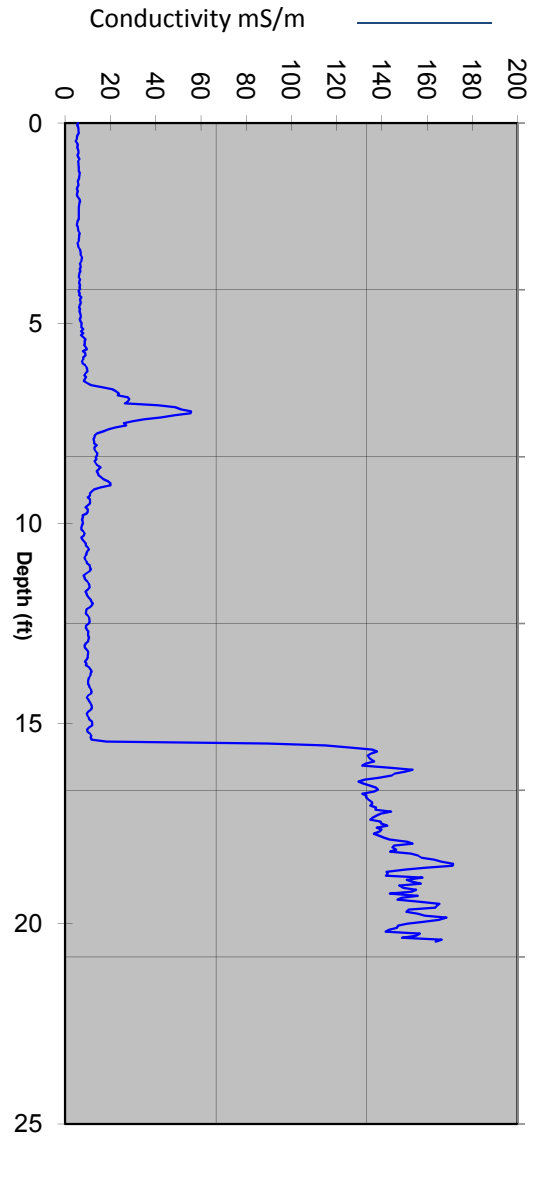

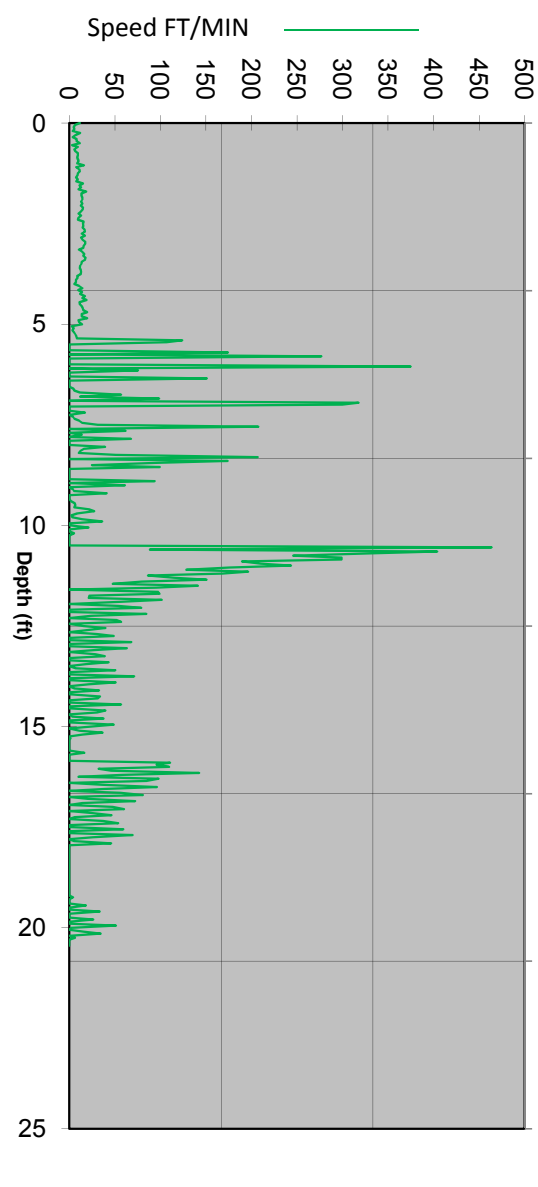

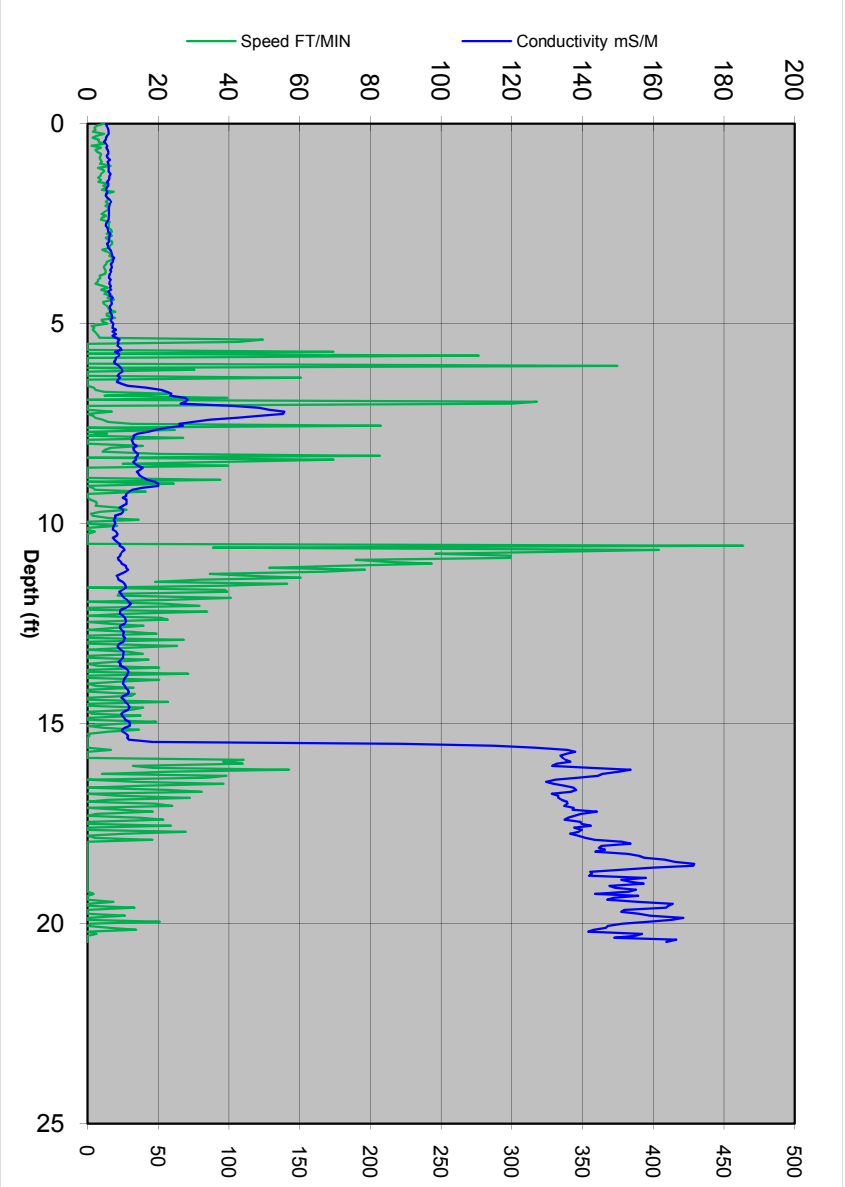

VIRONEX
4961 Telsa Drive
Suite E
Bowie, MD 20715
P: 301-352-6642
F: 301-352-6643
www.vironex.com

Boring Name: EC08

Total Depth (ft): 19.95

Notes:
None

GW Depth (ft): 10'
Depth of GW Provided by Client

Job Information		EC Sampling Information			
Client Company:	CH2M Hill	Trunkline Length:	90'	Start Boring Time:	July 8, 2010 - 11:15
Project Name:	NSF Indian Head	Probe Type:	Wenner Probe 500	End Boring Time:	July 8, 2010 - 11:35
Site Address:	101 Strauss Ave, Indian Head MD	Rig Type:	Geoprobe 66DT	EC Specialist:	David Wiley

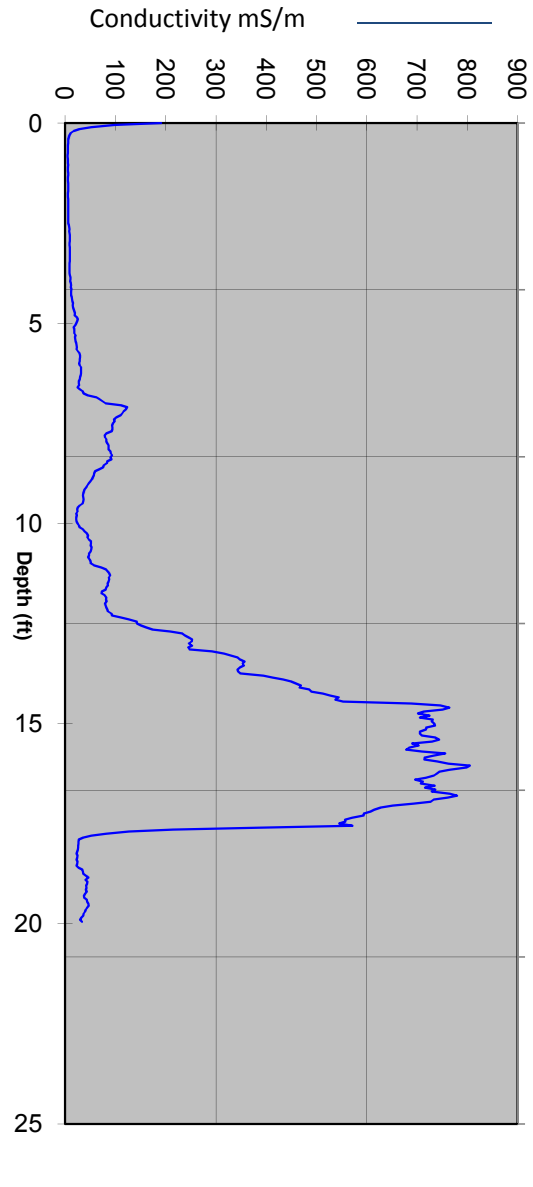

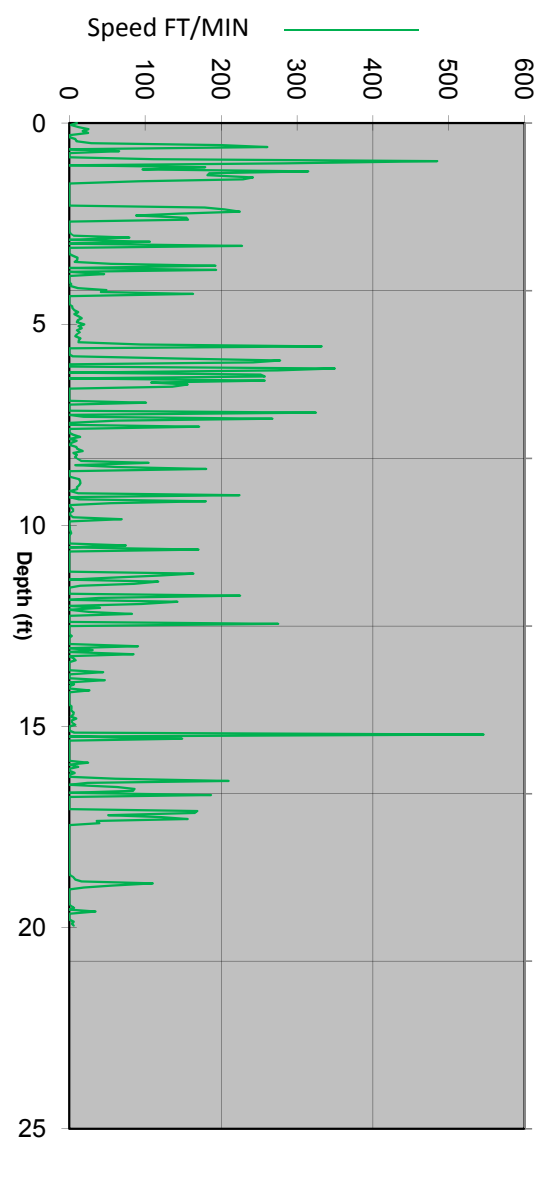

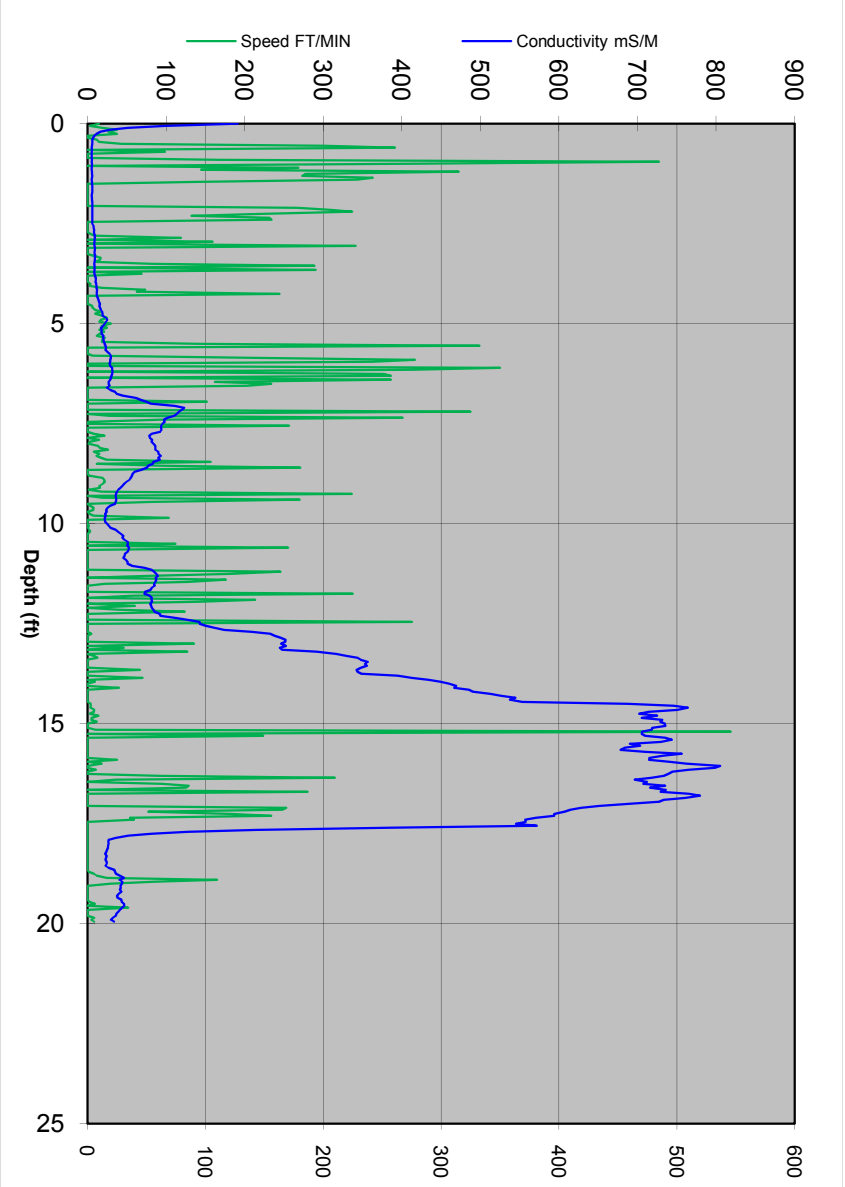

VIRONEX
4961 Telsa Drive
Suite E
Bowie, MD 20715
P: 301-352-6642
F: 301-352-6643
www.vironex.com

Boring Name: EC07

Total Depth (ft): 20.1

Notes:
None

GW Depth (ft): 10
Depth of GW Provided by Client

Job Information		EC Sampling Information			
Client Company:	CH2M Hill	Trunkline Length:	90'	Start Boring Time:	
Project Name:	NSF Indian Head	Probe Type:	Wenner Probe 500	End Boring Time:	
Site Address:	101 Strauss Ave, Indian Head MD	Rig Type:	Geoprobe 66DT	EC Specialist:	David Wiley

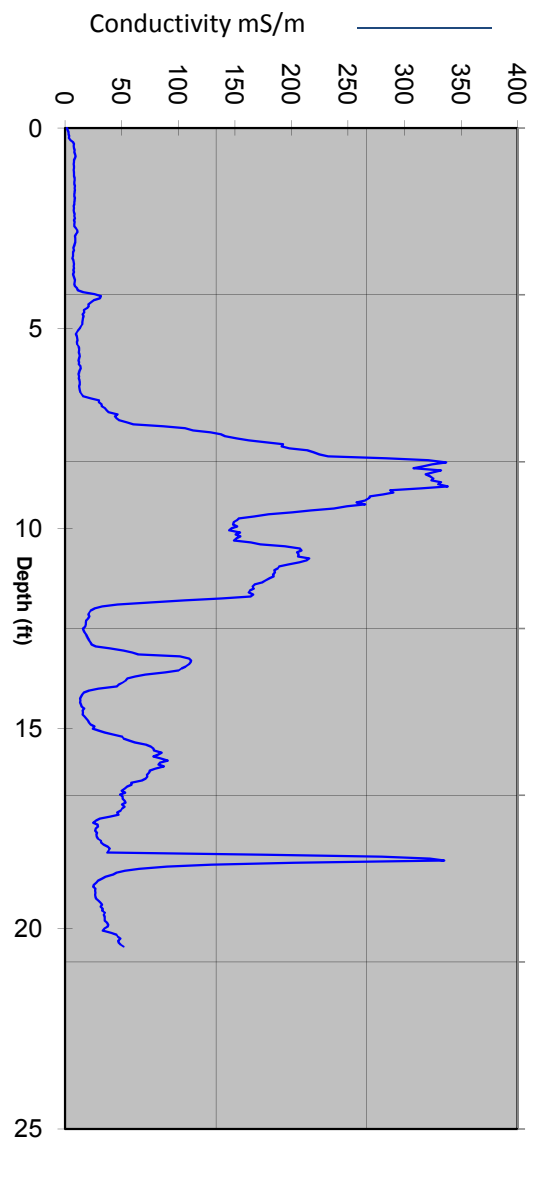

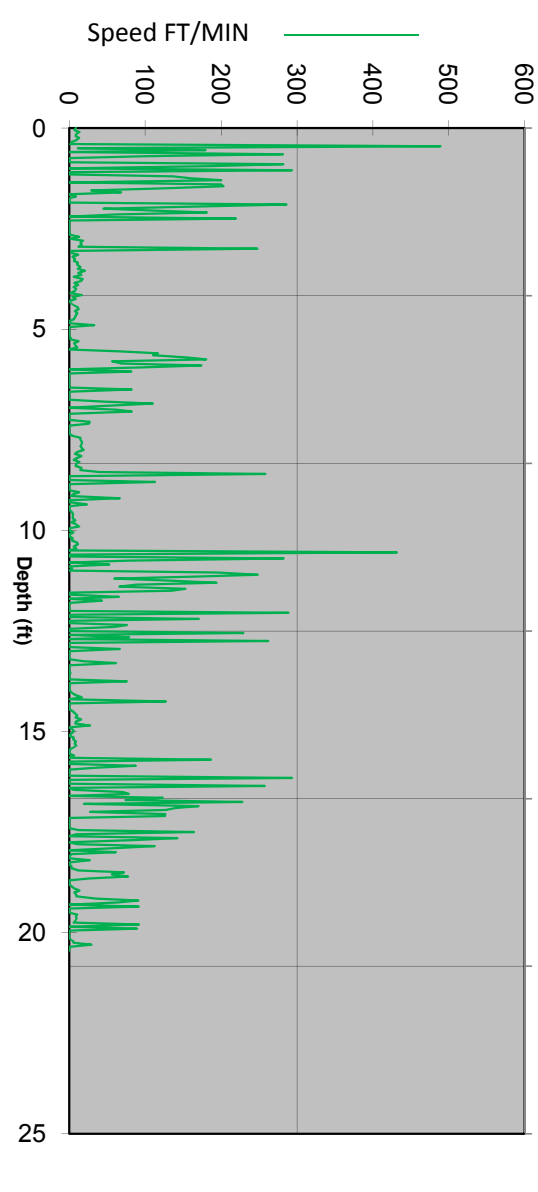

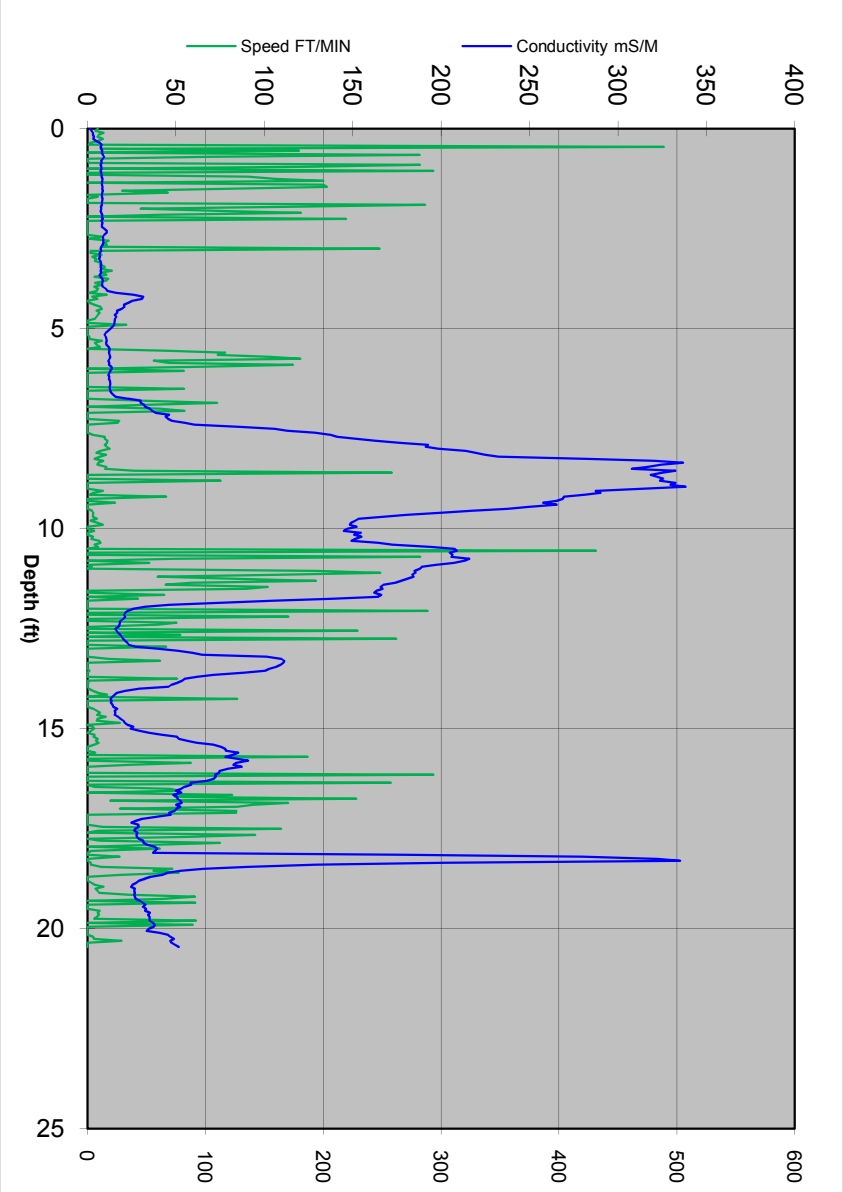

VIRONEX
4961 Telsa Drive
Suite E
Bowie, MD 20715
P: 301-352-6642
F: 301-352-6643
www.vironex.com

Boring Name: EC11

Total Depth (ft): 20.4

Notes:
None

GW Depth (ft): 10'
Depth of GW Provided by Client

Job Information		EC Sampling Information			
Client Company:	CH2M Hill	Trunkline Length:	90'	Start Boring Time:	July 8, 2010 - 12:05
Project Name:	NSF Indian Head	Probe Type:	Wenner Probe 500	End Boring Time:	July 8, 2010 - 12:13
Site Address:	101 Strausse Ave, Indian Head MD	Rig Type:	Geoprobe 66DT	EC Specialist:	David Wiley

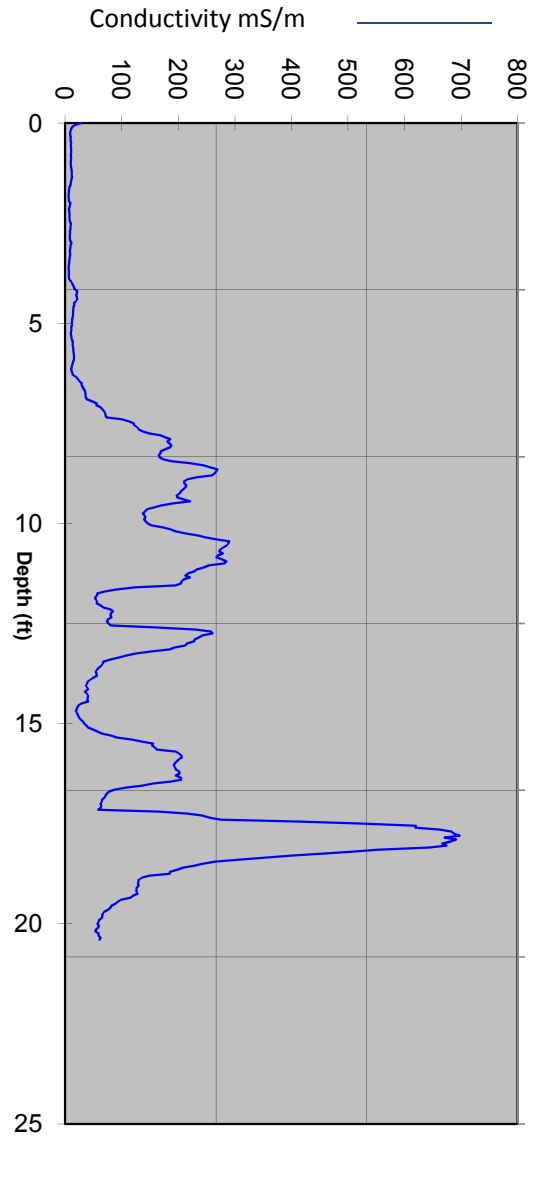

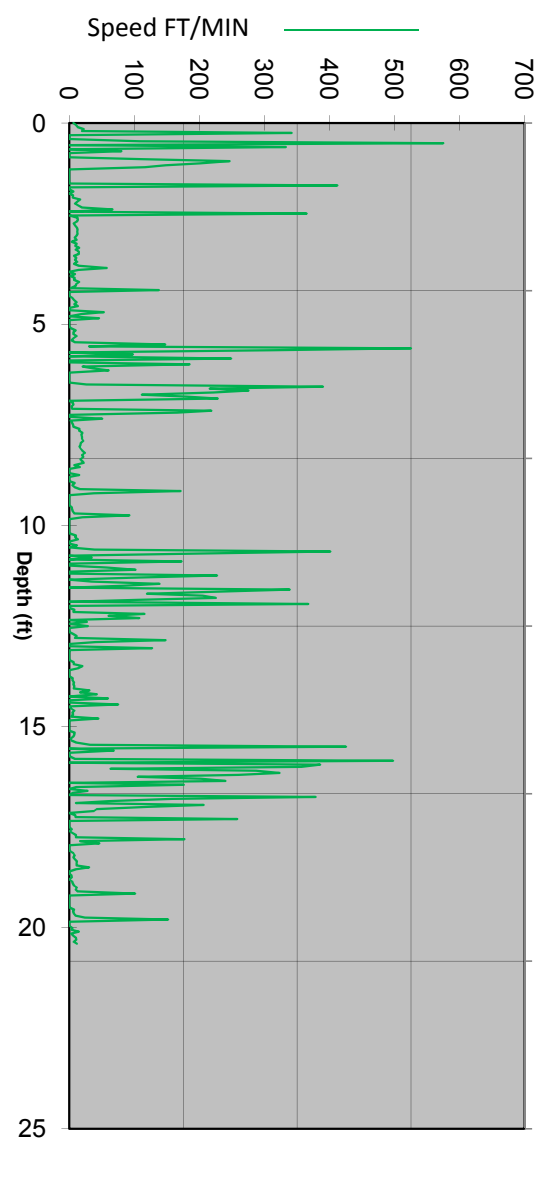

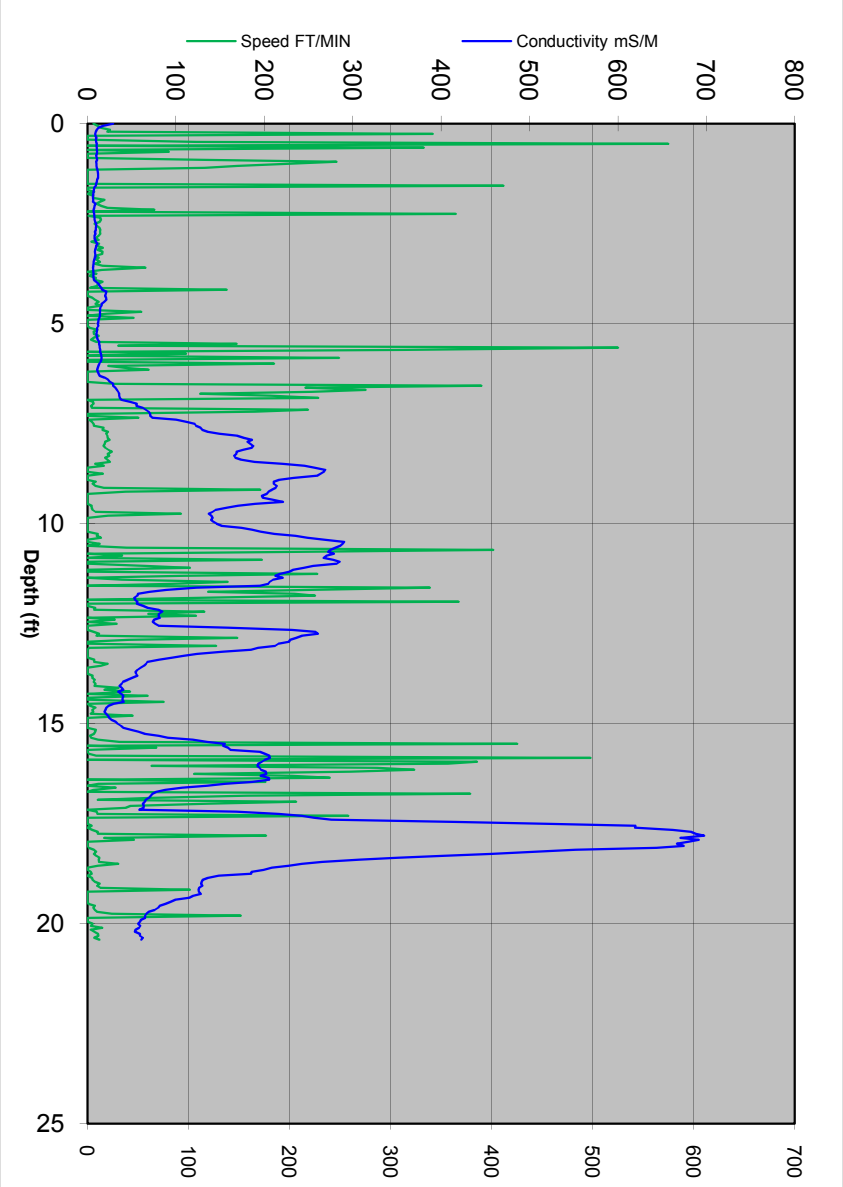

VIRONEX
4961 Telsa Drive
Suite E
Bowie, MD 20715
P: 301-352-6642
F: 301-352-6643
www.vironex.com

Boring Name: EC10

Total Depth (ft): 20.45

Notes:
None

GW Depth (ft): 10'
Depth of GW Provided by Client

Job Information		EC Sampling Information			
Client Company:	CH2M Hill	Trunkline Length:	90'	Start Boring Time:	July 8, 2010 - 11:54
Project Name:	NSF Indian Head	Probe Type:	Wenner Probe 500	End Boring Time:	July 8, 2010 - 12:03
Site Address:	101 Strauss Ave, Indian Head	Rig Type:	Geoprobe 66DT	EC Specialist:	David Wiley

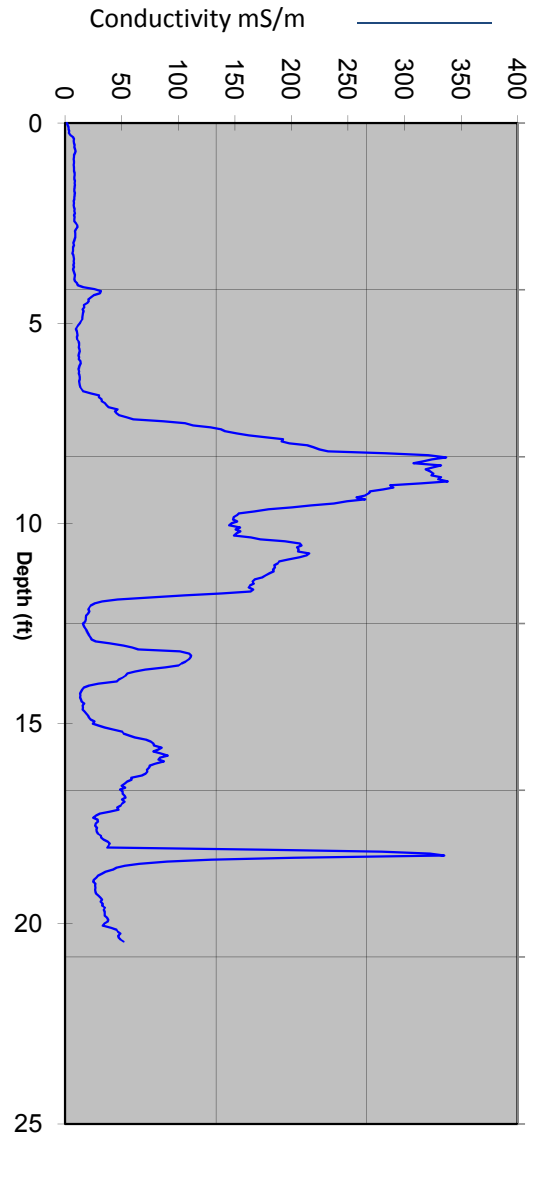

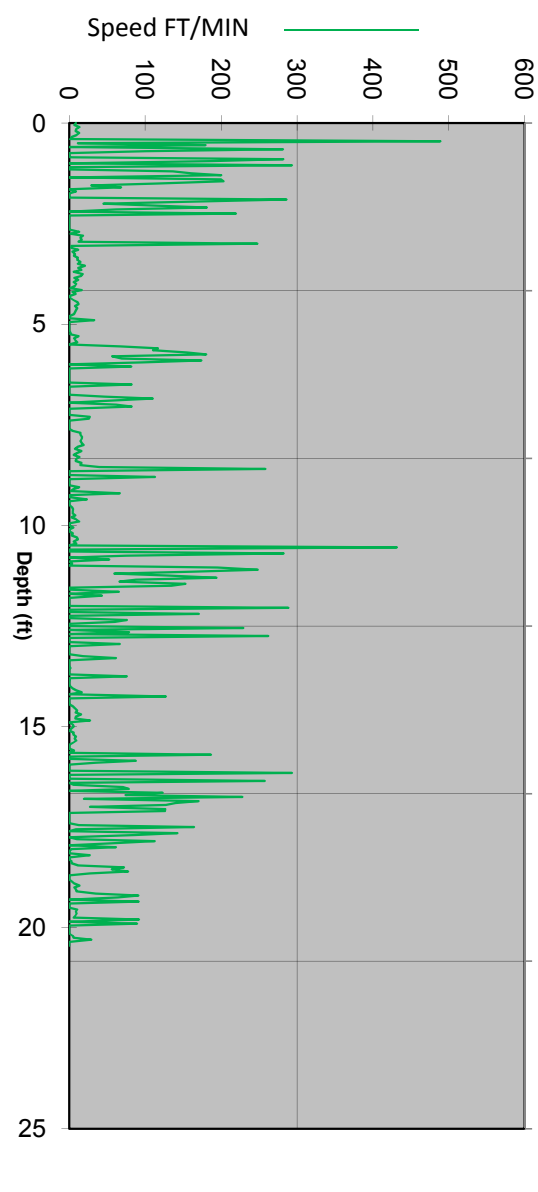

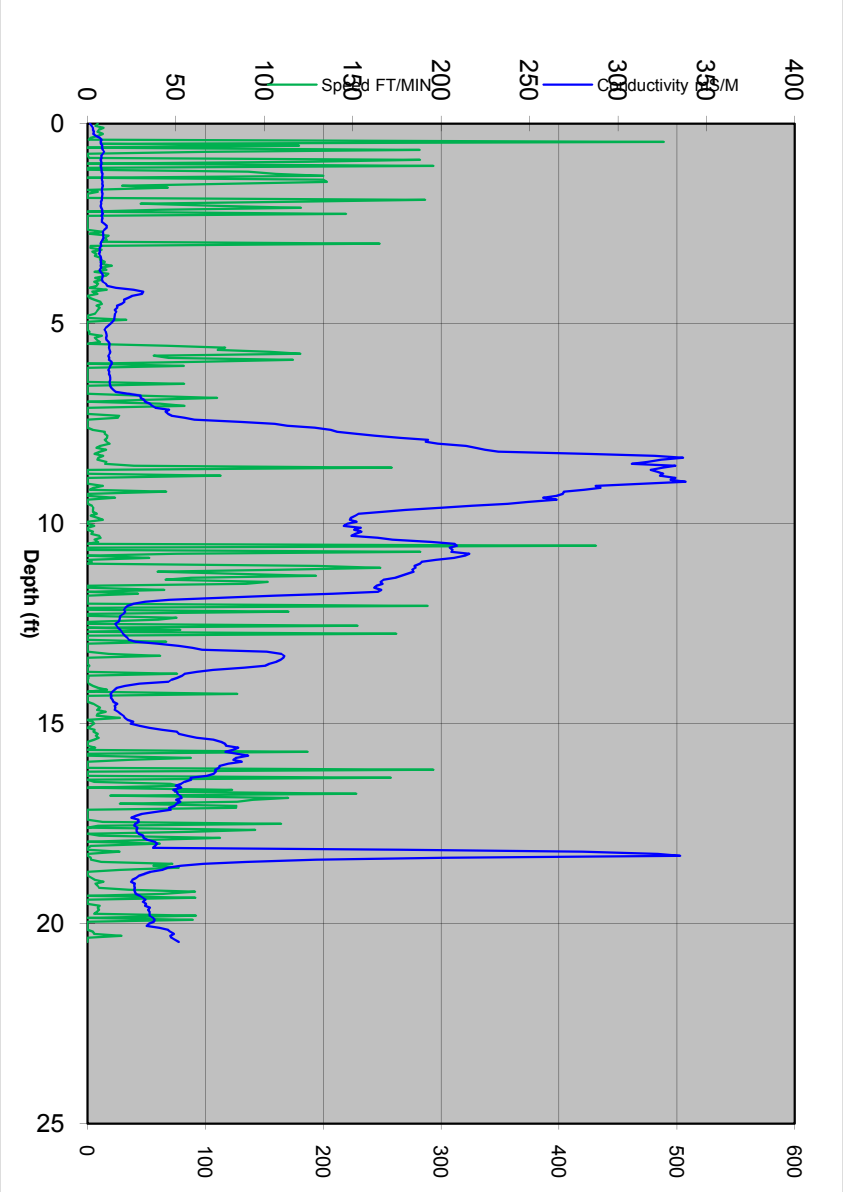

VIRONEX
4961 Telsa Drive
Suite E
Bowie, MD 20715
P: 301-352-6642
F: 301-352-6643
www.vironex.com

Boring Name: EC12

Total Depth (ft): 22.6

Notes:
None

GW Depth (ft): 10'
Depth of GW Provided by Client

Job Information		EC Sampling Information			
Client Company:	CH2M Hill	Trunkline Length:	90'	Start Boring Time:	July 8, 2010 - 08:30
Project Name:	NSF Indian Head	Probe Type:	Wenner Probe 500	End Boring Time:	July 8, 2010 - 08:42
Site Address:	101 Strauss Ave, Indian Head MD	Rig Type:	Geoprobe 66DT	EC Specialist:	David Wiley

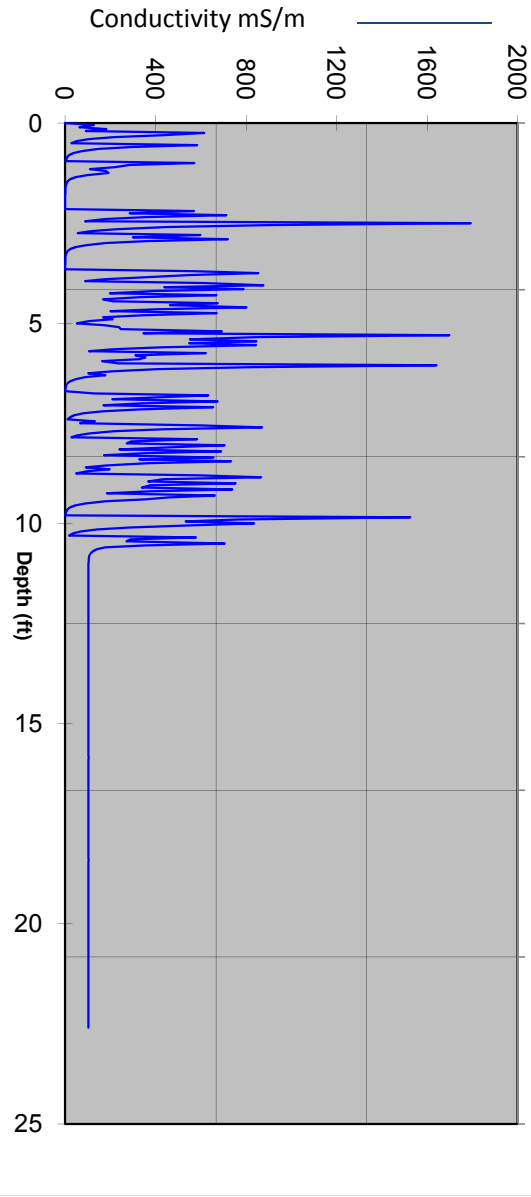

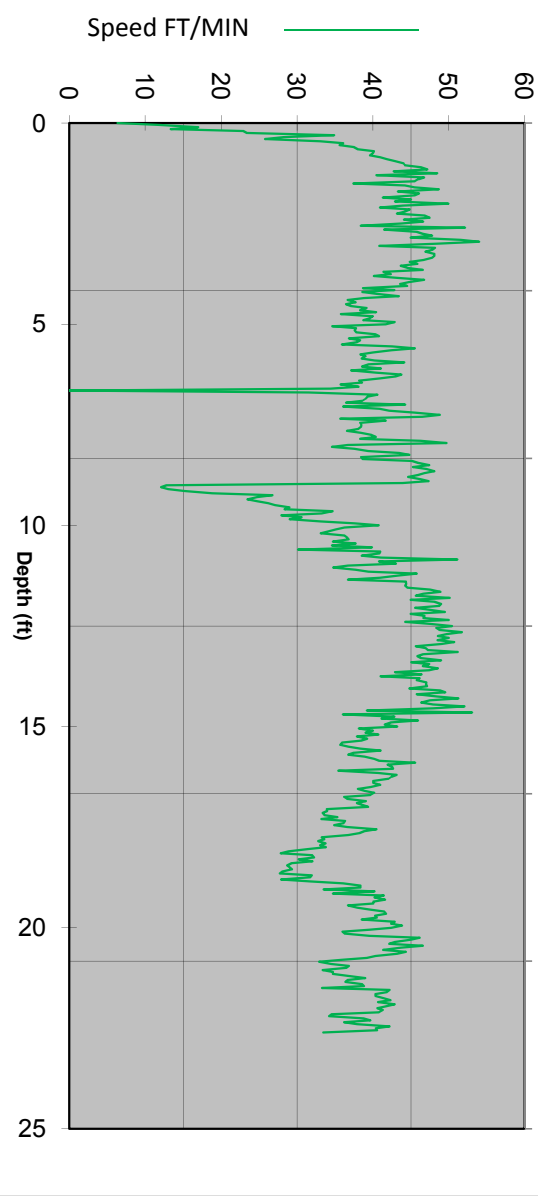

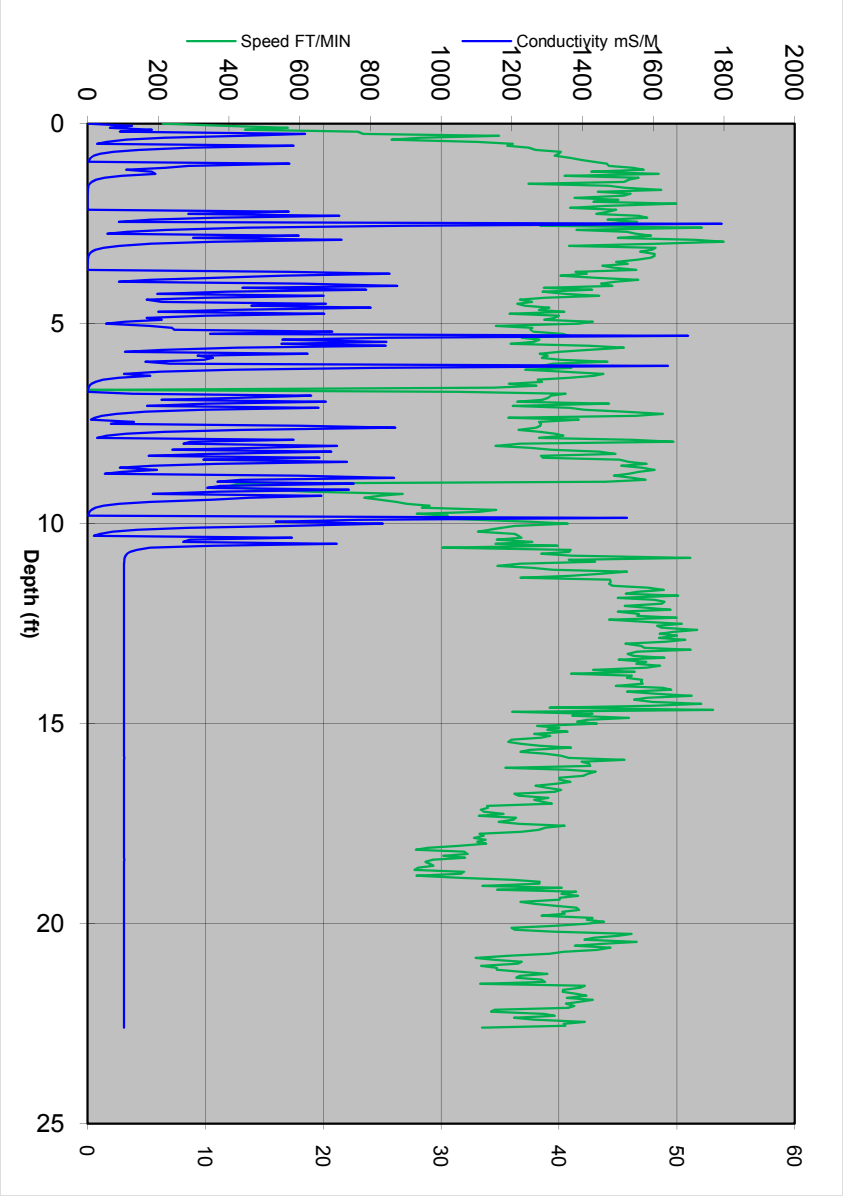

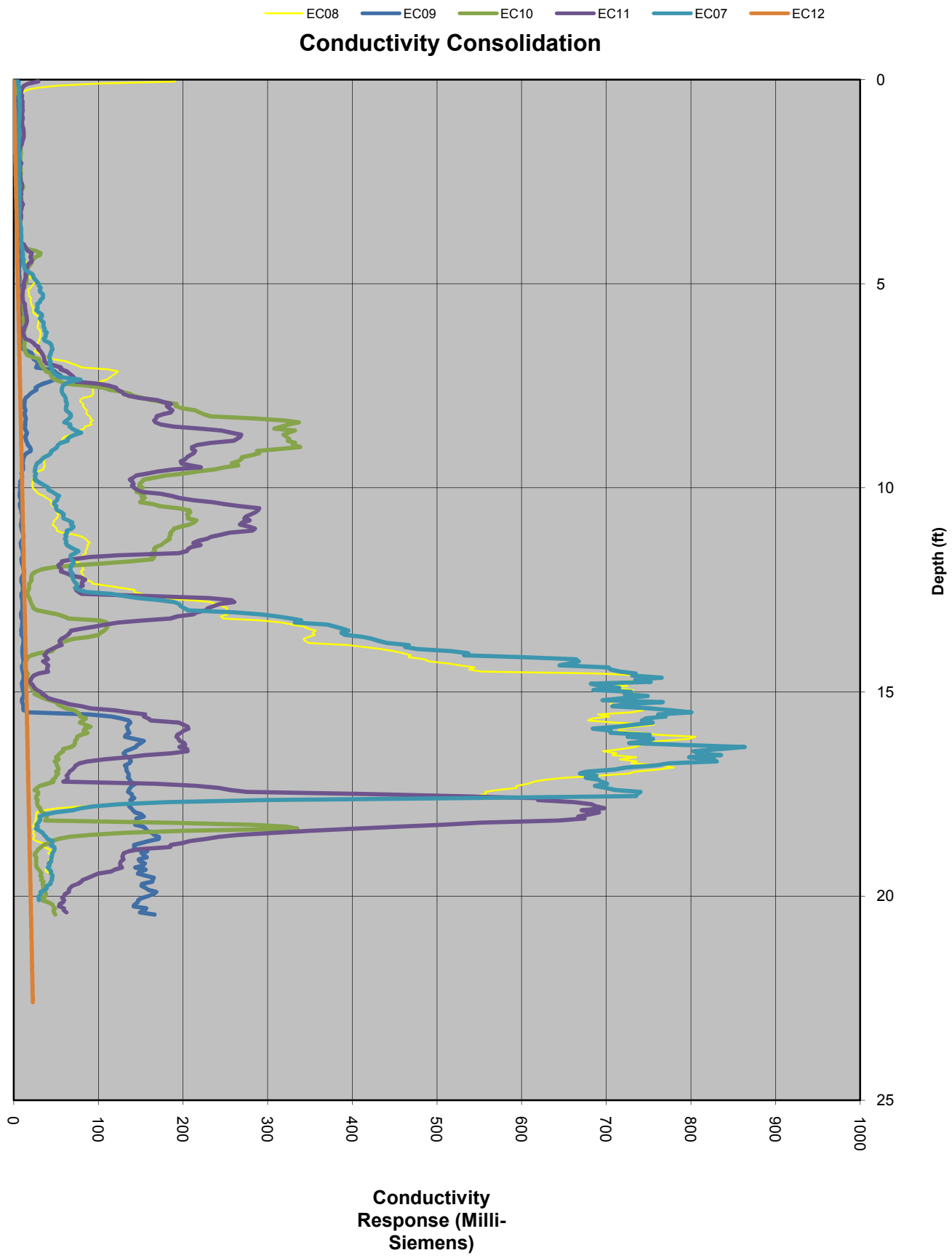
EC08
EC09
EC10
EC11
EC07
EC12
Conductivity Consolidation
0
5
10
15
20
25
Depth (ft)
0
100
200
300
400
500
600
700
800
900
1000
Conductivity Response (Milli-Siemens)

4961 Telsa Drive
Suite E
Bowie, MD 20715
P:301-352-6642
F:301-352-6643
www.vironex.com

Boring Name: EC-01

Total Depth (ft): 20.9

Notes:
Airknifed to 5' bgs.

GW Depth (ft):
Depth of GW Provided by Client

Job Information		EC Sampling Information			
Client Company:	XDD	Trunkline Length:	100	Start Boring Time:	Fri Nov 20 2009 08:24
Project Name:	Indian Head Naval Facility	Probe Type:	Dipole	End Boring Time:	Fri Nov 20 2009 09:04
Site Address:	4000 Indian Head Hwy. Indian Head, MD20640	Rig Type:	Geoprobe 66DT	EC Specialist:	Chuck Terry

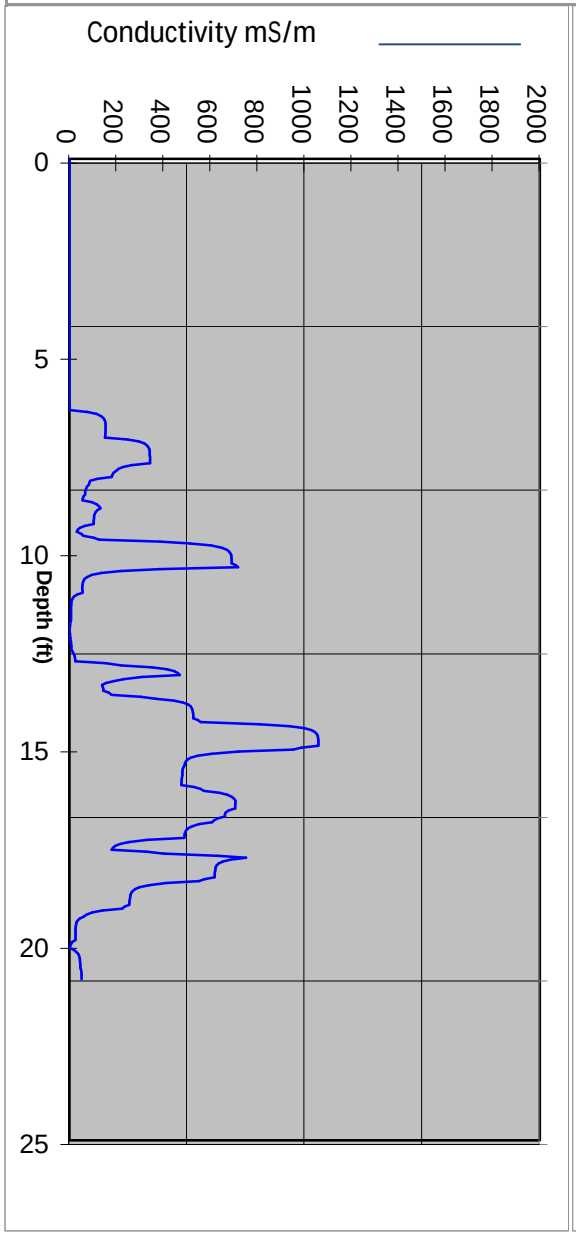

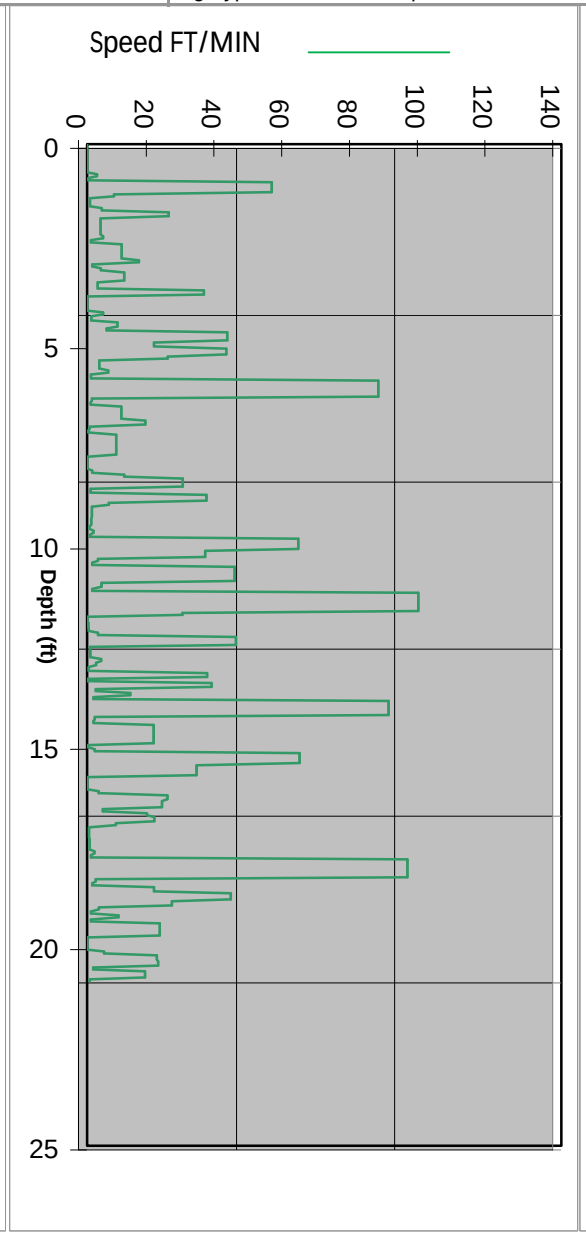

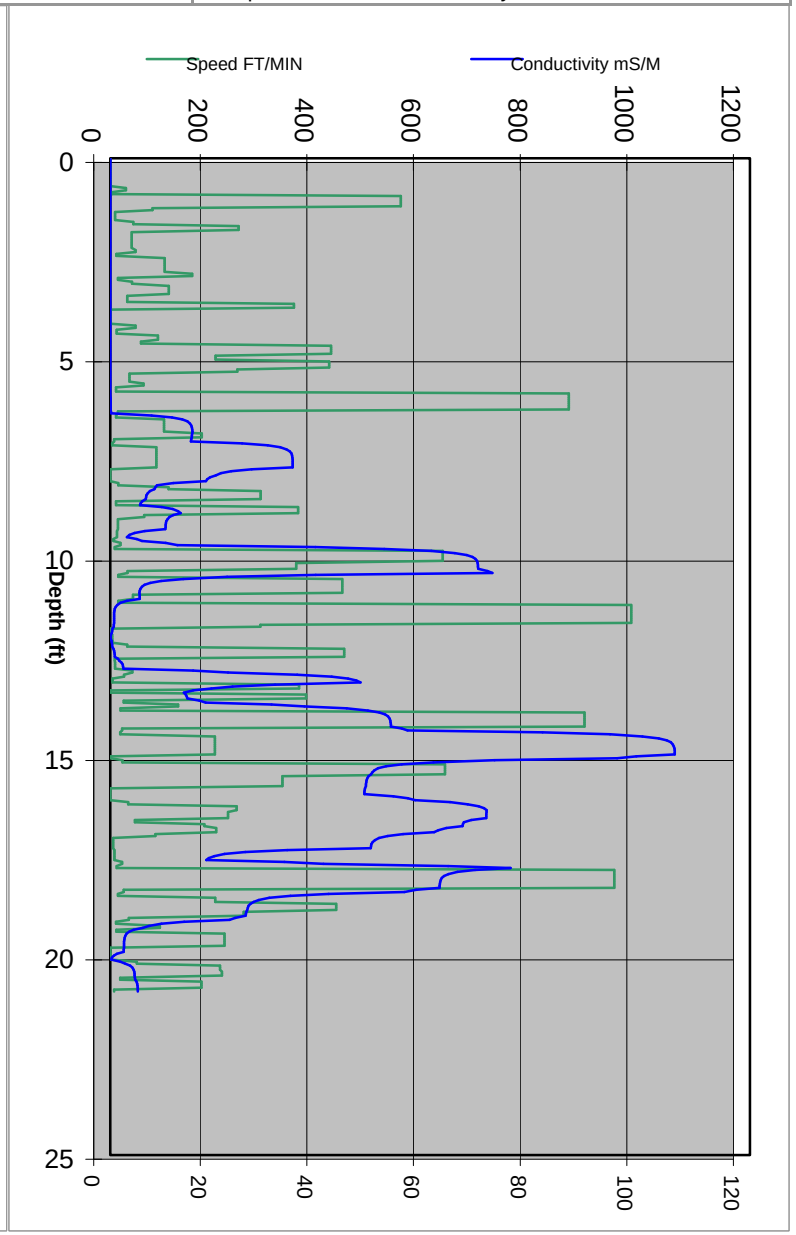

4961 Telsa Drive
Suite E
Bowie, MD 20715
P:301-352-6642
F:301-352-6643
www.vironex.com

Boring Name: EC-02

Total Depth (ft): 21.1

Notes:
Airknifed to 5' bgs.

GW Depth (ft):
Depth of GW Provided by Client

Job Information		EC Sampling Information			
Client Company:	XDD	Trunkline Length:	100	Start Boring Time:	Fri Nov 20 2009 09:21
Project Name:	Indian Head Naval Facility	Probe Type:	Dipole	End Boring Time:	Fri Nov 20 2009 09:33
Site Address:	4000 Indian Head Hwy. Indian Head, MD20640	Rig Type:	Geoprobe 66DT	EC Specialist:	Chuck Terry

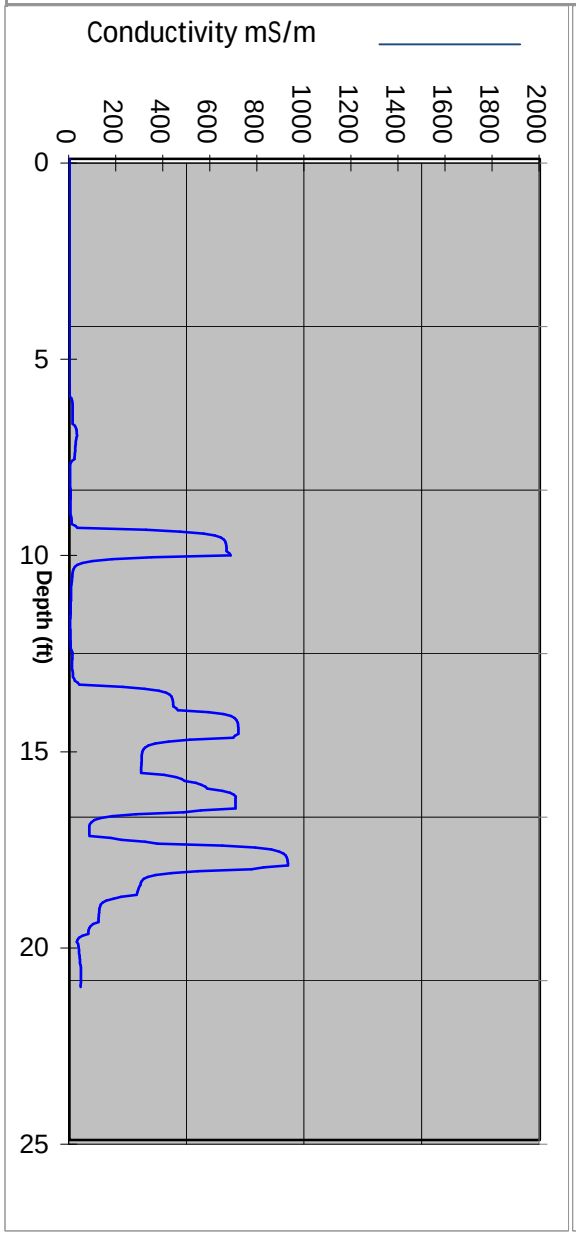

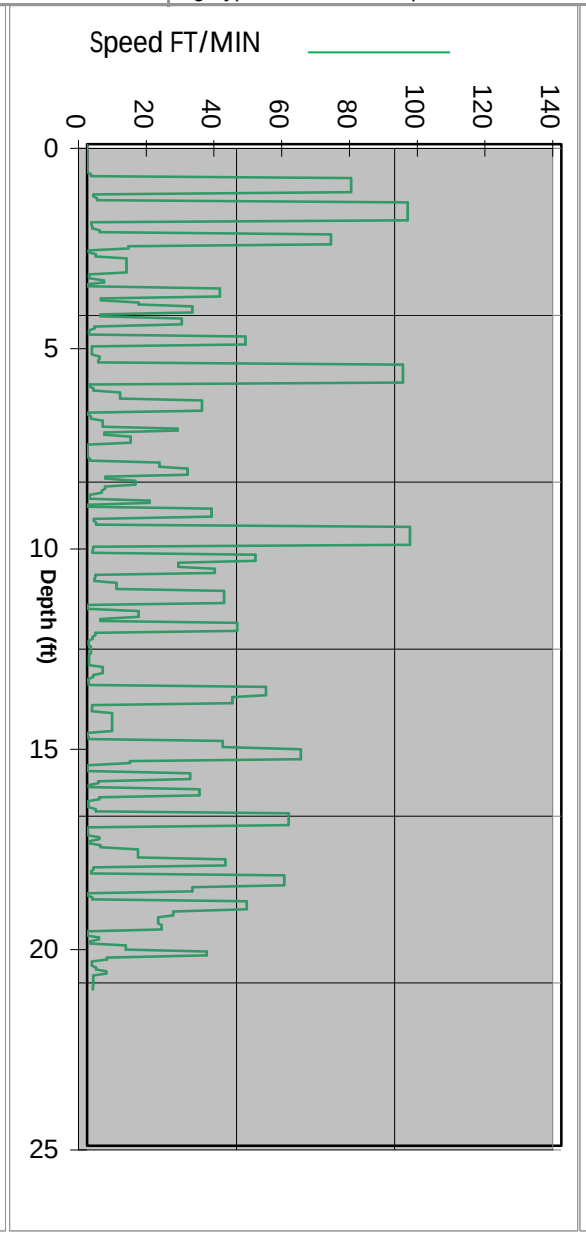

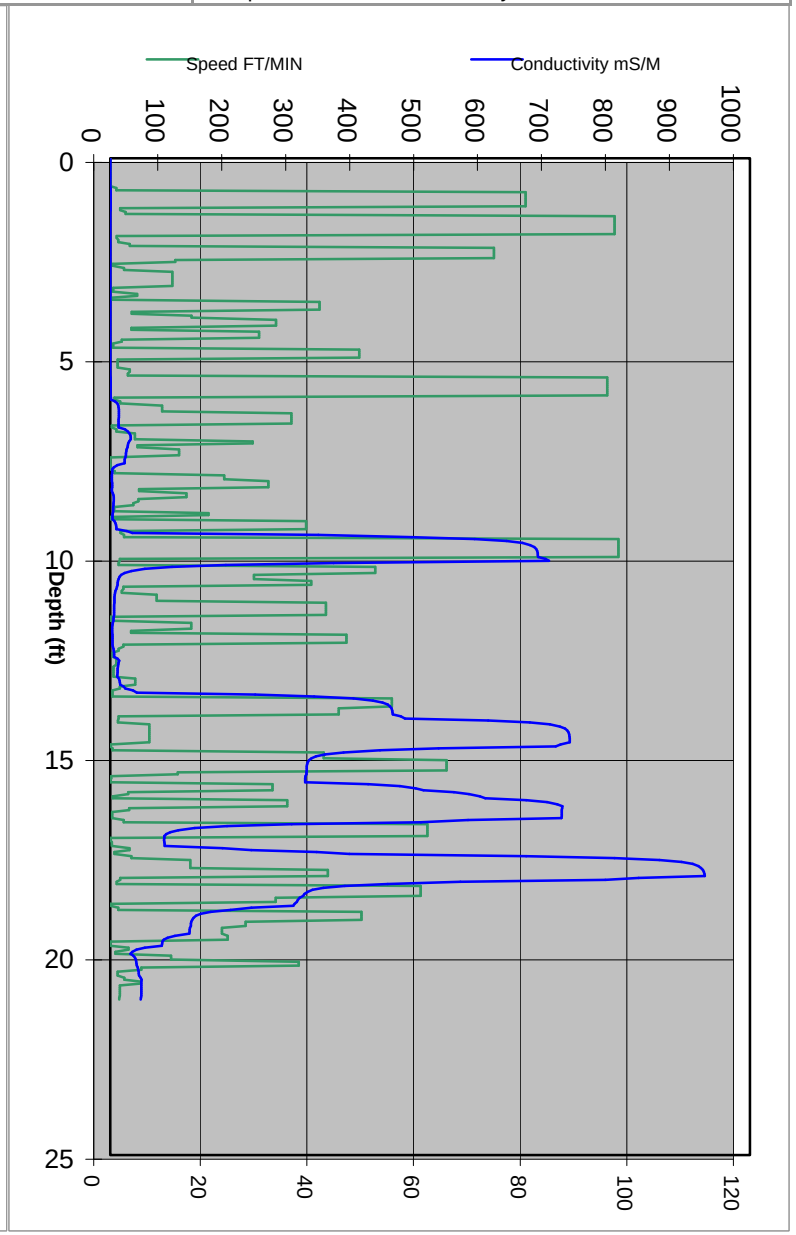

4961 Telsa Drive
Suite E
Bowie, MD 20715
P:301-352-6642
F:301-352-6643
www.vironex.com

Boring Name: EC-03

Total Depth (ft): 20.75

Notes:
Airknifed to 5' bgs.

GW Depth (ft):
Depth of GW Provided by Client

Job Information		EC Sampling Information			
Client Company:	XDD	Trunkline Length:	100	Start Boring Time:	Fri Nov 20 2009 09:42
Project Name:	Indian Head Naval Facility	Probe Type:	Dipole	End Boring Time:	Fri Nov 20 2009 09:52
Site Address:	4000 Indian Head Hwy. Indian Head, MD20640	Rig Type:	Geoprobe 5410	EC Specialist:	Chuck Terry

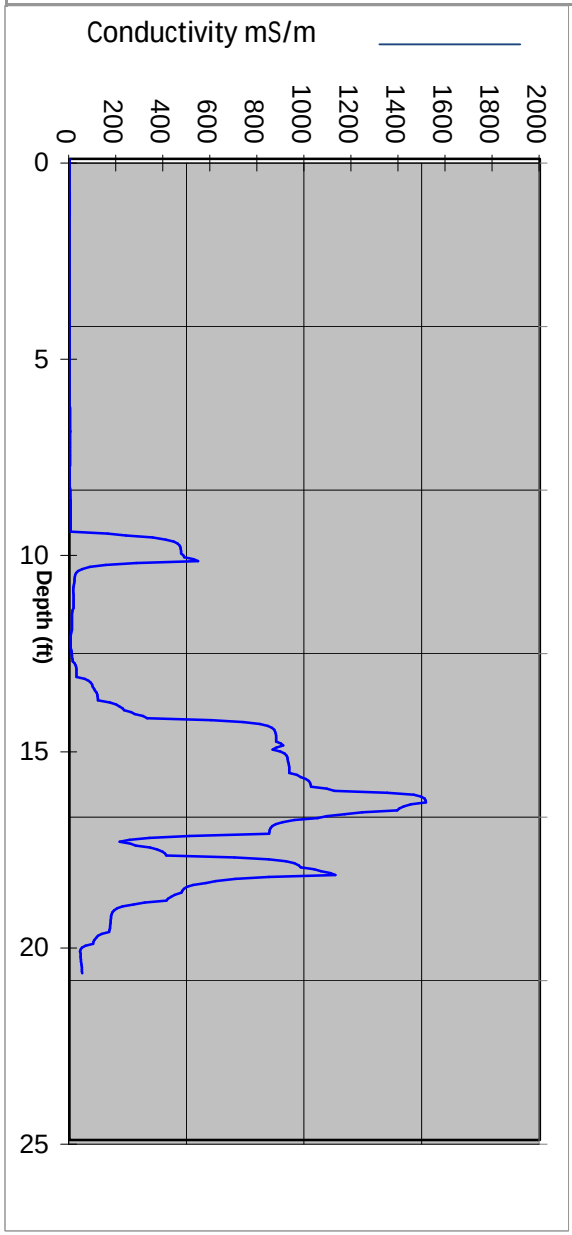

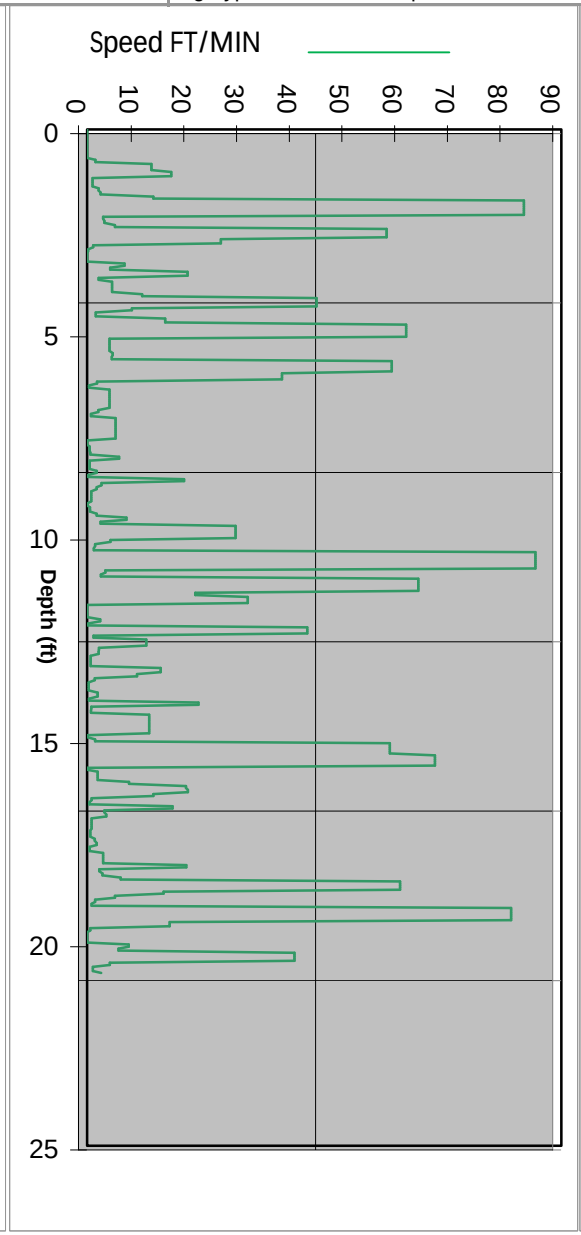

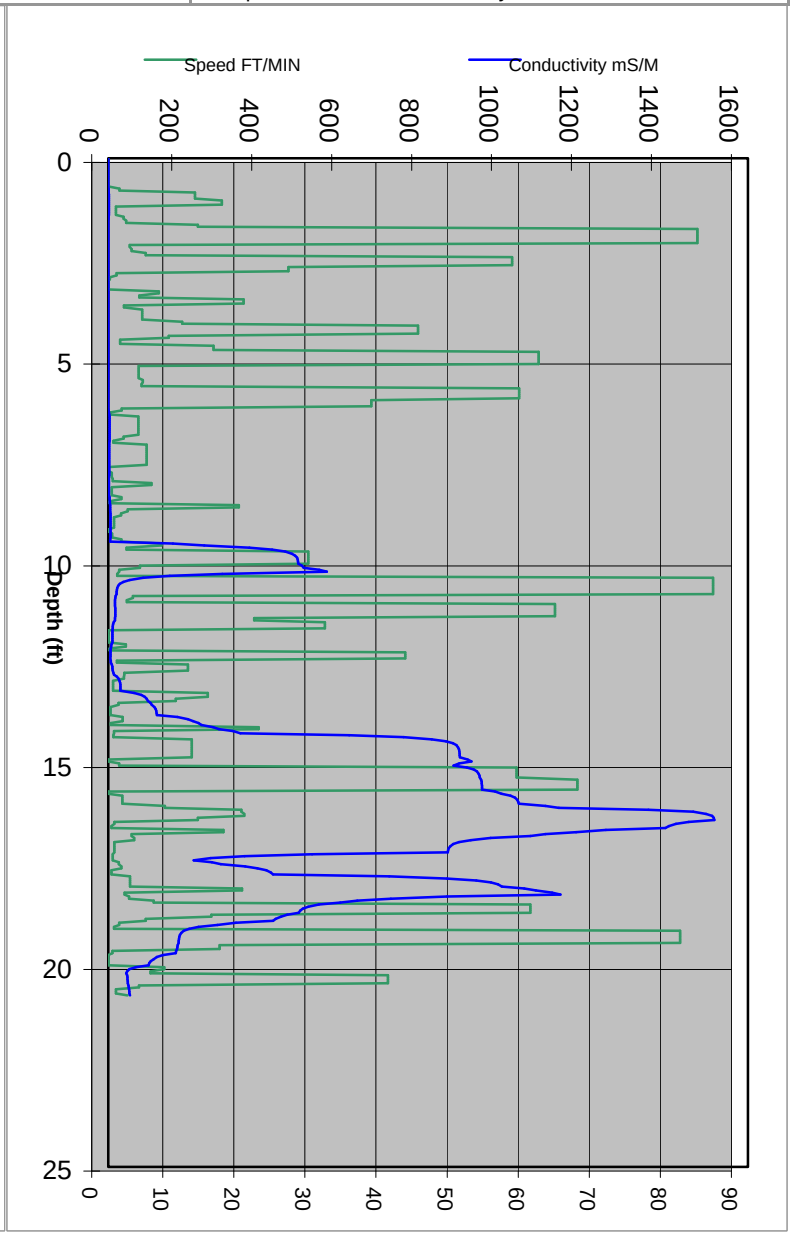

4961 Telsa Drive
Suite E
Bowie, MD 20715
P:301-352-6642
F:301-352-6643
www.vironex.com

Boring Name: EC-04

Total Depth (ft): 20.2

Notes:
Airknifed to 5' bgs. Probe fell through backfill into slightly conductive soil, creating flat reading from 0 - 6' bgs.

GW Depth (ft):
Depth of GW Provided by Client

Job Information		EC Sampling Information			
Client Company:	XDD	Trunkline Length:	100	Start Boring Time:	Fri Nov 20 2009 10:43
Project Name:	Indian Head Naval Facility	Probe Type:	Dipole	End Boring Time:	Fri Nov 20 2009 11:24
Site Address:	4000 Indian Head Hwy. Indian Head, MD20640	Rig Type:	Geoprobe 66DT	EC Specialist:	Chuck Terry

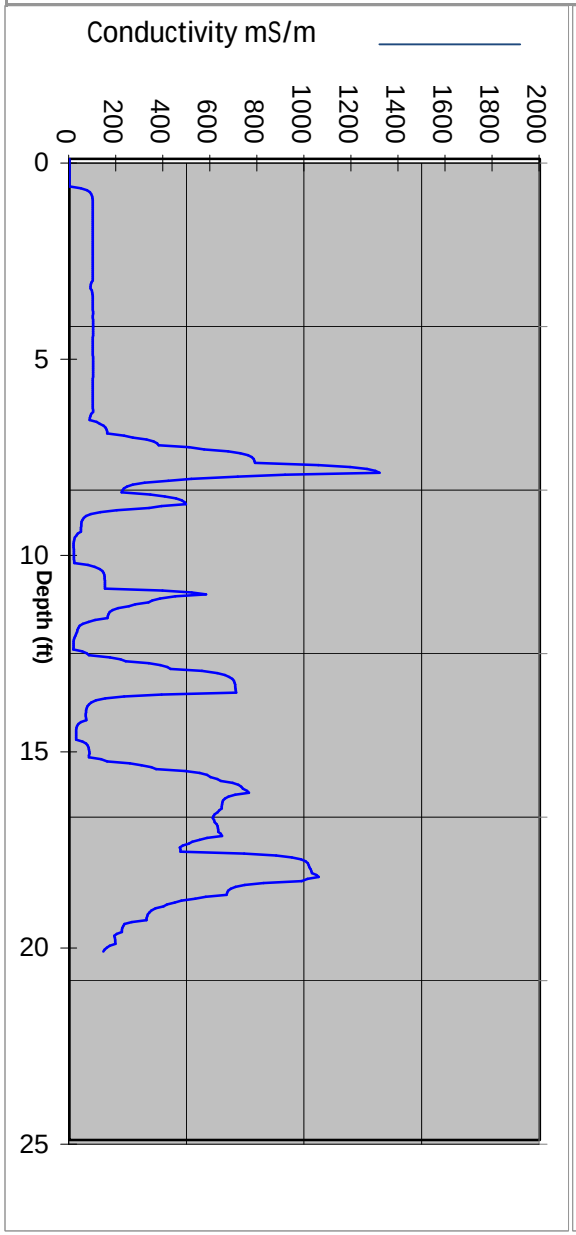

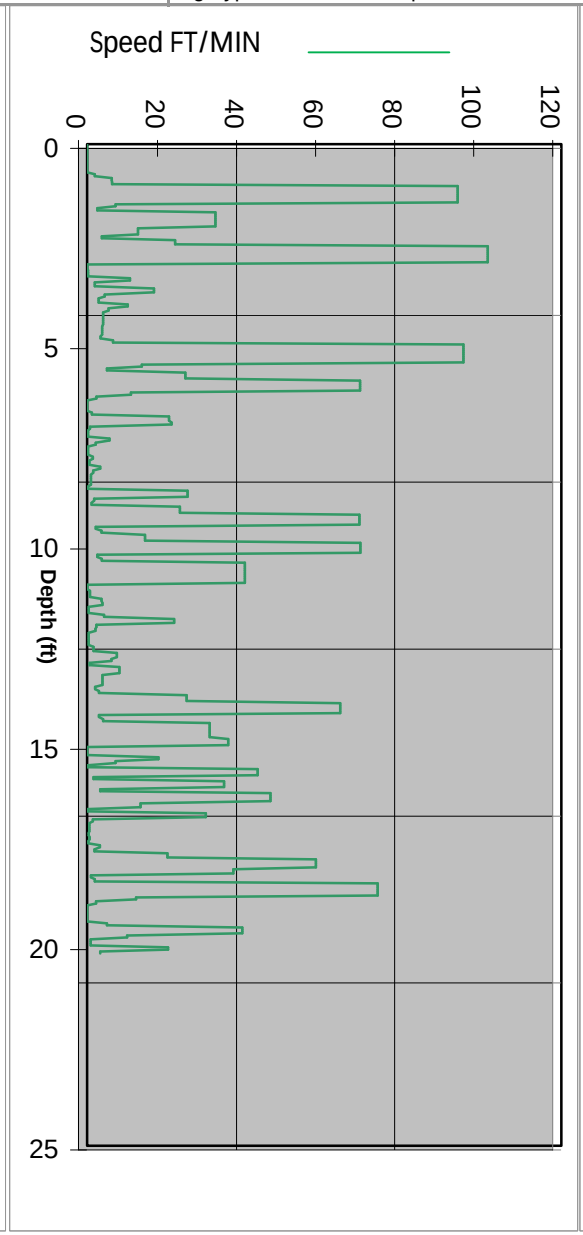

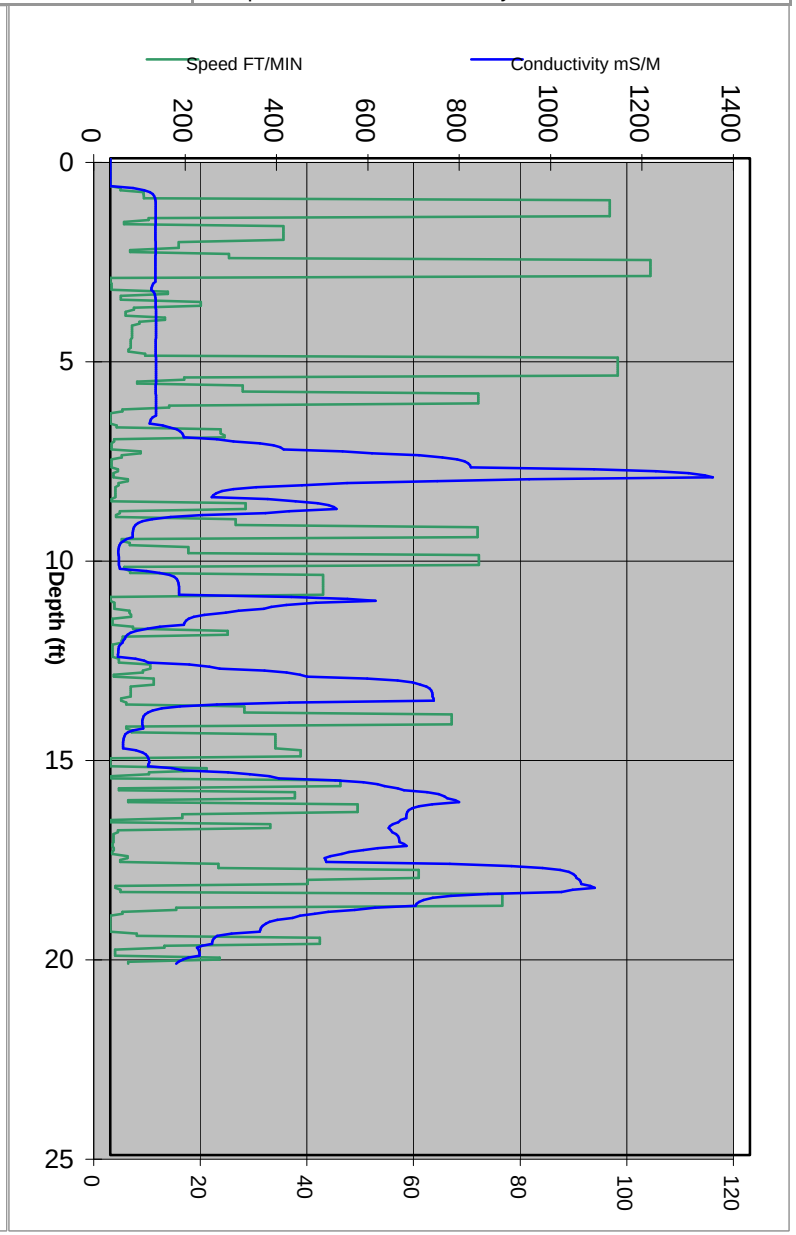

4961 Telsa Drive
Suite E
Bowie, MD 20715
P:301-352-6642
F:301-352-6643
www.vironex.com

Boring Name: EC-05

Total Depth (ft): 21.5

Notes:
Airknifed to 5' bgs.

GW Depth (ft):
Depth of GW Provided by Client

Job Information		EC Sampling Information			
Client Company:	XDD	Trunkline Length:	100	Start Boring Time:	Fri Nov 20 2009 10:18
Project Name:	Indian Head Naval Facility	Probe Type:	Dipole	End Boring Time:	Fri Nov 20 2009 10:27
Site Address:	4000 Indian Head Hwy. Indian Head, MD20640	Rig Type:	Geoprobe 66DT	EC Specialist:	Mike Martin

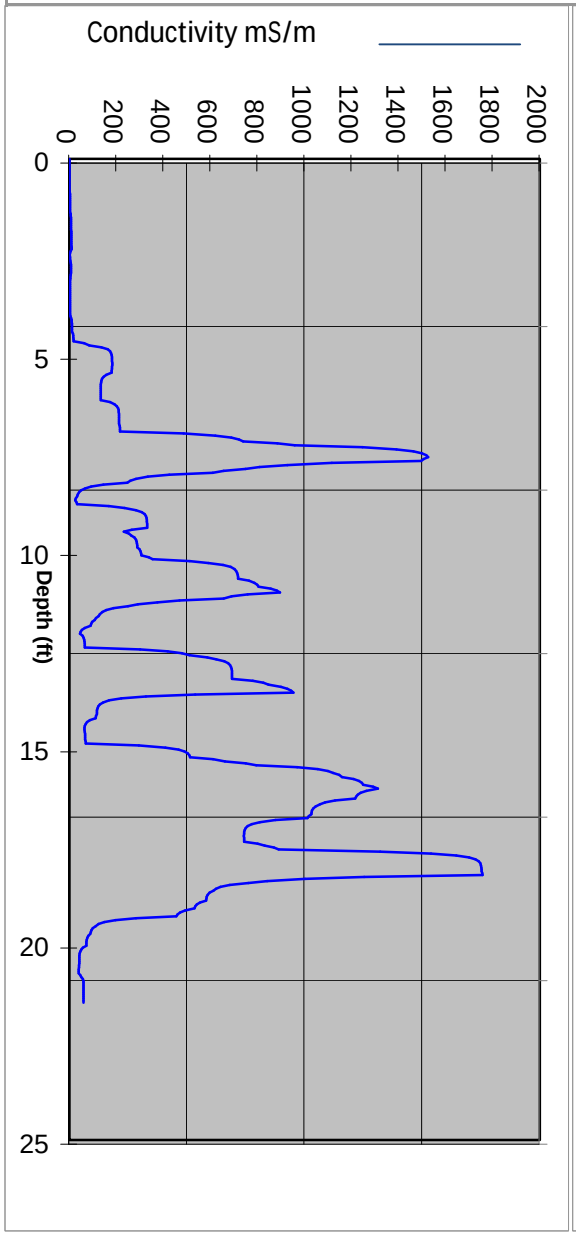

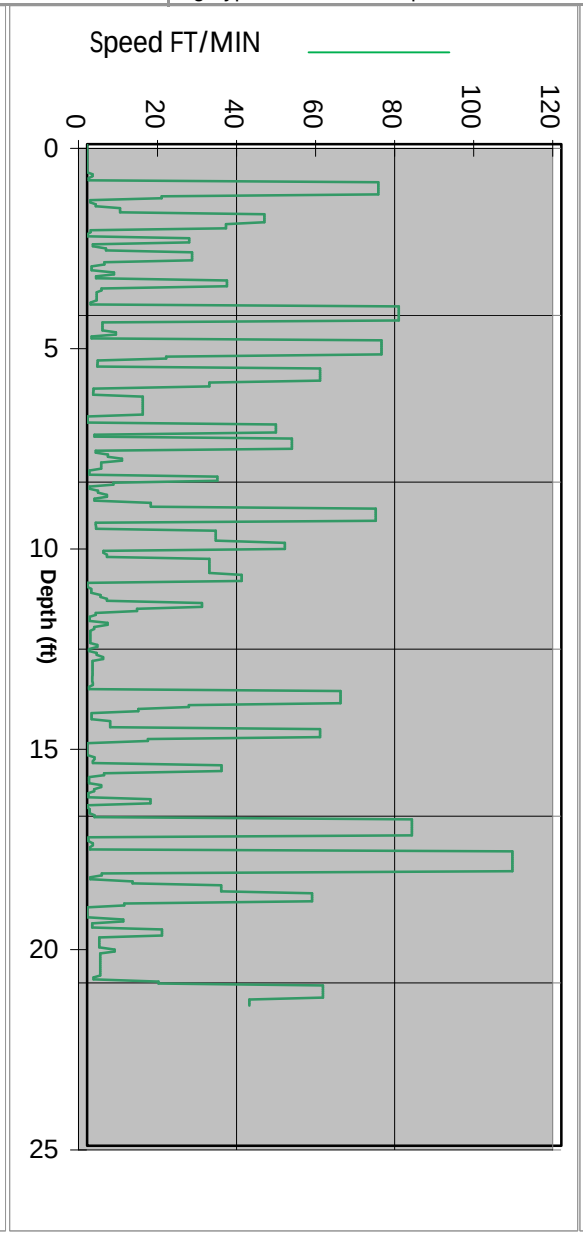

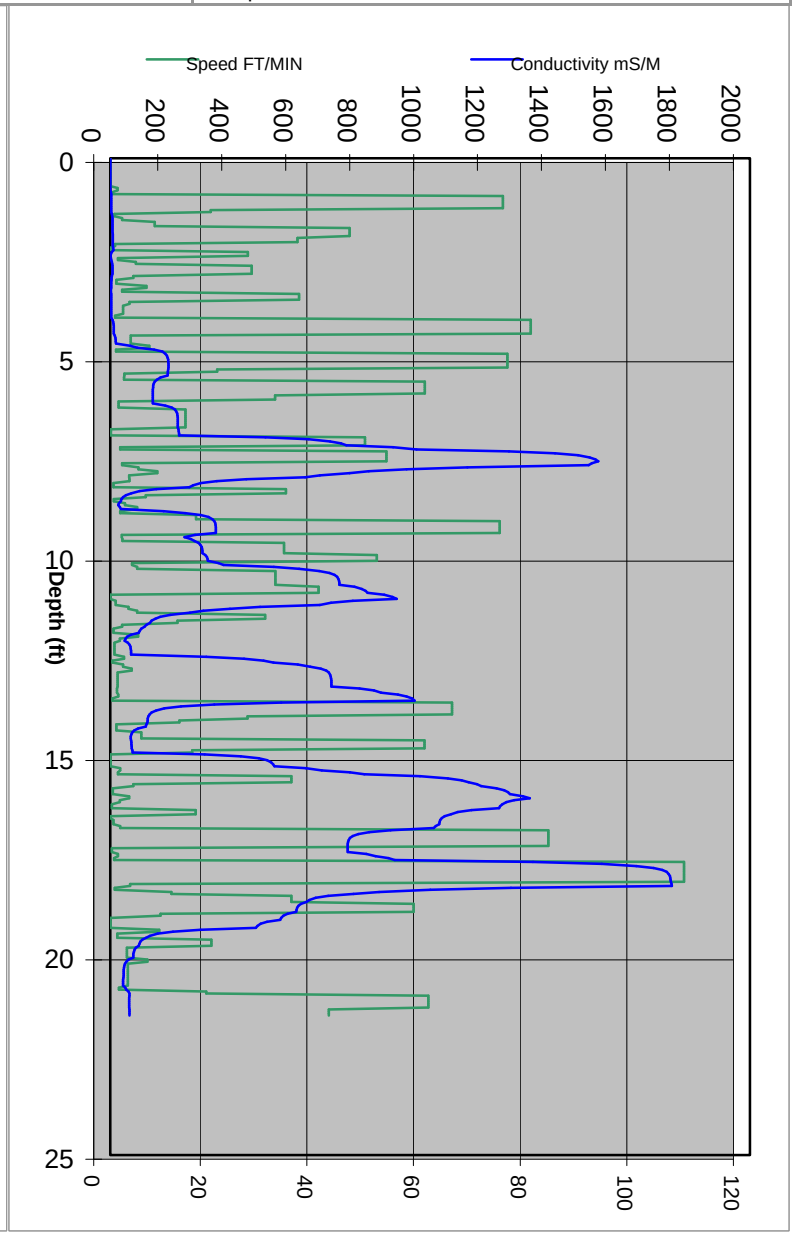

4961 Telsa Drive
Suite E
Bowie, MD 20715
P:301-352-6642
F:301-352-6643
www.vironex.com

Boring Name: EC-06

Total Depth (ft): 21.95

Notes:
Airknifed to 5' bgs.

GW Depth (ft):
Depth of GW Provided by Client

Job Information		EC Sampling Information			
Client Company:	XDD	Trunkline Length:	100	Start Boring Time:	Fri Nov 20 2009 11:30
Project Name:	Indian Head Naval Facility	Probe Type:	Dipole	End Boring Time:	Fri Nov 20 2009 11:38
Site Address:	4000 Indian Head Hwy. Indian Head, MD20640	Rig Type:	Geoprobe 66DT	EC Specialist:	Chuck Terry

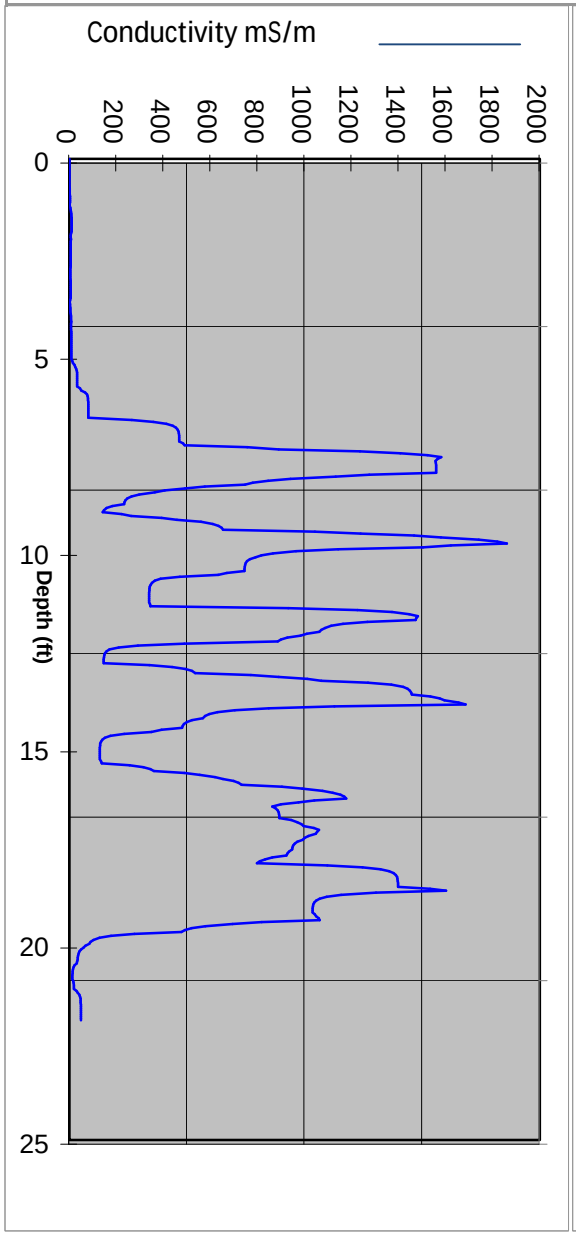

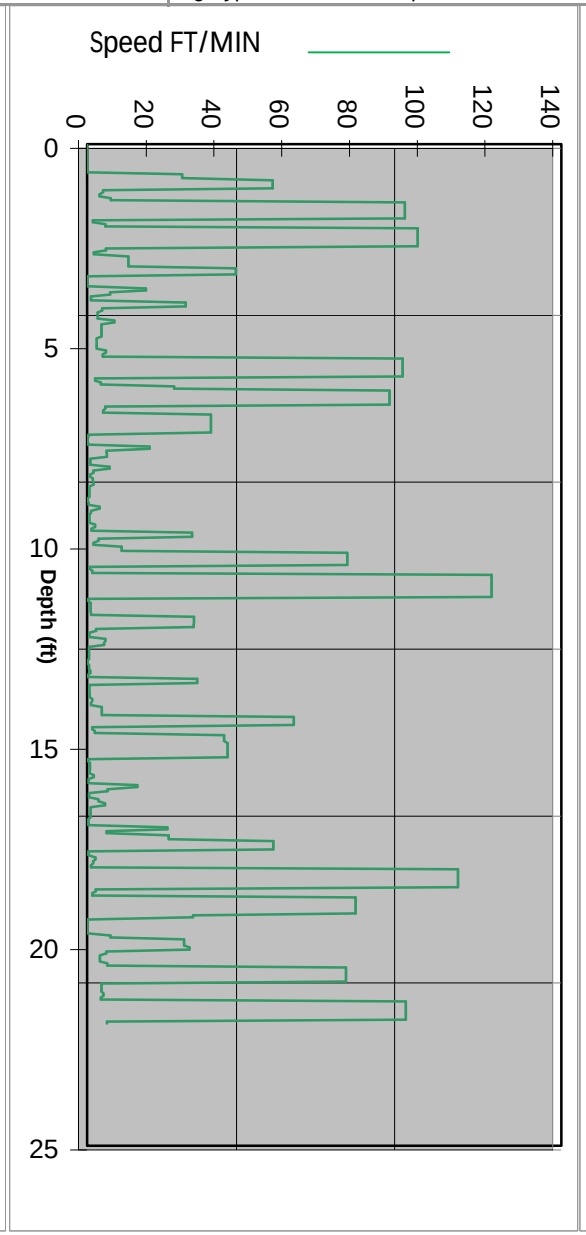

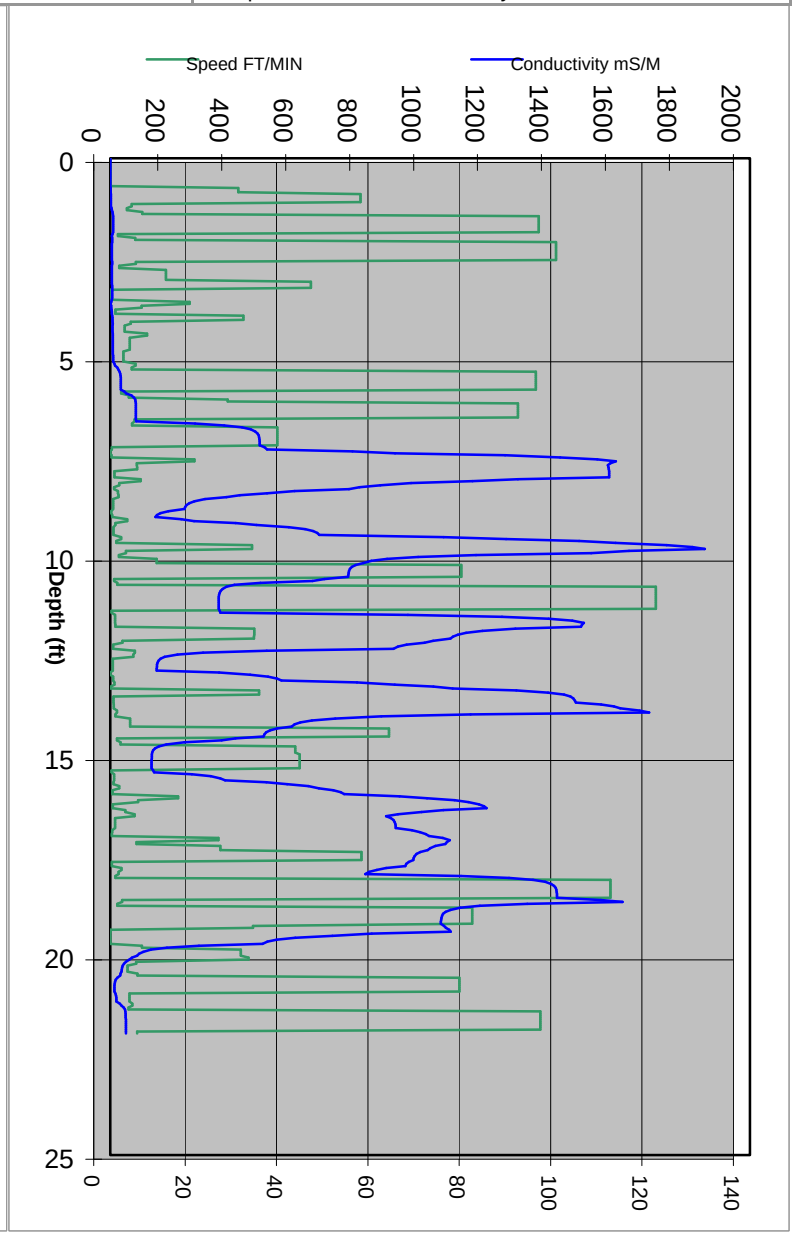

4961 Telsa Drive
Suite E
Bowie, MD 20715
P:301-352-6642
F:301-352-6643
www.vironex.com

Boring Name: ECBG-01

Total Depth (ft): 20.15

Notes:
Airknifed to 5' bgs.

GW Depth (ft):
Depth of GW Provided by Client

Job Information		EC Sampling Information			
Client Company:	XDD	Trunkline Length:	100	Start Boring Time:	Fri Nov 20 2009 12:41
Project Name:	Indian Head Naval Facility	Probe Type:	Dipole	End Boring Time:	Fri Nov 20 2009 12:57
Site Address:	4000 Indian Head Hwy. Indian Head, MD20640	Rig Type:	Geoprobe 66DT	EC Specialist:	Chuck Terry

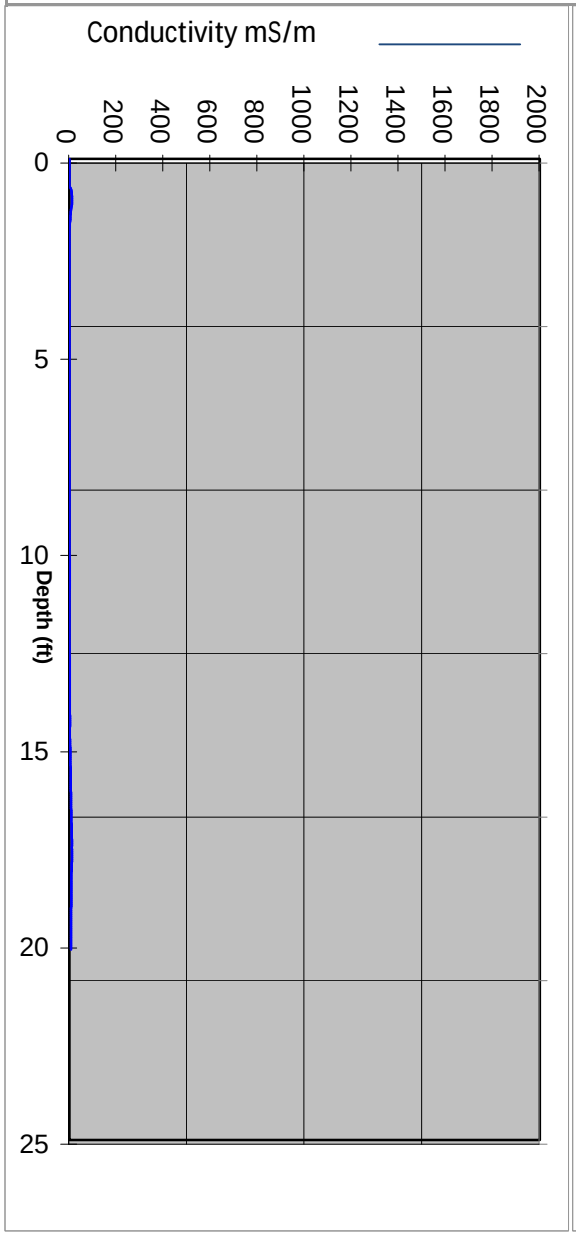

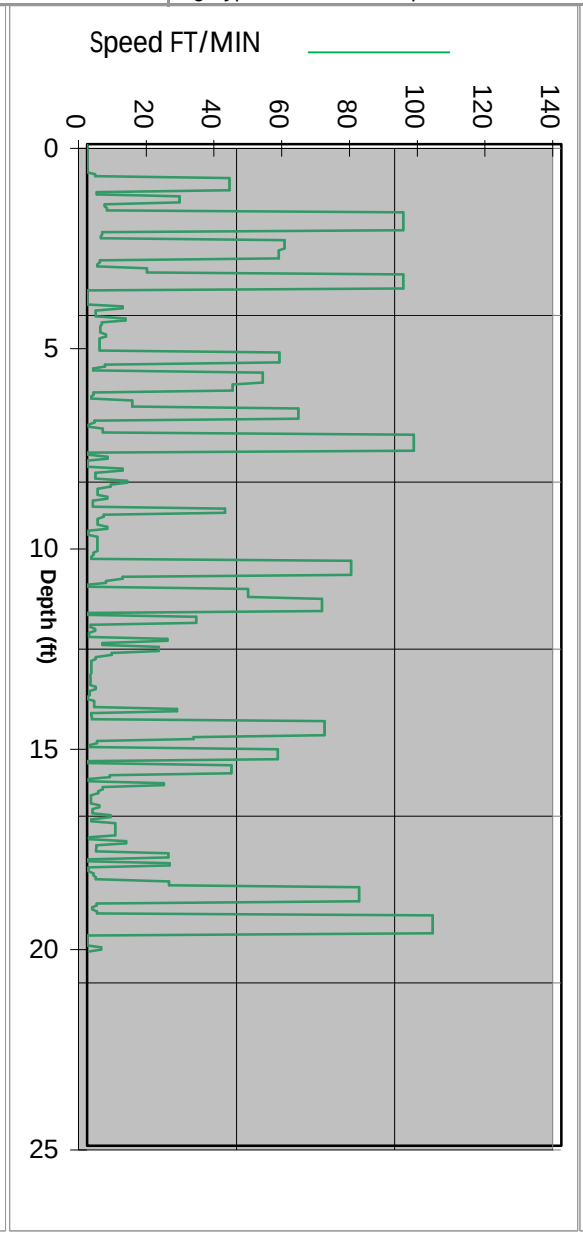

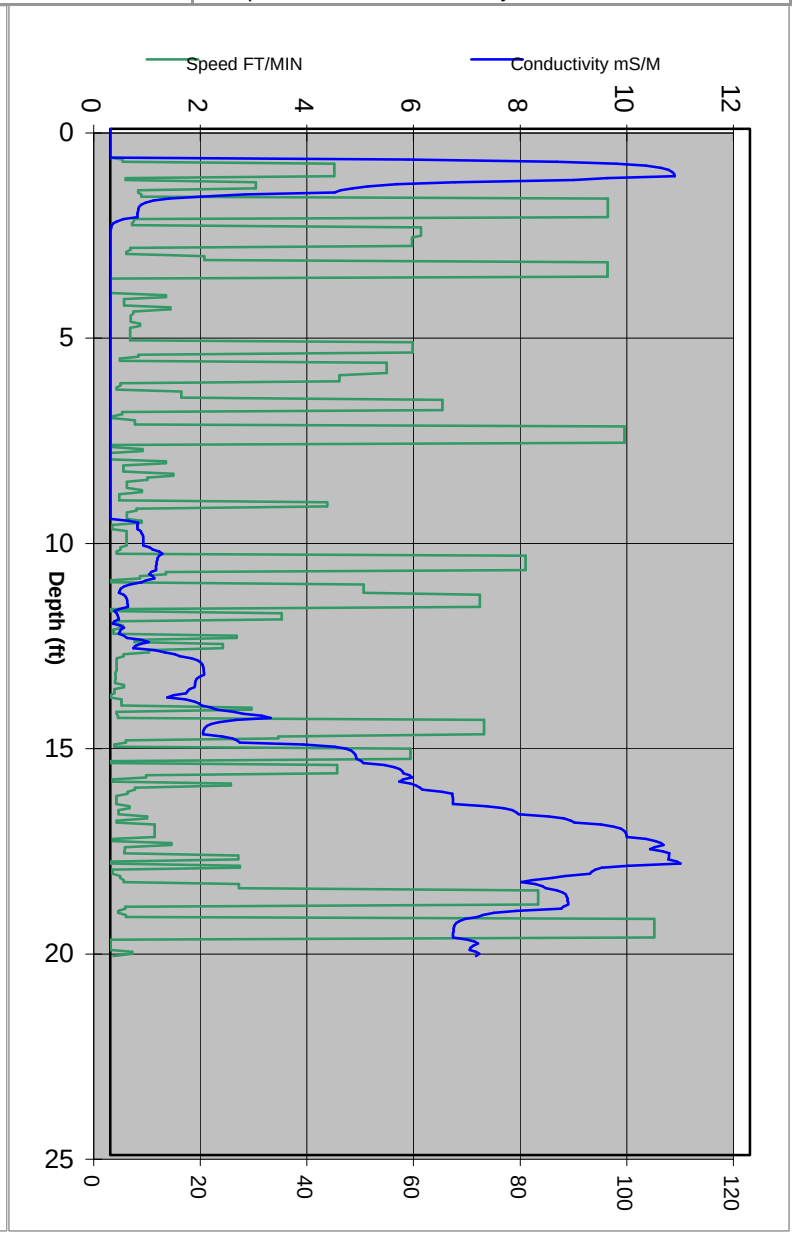

4961 Telsa Drive
Suite E
Bowie, MD 20715
P:301-352-6642
F:301-352-6643
www.vironex.com

Boring Name: ECBG-02

Total Depth (ft): 20.7

Notes:
Airknifed to 5' bgs.

GW Depth (ft):
Depth of GW Provided by Client

Job Information		EC Sampling Information			
Client Company:	XDD	Trunkline Length:	100	Start Boring Time:	Fri Nov 20 2009 13:09
Project Name:	Indian Head Naval Facility	Probe Type:	Dipole	End Boring Time:	Fri Nov 20 2009 13:25
Site Address:	4000 Indian Head Hwy. Indian Head, MD20640	Rig Type:	Geoprobe 66DT	EC Specialist:	Chuck Terry

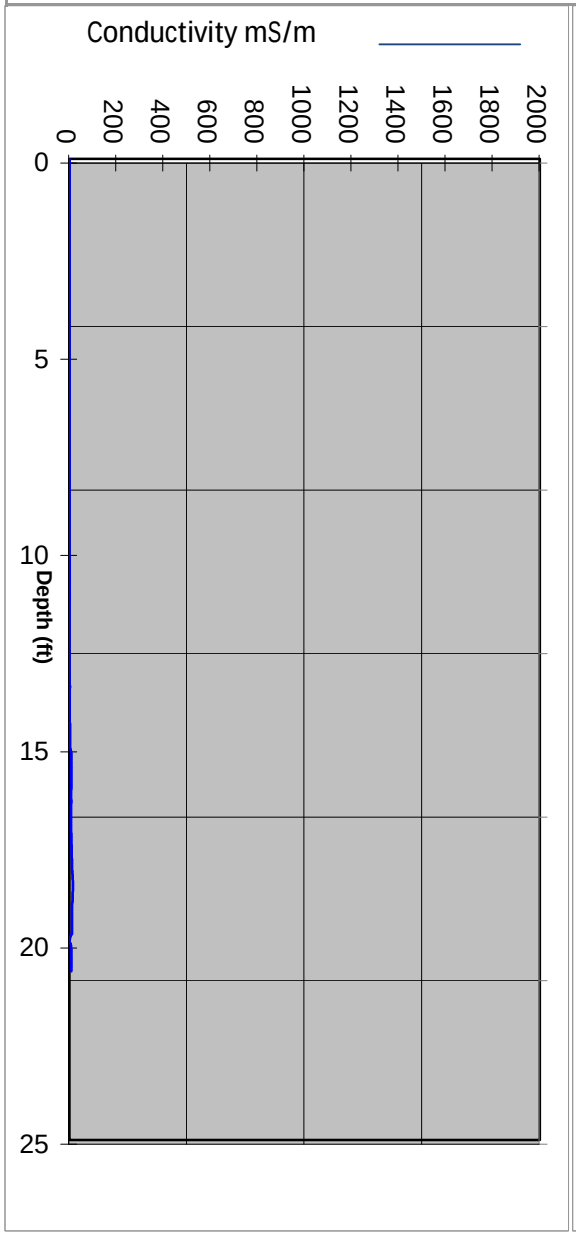

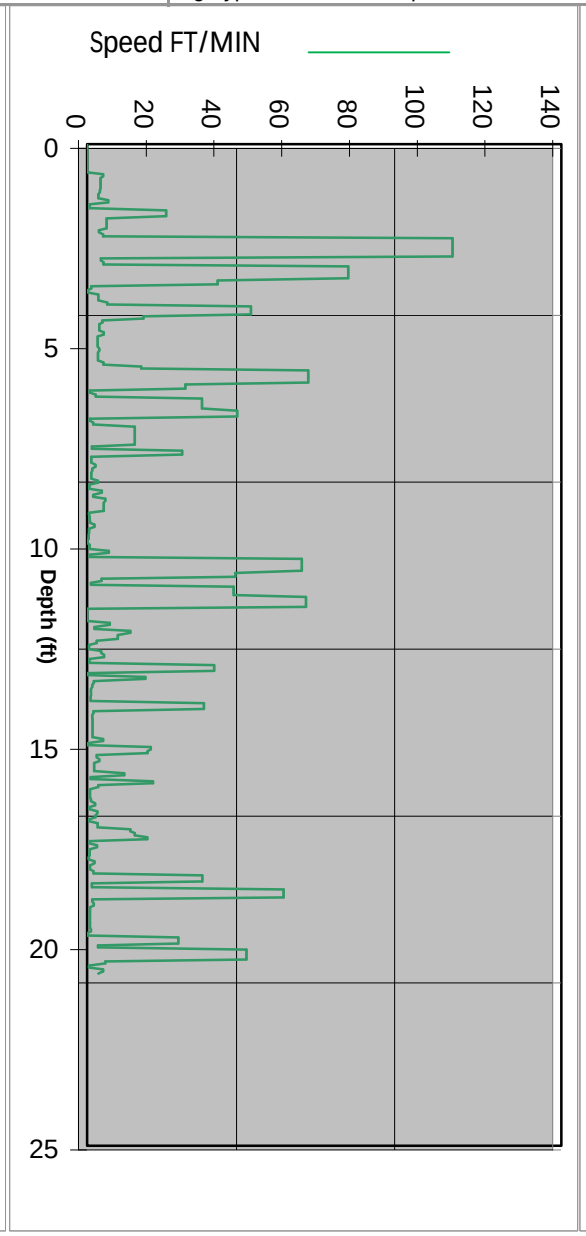

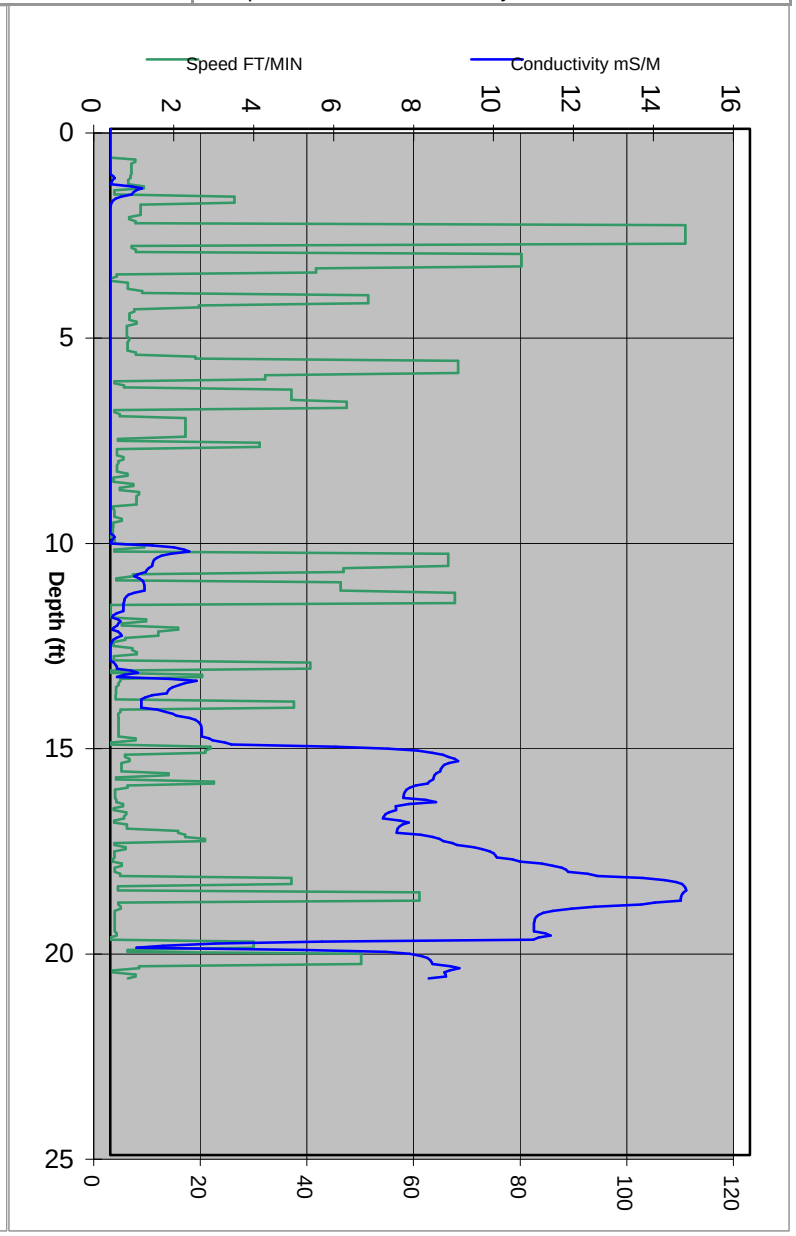

Appendix F
Conceptual Design and Cost Estimate

TABLE F-1
Cost Summary
Site 47 ISCO Pilot Study Technology Performance Evaluatior
NSF-IH, Indian Head, Maryland

Alternative	Description	2011 Dollar Capital Cost	2011 Dollar O&M Cost	Present Worth Lifetime O&M Cost	Total Present Worth Cost
Alternative 1	No Action	$0	$0	$0	$0
Alternative 2	Source Area Treatment Using ISCO, MNA, and ICs	$2,707,474	$3,461,663	$1,456,192	$4,163,667

REMEDIAL ALTERNATIVE 2 Source Treatment Using ISCO, MNA, and ICs	LOCATION: Site 47 Mercuric Nitrate Disposal Area NSF-IH, Indian Head, Maryland	MEDIA: Groundwater	Construction time: 17 weeks Operation time: 52 years Post Remediation Monitoring: included in the operation time

Cost Component	Qty	Unit	Cost Source	Estimated Activity Duration (day)	Labor Unit Cost	Labor Total Cost	Equipment Unit Cost	Equipment Total Cost	Material Unit Cost	Material Total Cost	Subcontractor	Total Cost
CAPITAL COSTS												
Construction Cost												
Site Preparation				**5**								**$15,017.50**
Site Clearing (very minimal - by hand)	0.5	acre	M 02230 200 0100	1	$1,725.00	$862.50	$0.00	$0.00	$0.00	$0.00	$0.00	$862.50
Survey (elevation and coordinates of new MWs - 2 man crew)	1	lump sum	PHRA Quote	1	$0.00	$0.00	$0.00	$0.00	$0.00	$0.00	$1,855.00	$1,855.00
Personnel and Equipment Decon Setups (1 during drilling, 1 during Phase I ISCO, and 1 during Phase II ISCO)	3	ea	Professional Judgment	3	$1,600.00	$4,800.00	$500.00	$1,500.00	$2,000.00	$6,000.00	$0.00	$12,300.00
Remediation Activities				**83**								**$1,044,097.48**
Phase I												
Installation of MWs (see Alt 2 Breakdown)	8	wells	BOA rates	10	$0.00	$0.00	$0.00	$0.00	$0.00	$0.00	$29,612.48	$29,612.48
Installation of Horizontal Injection Wells, Phase 1 (See Alt 2 Breakdown)	2	wells	DTD Quote	7	$0.00	$0.00	$0.00	$0.00	$0.00	$0.00	$117,620.00	$117,620.00
Air knifing	4	days	DTD Quote	4	$0.00	$0.00	$0.00	$0.00	$0.00	$0.00	$8,900.00	$8,900.00
Phase I ISCO System (see Alt 2 Breakdown)												
Injection Activities	1	lump sum	Cost derived from Pilot Test	25	$0.00	$0.00	$0.00	$0.00	$0.00	$0.00	$325,307.50	$325,307.50
Continuous Conductivity Profiling Each Phase	2	days	Vironex Quote	2	$0.00	$0.00	$0.00	$0.00	$0.00	$0.00	$6,000.00	$6,000.00
Phase II												
Installation of Horizontal Injection Wells, Phase 2 (See Alt 2 Breakdown)	3	wells	DTD Quote	12	$0.00	$0.00	$0.00	$0.00	$0.00	$0.00	$220,900.00	$220,900.00
Air knifing	2	days	DTD Quote	2	$0.00	$0.00	$0.00	$0.00	$0.00	$0.00	$4,450.00	$4,450.00
Phase I & Phase II ISCO System (see Alt 2 Breakdown)												
Injection Activities	1	lump sum	Cost derived from Pilot Test	25	$0.00	$0.00	$0.00	$0.00	$0.00	$0.00	$325,307.50	$325,307.50
Continuous Conductivity Profiling Each Phase	2	days	Vironex Quote	2	$0.00	$0.00	$0.00	$0.00	$0.00	$0.00	$6,000.00	$6,000.00
Construction Oversight												**$231,732.00**
Field Superintendent/Safety Engineer	17.0	weeks	CH2M HILL Rate		$6,642.00	$112,914.00	$0.00	$0.00	$0.00	$0.00	$0.00	$112,914.00
Field Engineer	17.0	weeks	CH2M HILL Rate		$5,166.00	$87,822.00	$0.00	$0.00	$0.00	$0.00	$0.00	$87,822.00
Ambient Air Monitoring Specialist - during well installation	6.0	weeks	CH2M HILL Rate		$5,166.00	$30,996.00	$0.00	$0.00	$0.00	$0.00	$0.00	$30,996.00
Lodging and Per diem	205	day/3 persons			$0.00	$0.00	$0.00	$0.00	$150.00	$30,750.00	$0.00	$30,750.00
Vehicle Rental and Fuel - 2 vehicles	88	days			$0.00	$0.00	$155.00	$13,640.00	$50.00	$4,400.00	$0.00	$18,040.00
Temporary Facility and Control												**$17,255.00**
Trailer, porto toilet, fence, barrier	17	weeks			$0.00	$0.00	$1,015.00	$17,255.00	$0.00	$0.00	$0.00	$17,255.00
SUBTOTAL FIELD CONSTRUCTION COST												**$1,356,891.98**
Contractor Overhead and Profit												**$203,533.80**
Home office cost, etc.	1	lump sum	15% of total construction cost									$203,533.80
General Conditions												**$94,982.44**
Decontamination, temp. facilities, sed. & erosion control, temp. fence, etc.	1	lump sum	7% of total construction cost									$94,982.44
Mob/Demob												**$135,689.20**
Mob/demob of personnel, equipment, and material	1	lump sum	10% of total construction cost									$135,689.20
SUBTOTAL CONSTRUCTION COST												**$1,791,097.41**
Institutional Controls/Planning												**$5,000.00**
Site-Specific LUC	1	lump sum	Professional Judgment		$5,000.00	$5,000.00	$0.00	$0.00	$0.00	$0.00	$0.00	$5,000.00
Permitting												**$5,000.00**
Injection and GW Permits	1	lump sum	Professional Judgment		$5,000.00	$5,000.00	$0.00	$0.00	$0.00	$0.00	$0.00	$5,000.00
Pre-construction Submittals												**$161,198.77**
Basis of Design Report	1	lump sum	3% of total construction cost									$53,732.92
UFP SAP (3 versions)	1	lump sum	3% of total construction cost									$35,821.95
Health and Safety Plan	1	lump sum	1% of total construction cost									$17,910.97
Drawings, Specification, & Cost Estimate	1	lump sum	3% of total construction cost									$53,732.92
SUBTOTAL CAPITAL COST												**$1,962,296.18**

REMEDIAL ALTERNATIVE 2 Source Treatment Using ISCO, MNA, and ICs	LOCATION: Site 47 Mercuric Nitrate Disposal Area NSF-IH, Indian Head, Maryland						MEDIA: Groundwater		Construction time:	17 weeks		
									Operation time:	52 years		
									Post Remediation Monitoring:	included in the operation time		
Scope Contingency	10%											$196,229.62
Bid Contingency	10%											$196,229.62
TOTAL CAPITAL COST												**$2,354,755.42**
SAMPLING AND ANALYSIS (PER EVENT)												
ISCO Sampling Event												
Saturated Soil Sampling												**$17,441.47**
Sample collection - DPT Drilling	2	days	BOA rates	2	$792.40	$1,584.79	$0.00	$0.00	$0.00	$0.00	$5,975.00	$7,559.79
Lab Analysis												
VOCs (8 locations @ 4 samples/location, 10% QC samples)	36	samples	IP/FP		$0.00	$0.00	$0.00	$0.00	$0.00	$0.00	$3,451.68	$3,451.68
TOC (8 locations)	8	locations	IP/FP		$0.00	$0.00	$0.00	$0.00	$0.00	$0.00	$472.40	$472.40
Disposable and decon materials per sample	44	samples	E 33 02 0401, 33 02 0402, 33 02 0561		$110.50	$4,862.00	$0.00	$0.00	$24.90	$1,095.60	$0.00	$5,957.60
Groundwater Sampling 2-Month Post-Injection Events												**$48,765.12**
Sample Collection												
Sample collection - 2 crew, 10 hrs/day, $50/hr, 22 wells	10	days	Professional Judgment	10	$2,500.00	$25,000.00	$0.00	$0.00	$0.00	$0.00	$0.00	$25,000.00
Disposable and decon materials per sample location	22	locations	E 33 02 0401, 33 02 0402, 33 02 0561		$110.50	$2,431.00	$0.00	$0.00	$24.90	$547.80	$0.00	$2,978.80
Equipment Rental	10	days	E 33 02 0573, 33 02 0578		$601.40	$6,014.00	$227.68	$2,276.80	$0.00	$0.00	$0.00	$8,290.80
Lab Analysis												
TAL Metals by CLP (ILM04) (filtered)	24	samples	BOA rates		$0.00	$0.00	$0.00	$0.00	$0.00	$0.00	$3,286.08	$3,286.08
TAL Metals by CLP (ILM04) (unfiltered)	24	samples	BOA rates		$0.00	$0.00	$0.00	$0.00	$0.00	$0.00	$3,286.08	$3,286.08
TCL Volatiles by CLP (OLM04)	24	samples	BOA rates		$0.00	$0.00	$0.00	$0.00	$0.00	$0.00	$2,280.00	$2,280.00
Chloride, nitrite/nitrate, sulfate (300.0)	24	samples	BOA Rates		$0.00	$0.00	$0.00	$0.00	$0.00	$0.00	$1,171.68	$1,171.68
TOC	24	samples	BOA Rates		$0.00	$0.00	$0.00	$0.00	$0.00	$0.00	$1,471.68	$1,471.68
Data Management and Evaluation	20	hours	CH2M HILL Rate		$50.00	$1,000.00	$0.00	$0.00	$0.00	$0.00	$0.00	$1,000.00
Long-Term Groundwater Monitoring Events												**$55,076.44**
Sample Collection												
Sample collection - 2 crew, 10 hrs/day, $50/hr, 15 wells	10	days	Professional Judgment	10	$2,500.00	$25,000.00	$0.00	$0.00	$0.00	$0.00	$0.00	$25,000.00
Disposable and decon materials per location	22	locations	E 33 02 0401, 33 02 0402, 33 02 0561		$110.50	$2,431.00	$0.00	$0.00	$24.90	$547.80	$0.00	$2,978.80
Equipment Rental	10	days	E 33 02 0573, 33 02 0578		$601.40	$6,014.00	$227.68	$2,276.80	$0.00	$0.00	$0.00	$8,290.80
Lab Analysis												
TAL Metals by CLP (ILM04) (filtered)	24	samples	BOA rates		$0.00	$0.00	$0.00	$0.00	$0.00	$0.00	$3,286.08	$3,286.08
TAL Metals by CLP (ILM04) (unfiltered)	24	samples	BOA rates		$0.00	$0.00	$0.00	$0.00	$0.00	$0.00	$3,286.08	$3,286.08
TCL Volatiles by CLP (OLM04) (only pre & post injection)	24	samples	BOA rates		$0.00	$0.00	$0.00	$0.00	$0.00	$0.00	$2,280.00	$2,280.00
PLFA, QPCR	3	samples	Microbial Insights Quote		$0.00	$0.00	$0.00	$0.00	$0.00	$0.00	$1,875.00	$1,875.00
Chloride, nitrite/nitrate, sulfate (300.0)	24	samples	BOA Rates		$0.00	$0.00	$0.00	$0.00	$0.00	$0.00	$1,171.68	$1,171.68
Methane, ethane, ethene (RSK-175)	24	samples	BOA Rates		$0.00	$0.00	$0.00	$0.00	$0.00	$0.00	$2,426.16	$2,426.16
Alkalinity (310.1)	24	samples	BOA Rates		$0.00	$0.00	$0.00	$0.00	$0.00	$0.00	$316.32	$316.32
TOC	24	samples	BOA Rates		$0.00	$0.00	$0.00	$0.00	$0.00	$0.00	$1,471.68	$1,471.68
Field parameters (covered in equipment rental)	24	samples	BOA Rates		$0.00	$0.00	$0.00	$0.00	$0.00	$0.00	$693.84	$693.84
Data Management and Evaluation	40	hours	CH2M HILL Rate		$50.00	$2,000.00	$0.00	$0.00	$0.00	$0.00	$0.00	$2,000.00

REMEDIAL ALTERNATIVE 2 Source Treatment Using ISCO, MNA, and ICs	LOCATION: Site 47 Mercuric Nitrate Disposal Area NSF-IH, Indian Head, Maryland	MEDIA: Groundwater	Construction time:	17 weeks
			Operation time:	52 years
			Post Remediation Monitoring:	included in the operation time

PERIODIC COST												
Five-Year Review												**$7,000.00**
Report	1	lump sum	Professional Judgment		$5,000.00	$5,000.00	$0.00	$0.00	$0.00	$0.00	$0.00	$5,000.00
Field Inspection	1	lump sum	Professional Judgment		$2,000.00	$2,000.00	$0.00			$0.00	$0.00	$2,000.00
Site Closure												**$25,000.00**
Report development	1	lump sum	Professional Judgment		$25,000.00	$25,000.00	$0.00		$0.00	$0.00	$0.00	$25,000.00

DESCRIPTION AND ASSUMPTIONS OF ALTERNATIVE:

1.) Implement ISCO using alkaline activated sodium persulfate in the source area. The source are is defined as the area where CT is greater then 500 µg/ L; which is futher divided into 2 areas: 1) The northern portion of the source area, which consists of the inferred DNAPL area (North Area) and 2) The sourthern portion of the source area (South Area). ISCO is implemented in 2 Phases: 1) ISCO in North Area (Phase I) and 2) ISCO in South Area (Phase II).

2.) Phase I: Installation of two horizontal extaction wells in the north-to-south periphery of the North Area. The two horizontal extraction wells will be used in conjunction with existing vertical injection wells to recirculate alkaline activated sodium persulfate within the DNAPL area. Installation of 8 groundwater monitoring wells (4 each in both the north and south areas).

3.) Phase II: Two horizontal extraction wells and one horizontal injection well will be installed within the South Area (underneath the magazine storage areas), and a second phase recirculation event will be performed. Implementation of Phase II may not be necessary if the Phase I baseline sampling results indicate that the contaminant mass within the South Area may be amenable to MNA.

4.) Sampling of GW in 22 monitoring wells (8 new wells [IS47MW25 -IS47MW32]; 14 existing wells [IS47MW01 through IS47MW06, IS47MW10, IS47MW12, IS47MW19 through IS47MW24]) for VOCs, field parameter (DO, pH, temp, specific conductance, ORP), un/filtered metals, & H2O quality parameters (sulfate, chloride, nitrate, & alkalinity), MEE, PLFA, and QPCR (natural attenuation indicators) during baseline event & 2- and 6-month post-injection even for each Phase. Soil sampled to determine VOC concentration at 8 sample locations (4 samples per location) within the North and South Areas during baseline and 6 month post-injection events during each Phase to determine remediation effectiveness.

5.) EC profiling at 8 locations immediately after injection during each Phase.

6.) Injection wells monitored during injection events to determine flow rate and pressure, allowing for determination of oxidant mass. Sampling of GW for field parameters (DO, pH, temp, specific conductance, ORP) to evaluate geochemical indicators and system efficiency. Analyze GW for persulfate indicator and continous conductivity profile to determine oxidant distribution.

7.) Groundwater would be monitored quarterly during Years 1 through 3, and annually during Years 4 through 52. Samples collected from 8 new wells (IS47MW25 -IS47MW32), 14 existing wells (IS47MW01 through IS47MW06, IS47MW10, IS47MW12, IS47MW19 through IS47MW24). All groundwater samples would be analyzed for VOCs, un/filtered metals, MEE, alkalinity, nitrate, chloride, sulfate. In addition field measurements such as DO, ORP, pH, specific conductance, and temperature would also be collected.

8.) Data interpretation and report would be prepared following a sampling event.

9.) Five-year review and a site closure report

REMEDIAL ALTERNATIVE 2	Media	LOCATION:	Construction time:	17 weeks
Source Area Treatment Using ISCO, MNA, and ICs	Shallow Groundwater	Site 47 Mercuric Nitrate Disposal Area	Operation time:	52 years
		NSF-IH, Indian Head, Maryland	Post Remediation Monitoring:	included in the operation time

PRESENT WORTH CALCULATION

Discount Rate: 5.2% **O&M and Period Cost Contingency:** 20%

Year	Real Cost Incurred	Cost Description	Cost Type	Discount Factor	Present Worth
0	$2,707,474	Baseline (soil & groundwater sampling), Phase I ISCO, 2- and 6-Month Post-Injection Sampling Events, Rebaseline event, Phase II ISCO, 2- and 6-Month Post-Injection Sampling Events	Capital	1.00	$2,707,474
1	$220,306	Quarterly sampling events (4)	O&M	1.05	$209,416
2	$220,306	Quarterly sampling events (4)	O&M	1.11	$199,065
3	$220,306	Quarterly sampling events (4)	O&M	1.16	$189,225
4	$55,076	Annual sampling event	O&M	1.22	$44,968
5	$62,076	Annual sampling event and five-year review	O&M, Periodic	1.29	$48,178
6	$55,076	Annual sampling event	O&M	1.36	$40,632
7	$55,076	Annual sampling event	O&M	1.43	$38,624
8	$55,076	Annual sampling event	O&M	1.50	$36,715
9	$55,076	Annual sampling event	O&M	1.58	$34,900
10	$62,076	Annual sampling event and five-year review	O&M, Periodic	1.66	$37,391
11	$55,076	Annual sampling event	O&M	1.75	$31,535
12	$55,076	Annual sampling event	O&M	1.84	$29,976
13	$55,076	Annual sampling event	O&M	1.93	$28,495
14	$55,076	Annual sampling event	O&M	2.03	$27,086
15	$62,076	Annual sampling event and five-year review	O&M, Periodic	2.14	$29,020
16	$55,076	Annual sampling event	O&M	2.25	$24,475
17	$55,076	Annual sampling event	O&M	2.37	$23,265
18	$55,076	Annual sampling event	O&M	2.49	$22,115
19	$55,076	Annual sampling event	O&M	2.62	$21,022
20	$62,076	Annual sampling event and five-year review	O&M, Periodic	2.76	$22,522
21	$55,076	Annual sampling event	O&M	2.90	$18,995
22	$55,076	Annual sampling event	O&M	3.05	$18,056
23	$55,076	Annual sampling event	O&M	3.21	$17,163
24	$55,076	Annual sampling event	O&M	3.38	$16,315
25	$62,076	Annual sampling event and five-year review	O&M, Periodic	3.55	$17,480
26	$55,076	Annual sampling event	O&M	3.74	$14,742
27	$55,076	Annual sampling event	O&M	3.93	$14,013
28	$55,076	Annual sampling event	O&M	4.13	$13,321
29	$55,076	Annual sampling event	O&M	4.35	$12,662
30	$62,076	Annual sampling event and five-year review	O&M, Periodic	4.58	$13,566
31	$55,076	Annual sampling event	O&M	4.81	$11,441
32	$55,076	Annual sampling event	O&M	5.06	$10,876

REMEDIAL ALTERNATIVE 2	Media	LOCATION:	Construction time:	17 weeks
Source Area Treatment Using ISCO, MNA, and ICs	Shallow Groundwater	Site 47 Mercuric Nitrate Disposal Area	Operation time:	52 years
		NSF-IH, Indian Head, Maryland	Post Remediation Monitoring:	included in the operation time

PRESENT WORTH CALCULATION

Discount Rate: 5.2% **O&M and Period Cost Contingency:** 20%

Year	Real Cost Incurred	Cost Description	Cost Type	Discount Factor	Present Worth
33	$55,076	Annual sampling event	O&M	5.33	$10,338
34	$55,076	Annual sampling event	O&M	5.60	$9,827
35	$62,076	Annual sampling event and five-year review	O&M, Periodic	5.90	$10,529
36	$55,076	Annual sampling event	O&M	6.20	$8,880
37	$55,076	Annual sampling event	O&M	6.53	$8,441
38	$55,076	Annual sampling event	O&M	6.86	$8,024
39	$55,076	Annual sampling event	O&M	7.22	$7,627
40	$62,076	Annual sampling event and five-year review	O&M, Periodic	7.60	$8,171
41	$55,076	Annual sampling event	O&M	7.99	$6,892
42	$55,076	Annual sampling event	O&M	8.41	$6,551
43	$55,076	Annual sampling event	O&M	8.84	$6,227
44	$55,076	Annual sampling event	O&M	9.30	$5,919
45	$62,076	Annual sampling event and five-year review	O&M, Periodic	9.79	$6,342
46	$55,076	Annual sampling event	O&M	10.30	$5,349
47	$55,076	Annual sampling event	O&M	10.83	$5,084
48	$55,076	Annual sampling event	O&M	11.40	$4,833
49	$55,076	Annual sampling event	O&M	11.99	$4,594
50	$62,076	Annual groundwater sampling, and five-year review	O&M, Periodic	12.61	$4,922
51	$55,076	Annual sampling event	O&M	13.27	$4,151
52	$87,076	Annual sampling evebt, five-year review, and site closure	O&M, Periodic, Site Closure	13.96	$6,239
CAPITAL COST	**$2,707,474**				
2011 Dollar LIFETIME O&M	**$3,461,663**		**Lifetime Present Worth O&M**		**$1,456,192**
TOTAL IMPLEMENTATION COST	**$6,169,137**		**TOTAL PRESENT WORTH**		**$4,163,667**

Supplemental Cost Backup

REMEDIATION ACTIVITIES

1. INSTALLATION OF MONITORING WELLS

Average of Selected BOA Firms for Direct Push Injection Point Installation - Subcontractor				
Description	**Units**	**MD/DC area**	**Qty**	**Site 47**
Mobilization/Demobilization of Direct Push Rig	lump sum	$ 487	1	$ 487
1" Monitoring Well Construction				
Daily rate w/ steam decon	day	$ 1,450	1	$ 1,450
1-inch Schedule 40 PVC well riser	per foot	$ 5	10	$ 50
1-inch Schedule 40 PVC pre-packed well screen				
10-foot length	each	$ 187	1	$ 187
Well development	per hour	$ 77	2	$ 154
Well head completion materials	each	$ 150	1	$ 150
Concrete and bollard	each	$ 105	1	$ 105
Miscellaneous				
Per Diem (Direct Push only)	per day	$ 120	1	$ 120
Temporary Decon Pad	each	$ 163	1	$ 163
DOT 55-gallon Steel Drums	each	$ 56	6	$ 338
IDW Handling	per hour	$ 83	6	$ 498
				$ 3,702

Wellhead completion includes installation of protective casing or flush mount cover (as specified) and 24" x 24" x 6" concrete pad

2. INSTALLATION OF HORIZONTAL EXTRACTION WELLS (PHASE 1, NORTH AREA, HEW-01 AND HEW-02)

Description of Service/Items	Unit	Quantity	Unit Prices	Total
Mobilization				
Mobilization for Washington D.C/Maryland Area				
Directional Drilling Rig and Support Vehicles (Including Recycler)	lump sum	1	$12,000.00	$ 12,000.00
Directional Drilling (Mud Rotary)				
Drilling (HEW- 1)	per foot	180	$130.00	$ 23,400.00
Drilling (HEW- 2)	per foot	280	$130.00	$ 36,400.00
Well Materials (Sch 80 Slotted Pipe)	per foot	200	$18.00	$ 3,600.00
Well Materials (Sch 80 Casing)	per foot	260	$12.00	$ 3,120.00
Well Development and Surface Grout Seal	per well	2	$3,500.00	$ 7,000.00
RDW Management	LS	1	$9,500.00	$ 9,500.00
Subcontractor Project Management	LS	1	$12,000.00	$ 12,000.00
Water Tanker, Excavator, and Misc Equipment	LS	1	$5,000.00	$ 5,000.00
Wellheads (24" X 60" Subgrade Vaults w/ Spring Assist Covers)	each	2	$2,800.00	$ 5,600.00
TOTAL ESTIMATED SUBCONTRACTOR COST				**$ 117,620.00**

3. INSTALLATION OF HORIZONTAL INJECTION AND EXTRACTION WELLS (PHASE 2, SOUTH AREA, HEW-03, HIW-01, AND HEW-04)

Description of Service/Items	Unit	Quantity	Unit Prices	Total
Mobilization				
Mobilization for Washington D.C/Maryland Area				
Directional Drilling Rig and Support Vehicles (Including Recycler)	lump sum	1	$12,000.00	$ 12,000.00
Directional Drilling (Mud Rotary)				
Drilling (HEW- 3)	per foot	200	$130.00	$ 26,000.00
Drilling (HIW- 1)	per foot	200	$130.00	$ 26,000.00
Drilling (HEW- 4)	per foot	200	$130.00	$ 26,000.00
Well Materials (Sch 80 Slotted Pipe)	per foot	360	$130.00	$ 46,800.00
Well Materials (Sch 80 Casing)	per foot	240	$130.00	$ 31,200.00
Well Development and Surface Grout Seal	per well	3	$3,500.00	$ 10,500.00
RDW Management	LS	1	$14,000.00	$ 14,000.00
Subcontractor Project Management	LS	1	$8,500.00	$ 8,500.00
Slot Design for Injection Well	LS	1	$6,500.00	$ 6,500.00
Water Tanker, Excavator, and Misc Equipment	LS	1	$5,000.00	$ 5,000.00
Wellheads (24" X 60" Subgrade Vaults w/ Spring Assist Covers)	each	3	$2,800.00	$ 8,400.00
TOTAL ESTIMATED SUBCONTRACTOR COST				**$ 220,900.00**

4. ISCO PERSULFATE INJECTION - Subcontract

Phase I Injection					
Description of Service/Items	**Unit**	**Quantity**	**Unit Price**	**Total**	
Work Plan & Project Coordination	ea	2	$20,000.00	$40,000.00	
Meetings	ls	1	$5,700.00	$5,700.00	
Site Visits	ea	2	$3,900.00	$7,800.00	
Phase I					
Material - Persulfate	lbs	67,000	$1.22	$81,740.00	
Material Sodium hydroxide	lbs	56,350	$1.05	$59,167.50	
Oxidant Injection - Injection Manifold System used for all	wks	5	$6,500.00	$32,500.00	Very high for manifold system - Avg. around $3,000 for large truck with manifold.
Injection Labor	hours	900	$100.00	$90,000.00	high avg. labor rate for field staff ($75 is avg.)
Perdiem&Lodging	day	75	$112.00	$8,400.00	
TOTAL ESTIMATED SUBCONTRACTOR COST				**$325,307.50**	

Phase II Injection					
Description of Service/Items	**Unit**	**Quantity**	**Unit Price**	**Total**	
Work Plan & Project Coordination	ea	2	$20,000.00	$40,000.00	
Meetings	ls	1	$5,700.00	$5,700.00	
Site Visits	ea	2	$3,900.00	$7,800.00	
Phase II					
Persulfate	lbs	67,000	$1.22	$81,740.00	
Sodium Hydroxide	lbs	56,350	$1.05	$59,167.50	
Oxidant Injection - Injection Manifold System used for all	wks	5	$6,500.00	$32,500.00	Very high for manifold system - Avg. around $3,000 for large truck with manifold.
Injection Labor	hours	900	$100.00	$90,000.00	high avg. labor rate for field staff ($75 is avg.)
Perdiem&Lodging	day	75	$112.00	$8,400.00	
TOTAL ESTIMATED SUBCONTRACTOR COST				**$325,307.50**	